PURSUANT TO A.R.S. §38-431.01, THE GILA COUNTY BOARD OF SUPERVISORS WILL HOLD A MEETING AT THE GILA COUNTY COURTHOUSE, BOARD OF SUPERVISORS' HEARING ROOM, 1400 EAST ASH STREET, GLOBE, ARIZONA. ONE OR MORE BOARD MEMBERS MAY PARTICIPATE IN THE MEETING BY TELEPHONE CONFERENCE CALL OR BY INTERACTIVE TELEVISION VIDEO (ITV). THE MEETING IS ALSO TELEVISED TO THE GILA COUNTY COMPLEX, BOARD OF SUPERVISORS' CONFERENCE ROOM, 610 E. HIGHWAY 260, PAYSON, ARIZONA.

NOTE: Per the most recent guidelines from the federal government regarding COVID-19 and to protect citizens, no citizens will be allowed in the Board of Supervisors' hearing room at the Globe Courthouse or at the County Complex, Board of Supervisors' conference room in Payson. The only exception to this statement is for public hearings. Citizens may attend the public hearing in person, one at a time, in Globe or in Payson to provide comments. A face mask must be worn while in the building; however, it may be removed while addressing the Board of Supervisors.

Citizens may watch the Board meeting live-streamed at:
https://www.youtube.com/channel/UCkCHWVqrI5AmJKbvYbO-k2A/live

Citizens may submit written comments related to the October 6th Regular Meeting agenda by no later than 5 p.m. on Monday, October 5th, by emailing to the Clerk of the Board at msheppard@gilacountyaz.gov or calling 928-402-8757. Citizens may also submit written comments during the meeting through YouTube. Please include the meeting date, agenda item number, your name and residence address in the email.

REGULAR MEETING - TUESDAY, OCTOBER 6, 2020 - 10:00 A.M. REVISED

1. **CALL TO ORDER - PLEDGE OF ALLEGIANCE - INVOCATION**

2. **PRESENTATIONS:**

   A. Presentation and final report for the 2020 Summer Work Employment Program. **(Cathy Melvin)**

   B. Presentation regarding Gila County financial data as of 6/30/2020 as it compares to the fiscal year 2020 Gila County Budget and fiscal year 2019 year-to-date performance. **(Maryn Belling)**

3. **PUBLIC HEARINGS:**

A. Information/Discussion/Action to adopt Resolution No. 20-10-01 to name E. Campbell Road and N. Helens Way in the Tonto Basin area. **(Tom Homan)**

4. **REGULAR AGENDA ITEMS:**

A. Information/Discussion/Action to adopt Resolution No. 20-10-07 declaring Gila County as a Constitution Preservation County. **(Woody Cline)**

B. Information/Discussion/Action to approve Amendment No. 2 to an Intergovernmental Agreement (Contract No. ADHS18-177678) between Gila County and the Arizona Department of Health Services to replace the Price Sheet which includes funding for an additional $77,500 as needed through June 30, 2021, and to revise the Scope of Work. **(Michael O'Driscoll/Paula Horn)**

C. Information/Discussion/Action to award a contract to Kimley-Horn in the amount of $50,000 in response to Request for Proposals No. 071320- *Master Broadband Plan Phase 2*, and authorize the Chairman's signature on the award contract. **(Homero Vela)**

D. Information/Discussion/Action to adopt Resolution No. 20-10-04 agreeing for Gila County to be the pass-through entity on behalf of Hellsgate Fire District (District) for a grant award to the District by the Gila River Indian Community in the amount of $49,507 to be used for the District's Critical Breathing Air Compressor Project. **(Mary Springer/John Wisner)**

E. Information/Discussion/Action to approve the continued use of Sourcewell Cooperative Purchasing Agreement No. 022217-AAC on a Customer Purchase Agreement in the amount of $48,013.54 between Gila County and Agile Access Control, Inc. for an additional year, November 1, 2020 to October 31, 2021. **(Steve Sanders)**

F. Information/Discussion/Action to approve the use of Sourcewell Cooperative Purchasing Agreement No. 052417-CFC with Crafco, Inc. for the purchase of a new Autoloader SS125DC Crack Seal Machine in the amount of $87,160.33. **(Steve Sanders)**

G. Information/Discussion/Action to authorize advertisement of Invitation for Bids Number 091120-*Rim Trail Bridge Replacement Project (Structure No. 07881).* **(Steve Sanders)**

H. Information/Discussion/Action to approve a Lease Agreement with the Payson Unified School District for the facility located at 501 S. McLane Road, Payson, Arizona whereby the County will lease space for its Gila Employment and Special Training Program beginning July 1, 2020 through June 30, 2021. **(Mary Springer)**

I. Information/Discussion/Action to certify the collection amounts for the Superior Court, Payson Regional Justice Court, and Globe Regional Justice Court as presented for FY 2019-2020. **(Mary Springer)**

J. Information/Discussion to review draft Policy No. BOS-FIN-118-*Public Safety Personnel Retirement System Contingency Reserve Funding*. **(Mary Springer)**

5. **CONSENT AGENDA ACTION ITEMS: (Any matter on the Consent Agenda will be removed from the Consent Agenda and discussed and voted upon as a regular agenda item upon the request of any member of the Board of Supervisors.)**

A. Approval of FY 2021 Victims' Rights Program Award Agreement No. AG No. 2021-004 between the Gila County Attorney's Office and the Arizona Attorney General's Office in the amount of $23,300 to cover the existing salary and employee-related expenses for a full-time advocate for the period July 1, 2020, through June 30, 2021.

B. Approval of Arizona Criminal Justice Commission FY 2021 Victim Compensation Program Grant Agreement No. VC-21-052 in the amount of $53,189 for the period of July 1, 2020 to June 30, 2021.

C. Approval of Extension of Intergovernmental Agreement-Restoration to Competency Services that is between Yavapai County and Gila County for one year (July 1, 2020, to June 30, 2021) with the option for two one-year renewals upon mutual agreement of both counties.

D. Adoption of Resolution No. 20-10-03 which authorizes the execution of Amendment No. Two to an Intergovernmental Agreement (IGA/JPA 16-0005917-I) between Gila County and the State of Arizona, Department of Transportation, for an additional $26,992 for the scoping, design, and project development administration cost associated with the Golden Hill Sidewalk Project between Globe and Miami, AZ.

E. Adoption of Resolution No. 20-10-02 authorizing the disposal of a portion of New Street (as shown on the Miami Map No. 2 GCR Map 23, Gila County Records, Gila County, AZ), and authorizing the Board of Supervisors' Chairman to execute and deliver in the name and under the seal of the County of Gila, a Quit Claim Deed conveying said portion of New Street to Freeport-McMoRan Miami Inc.

F. Adoption of Resolution No. 20-10-06 designating emergency voting centers for the November 3, 2020 General Election.

G. Adoption of an Order designating polling places and the appointment of poll workers and election board workers for the purpose of conducting the November 3, 2020 General Election.

H. Authorization of the Chairman's signature on the Quit Claim Deed for the Clerk of the Board's over-the-counter sale of Assessor's tax parcel number 206-10-001 to Abelardo Andre Gil.

I. Authorization of the Chairman's signature on the Quit Claim Deed for the Clerk of the Board's over-the-counter sale of Assessor's tax parcel number 101-07-188 to Corey Lee Busboom.

J. Approval of the Board of Supervisors' September 15, 2020 and September 22, 2020 meeting minutes.

K. Acknowledgment of the August 2020 monthly activity report submitted by the Globe Regional Constable's Office.

L. Acknowledgment of the August 2020 monthly activity report submitted by the Payson Regional Constable's Office.

M. Acknowledgment of the August 2020 monthly activity report submitted by the Clerk of the Superior Court's Office.

N. Acknowledgment of the August 2020 monthly activity report submitted by the Globe Regional Justice of the Peace's Office.

O. Acknowledgement of the August 2020 monthly activity report submitted by the Payson Regional Justice of the Peace's Office.

P. Acknowledgment of the August 2020 monthly activity report submitted by the Recorder's Office.

6. **CALL TO THE PUBLIC:** A call to the public is held for public benefit to allow individuals to address the Board of Supervisors on any issue within the jurisdiction of the Board of Supervisors. Board members may not discuss items that are not specifically identified on the agenda. Therefore, pursuant to Arizona Revised Statute §38-431.01(H), at the conclusion of an open call to the public, individual members of the Board of Supervisors may respond to criticism made by those who have addressed the Board, may ask staff to review a matter or may ask that a matter be put on a future agenda for further discussion and decision at a future date.

7. **EXECUTIVE SESSION ITEMS:**

A. Information/Discussion/Action: Vote to go into executive session pursuant to A.R.S. § 38-431.03(A)(3) and (4) to discuss settlement negotiations in multi-district opioid litigation. **(Jefferson Dalton)**

8. At any time during this meeting pursuant to A.R.S. §38-431.02(K), members of the Board of Supervisors and the County Manager may present a brief summary of current events. No action may be taken on information presented.

IF SPECIAL ACCOMMODATIONS ARE NEEDED, PLEASE CONTACT THE RECEPTIONIST AT (928) 425-3231 AS EARLY AS POSSIBLE TO ARRANGE THE ACCOMMODATIONS. FOR TTY, PLEASE DIAL 7-1-1 TO REACH THE ARIZONA RELAY SERVICE AND ASK THE OPERATOR TO CONNECT YOU TO (928) 425-3231.

THE BOARD MAY VOTE TO HOLD AN EXECUTIVE SESSION FOR THE PURPOSE OF OBTAINING LEGAL ADVICE FROM THE BOARD'S ATTORNEY ON ANY MATTER LISTED ON THE AGENDA PURSUANT TO A.R.S. §38-431.03(A)(3).

THE ORDER OR DELETION OF ANY ITEM ON THIS AGENDA IS SUBJECT TO MODIFICATION AT THE MEETING.

ARF-6283 **Presentation** **2. A.**

Regular BOS Meeting

Meeting Date: 10/06/2020
Submitted For: Woody Cline, Member, Board of Supervisors
Submitted By: Cathy Melvin, Executive Assistant
Department: Board of Supervisors-District 3

Information

Request/Subject

Final Report for the 2020 Summer Work Employment Program.

Background Information

The Gila County Summer Work Employment Program had another successful summer that included participation with cities, towns, and county departments.

Evaluation

Cathy Melvin, Executive Administrative Assistant, District III, will provide a final report to the Board of Supervisors regarding the 2020 Summer Work Employment Program.

Conclusion

It would be beneficial for the Board of Supervisors to receive this information.

Recommendation

N/A

Suggested Motion

Presentation and final report for the 2020 Summer Work Employment Program. **(Cathy Melvin)**

Attachments

Summer Work Program Presentation

YCC Conservation Corp Report

NACO Achievment Award

GILA COUNTY SUMMER WORK PROGRAM 2020

THE SUMMER THAT ALMOST WASN’T…

THE BASICS

- PROGRAM DATES: JUNE 8 TO JULY 17
- WAGES $12 PER HOUR (MINIMUM WAGE)
- 40 HOURS PER WEEK FOR SIX WEEKS
- COUNTY RECEIVED 76 APPLICATIONS
- 33 POSITIONS AVAILABLE (4 LESS THAN LAST YEAR)
- NOTE: A BETTER RESPONSE IN THE NORTHERN AREA
- WE WERE ABLE TO FUND AN ADDITIONAL 2 WORKERS IN HAYDEN, WINKELMAN AND MIAMI (PAID FOR BY BOS)

THE PROCESS

- INTERVIEWS WERE HELD AT THE END OF MAY
- ALL APPLICANTS WERE INTERVIEWED
- INTERVIEWS WERE HELD IN GLOBE, PAYSON AND THE HAYDEN/WINKELMAN AREA
- PAYSON STAFF AND MIAMI STAFF OBSERVED INTERVIEWS AND PARTICIPATED IN THE SELECTION OF THE WORKERS
- INTERVIEWS WERE ALSO HELD BY PHONE

PARTICIPATING DEPARTMENTS AND MUNICIPALITIES

PARTICIPATING COUNTY DEPARTMENTS

- HEALTH DEPARTMENT
- COMMUNITY DEVELOPMENT
- FACILITIES
- SHERIFF'S OFFICE
- ELECTIONS
- PUBLIC FIDUCIARY
- COUNTY ATTORNEY
- BOARD OF SUPERVISORS
- INFORMATION TECHNOLOGY

PARTICIPATING MUNICIPALITIES

- CITY OF GLOBE
- TOWN OF MIAMI
- TOWN OF PAYSON
- TOWN OF WINKELMAN
- TOWN OF HAYDEN
- TOTAL INVESTMENT MADE BY COUNTY GENERAL FUND, BOARD OF SUPERVISORS AND COMMUNITIES $131,328

COMMENTS
PROJECTS

- COMMUNITY DEVELOPMENT: “BEST ART TIME WORKER EVER!”
- ELECTIONS: “THE WORKERS GOT A OT OF PROJECTS COMPLETED FOR US ND IT WAS HARD TO KEEP UP WITH HEM.”
- CITY OF GLOBE: A BEAUTIFUL MURAL VAS PAINTED AT THE GLOBE LIBRARY.
- BOARD OF SUPERVISORS: “REALLY OOD, DEPENDABLE HELP. SHE ATEGORIZED FILES AND ORGANIZED.”

COVID 19 EFFECTS

- ORIENTATION WAS PROVIDED BY EACH GOVERNMENT ENTITY.
- GILA COUNTY PROVIDED ORIENTATION FOR COUNTY WORKERS.
- UNABLE TO PROVIDE SOFT SKILLS TRAINING.
- WE CHOSE NOT TO HOLD OUR ANNUAL WORKSHOP.
- ALL OF THE ADULT SUPERVISORS DID A REALLY GOOD JOB OF PROVIDING INFORMATION TO THE WORKERS REGARDING WEARING MASKS AND THE NECESSARY PRECAUTIONS.

T-SHIRT GIVEAWAY

THIS YEAR FOR THE FIRST TIME, T-SHIRTS WERE GIVEN TO EACH PARTICIPANT IN THE PROGRAM.

YOUTH CONSERVATION CORP (YCC)

- THE COUNTY PARTNERED WITH THE TONTO NATIONAL FOREST ON A GRANT APPLICATION TO ESTABLISH A YCC CREW IN THE NORTHERN PART OF THE COUNTY.
- A CREW OF FOUR WORKERS AND TWO CREW LEADERS WORKED ON PROJECTS ON THE TONTO NATIONAL FOREST IN PAYSON AND TONTO BASIN.
- PROJECTS INCLUDED WILDLIFE SURVEYS, WILDERNESS MONITORING, CULTURAL SITE MAINTENANCE, AND HYDROLOGY.
- THE REVIEWS FROM EVERYONE INVOLVED WERE VERY POSITIVE.
- A NEW APPLICATION IS BEING PREPARED FOR NEXT SUMMER AND GILA COUNTY HAS PLEDGED TO PARTNER AGAIN.

GILA COUNTY SUMMER WORK PROGRAM 2020
PASSING ON

NACO ACHIEVMENT AWARD

- EACH YEAR NACO HAS A PROGRAM WHERE COUNTIES CAN SUBMIT INNOVATIVE PROJECTS THAT THEIR COUNTY HAS IMPLEMENTED. THERE'S A WIDE RANGE OF AND AN APPLICATION WAS SUBMITTED UNDER THE CATEGORY OF "COMMUNITY AND ECONOMIC DEVELOPMENT" FOR THE SUMMER WORK PROGRAM.
- WHAT MAKES THE GILA COUNTY PROGRAM UNIQUE, IS THE FACT THAT THE WORKERS PLACED IN CITIES AND TOWNS ARE FUNDED BY THE COUNTY.
- UNFORTUNATELY, THE ANNUAL CONFERENCE WAS CANCELLED AND OUR AWARD WAS RECEVED BY MAIL!

Youth Conservation Corps Immersion Program- Payson, AZ

The Youth Conservation Corps (YCC) Immersion project was an innovative pilot project coordinated through the Arizona Conservation Corps (AZCC), Gila County Supervisor Woody Cline, and Tonto National Forest. The project was funded through Gila County and the 21st Century Conservation Service Corps (21CSC), an organization that engages youth and veterans across the country to work on public lands, waterways, and cultural heritage sites.

The Crew:

This particular crew was made up of local high school seniors and two specially trained AZCC leaders. The crew spent 6 weeks completing educational work projects on the Tonto National Forest alongside forest staff, specialists, and partners. These projects were specially designed to provide insight into various career opportunities with public lands and partners as well as a non-traditional crew experience. Some of these projects included wildlife surveys, wilderness monitoring, cultural site maintenance, and hydrology.

The crew earned 300 hours toward AmeriCorps scholarships which can be used to help pursue educational and career based knowledge, training, and courses. The crew enjoyed their time on the forest and built lasting relationships with one another and staff.

The crew posing in front of vehicles wearing masks, uniforms, and PPE

Five star reviews:

Here is what one member had to say about the experience, “The six weeks I spent with AZCC on the Tonto Youth Crew was the best job I’ve had so far. As a soon-to-be high school graduate, I’ve been

worried about what I can do to get started on my career and how I can learn more about land management. This was an amazing opportunity, not only for its access to conservation professionals in the US Forest Service and other organizations that were very willing to answer my questions, but also the amount of beautiful Arizona scenery and wildlife I was able to witness (including a black bear!). Sometimes the work was intense, but it made it well worth it knowing that everything we did helped keep public lands safe and healthy. I would highly recommend this job to anyone interested in land management, wildlife management, or just working hard with a tight-knit team."

More about the projects:

Week 1: Shoofly Ruins restoration with Friends of Tonto National Forest and Tonto Heritage program- large amounts of brushing, invasive species removal, improving drainage, and more was accomplished making for some great before and after photos!

Week 2: Wet/Dry mapping with Tonto Hydrology program- The crew spent the week checking various streams and reaches in order to record what is flowing during dry season. This mapping data was collected pre-monsoon season and will be very valuable to the hydrology team.

Week 3: Seeding & sign painting with Tonto Fire and Biology programs- It is important for seeding to occur prior to monsoon season. The crew planted Native Blue Grama grass. The crew also spent several days painting forest signage which is greatly affected by the heat, snow, and elements.

Week 4: Wildlife Surveys with Tonto Biology program- They crew used maps, the ARC GIS collector app, and basic GIS skills to survey various areas to record wildlife sightings and collect data.

Week 5: Spring repair & recreation site rehabilitation with Tonto Range program- The crew joined the Tonto Basin Range staff for a week of intense outdoor labor in difficult to reach areas of the forest. They dug up a spring that was covered by mud as a result of the Woodbury fire last year since livestock and wildlife heavily depend on these springs.

Week 6: Wilderness monitoring with Arizona Wilderness Coalition (AWC)- The crew assisted AWC with wilderness monitoring and some trail work in the Hellsgate Wilderness area. Monitoring and the data collected is provided to the forest to meet annual monitoring requirements.

Before and after of a cleared out room at Shoofly Ruins

Thank you to the crew and all of our staff and partners! We are excited to continue and expand this program and opportunities on the Tonto.

July 13, 2020

Ms. Cathy Melvin
1400 E Ash St
Globe, AZ 0

Dear Ms. Cathy Melvin,

The National Association of Counties (NACo) is pleased to grant Gila County a 2020 Achievement Award for its program titled "Gila County Summer Work" in the category of Community and Economic Development.

Congratulations to everyone involved in developing this innovative program! Your hard work will yield positive results for Gila County residents.

2020 NACo Annual Conference

In light of the coronavirus (COVID-19) pandemic and after much thoughtful discussion, including concerns about large gatherings, the National Association of Counties (NACo) Board of Directors made the difficult decision to cancel the 2020 NACo Annual Conference and Exposition and proceed with a virtual Annual Business Meeting and Town Hall.

Unfortunately, there will not be an in-person Achievement Awards Luncheon this year. We will, however, list award-winning programs on NACo.org and encourage you to celebrate your award-winning achievements locally.

Congratulations and thank you for your continued work to promote the betterment of county services and programs. We hope your county is staying safe and healthy.

Thanks,

Lindsey Maggard
Senior Public Affairs Coordinator
National Association of Counties (NACo)
P: (202) 661-8824
lmaggard@naco.org

ARF-6252 **Presentation** **2. B.**

Regular BOS Meeting

Meeting Date: 10/06/2020
Submitted For: Mary Springer, Finance Director
Submitted By: Maryn Belling, Budget Manager
Department: Finance

Information

Request/Subject

Presentation of Gila County financial data as it compares to the fiscal year 2020 Gila County Budget and fiscal year 2019 year-to-date performance.

Background Information

At the request of Chairman Cline and the other members of the Gila County Board of Supervisors, the Finance Department has analyzed the year-to-date performance of both revenues and expenditures as compared to the 2020 Fiscal Year Budget. This report contains General Fund fiscal data as of June 30, 2020.

Throughout the year, the Finance Department prepares reports to compare Gila County's income and expenses to the adopted budget. This information is provided for both the Board of Supervisors and the general public to strengthen our communication and transparency efforts. We welcome feedback to improve the usefulness of the information. As we continue to make improvements in software compatibility, we anticipate being able to provide more timely data comparisons.

In addition, at the request of Chairman Cline and Member Supervisors Humphrey and Martin, we have included these reports for the Fiscal Year 2020 in the Fiscal Year 2021 Budget Book.

Evaluation

Monthly Review Process- Monthly the Budget Manager reviews the Countywide Budget Performance Report for both revenues and expenses. By systematically evaluating each fund for its progress toward annual revenue and expenditure targets, Finance is able to communicate well with departmental leaders and keep notes for improving the preparation of future years' budgets. When extraordinary items arise, or department leaders have concerns about upcoming expenditures or revenues, Finance works with departments and with the County Manager as appropriate to

ameliorate concerns, advocate strategically, and provide insight on past decisions to ensure the vision for the current year's budget remains in focus.

Ongoing Communication- This approach extends beyond monthly Budget Performance Report review and includes: contract request assessments, repair maintenance discussions, and providing full-service communication about where items were budgeted so that we're consistent. In addition, working with departments to understand the timing of reimbursable grant-funded programs allows us to strategically plan for year-end receivables and cash balances.

Conclusion

The targeted % of the annual budget for both revenue and expense is 100% at the end of May 2020.

At 6/30/2020 Gila County's General Fund revenues were 99.32% of the budget.

General Fund expenditures were 93.77% of the budget.

Recommendation

Presentation regarding Gila County financial data as of 6/30/2020 as it compares to the fiscal year 2020 Gila County Budget and fiscal year 2019 year-to-date performance.

Suggested Motion

Presentation regarding Gila County financial data as of 6/30/2020 as it compares to the fiscal year 2020 Gila County Budget and fiscal year 2019 year-to-date performance. **(Maryn Belling)**

Attachments

12 Month YTD Graph

12 Month YTD Narrative

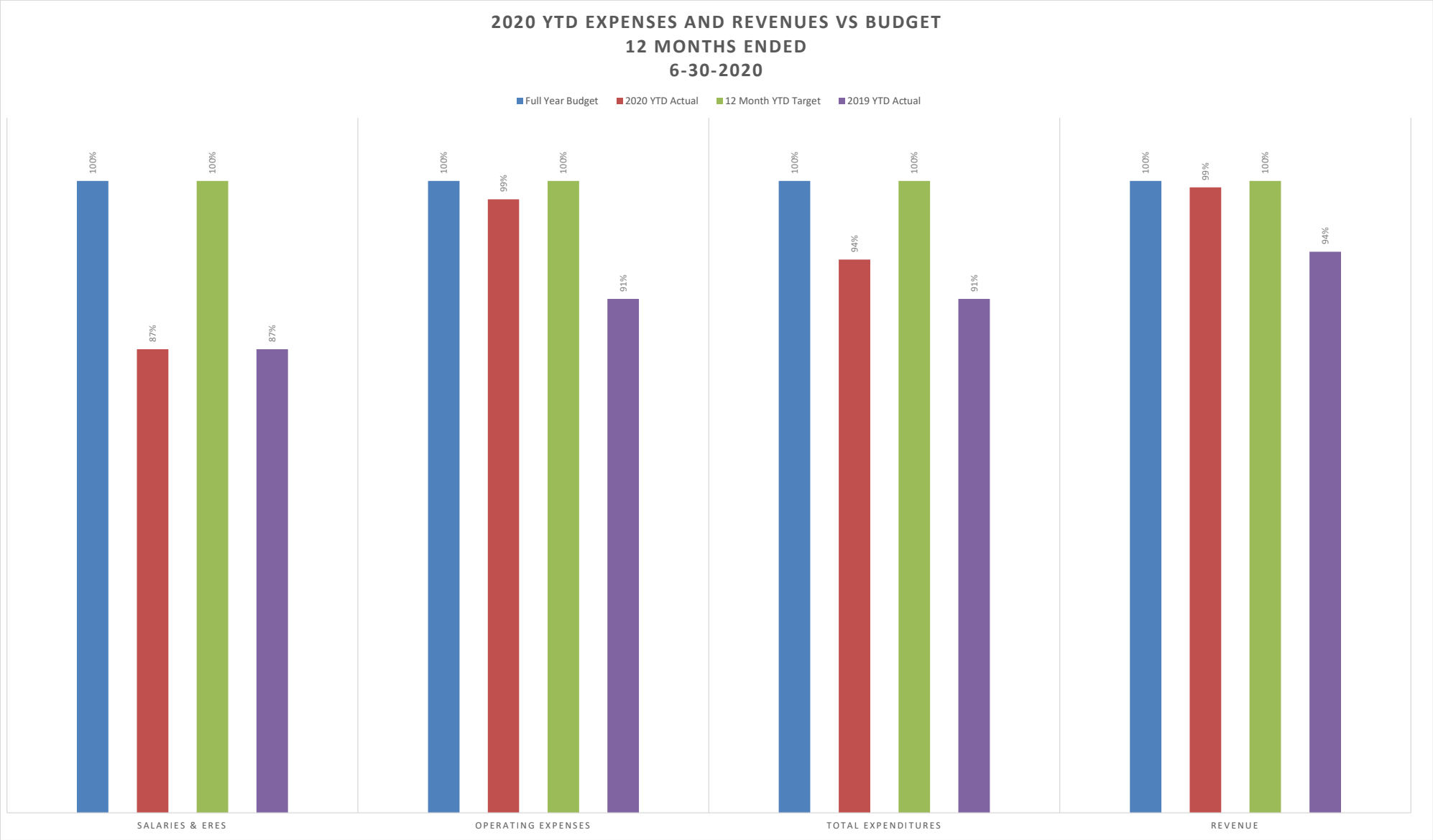
2020 YTD EXPENSES AND REVENUES VS BUDGET
12 MONTHS ENDED
6-30-2020
Full Year Budget
2020 YTD Actual
12 Month YTD Target
2019 YTD Actual
100%
87%
100%
87%
100%
99%
100%
91%
100%
94%
100%
91%
100%
99%
100%
94%
SALARIES & ERES
OPERATING EXPENSES
TOTAL EXPENDITURES
REVENUE

Gila County
Finance Department
Mary Jane Springer, Finance Director
mspringer@gilacountyaz.gov
928-402-8516

At the end of June 2020, Gila County's General Fund Revenues were at 99.32% of annual budget. General Fund Expenditures were at 93.77%. Targeted % of annual budget for both revenue and expense at June 30, 2020 is 100%

General Fund Revenues – General Fund Revenues are $2,1,07,822.68 more than 6/30/2019. The top 6 contributing revenue sources to the increase are:

- 7.73% Property Taxes
- 15.02% Excise Tax
- 23.97% Intergovernmental Agreements
- 17.92% State Shared
- 18.24% Charges for Services
- 1.71% Interest & Penalties on Delinquent Property Taxes

Significant Revenue Categories

- **3010 – Property Taxes – FY20 Collections 89% YTD -** The FY19-20 Property Taxes collections YTD are $20,874,702.45 of $23,419,660 annual budget.
- **3040 – VLT – FY20 Collections 103% YTD -** The FY19-20 VLT collections YTD are $1,944,048.22 of $1,885,031 annual budget.
- **3050 – Excise Tax – FY20 Collections 124% YTD -** The FY19-20 General Fund portion of Excise Tax collections are $3,455,162.58 of $2,790,021 annual budget.
- **3360.10 – State Shared Sales Tax – FY20 Collections 101% -** The FY19-20 State Shared Sales Tax collections are $6,306,698.02 of $6,222,141 annual budget.

General Fund Expenditure – General Fund Expenditures are $1,320,402.63 more than 6/30/2020. These increases are attributable to Liability Insurance (28%), Repairs & Maintenance (12.52%) and Aid to Other Governments (4.45%). An increase of Salaries and Employee Related Expenses netted against a decrease in Professional Services (contract staff) shows an overall increase of 8.62% compared to last year, but still below budget.

Significant Expenditure Categories

- **Salaries, Wages, and Employee Benefits comprise 63.67% of year-to-date expenditures.** Both are below target at 91% and 89% of budget respectively.
- **AHCCCS / ALTCS comprise 11.13% of year-to-date expenditures.** The ALTCS & AHCCCS expense for the year of $4,447,442.01 was $19,738.01 more than budgeted. This is a variance of 0.446%

All other expenditure categories are less than 10% of total expenditures.

ARF-6258 **Public Hearing** **3. A.**

Regular BOS Meeting

Meeting Date: 10/06/2020
Submitted For: Steve Sanders, Director
Submitted By: Tom Homan, GIS Supervisor
Department: Public Works

Information

Request/Subject

Resolution No. 20-10-01 to name a section of road in Tonto Basin as E. Campbell Road and N. Helens Way.

Background Information

The Minor Land Division executed via Record of Survey 5174 (March 2020) in the Tonto Basin area off of State Route 188 has resulted in a new road name request to address the created parcels. By itself this would create an isolated road, so the ingress-egress easement defined in Subdivision Plat 645 (1994) constitutes access to the new properties and needs to be named as well for directional continuity. The property owners have submitted a request to name the road and are consistent in their name that satisfies the 75% threshold of Section 806.A of Gila County Street Naming and Property Numbering Ordinance No. 11-03. The property owners were sent the public notice via registered mail with a dissenting response date of September 22, 2020.

Evaluation

The Plat 645 easement branches off State Route 188 towards the east at approximately Milepost 261.2 and has been in use a common highway access point for the lots defined by the plat. This includes access to the new Tonto Basin Fire Station. This easement extends back to the access easement created under Record of Survey 5174.

Section 804 of the Addressing Ordinance limits similar-sounding names within the same zip code. E. Campbell Road and N. Helens Way are not used elsewhere in Tonto Basin, so the name selection is satisfied. At the County high level, a road named Campbell Avenue can be found in Central Heights and a road named Helen Dr can be found in East Verde Estates so the use of these names should not impact 911 response.

The site plan, area map, Record of Survey, Plat Map, and public notice

are attached.

Conclusion

Naming these roads in Tonto Basin is supported by the Gila County Street Naming and Property Numbering Ordinance No.11-03.

Recommendation

The Public Works Department Director recommends that the Board of Supervisors adopt Resolution No. 20-10-01 naming a road in the Tonto Basin area as E. Campbell Road and N. Helens Way.

Suggested Motion

Information/Discussion/Action to adopt Resolution No. 20-10-01 to name E. Campbell Road and N. Helens Way in the Tonto Basin area. **(Tom Homan)**

Attachments

Resolution No. 20-10-01
Public Notice
Helens Way Petition
Campbell Rd Petition
Location Map
Subdivision Plat 645
Record of Survey 5174

After Recording Please Return to:
Marian Sheppard - BOS

RESOLUTION NO. 20-10-01

A RESOLUTION OF THE BOARD OF SUPERVISORS OF GILA COUNTY, ARIZONA NAMING TWO ROADS IN THE TONTO BASIN AREA, ARIZONA, TO BE CALLED E. CAMPBELL ROAD AND N. HELENS WAY.

WHEREAS, the Gila County Board of Supervisors initially adopted the Gila County Street Naming and Property Numbering Ordinance on April 1, 1991, and last amended it on June 28, 2011; and,

WHEREAS, street names are assigned in order to implement the uniform assignment of property numbers and avoid duplicate names that would hinder emergency services and the safety of Gila County residents; and,

WHEREAS, Article 8, Section 806, of the Street Naming and Property Numbering Ordinance provides guidelines for the naming of existing unnamed streets; and,

WHEREAS, the following street names and locations substantially comply with the provisions of Article 8 of the Ordinance:

E. CAMPBELL ROAD – Section 14 T6N R10E
N. HELENS WAY – Section 14 T6N R10E

NOW, THEREFORE, BE IT RESOLVED that the Gila County Board of Supervisors does officially recognize the street names set forth above to become effective in conjunction with the numbering of properties along said streets and directs the appropriate County departments to incorporate these names uniformly on all maps of Gila County.

PASSED AND ADOPTED this 6th day of October 2020, at Globe, Gila County, Arizona.

Attest: **GILA COUNTY BOARD OF SUPERVISORS**

_____ _____
Marian Sheppard, Clerk of the Board Woody Cline, Chairman

Approved as to form:

_____
The Gila County Attorney's Office

PUBLIC NOTICE

PUBLIC NOTICE IS HEREBY GIVEN that the Gila county Board of Supervisors will hold a public hearing for the naming of two unnamed roads in the Tonto Basin area.

A Minor Land Division (Record of Survey 5174) in the Tonto Basin area off of State Route 188 has resulted in two new road name requests. The Record of Survey 5174 along with the highway ingress-egress route defined in Subdivision Plat 645 constitute access to the new properties. After careful consideration from the Gila County Rural Addressing Department and property owners, E Campbell Road and N Helens Way will be sufficient for naming the particular roads.

To file an objection to the proposed names, residents must file an alternative petition in writing to the Rural Addressing Department by Tuesday, September 22, 2020 at 5:00pm, per Gila County Street Naming Ordinance No. 11-03. Petitions can be obtained through the Rural Addressing Department upon request.

The public hearing to name the road is scheduled for Tuesday, October 6th, 2020 at 10:00 a.m., or thereafter, located at the Gila County Courthouse, 1400 East Ash Street, Globe, AZ.

Inquiries and objections may be directed to:
Tom Homan, GIS/Addressing Supervisor
745 N Rose Mofford Way
Globe, AZ 85501
(928) 402-8597

Proposed Road Names Highlighted

July 17, 2020

Hi Trish,

We are acting on behalf of the residents submitting for a name for a newly approved road.
If you have any questions that I can help you with, please give me a call.

Sincerely,

Deb Morris
J and D Contracting
928.970.0731

5174 A

RECORD OF SURVEY – MINOR LAND DIVISION / PARCEL LINE ADJUSTMENT

OF THOSE PARCELS AS DESCRIBED IN THE INSTRUMENT RECORDED IN WARRANTY DEED 2019–001869, GILA COUNTY RECORDS. LOCATED IN THE SE 1/4 OF THE SW 1/4 OF SECTION 14, TOWNSHIP 6 NORTH, RANGE 10 EAST OF THE GILA & SALT RIVER MERIDIAN, GILA COUNTY, ARIZONA.

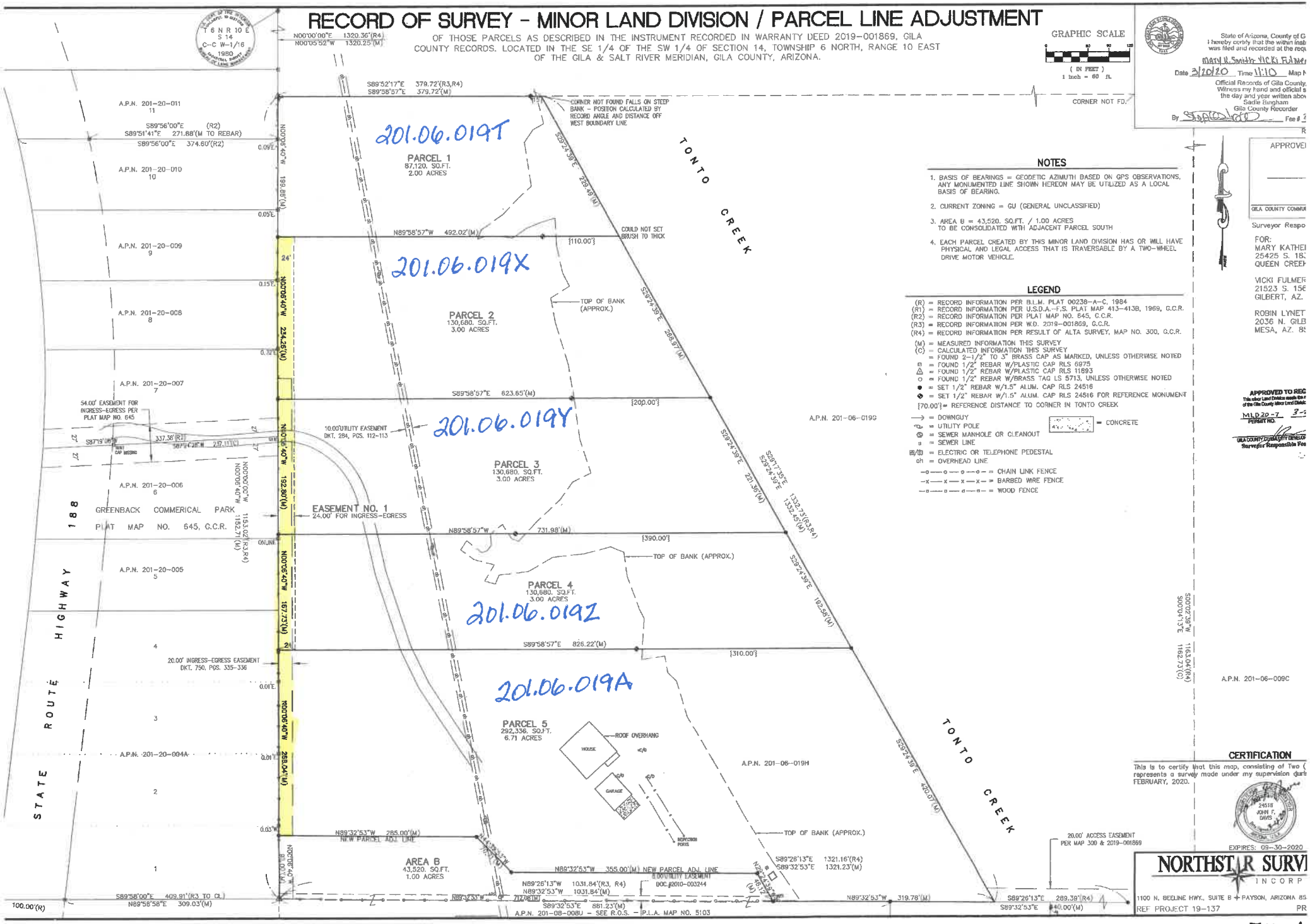

NOTES

1. BASIS OF BEARINGS = GEODETIC AZIMUTH BASED ON GPS OBSERVATIONS, ANY MONUMENTED LINE SHOWN HEREON MAY BE UTILIZED AS A LOCAL BASIS OF BEARING.
2. CURRENT ZONING = GU (GENERAL UNCLASSIFIED)
3. AREA B = 43,520. SQ.FT. / 1.00 ACRES TO BE CONSOLIDATED WITH ADJACENT PARCEL SOUTH
4. EACH PARCEL CREATED BY THIS MINOR LAND DIVISION HAS OR WILL HAVE PHYSICAL AND LEGAL ACCESS THAT IS TRAVERSABLE BY A TWO-WHEEL DRIVE MOTOR VEHICLE.

LEGEND

(R) = RECORD INFORMATION PER B.L.M. PLAT 00238-A-C, 1984
(R1) = RECORD INFORMATION PER U.S.D.A.-F.S. PLAT MAP 413-413B, 1969, G.C.R.
(R2) = RECORD INFORMATION PER PLAT MAP NO. 645, G.C.R.
(R3) = RECORD INFORMATION PER W.D. 2019-001869, G.C.R.
(R4) = RECORD INFORMATION PER RESULT OF ALTA SURVEY, MAP NO. 300, G.C.R.
(M) = MEASURED INFORMATION THIS SURVEY
(C) = CALCULATED INFORMATION THIS SURVEY
= FOUND 2-1/2" TO 3" BRASS CAP AS MARKED, UNLESS OTHERWISE NOTED
= FOUND 1/2" REBAR W/PLASTIC CAP RLS 6975
= FOUND 1/2" REBAR W/PLASTIC CAP RLS 11693
= FOUND 1/2" REBAR W/BRASS TAG LS 5713, UNLESS OTHERWISE NOTED
= SET 1/2" REBAR W/1.5" ALUM. CAP RLS 24516
= SET 1/2" REBAR W/1.5" ALUM. CAP RLS 24516 FOR REFERENCE MONUMENT
{70.00'} = REFERENCE DISTANCE TO CORNER IN TONTO CREEK
= DOWNGUY
= UTILITY POLE
= SEWER MANHOLE OR CLEANOUT
= SEWER LINE
= ELECTRIC OR TELEPHONE PEDESTAL
oh = OVERHEAD LINE
= CONCRETE
= CHAIN LINK FENCE
= BARBED WIRE FENCE
= WOOD FENCE

State of Arizona, County of G
I hereby certify that the within inst
was filed and recorded at the requ
Mary U. Smith Vicki Fulmer
Date 3/20/20 Time 11:10 Map N
Official Records of Gila County,
Witness my hand and official s
the day and year written abo
Sadie Bingham
Gila County Recorder
By Fee # 2

APPROVE
GILA COUNTY COMMU
Surveyor Respo

FOR:
MARY KATHE
25425 S. 18
QUEEN CREE

VICKI FULME
21523 S. 156
GILBERT, AZ.

ROBIN LYNET
2036 N. GILB
MESA, AZ. 85

APPROVED TO REC
This minor Land Division meets the r
of the Gila County Minor Land Divisio
MLD 20-7 3-
PERMIT NO.
GILA COUNTY COMMUNITY DEVELOP
Surveyor Responsible For

CERTIFICATION

This is to certify that this map, consisting of Two (represents a survey made under my supervision duri FEBRUARY, 2020.

24516 JOHN F. DAVIS

EXPIRES: 09-30-2020

NORTHST R SURVI
INCORP
1100 N. BEELINE HWY., SUITE B • PAYSON, ARIZONA 85
REF PROJECT 19-137 PR

5174

Authentisign ID: 762A6D63-1084-4214-B999-3D30823947EB

GILA COUNTY RURAL ADDRESSING

Please Return Original Copy To:
RURAL ADDRESSING
745 N ROSE MOFFORD WAY
GLOBE, AZ. 85501

PROCEDURE FOR NAMING AN EXISTING PUBLIC OR PRIVATE RIGHT –OF –WAY, EASEMENT OR ACCESS ROUTE

In accordance with the provisions of the Gila County Street Naming and Property Numbering Ordinance, the Board of Supervisors may name existing public and private right-of-way, and other access routes. In the naming of access routes, the Board of Supervisors will make every effort to assign those names requested by a majority of the residents or the residents living along said routes provided that the requested name conforms to the Article 6 and 8 of the Street Naming and Property Numbering Ordinances. Citizen petitions must have signatures of at least 75% of the property owners who own property adjacent to the street subject to the proposed naming.

PETITION FOR THE NAMING OF A PRIVATE OR PUBLIC RIGHT –OF-WAY, EASEMENT, OR OTHER ACCESS ROUTE

WE THE UNDERSIGNED, ALL BEING RESIDENTS IN GILA COUNTY, ARIZONA, DO HERE BY PETITION THE HONORABLE BOARD OF SUPERVISORS TO NAME A PUBLIC RIGHT- OF- WAY, EASMENT, OR OTHER ACCESS ROUTE LOCATED AND DESCRIBED AS FOLLOWS

PROPOSED ROAD NAME #1: Helen's Way

PROPOSED ROAD NAME #2: _____

PROPOSED ROAD NAME #3: _____

	Signature (Owner)	APN (Parcel #)	Owner Phone #	Owner Mailing Address
1.	Authentisign Robin Hunt Authentisign Mary Smith	201-06-019Y	480-628-6110	25425 S 183rd Place Queen Creek, AZ 85142
2.	Robin Hunt Mary Smith	201-06-019Z	480-628-6110	25425 S 183rd Place Queen Creek, AZ 85142
3.	Robin Hunt Mary Smith	201-06-019A	480-628-6110	25425 S 183rd Place Queen Creek, AZ 85142
4.	7/15/2020 4:50:45 PM MST Gerald M Ste	201-06-019T	773-484-9755	PO Box 1096 Tonto Basin, AZ 85553
5.	Chuck Beck	201-06-019X	928 951-0368	PO Box 1234 85547 Payson AZ
6.				
7.				

Authentisign ID: 762A6D63-1084-4214-B999-3D30823947EB

GILA COUNTY RURAL ADDRESSING

TO BE FILLED OUT BY COUNTY PERSONNEL

DATE RECEIVED:_____

IT IS RECOMMENDED THAT THE PROPOSED NAME BE:_____

_____**Assigned as requested**

_____**Modified as follows:**_____

Submitted this _____**day of** _____, **2015** _____

Rural Addressing Analyst

Print Form **E-Mail** **Reset**

GILA COUNTY RURAL ADDRESSING

Please Return Original Copy To:
RURAL ADDRESSING
745 N ROSE MOFFORD WAY
GLOBE, AZ. 85501

PROCEDURE FOR NAMING AN EXISTING PUBLIC OR PRIVATE RIGHT –OF –WAY, EASEMENT OR ACCESS ROUTE

In accordance with the provisions of the Gila County Street Naming and Property Numbering Ordinance, the Board of Supervisors may name existing public and private right-of-way, and other access routes. In the naming of access routes, the Board of Supervisors will make every effort to assign those names requested by a majority of the residents or the residents living along said routes provided that the requested name conforms to the Article 6 and 8 of the Street Naming and Property Numbering Ordinances. Citizen petitions must have signatures of at least 75% of the property owners who own property adjacent to the street subject to the proposed naming.

PETITION FOR THE NAMING OF A PRIVATE OR PUBLIC RIGHT –OF-WAY, EASEMENT, OR OTHER ACCESS ROUTE

WE THE UNDERSIGNED, ALL BEING RESIDENTS IN GILA COUNTY, ARIZONA, DO HERE BY PETITION THE HONORABLE BOARD OF SUPERVISORS TO NAME A PUBLIC RIGHT- OF- WAY, EASMENT, OR OTHER ACCESS ROUTE LOCATED AND DESCRIBED AS FOLLOWS

PROPOSED ROAD NAME #1: Campbell Road

PROPOSED ROAD NAME #2: Buffalo Road

PROPOSED ROAD NAME #3: _____

	Signature (Owner)	APN (Parcel #)	Owner Phone #	Owner Mailing Address
1.	Authentisign Keith Campbell 7/30/2020 12:09:19 PM MST	201-20-006	480-861-4178	PO Box 1404 Mesa, AZ 85211
2.	Karen L Kendall	201-~~08~~ 20-007	928-970-0625	PO Box 297 Tonto Basin, AZ 85553
3.				
4.				
5.				
6.				
7.				

GILA COUNTY RURAL ADDRESSING

TO BE FILLED OUT BY COUNTY PERSONNEL

DATE RECEIVED:_____

IT IS RECOMMENDED THAT THE PROPOSED NAME BE:_____

_____Assigned as requested

_____Modified as follows:_____

Submitted this _____day of _____, 2015 _____

Rural Addressing Analyst

Print Form **E-Mail** **Reset**

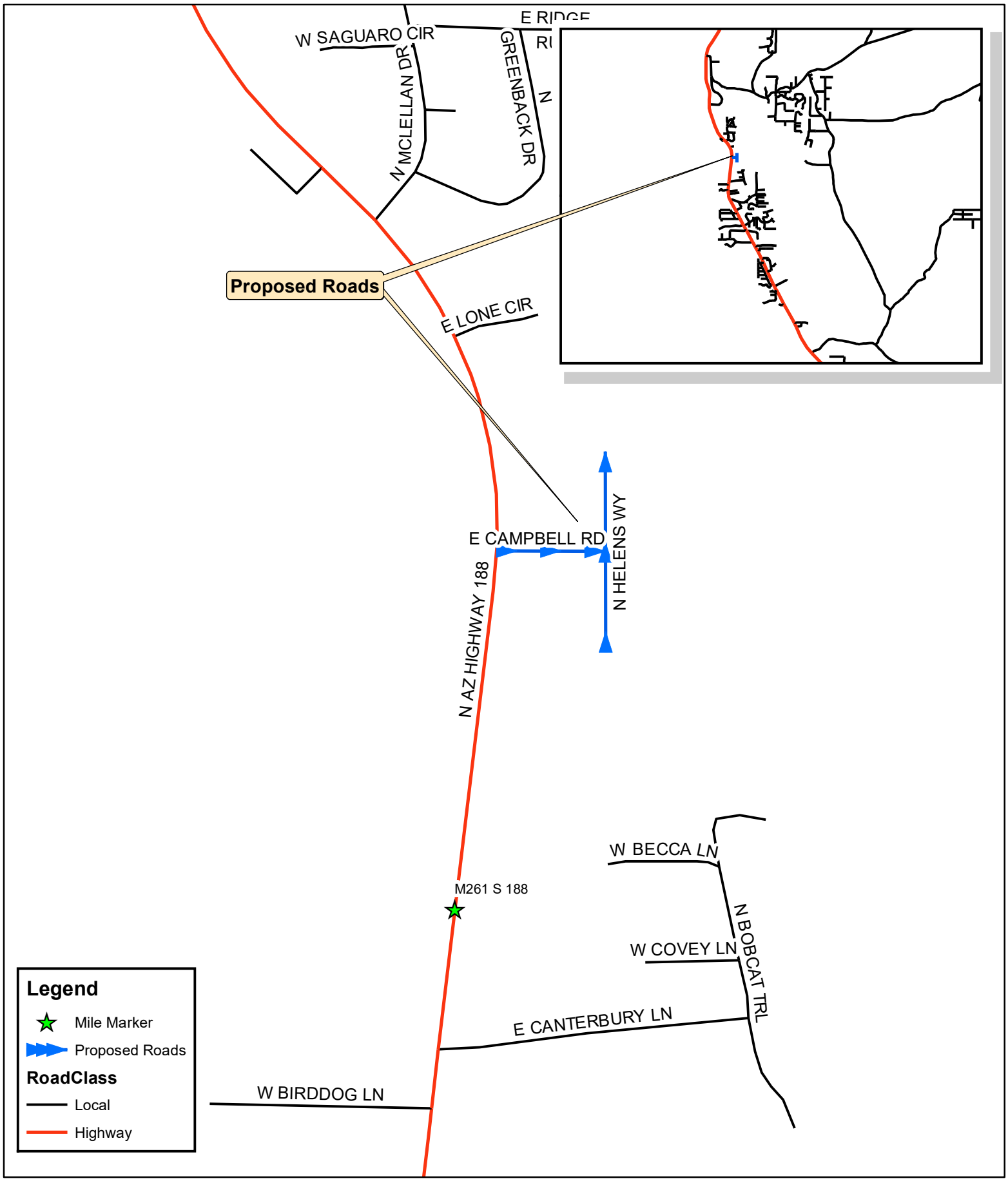

E Campbell Rd/ N Helens Way Road Naming

Gila County GIS
Date: 9/3/2020

645

94-055553

STATE OF ARIZONA, County of Gila, ss:
I do hereby certify that the within instrument was filed and recorded at request of Arthur E. Lloyd
June 13, 1994 Time 4:25 M., Map No. 645 Official Records of Gila County, Arizona.
WITNESS my hand and official seal the day and year first above written.
LINDA HAUGHT ORTEGA, County Recorder
Teresa M. Arriaga, Deputy

RECORDER SEAL GILA COUNTY, ARIZONA

GREENBACK COMMERICAL PARK

A SUBDIVISION OF A PORTION OF THE W1/2 SW 1/4 OF SECTION 14, T.6N.R.10E., G. & S.R.B. & M., GILA COUNTY, ARIZONA

DEDICATION

STATE OF ARIZONA) S.S.
COUNTY OF MARICOPA)

Know all men by these presents: That MR. ARTHUR LLOYD and MR. WES KING, have platted under the name of GREENBACK COMMERCIAL PARK, a subdivision of a portion of the W.1/2 SW.1/4 of Section 14, T.6N. R.10E., G.& S.R.B.& M., GILA County, Arizona, and hereby publishes this plat as said plat of GREENBACK COMMERCIAL PARK and hereby declares that said plat sets forth the location and gives the dimensions of the lots, streets and easements constituting the same and that each lot and street shall be known by the number or name given each respectively on said plat.

In witness whereof: MR. ARTHUR LLOYD and MR. WES KING, as owners, have caused their names to be affixed and are duly authorized so to do this 5 day of May 1994.

By: _____ By: _____
Title: owner Title: owner

ACKNOWLEDGEMENT

STATE OF ARIZONA)
COUNTY OF MARICOPA) S.S.

On this the 5TH day of MAY, 1994, before me, the undersigned officers, personally appeared MR. ARTHUR LLOYD and MR. WES KING who acknowledged themselves to be owners of GREENBACK COMMERCIAL PARK, and being duly authorized to do so, executed the foregoing instrument for the purposes contained therein, by signing their names as officers/owners.

IN WITNESS HEREOF I SET MY HAND AND OFFICIAL SEAL.

BY: Diane E. Armer — NOTARY PUBLIC — MY COMMISSION EXPIRES May 8, 1997

NOTE:

1. A 1/2" REBAR IS SET AT ALL LOT CORNERS AND SUBDIVISION CORNERS.
2. THE CONSTRUCTION AND MAINTENANCE OF ANY ROADWAYS WITHIN THIS SUBDIVISION SHALL BE THE SOLE RESPONSIBILTY OF THE LOT OWNERS. (EXCEPT STATE ROUTE 188)

APPROVAL

Approved by: The BOARD of SUPERVISORS for Gila County, ARIZONA, on the 23 day of MAY, 1994.

By: _____ CHAIRMAN Attest: _____ CLERK

CERTIFICATION

This is to certify that the survey and subdivision of the premises described and platted hereon were made under my direction during the month of April, 1994; That the plat is correct and accurate; That the monuments shown hereon have been located or established as described and that they are permanently set.

R. [illegible] R.L.S. #6975

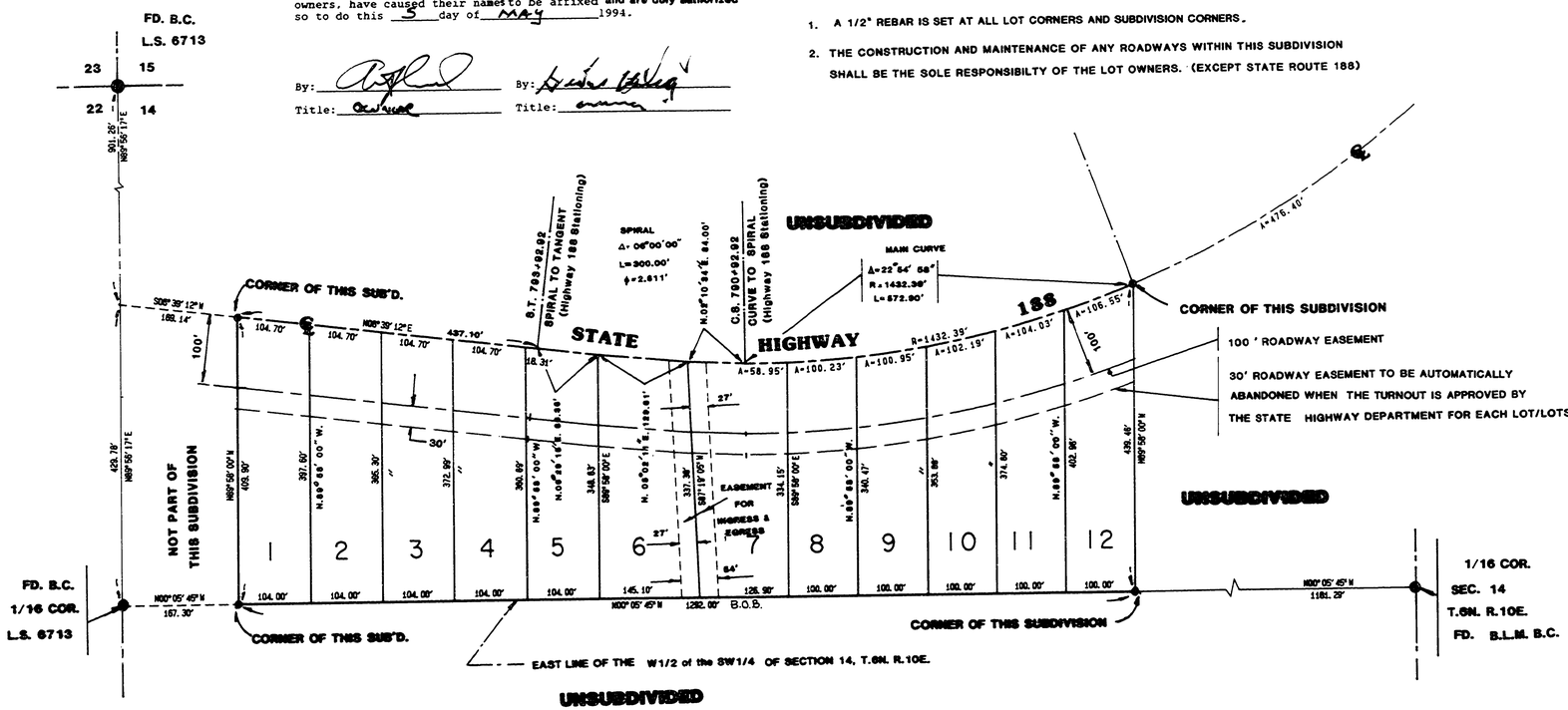

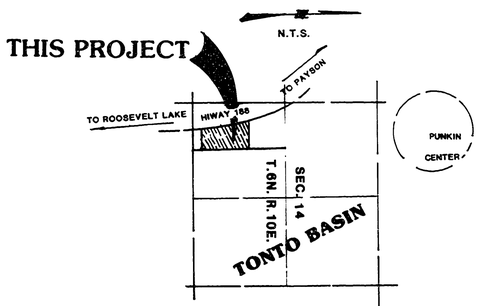

LOCATION MAP

SCALE: 1" = 100'

BAR SCALE: 0' 100' 200' 300'

REVISIONS

DATE: INT: DESCRIPTION:

JOB TITLE: GREENBACK COMMERICAL PARK

DATE:	SURVEYED BY	DRAWN BY:	CHECKED BY:	JOB NO.
MAR 1994	J.S.	T.S.	J.H.	#930308

Engineering, Surveying & Planning, Inc.
459 N. GILBERT ROAD SUITE B-140 GILBERT, ARIZONA 85234
PH #(602) 497-1090 FAX: (602) 497-1086

SHEET 1 OF 1

645

5174A

RECORD OF SURVEY - MINOR LAND DIVISION / PARCEL LINE ADJUSTMENT

OF THOSE PARCELS AS DESCRIBED IN THE INSTRUMENT RECORDED IN WARRANTY DEED 2019-001869, GILA COUNTY RECORDS. LOCATED IN THE SE 1/4 OF THE SW 1/4 OF SECTION 14, TOWNSHIP 6 NORTH, RANGE 10 EAST OF THE GILA & SALT RIVER MERIDIAN, GILA COUNTY, ARIZONA.

U.S. DEPT. OF THE INTERIOR UNLAWFUL TO DEFACE — T 6 N R 10 E, S 14, C-C W-1/16, 1980, CADASTRAL SURVEY, BUREAU OF LAND MANAGEMENT

GRAPHIC SCALE: 0 30 60 90 120 — (IN FEET) 1 inch = 60 ft.

State of Arizona, County of Gila
I hereby certify that the within instrument was filed and recorded at the request of
Mary K. Smith Vicki Fulmer Robin L. Hunt
Date 3/20/20 Time 11:10 Map No. 5174A
Official Records of Gila County, AZ
Witness my hand and official seal the day and year written above
Sadie Bingham
Gila County Recorder
By [signature] Fee # 2020-003319
RECORDING INFORMATION

APPROVED TO RECORD
DATE
GILA COUNTY COMMUNITY DEVELOPMENT DIVISION

Surveyor Responsible For Accuracy

FOR:
MARY KATHERINE SMITH
25425 S. 183RD PLACE
QUEEN CREEK, AZ. 85142

VICKI FULMER
21523 S. 156TH STREET
GILBERT, AZ. 85298

ROBIN LYNETTE HUNT
2036 N. GILBERT ROAD
MESA, AZ. 85203

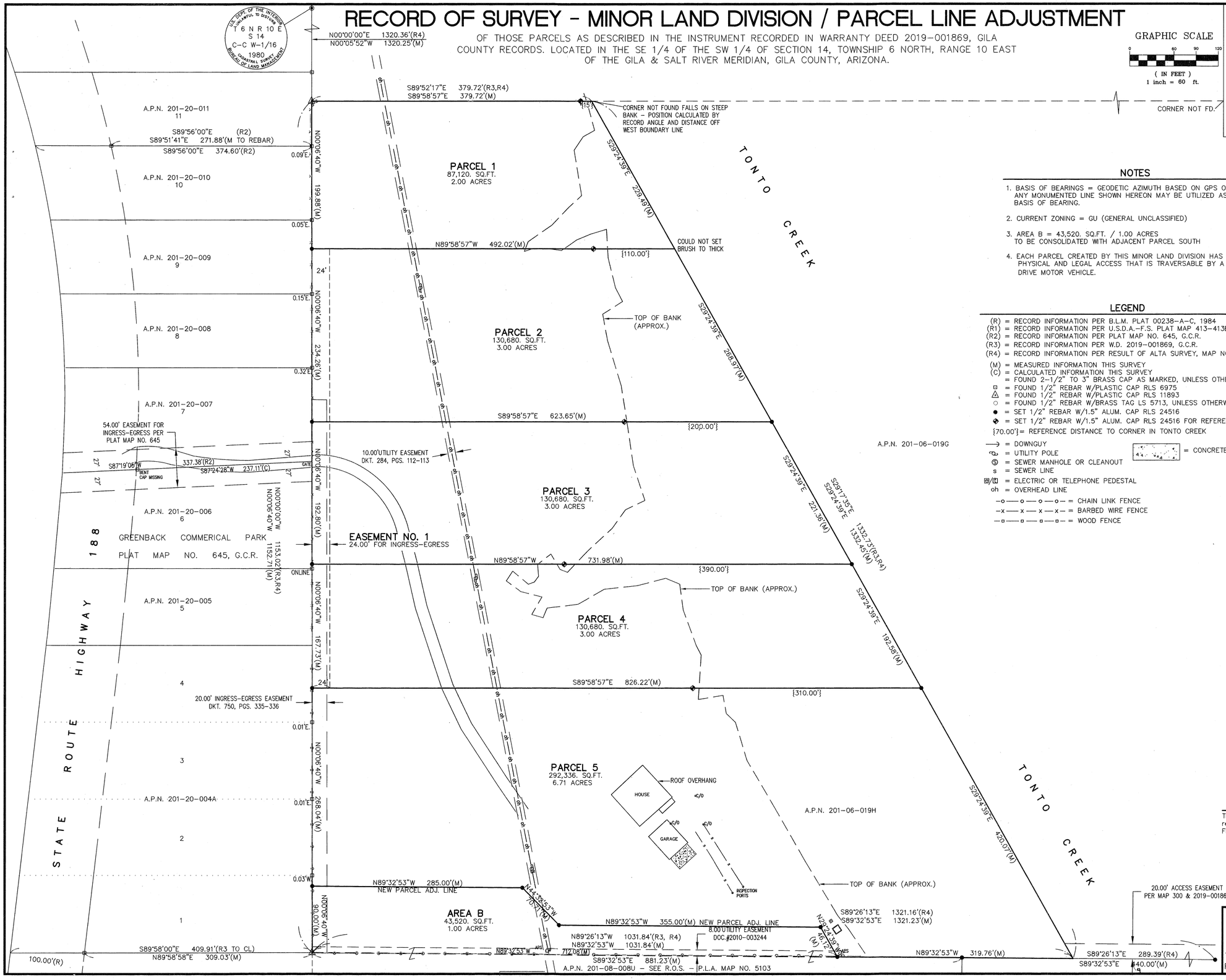

NOTES

1. BASIS OF BEARINGS = GEODETIC AZIMUTH BASED ON GPS OBSERVATIONS, ANY MONUMENTED LINE SHOWN HEREON MAY BE UTILIZED AS A LOCAL BASIS OF BEARING.
2. CURRENT ZONING = GU (GENERAL UNCLASSIFIED)
3. AREA B = 43,520. SQ.FT. / 1.00 ACRES TO BE CONSOLIDATED WITH ADJACENT PARCEL SOUTH
4. EACH PARCEL CREATED BY THIS MINOR LAND DIVISION HAS OR WILL HAVE PHYSICAL AND LEGAL ACCESS THAT IS TRAVERSABLE BY A TWO-WHEEL DRIVE MOTOR VEHICLE.

LEGEND

(R) = RECORD INFORMATION PER B.L.M. PLAT 00238-A-C, 1984
(R1) = RECORD INFORMATION PER U.S.D.A.-F.S. PLAT MAP 413-413B, 1969, G.C.R.
(R2) = RECORD INFORMATION PER PLAT MAP NO. 645, G.C.R.
(R3) = RECORD INFORMATION PER W.D. 2019-001869, G.C.R.
(R4) = RECORD INFORMATION PER RESULT OF ALTA SURVEY, MAP NO. 300, G.C.R.
(M) = MEASURED INFORMATION THIS SURVEY
(C) = CALCULATED INFORMATION THIS SURVEY
= FOUND 2-1/2" TO 3" BRASS CAP AS MARKED, UNLESS OTHERWISE NOTED
= FOUND 1/2" REBAR W/PLASTIC CAP RLS 6975
= FOUND 1/2" REBAR W/PLASTIC CAP RLS 11893
= FOUND 1/2" REBAR W/BRASS TAG LS 5713, UNLESS OTHERWISE NOTED
= SET 1/2" REBAR W/1.5" ALUM. CAP RLS 24516
= SET 1/2" REBAR W/1.5" ALUM. CAP RLS 24516 FOR REFERENCE MONUMENT
{70.00'} = REFERENCE DISTANCE TO CORNER IN TONTO CREEK
= DOWNGUY
= UTILITY POLE
= SEWER MANHOLE OR CLEANOUT
s = SEWER LINE
= ELECTRIC OR TELEPHONE PEDESTAL
oh = OVERHEAD LINE
= CHAIN LINK FENCE
= BARBED WIRE FENCE
= WOOD FENCE
= CONCRETE

APPROVED TO RECORD
This minor Land Division meets the requirements of the Gila County Minor Land Division Ordinance
MLD 20-7 PERMIT NO. 3-20-2020 DATE
GILA COUNTY COMMUNITY DEVELOPMENT DIVISION
Surveyor Responsible For Accuracy

CERTIFICATION

This is to certify that this map, consisting of Two (2) sheets, correctly represents a survey made under my supervision during the Month of FEBRUARY, 2020.

REGISTERED LAND SURVEYOR — CERTIFICATE NO. 24516 — JOHN F. DAVIS — Date Signed 3-4-20 — ARIZONA, U.S.A.

EXPIRES: 09-30-2020 SHEET 1 OF 2

NORTHSTAR SURVEYING INCORPORATED
1100 N. BEELINE HWY., SUITE B ✦ PAYSON, ARIZONA 85541 ✦ (928) 474-9646
REF PROJECT 19-137 PROJECT NO. 20-012

5174A

ARF-6282 **Regular Agenda Item 4. A.**

Regular BOS Meeting

Meeting Date: 10/06/2020
Submitted For: Woody Cline, Member, Board of Supervisors
Submitted By: Cathy Melvin, Executive Assistant
Department: Board of Supervisors-District 3

Information

Request/Subject

Adoption of Resolution No. 20-10-07, a resolution of the Gila County Board of Supervisors supporting the Constitution of the United States of America and the Constitution of the State of Arizona and declaring Gila County a "Constitution Preservation County."

Background Information

There has been considerable discussion regarding the Second Amendment Sanctuary counties and cities across the country that are concerned with certain gun control measures perceived as violative of the Second Amendment. The Gila County Board of Supervisors believes that citizens should be concerned about the Constitution as a whole and every amendment contained therein.

Evaluation

Upon assuming office, each member of the Board of Supervisors took an oath to support and defend the United States Constitution and Constitution and laws of the State of Arizona. The Constitution provides important limitations on the government that protect the fundamental rights of United States citizens.

Conclusion

The Constitution of the United States of America is the supreme law of the United States. Empowered with the sovereign authority of the people by the framers and the consent of the legislatures of the states, it is the source of all government powers and provides important limitations on the government that protect the fundamental rights of United States citizens. It would be beneficial for the Board of Supervisors to revisit their oath and declare Gila County as a Constitution Preservation County.

Recommendation

Staff recommends that it would be beneficial for the Board of Supervisors to adopt Resolution No. 20-10-07 declaring Gila County a Constitution Preservation County.

Suggested Motion

Information/Discussion/Action to adopt Resolution No. 20-10-07 declaring Gila County as a Constitution Preservation County. **(Woody Cline)**

Attachments

Resolution No. 20-10-07

RESOLUTION NO. 20-10-07

A RESOLUTION OF THE BOARD OF SUPERVISORS OF GILA COUNTY, ARIZONA SUPPORTING THE CONSTITUTION OF THE UNITED STATES OF AMERICA AND THE CONSTITUTION OF THE STATE OF ARIZONA BY DECLARING GILA COUNTY A "CONSTITUTION PRESERVATION COUNTY."

WHEREAS, the Board of Supervisors met in Regular Session this 6th day of October 2020; and,

WHEREAS, Arizona Revised Statute §11-251 (17) and (21) provide authorization for the Board of Supervisors to "adopt provisions necessary to preserve the health of the county" and "make and enforce necessary rules and regulations for the government of its body, the preservation of order and the transaction of business"; and,

WHEREAS, assuming office the members of the Gila County Board of Supervisors took an oath to support and defend the United States Constitution and the Constitution and laws of the State of Arizona, and today hereby reaffirm our commitment to the United States Constitution and the Constitution and laws of the State of Arizona; and,

WHEREAS, the Constitution of the United States of America is the supreme law of the United States. Empowered with the sovereign authority of the people by the framers and the consent of the legislatures of the states, it is the source of all government powers, and provides important limitations on the government that protect the fundamental rights of United States citizens; and,

WHEREAS, the Constitution guarantees every American fundamental rights and protection of life, liberty, and prosperity;

NOW, THEREFORE, BE IT RESOLVED that the Gila County Board of Supervisors, by the authority granted by the laws of the State of Arizona and the people of Gila County, Arizona, does hereby commit to stand and defend the rights and liberties as guaranteed by the Constitution of the United States of America and the Constitution of the State of Arizona by declaring Gila County a Constitution Preservation County.

PASSED and ADOPTED this 6th day of October 2020, at Globe, Gila County, Arizona.

Attest:

GILA COUNTY BOARD OF SUPERVISORS

_____
Marian Sheppard, Clerk of the Board

_____
Woody Cline, Chairman

Approved as to form:

_____
The Gila County Attorney's Office

ARF-6274 **Regular Agenda Item 4. B.**

Regular BOS Meeting

Meeting Date:	10/06/2020		
Submitted For:	Paula Horn, Deputy Director of Health		
Submitted By:	Paula Horn, Deputy Director of Health		
Department:	Health & Emergency Management		
Fiscal Year:	2019-2022	Budgeted?:	Yes
Contract Dates Begin & End:	1/1/2018 - 12/31/2022	Grant?:	Yes
Matching Requirement?:	No	Fund?:	Renewal

Information

Request/Subject

Amendment No. 2 to an Intergovernmental Agreement (Contract No. ADHS18-177678) with the Arizona Department of Health Services (ADHS).

Background Information

An Intergovernmental Agreement (IGA) (Contract No. ADHS13-041539) with the ADHS expired on December 31, 2017. IGA (Contract No. ADHS18-177678) replaces the previous IGA and it was fully executed by the Board of Supervisors and the ADHS on February 1, 2018, which allows the Gila County Health Department to continue to operate an immunization program for the residents of Gila County from January 1, 2018, to December 31, 2022. Amendment No. 1 was approved by the Gila County Board of Supervisors on July 23, 2019.

Amendment No. 2 to the IGA revises and replaces the Price Sheet, and revises the Scope of Work as follows:

(1) The Price Sheet is revised and replaced by the Price Sheet of this Amendment Two
(2) Scope of Work - Page 19, Provision 4.12, Item 4.12.2 is added as follows: *Provide Supplemental Flu activities as defined by the County Health Department and approved by the Immunization Program Office, to increase the flu vaccination rates for adults, especially high-risk adults, within the county. These efforts are intended to help keep hospitalization rates for flu down during the COVID-19 pandemic.*

Evaluation

By continuing with our immunization program, the Health Division can continue to administer the Vaccines for Children Programs (VFC) and all publicly-purchased vaccines; assess and improve immunization coverage levels; assure access to vaccines for eligible populations in Gila County, and prevent and control vaccine-preventable diseases. Amendment No. 2 will provide Supplemental Flu activities as defined by the County Health Division ad approved by the Immunization Program Office, to increase the flu vaccination rates for adults, especially high-risk adults, within the county. These efforts are intended to help keep hospitalization rates for flu down during the COVID-19 pandemic.

Conclusion

It is important that this amendment to the IGA be approved by the Board of Supervisors in order to allow the Gila County Health Division to continue to operate the Immunization Program for the residents of Gila County.

Recommendation

It is the recommendation of the Health and Emergency Management Department Director that the Board of Supervisors approve Amendment No. 2 to the IGA (Contract No. ADHS18-177678) with the ADHS for additional funding in the amount of $77,500 as needed by June 30, 2021.

Suggested Motion

Information/Discussion/Action to approve Amendment No. 2 to an Intergovernmental Agreement (Contract No. ADHS18-177678) between Gila County and the Arizona Department of Health Services to replace the Price Sheet which includes funding for an additional $77,500 as needed through June 30, 2021, and to revise the Scope of Work. **(Michael O'Driscoll/Paula Horn)**

Attachments

Amendment No. 2

Amendment 1

IGA Contract No. ADHS18-177678 executed

	INTERGOVERNMENTAL AGREEMENT (IGA) **Amendment**	**ARIZONA DEPARTMENT OF HEALTH SERVICES** 150 18th Ave Suite 530 Phoenix, Arizona 85007
	Contract No.: ADHS18-177678 / IGA Amendment No: 2 Arizona Procurement Portal Amendment No.: 2	Procurement Officer **KATHLEEN SHIPMAN**

IMMUNIZATION SERVICES

It is mutually agreed that the Intergovernmental Agreement referenced is amended as follows:

1. Pursuant to Terms and Conditions, Page Seven (7), Provision Six (6), Contract Changes; the Intergovernmental Agreement is amended to revise the following:

1.1 The Price Sheet is revised and replaced by the Price Sheet of this Amendment Two (2); and

1.2 Scope of Work, Page Nineteen (19), Provision 4.12, added item 4.12.2 that is hereby revised in this Amendment Two (2) to read:

4.12.2 Provide Supplemental Flu activities as defined by the County Health Department and approved by the Immunization Program Office, to increase the flu vaccination rates for adults, especially high-risk adults, within the county. These efforts are intended to help keep hospitalization rates for flu down during the COVID-19 pandemic.

All other provisions of this agreement remain unchanged.

Contractor Name: **GILA COUNTY HEALTH DEPARTMENT**	Authorized Signature Woody Cline
Address: **1400 E. ASH ST.**	Print Name
GLOBE / **ARIZONA** / **85501** City / State / Zip	Chairman, Board of Supervisors Title
Pursuant to A.R.S. § 11-952, the undersigned public agency attorney has determined that this Intergovernmental Agreement is in proper form and is within the powers and authority granted under the laws of Arizona.	This Intergovernmental Agreement Amendment shall be effective the date indicated. The Public Agency is hereby cautioned not to commence any billable work or provide any material, service or construction under this IGA until the IGA has been executed by an authorized ADHS signatory. State of Arizona
Signature / Date	Signed this _____ day of _____ 2020.
Gila County Attorney's Office	
Print Name	Procurement Officer
Contract No.: **ADHS18-177678**, which is an Agreement between public agencies, has been reviewed pursuant to A.R.S. § 11-952 by the undersigned Assistant Attorney, who has determined that it is in proper form and is within the powers and authority granted under the laws of the State of Arizona.	
Signature / Date	
Assistant Attorney General	
Print Name	

	INTERGOVERNMENTAL AGREEMENT (IGA) **Amendment**		ARIZONA DEPARTMENT OF HEALTH SERVICES 150 18th Ave Suite 530 Phoenix, Arizona 85007
	Contract No.: ADHS18-177678	IGA Amendment No: 2 Arizona Procurement Portal Amendment No.: 2	Procurement Officer **KATHLEEN SHIPMAN**

PRICE SHEET

Activity	Frequency	Unit Rate	Unit of Measure	Total
Total Personnel/ERE; Salary/Fringe – May claim only salary and fringe benefits for immunization program staff/other staff who work to meet contract requirements	Yearly	N/A	Total	Up to $50,000.00
Immunization Visit for children zero (0) to eighteen (18) years of age who meet VFC eligibility requirements. Do not include visits for insured children.	Quarterly	$50.00	Per Visit	As approved by ADHS and authorized by purchase order
Immunization Visit for adults nineteen (19) years of age and older who meet VFA eligibility requirements. Do not include visits for insured adults	Quarterly, when specific VFA funds are available	$50.00	Per Visit	
Immunization Completion report for children zero (0) to twenty-four (24) months of age for the 4:3:1:3:3:1:4 series	Quarterly	$100.00	Per Series Completion	
Perinatal Hepatitis B Case Management – Prenatal	Quarterly	$300.00	Per Case	
Perinatal Hepatitis B Case Management – Postnatal	Quarterly	$200.00	Per Case	
Immunization Visit for Flu Vaccine, in children and adults who meet VFC and VFA eligibility requirements. Do not include visits for insured children or adults.	When specific pan flu vaccine funds are available	$50.00	Per Visit	
IDR Submission – Preparation and Submittal of School/Child Care IDR by CHD nurse or in cooperation with school/child care personnel	Optional	$250.00	Each/per grade level IDR	
IDR Validation – On-site visit to schools/child care facilities to validate IDR submission data	Optional	$50.00	Each/per grade level validation	
Supplemental flu vaccination activities	As needed by June 30, 2021	NA	NA	Not to exceed allocation of $77,500

	INTERGOVERNMENTAL AGREEMENT (IGA) AMENDMENT	**ARIZONA DEPARTMENT OF HEALTH SERVICES** 150 N. 18th Avenue, Suite 260 Phoenix, Arizona 85007
	Contract No.: **ADHS18-177678** — Amendment No.: **1**	Procurement Officer: **Bariah Steiner**

Immunization Services

Pursuant to Uniform Terms and Conditions, Provision (6) Contract Changes, (6.1) Amendments, Purchase Orders, and Change Orders, it is mutually agreed that the Intergovernmental Agreement referenced is amended as follows:

The Scope of Work is hereby revised and replaced as follows:

1. Section Four (4), Tasks, Item 4.1.2, is hereby revised in this Amendment One (1); and
2. Section Four (4), Tasks, Item 4.5, Activity Five (5) AFIX Assessment Reports, is hereby revised and replaced in this Amendment One (1).

The Uniform Terms and Conditions are revised and replaced in this Amendment One (1) to read:

1. 4.11. Federal and State Immigration Laws: The Contractor shall comply with all federal, state and local immigration laws and regulations relating to the immigration status of their employees during the term of the Contract. Further, the Contractor shall flow down this requirement to all subcontractors utilized during the term of the Contract. The State shall retain the right to perform random audits of Contractor and subcontractor records or to inspect papers of any employee thereof to ensure compliance. Should the State determine that the Contractor and/or any subcontractors be found noncompliant, the State may pursue all remedies allowed by law, including, but not limited to; suspension of work, termination of the Contract for default and suspension and/or debarment of the Contractor.

Continued onto the next page

ALL OTHER PROVISIONS OF THIS AGREEMENT REMAIN UNCHANGED.

GILA COUNTY Contractor Name:	Authorized Signature
1400 E. ASH ST. Address:	TIM R. HUMPHREY Print Name
Globe / **AZ** / **85501** City / State / Zip	CHAIRMAN OF THE BOARD OF SUPERVISORS Title
Pursuant to A.R.S. § 11-952, the undersigned public agency attorney has determined that this Intergovernmental Agreement is in proper form and is within the powers and authority granted under the laws of Arizona Jefferson Adkerson, for Charles Shire — 07/23/2019 Signature — Date THE GILA COUNTY ATTORNEY'S OFFICE Print Name — Title	This Intergovernmental Agreement Amendment shall be effective the date indicated. The Public Agency is hereby cautioned not to commence any billable work or provide any material, service or construction under this IGA until the IGA has been executed by an authorized ADHS signatory. State of Arizona Signed this 21st day of August 2019 Christie Ruth Procurement Officer
Attorney General Contract No.: **ADHS18-177678**, which is an Agreement between public agencies, has been reviewed pursuant to A.R.S. § 11-952 by the undersigned Assistant Attorney, who has determined that it is in proper form and is within the powers and authority granted under the laws of the State of Arizona. 8/14/19 Signature — Date Aubrey Joy Corcoran — Assistant Attorney General Print Name — Title	RESERVED FOR USE BY THE SECRETARY OF STATE

4.1.2. Share the IAP and Immunization Quality Improvement for Providers (IQIP) Assessment Reports with the Medical Director, Local Health Officer (LHO), and/or other staff for review and/or approval as dictated by county health department protocol.

4.5. Activity Five (5) Immunization Quality Improvement

4.5.1. AIPO will provide quality improvement assistance to the Contractor, on an annual basis, as part of the Immunization Quality Improvement for Providers (IQIP) program. This program replaces the current Assessment, Feedback, Incentives and eXchange (AFIX) program, per CDC directives, on July 1, 2019. As part of the IQIP requirements, the Contractor shall receive the following assistance:

4.5.1.1. An annual in-person site visit from AIPO staff to include an ASIIS-based coverage rate report for children ages 24-35 months and for adolescents aged thirteen (13) years, including a list of patients not up-to-date. The visit will include a discussion of current immunization practices and quality improvement goals;

4.5.1.2. Phone-based check-in calls at two (2) months and six (6) months post-site visit to include a discussion of the quality improvement objectives and any technical assistance requested by the Contractor; and

4.5.1.3. An email-based check-in at twelve (12) months post-site visit, to include a follow-up coverage rate assessment, a discussion of progress toward quality improvement goals, and any other technical assistance requested by the Contractor.

4.5.2. Removed.

INTERGOVERNMENTAL AGREEMENT (IGA)

Contract No. ADHS18-177678

ARIZONA DEPARTMENT OF HEALTH SERVICES
150 North 18th Avenue, Suite 260
Phoenix, Arizona 85007
(602) 542-1040
(602) 542-1741 FAX

Project Title: Immunization Services

Begin Date: January 01, 2018

Geographic Service Area: Gila County

Termination Date: December 31, 2022

Arizona Department of Health Services has authority to contract for services specified herein in accordance with A.R.S. §§ 11-951, 11-952, 36-104 and 36-132. The Contractor represents that it has authority to contract for the performance of the services provided herein pursuant to:

- [X] **Counties: A.R.S. §§ 11-201, 11-951, 11-952 and 36-182.**
- [ ] **Indian Tribes: A.R.S. §§ 11-951, 11-952 and the rules and sovereign authority of the contracting Indian Nation.**
- [ ] **School Districts: A.R.S. §§ 11-951, 11-952, and 15-342.**
- [ ] **City of Phoenix: Chapter II, §§ 1 & 2, Charter, City of Phoenix.**
- [ ] **City of Tempe: Chapter 1, Article 1, §§ 1.01 & 1.03, Charter, City of Tempe.**

Amendments signed by each of the parties and attached hereto are hereby adopted by reference as a part of this Contract, from the effective date of the Amendment, as if fully set out herein.

Arizona Transaction (Sales) Privilege: _____

Federal Employer Identification No.: _____

Tax License No.: _____

Contractor Name: **Gila County Health Department**
Address: **1400 E. Ash St.**
Globe, AZ 85501

FOR CLARIFICATION, CONTACT:

Name: _____

Phone: _____

FAX No: _____

E-mail: _____

CONTRACTOR SIGNATURE:
The Contractor agrees to perform all the services set forth in the Agreement and Work Statement.

Tommie C. Martin 1/23/18

Signature of Person Authorized to Sign Date

Tommie Martin, Chairman, Board of Supervisors

Print Name and Title

This Contract shall henceforth be referred to as Contract

No. ADHS18-177678 The Contractor is hereby cautioned not to commence any billable work or provide any material, service or construction under this Contract until Contractor receives a fully executed copy of the Contract.

State of Arizona

Signed this 5th **day of** February, 2018

Procurement Officer

CONTRACTOR ATTORNEY SIGNATURE:

Pursuant to A.R.S. § 11-952, the undersigned Contractor's Attorney has determined that this Intergovernmental Agreement is in proper form and is within the powers and authority granted under the laws of Arizona.

Jefferson R. Dalton 1/23/18

Signature of Person Authorized to Sign Date

Jefferson R. Dalton
Deputy County Attorney, Civil Bureau Chief

Print Name and Title

Attorney General Contract, No. P0012014000078, which is an Agreement between public agencies, has been reviewed pursuant to A.R.S. § 11-952 by the undersigned Assistant Attorney General, who has determined that it is in the proper form and is within the powers granted under the laws of the State of Arizona to those parties to the Agreement represented by the Attorney General.
The Attorney General, BY:

Molly Bonsall 2-1-18

Signature **Date**

Assistant Attorney General:

Molly Bonsall

1. **Definition of Terms.** As used in this Contract, the terms listed below are defined as follows:

1.1 *"Attachment"* means any document attached to the Contract and incorporated into the Contract.

1.2 *"ADHS"* means Arizona Department of Health Services.

1.3 *"Budget Term"* means the period of time for which the contract budget has been created and during which funds should be expended.

1.4 *"Change Order"* means a written order that is signed by a Procurement Officer and that directs the Contractor to make changes authorized by the Uniform Terms and Conditions of the Contract.

1.5 *"Contract"* means the combination of the Uniform and Special Terms and Conditions, the Specifications and Statement or Scope of Work, Attachments, Referenced Documents, any Contract Amendments and any terms applied by law.

1.6 *"Contract Amendment"* means a written document signed by the Procurement Officer and the Contractor that is issued for the purpose of making changes in the Contract.

1.7 *"Contractor"* means any person who has a Contract with the Arizona Department of Health Services.

1.8 *"Cost Reimbursement"* means a contract under which a contractor is reimbursed for costs, which are reasonable, allowable and allocable in accordance with the contract terms and approved by ADHS.

1.9 *"Days"* means calendar days unless otherwise specified.

1.10 *"Fixed Price"* establishes a set price per unit of service. The set price shall be based on costs, which are reasonable, allowable and allocable.

1.11 *"Gratuity"* means a payment, loan, subscription, advance, deposit of money, services, or anything of more than nominal value, present or promised, unless consideration of substantially equal or greater value is received.

1.12 *"Materials"* unless otherwise stated herein, means all property, including but not limited to equipments, supplies, printing, insurance and leases of property.

1.13 *"Procurement Officer"* means the person duly authorized by the State to enter into and administer Contracts and make written determinations with respect to the Contract.

1.14 *"Purchase Order"* means a written document that is signed by a Procurement Officer, that requests a vendor to deliver described goods or services at a specific price and that, on delivery and acceptance of the goods or services by ADHS, becomes an obligation of the State.

1.15 *"Services"* means the furnishing of labor, time or effort by a Contractor or Subcontractor.

1.16 *"Subcontract"* means any contract, express or implied, between the Contractor and another party or between a subcontractor and another party delegating or assigning, in whole or in part, the making or furnishing of any material or any service required for the performance of this Contract.

1.17 *"State"* means the State of Arizona and/or the ADHS. For purposes of this Contract, the term "State" shall not include the Contractor.

2. Contract Type.

This Contract shall be:

__X__ Fixed Price

3. Contract Interpretation.

3.1. Arizona Law. The law of Arizona applies to this Contract including, where applicable, the Uniform Commercial Code as adopted by the State of Arizona.

3.2. Implied Contract Terms. Each provision of law and any terms required by law to be in this Contract are a part of this Contract as if fully stated in it.

3.3. Contract Order of Precedence. In the event of a conflict in the provisions of the Contract, as accepted by the State and as they may be amended, the following shall prevail in the order set forth below:

3.3.1. Terms and Conditions;

3.3.2. Statement or Scope of Work;

3.3.3. Attachments; and

3.3.4. Referenced Documents.

3.4. Relationship of Parties. The Contractor under this Contract is an independent Contractor. Neither party to this Contract shall be deemed to be the employee or agent of the other party to the Contract.

3.5. Severability. The provisions of this Contract are severable. Any term or condition deemed illegal or invalid shall not affect any other term or condition of the Contract.

3.6. No Parole Evidence. This Contract is intended by the parties as a final and complete expression of their agreement. No course of prior dealings between the parties and no usage of the trade shall supplement or explain any terms used in this document.

3.7. No Waiver. Either party's failure to insist on strict performance of any term or condition of the Contract shall not be deemed a waiver of that term or condition even if the party accepting or acquiescing in the nonconforming performance knows of the nature of the performance and fails to object to it.

3.8. Headings. Headings are for organizational purposes only and shall not be interpreted as having legal significance or meaning.

4. Contract Administration and Operation.

4.1. Term. As indicated on the signature page of the Contract, the Contract shall be effective as of the Begin Date and shall remain effective until the Termination Date.

4.2. Contract Renewal. This Contract shall not bind, nor purport to bind, the State for any contractual commitment in excess of the original Contract period. The term of the Contract shall not exceed five years. However, if the original Contract period is for less than five years, the State shall have the right, at its sole option, to renew the Contract, so long as the original Contract period together with the renewal periods does not exceed five years. If the State exercises such rights, all terms, conditions and provisions of the original Contract shall remain the same and apply during the renewal period with the exception of price and Scope of Work, which may be renegotiated.

4.3. New Budget Term. If a budget term has been completed in a multi-term Contract, the parties may agree to

change the amount and type of funding to accommodate new circumstances in the next budget term. Any increase or decrease in funding at the time of the new budget term shall coincide with a change in the Scope of Work or change in cost of services as approved by the Arizona Department of Health Services.

4.4. Non-Discrimination. The Contractor shall comply with State Executive Order No. 2009-09 and all other applicable Federal and State laws, rules and regulations, including the Americans with Disabilities Act.

4.5. Records and Audit. Under A.R.S. § 35-214 and A.R.S. § 35-215, the Contractor shall retain and shall contractually require each subcontractor to retain all data and other records ("records") relating to the acquisition and performance of the Contract for a period of five years after the completion of the Contract. All records shall be subject to inspection and audit by the State and where applicable the Federal Government at reasonable times. Upon request, the Contractor shall produce a legible copy of any or all such records.

4.6. Financial Management. For all contracts, the practices, procedures, and standards specified in and required by the Accounting and Auditing Procedures Manual for the ADHS funded programs shall be used by the Contractor in the management of Contract funds and by the State when performing a Contract audit. Funds collected by the Contractor in the form of fees, donations and/or charges for the delivery of these Contract services shall be accounted for in a separate fund.

4.6.1. *Federal Funding*. Contractors receiving federal funds under this Contract shall comply with the certified finance and compliance audit provision of the Office of Management and Budget (OMB) Circular A-133, if applicable. The federal financial assistance information shall be stated in a Change Order or Purchase Order.

4.6.2. *State Funding*. Contractors receiving state funds under this Contract shall comply with the certified compliance provisions of A.R.S. § 35-181.03.

4.7. Inspection and Testing. The Contractor agrees to permit access, at reasonable times, to its facilities.

4.8. Notices. Notices to the Contractor required by this Contract shall be made by the State to the person indicated on the signature page by the Contractor, unless otherwise stated in the Contract. Notices to the State required by the Contract shall be made by the Contractor to an ADHS Procurement Officer, unless otherwise stated in the Contract. An authorized ADHS Procurement Officer and an authorized Contractor representative may change their respective person to whom notice shall be given by written notice, and an amendment to the Contract shall not be necessary.

4.9. Advertising and Promotion of Contract. The Contractor shall not advertise or publish information for commercial benefit concerning this Contract without the prior written approval of an ADHS Procurement Officer.

4.10. Property of the State.

4.10.1. *Equipment*. Except as provided below or otherwise agreed to by the parties, the title to any and all equipment acquired through the expenditure of funds received from the State shall remain the property of the State by and through the ADHS and, as such, shall remain under the sole direction, management and control of the ADHS. When this Contract is terminated, the disposition of all such property shall be determined by the ADHS. For Fixed Price contracts, when the Contractor provides the services/materials required by the Contract, any and all equipment purchased by the Contractor remains the property of the Contractor. All purchases of equipment need to be reported to the ADHS Office of Inventory Control.

4.10.2. *Title and Rights to Materials*. As used in this section, the term "Materials" means all products created or produced by the Contractor under this Contract, including, but not limited to: written and electronic information, recordings, reports, research, research findings, conclusions, abstracts, results, software, data and any other intellectual property or deliverables created, prepared, or

received by the Contractor in performance of this Contract. Contractor acknowledges that all Materials are the property of the State by and through the ADHS and, as such, shall remain under the sole direction, management and control of the ADHS. The Contractor is not entitled to a patent or copyright on these Materials and may not transfer a patent or copyright on them to any other person or entity. To the extent any copyright in any Materials may originally vest in the Contractor, the Contractor hereby irrevocably transfers to the ADHS, for and on behalf of the State, all copyright ownership. The ADHS shall have full, complete and exclusive rights to reproduce, duplicate, adapt, distribute, display, disclose, publish, release and otherwise use all Materials. The Contractor shall not use or release these Materials without the prior written consent of the ADHS. When this Contract is terminated, the disposition of all such Materials shall be determined by the ADHS. Further, the Contractor agrees to give recognition to the ADHS for its support of any program when releasing or publishing program Materials.

4.10.3. *Notwithstanding the above, if the Contractor is a State agency, the following shall apply instead:* It is the intention of ADHS and Contractor that all material and intellectual property developed under this Agreement be used and controlled in ways to produce the greatest benefit to the parties to this Contract and the citizens of the State of Arizona. As used in this paragraph, "Material" means all written and electronic information, recordings, reports, findings, research information, abstracts, results, software, data, discoveries, inventions, procedures and processes of services developed by the Contractor and any other materials created, prepared or received by the Contractor and subcontractors in performance of this Agreement. "Material" as used herein shall not include any pre-existing data, information, materials, discoveries, inventions or any form of intellectual property invented, created, developed or devised by Contractor (or its employees, subcontractors or agents) prior to the commencement of the services funded by this Agreement or that may result from Contractor's involvement in other service activities that are not funded by the Agreement.

4.10.4. Title and exclusive copyright to all Material shall vest in the State of Arizona, subject to any rights reserved on behalf of the federal government. As State agencies and instrumentalities, both ADHS and Contractor shall have full, complete, perpetual, irrevocable and non-transferable rights to reproduce, duplicate, adapt, make derivative works, distribute, display, disclose, publish and otherwise use any and all Material. The Contractor's right to use Material shall include the following rights: the right to use the Material in connection with its internal, non-profit research and educational activities, the right to present at academic or professional meetings or symposia and the right to publish in journals, theses, dissertations or otherwise of Contractor's own choosing. Contractor agrees to provide ADHS with a right of review prior to any publication or public presentation of the Material, and ADHS shall be entitled to request the removal of its confidential information or any other content the disclosure of which would be contrary to the best interest of the State of Arizona. Neither party shall release confidential information to the public without the prior expressly written permission of the other, unless required by the State public records statutes or other law, including a court order. Each party agrees to give recognition to the other party in all public presentations or publications of any Material, when releasing or publishing them.

4.10.5. In addition, ADHS and Contractor agree that any and all Material shall be made freely available to the public to the extent it is in the best interest of the State. However, if either party wants to license or assign an intellectual property interest in the material to a third-party for monetary compensation, ADHS and Contractor agree to convene to determine the relevant issues of title, copyright, patent and distribution of revenue. In the event of a controversy as to whether the Material is being used for monetary compensation or in a way that interferes with the best interest of the state or ADHS, then the Arizona Department of Administration shall make the final decision. Notwithstanding the above, "monetary compensation' does not include compensation paid to an individual creator for traditional publications in academia (the copyrights to which are Employee-Excluded Works under ABOR Intellectual Property Policy Section 6-908C.4.), an honorarium or other reimbursement of expenses for an academic or professional presentation, or an unprofitable distribution of Material.

4.11. Federal and State Immigration Laws: In accordance with A.R.S. § 41-4401, each party hereby warrants its compliance with all federal immigration laws and regulations that relate to its employees and A.R.S. § 23-214(A). If either party uses any subcontractors in performance of this contract, subcontractors shall warrant their compliance with all federal immigration laws and regulations that relate to their employees and A.R.S. § 23-214(A). A breach of this warranty shall be deemed a material breach of the contract subject to penalties up to and including termination of this contract. Each party retains the legal right to inspect the papers of the other and its subcontractors who work on the contract to ensure that it or its subcontractors are complying with this warranty.

5. Costs and Payments

5.1. Payments. Payments shall comply with the requirements of A.R.S. Titles 35 and 41, net 30 days. Upon receipt and acceptance of goods or services, the Contractor shall submit a complete and accurate Contractor's Expenditure Report for payment from the State within thirty (30) days, as provided in the Accounting and Auditing Procedures Manual for the ADHS.

5.2. Recoupment of Contract Payments.

5.2.1. *Unearned Advanced Funds.* Any unearned State funds that have been advanced to the Contractor and remain in its possession at the end of each budget term, or at the time of termination of the Contract, shall be refunded to the ADHS within forty-five (45) days of the end of a budget term or of the time of termination.

5.2.2. *Contracted Services.* In a fixed price contract, if the number of services provided is less than the number of services for which the Contractor received compensation, funds to be returned to the ADHS shall be determined by the Contract price. Where the price is determined by cost per unit of service or material, the funds to be returned shall be determined by multiplying the unit of service cost by the number of services the Contractor did not provide during the Contract term. Where the price for a deliverable is fixed, but the deliverable has not been completed, the Contractor shall be paid a pro rata portion of the completed deliverable. In a cost reimbursement contract, the ADHS shall pay for any costs that the Contractor can document as having been paid by the Contractor and approved by ADHS. In addition, the Contractor will be paid its reasonable actual costs for work in progress as determined by Generally Accepted Accounting Procedures up to the date of contract termination.

5.2.3. *Refunds.* Within forty-five (45) days after the end of each budget term or of the time of termination of the Contract, the Contractor shall refund the greater of: i) the amount refundable in accordance with paragraph 4.2.1, Unearned Advanced Funds; or ii) the amount refundable in accordance with paragraph 5.2.2, Contracted Services.

5.2.4. *Unacceptable Expenditures.* The Contractor agrees to reimburse the ADHS for all Contract funds expended, which are determined by the ADHS not to have been disbursed by the Contractor in accordance with the terms of this Contract. The Contractor shall reimburse ADHS within 45 days of the determination of unacceptability.

5.3. Unit Costs/Rates or Fees. Unit costs/rates or fees shall be based on costs, which are determined by ADHS to be reasonable, allowable and allocable as outlined in the Accounting and Auditing Procedures Manual for the ADHS.

5.4. Applicable Taxes.

5.4.1. *State and Local Transaction Privilege Taxes.* The State of Arizona is subject to all applicable state and local transaction privilege taxes. Transaction privilege taxes apply to the sale and are the responsibility of the seller to remit. Failure to collect taxes from the buyer does not relieve the seller from its obligation to remit taxes.

5.4.2. *Tax Indemnification*. The Contractor and all subcontractors shall pay all federal, state and local taxes applicable to its operation and any persons employed by the Contractor. Contractor shall require all subcontractors to hold the State harmless from any responsibility for taxes, damages and interest, if applicable, contributions required under Federal, and/or state and local laws and regulations and any other costs, including transaction privilege taxes, unemployment compensation insurance, Social Security and Worker's Compensation.

5.4.3. *I.R.S. W9 Form*. In order to receive payment under any resulting Contract, the Contractor shall have a current I.R.S. W9 Form on file with the State of Arizona.

5.5. Availability of Funds for the Next Fiscal Year. Funds may not be presently available for performance under this Contract beyond the first year of the budget term or Contract term. The State may reduce payments or terminate this Contract without further recourse, obligation or penalty in the event that insufficient funds are appropriated in the subsequent budget term. The State shall not be liable for any purchases or Subcontracts entered into by the Contractor in anticipation of such funding. The Procurement Officer shall have the discretion in determining the availability of funds.

5.6. Availability of Funds for the Current Contract Term. Should the State Legislature enter back into session and decrease the appropriations through line item or general fund reductions, or for any other reason these goods or services are not funded as determined by ADHS, the following actions may be taken by ADHS:

5.6.1. Accept a decrease in price offered by the Contractor;

5.6.2. Reduce the number of goods or units of service and reduce the payments accordingly;

5.6.3. Offer reductions in funding as an alternative to Contract termination; or

5.6.4. Cancel the Contract.

6. Contract Changes

6.1. Amendments, Purchase Orders and Change Orders. This Contract is issued under the authority of the Procurement Officer who signed this Contract. The Contract may be modified only through a Contract Amendment, Purchase Order and/or Change Order within the scope of the Contract, unless the change is administrative or otherwise permitted by the Special Terms and Conditions. Changes to the Contract, including the addition of work or materials, the revision of payment terms, or the substitution of work or materials, directed by an unauthorized State employee or made unilaterally by the Contractor are violations of the Contract and of applicable law. Such changes, including unauthorized Contract Amendments, Purchase Orders and/or Change Orders, shall be void and without effect, and the Contractor shall not be entitled to any claim under this Contract based on those changes.

6.2. Subcontracts. The Contractor shall not enter into any subcontract under this Contract without the advance written approval of the Procurement Officer. The subcontract shall incorporate by reference all material and applicable terms and conditions of this Contract.

6.3. Assignments and Delegation. The Contractor shall not assign any right nor delegate any duty under this Contract without the prior written approval of the Procurement Officer. The State shall not unreasonably withhold approval.

7. Risk and Liability

7.1. Risk of Loss. The Contractor shall bear all loss of conforming material covered under this Contract until received and accepted by authorized personnel at the location designated in the Purchase Order, Change Order or Contract. Mere receipt does not constitute final acceptance. The risk of loss for nonconforming materials shall remain with the Contractor regardless of receipt.

7.2. Mutual Indemnification. Each party (as "indemnitor") agrees to indemnify, defend and hold harmless the other party (as "indemnitee") from and against any and all claims, losses, liability, costs or expenses (including reasonable attorney's fees) (hereinafter collectively referred to as "claims") arising out of bodily injury of any person (including death) or property damage, but only to the extent that such claims, which result in vicarious/derivative liability to the indemnitee, are caused by the act, omission, negligence, misconduct, or other fault of the indemnitor, its officers, officials, agents, employees or volunteers.

7.3. Force Majeure.

7.3.1. *Liability and Definition*. Except for payment of sums due, neither party shall be liable to the other nor deemed in default under this Contract if and to the extent that such party's performance of this Contract is prevented by reason of force majeure. The term "*force majeure*" means an occurrence that is beyond the control of the party affected and occurs without its fault or negligence. Without limiting the foregoing, force majeure includes acts of God; acts of the public enemy; acts of terrorism; war; riots; strikes; mobilization; labor disputes; civil disorders; fire; flood; lockouts; injunctions-interventions not caused by or resulting from the act or failure to act of the parties; failures or refusals to act by government authority not caused by or resulting from the act or failure to act of the parties; and other similar occurrences beyond the control of the party declaring force majeure, which such party is unable to prevent by exercising reasonable diligence.

7.3.2. *Exclusions*. Force Majeure shall not include the following occurrences:

7.3.2.1. Late delivery of Materials caused by congestion at a manufacturer's plant or elsewhere, or an oversold condition of the market;

7.3.2.2. Late performance by a subcontractor unless the delay arises out of a force majeure occurrence in accordance with this force majeure term and condition; or

7.3.2.3. Inability of either the Contractor or any subcontractor to acquire or maintain any required insurance, bonds, licenses or permits.

7.3.3. *Notice*. If either party is delayed at any time in the progress of the work by force majeure, the delayed party shall notify the other party in writing of such delay, as soon as is practicable and no later than the following working day of the commencement thereof, and shall specify the causes of such delay in such notice. Such notice shall be delivered or mailed certified-return receipt and shall make a specific reference to this article, thereby invoking its provisions. The delayed party shall cause such delay to cease as soon as practicable and shall notify the other party in writing when it has done so. The time of completion shall be extended by Contract Amendment for a period of time equal to the time that the results or effects of such delay prevent the delayed party from performing in accordance with this Contract.

7.3.4. *Default*. Any delay or failure in performance by either party hereto shall not constitute default hereunder or give rise to any claim for damages or loss of anticipated profits if, and to the extent that, such delay or failure is caused by force majeure.

7.4. Third Party Antitrust Violations. The Contractor assigns to the State any claim for overcharges resulting from antitrust violations to the extent that those violations concern materials or services supplied by third parties to the Contractor for or toward the fulfillment of this Contract.

8. Description of Materials The following provisions shall apply to Materials only:

8.1. Liens. The Contractor agrees that the Materials supplied under this Contract are free of liens. In the event the Materials are not free of liens, Contractor shall pay to remove the lien and any associated damages or replace the Materials with Materials free of liens.

8.2. Quality. Unless otherwise modified elsewhere in these terms and conditions, the Contractor agrees that, for

one year after acceptance by the State of the Materials, they shall be:

8.2.1. Of a quality to pass without objection in the Contract description;

8.2.2. Fit for the intended purposes for which the Materials are used;

8.2.3. Within the variations permitted by the Contract and are of even kind, quantity, and quality within each unit and among all units;

8.2.4. Adequately contained, packaged and marked as the Contract may require; and

8.2.5. Conform to the written promises or affirmations of fact made by the Contractor.

8.3. Inspection/Testing. Subparagraphs 8.1 through 8.2 of this paragraph are not affected by inspection or testing of or payment for the Materials by the State.

8.4. Compliance With Applicable Laws. The Materials and services supplied under this Contract shall comply with all applicable federal, state and local laws, and the Contractor shall maintain all applicable license and permit requirements.

8.5. Survival of Rights and Obligations After Contract Expiration and Termination.

8.5.1. *Contractor's Representations.* All representations and warranties made by the Contractor under this Contract in paragraphs 7 and 8 shall survive the expiration or termination hereof. In addition, the parties hereto acknowledge that pursuant to A.R.S. § 12.510, except as provided in A.R.S. § 12-529, the State is not subject to or barred by any limitations of actions prescribed in A.R.S. Title 12, Chapter 5.

8.5.2. *Purchase Orders and Change Orders.* Unless otherwise directed in writing by the Procurement Officer, the Contractor shall fully perform and shall be obligated to comply with all Purchase Orders and Change Orders received by the Contractor prior to the expiration or termination hereof, including, without limitation, all Purchase Orders and Change Orders received prior to but not fully performed and satisfied at the expiration or termination of this Contract.

9. State's Contractual Remedies

9.1. Right to Assurance. If the State, in good faith, has reason to believe that the Contractor does not intend to, or is unable to, perform or continue performing under this Contract, the Procurement Officer may demand in writing that the Contractor give a written assurance of intent to perform. Failure by the Contractor to provide written assurance within the number of Days specified in the demand may, at the State's option, be the basis for terminating the Contract.

9.2. Stop Work Order.

9.2.1. *Terms.* The State may, at any time, by written order to the Contractor, require the Contractor to stop all or any part of the work called for by this Contract for a period up to ninety (90) Days after the order is delivered to the Contractor, and for any further period to which the parties may agree. The order shall be specifically identified as a stop work order issued under this clause. Upon receipt of the order, the Contractor shall immediately comply with its terms and take all reasonable steps to minimize the incurrence of costs allocable to the work covered by the order during the period of work stoppage.

9.2.2. *Cancellation or Expiration.* If a stop work order issued under this clause is canceled or the period of the order or any extension expires, the Contractor shall resume work. The Procurement Officer shall make an equitable adjustment in the delivery schedule or Contract price, or both, and the Contract shall be amended in writing accordingly.

9.3. Non-exclusive Remedies. The rights and remedies of ADHS under this Contract are not exclusive, and ADHS is entitled to all rights and remedies available to it, including those under the Arizona Uniform Commercial Code and Arizona common law.

9.4. Right of Offset. The State shall be entitled to offset against any sums due the Contractor in any Contract with the State or damages assessed by the State because of the Contractor's non-conforming performance or failure to perform this Contract. The right to offset may include, but is not limited to, a deduction from an unpaid balance and a collection against the bid and/or performance bonds. Any offset taken for damages assessed by the State shall represent a fair and reasonable amount for the actual damages and shall not be a penalty for non-performance.

10. Contract Termination

10.1. Cancellation for Conflict of Interest. Pursuant to A.R.S. § 38-511, the State may cancel this Contract within three (3) years after Contract execution without penalty or further obligation if any person significantly involved in initiating, negotiating, securing, drafting or creating the Contract on behalf of the State is, or becomes at any time while the Contract or an extension of the Contract is in effect, an employee of or a consultant to any other party to this Contract with respect to the subject matter of the Contract. The cancellation shall be effective when the Contractor receives written notice of the cancellation, unless the notice specifies a later time. If the Contractor is a political subdivision of the State, it may also cancel this Contract as provided in A.R.S. § 38-511.

10.2. Gratuities. The State may, by written notice, terminate this Contract, in whole or in part, if the State determines that employment or a Gratuity was offered or made by the Contractor or a representative of the Contractor to any officer or employee of the State for the purpose of influencing the outcome of the procurement, securing the Contract or an Amendment to the Contract, or receiving favorable treatment concerning the Contract, including the making of any determination or decision about Contract performance. The State, in addition to any other rights or remedies, shall be entitled to recover exemplary damages in the amount of three times the value of the Gratuity offered by the Contractor.

10.3. Suspension or Debarment. The State may, by written notice to the Contractor, immediately terminate this Contract if the State determines that the Contractor or its subcontractor has been debarred, suspended or otherwise lawfully prohibited from participating in any public procurement activity, including but not limited to, being disapproved as a subcontractor of any public procurement unit or other governmental body.

10.4. Termination Without Cause.

10.4.1. Both the State and the Contractor may terminate this Contract at any time with thirty (30) days' notice in writing specifying the termination date. Such notices shall be given by personal delivery or by certified mail, return receipt requested.

10.4.2. If the Contractor terminates this Contract, any monies prepaid by the State, for which no service or benefit was received by the State, shall be refunded to the State within 5 days of the termination notice. In addition, if the Contractor terminates the Contract, the Contractor shall indemnify the State for any sanctions imposed by the funding source as a result of the Contractor's failure to complete the Contract.

10.4.3. If the State terminates this Contact pursuant to this Section, the State shall pay the Contractor the Contract price for all Services and Materials completed up to the date of termination. In a fixed price contract, the State shall pay the amount owed for the Services or Materials by multiplying the unit of service or item cost by the number of unpaid service units or items. In a cost reimbursement contract, the ADHS shall pay for any costs that the Contractor can document as having been paid by the Contractor and approved by ADHS. In addition, the Contractor will be paid its reasonable actual costs for work in progress as determined by Generally Accepted Accounting Principles

(GAAP) up to the date of termination. Upon such termination, the Contractor shall deliver to the ADHS all deliverables completed. ADHS may require Contractor to negotiate the terms of any remaining deliverables still due.

10.5. Mutual Termination. This Contract may be terminated by mutual written agreement of the parties specifying the termination date and the terms for disposition of property and, as necessary, submission of required deliverables and payment therein.

10.6. Termination for Default. The State reserves the right to terminate the Contract in whole or in part due to the failure of the Contractor to comply with any material obligation, term or condition of the Contract, to acquire and maintain all required insurance policies, bonds, licenses and permits, or to make satisfactory progress in performing the Contract. In the event the ADHS terminates the Contract in whole or in part as provided in this paragraph, the ADHS may procure, upon such terms and in such manner as deemed appropriate, Services or Materials, similar to those terminated, and Contractor shall be liable to the ADHS for any excess costs incurred by the ADHS in obtaining such similar Services or Materials.

10.7. Continuation of Performance Through Termination. Upon receipt of the notice of termination and until the effective date of the notice of termination, the Contractor shall perform work consistent with the requirements of the Contract and, if applicable, in accordance with a written transition plan approved by the ADHS. If the Contract is terminated in part, the Contractor shall continue to perform the Contract to the extent not terminated. After receiving the notice of termination, the Contractor shall immediately notify all subcontractors, in writing, to stop work on the effective date of termination, and on the effective date of termination, the Contractor and subcontractors shall stop all work.

10.8. Disposition of Property. Upon termination of this Contract, all property of the State, as defined herein, shall be delivered to the ADHS upon demand.

11. Arbitration

Pursuant to A.R.S. § 12-1518, disputes under this Contract shall be resolved through the use of arbitration when the case or lawsuit is subject to mandatory arbitration pursuant to rules adopted under A.R.S. § 12 -133.

12. Communication

12.1. Program Report. When reports are required by the Contract, the Contractor shall provide them in the format approved by ADHS.

12.2. Information and Coordination. The State will provide information to the Contractor pertaining to activities that affect the Contractor's delivery of services, and the Contractor shall be responsible for coordinating their activities with the State's in such a manner as not to conflict or unnecessarily duplicate the State's activities. As the work of the Contractor progresses, advice and information on matters covered by the Contract shall be made available by the Contractor to the State throughout the effective period of the Contract.

13. Client Grievances

If applicable, the Contractor and its subcontractors shall use a procedure through which clients may present grievances about the operation of the program that result in the denial, suspension or reduction of services provided pursuant to this Contract and which is acceptable to and approved by the State.

14. Sovereign Immunity

Pursuant to A.R.S. § 41-621(O), the obtaining of insurance by the State shall not be a waiver of any sovereign immunity defense in the event of suit.

15. Administrative Changes

The Procurement Officer, or authorized designee, reserves the right to correct any obvious clerical, typographical or grammatical errors, as well as errors in party contact information (collectively, "Administrative Changes"), prior to or after the final execution of a Contract or Contract Amendment. Administrative Changes subject to permissible corrections include: misspellings, grammar errors, incorrect addresses, incorrect Contract Amendment numbers, pagination and citation errors, mistakes in the labeling of the rate as either extended or unit, and calendar date errors that are illogical due to typographical error. The Procurement Office shall subsequently send to the Contractor notice of corrections to administrative errors in a written confirmation letter with a copy of the corrected Administrative Change attached.

16. Survival of Terms After Termination or Cancellation of Contract

All applicable Contract terms shall survive and apply after Contract termination or cancellation to the extent necessary for Contractor to complete and for the ADHS to receive and accept any final deliverables that are due after the date of the termination or cancellation.

17. Health Insurance Portability and Accountability Act of 1996 (HIPAA)

17.1. The Contractor warrants that it is familiar with the requirements of HIPAA, as amended by the Health Information Technology for Economic and Clinical Health Act (HITECH Act) of 2009, and accompanying regulations and will comply with all applicable HIPAA requirements in the course of this Contract. Contractor warrants that it will cooperate with the Arizona Department of Health Services (ADHS) in the course of performance of the Contract so that both ADHS and Contractor will be in compliance with HIPAA, including cooperation and coordination with the Arizona Department of Administration-Arizona Strategic Enterprise Technology (ADOA-ASET) Office, the ADOA-ASET Arizona State Chief Information Security Officer and HIPAA Coordinator and other compliance officials required by HIPAA and its regulations. Contractor will sign any documents that are reasonably necessary to keep ADHS and Contractor in compliance with HIPAA, including, but not limited to, business associate agreements.

17.2. If requested by the ADHS Procurement Office, Contractor agrees to sign a "Pledge To Protect Confidential Information" and to abide by the statements addressing the creation, use and disclosure of confidential information, including information designated as protected health information and all other confidential or sensitive information as defined in policy. In addition, if requested, Contractor agrees to attend or participate in HIPAA training offered by ADHS or to provide written verification that the Contractor has attended or participated in job related HIPAA training that is: (1) intended to make the Contractor proficient in HIPAA for purposes of performing the services required and (2) presented by a HIPAA Privacy Officer or other person or program knowledgeable and experienced in HIPAA and who has been approved by the ADOA-ASET Arizona State Chief Information Security Officer and HIPAA Coordinator.

18. Comments Welcome

The ADHS Procurement Office periodically reviews the Uniform Terms and Conditions and welcomes any comments you may have. Please submit your comments to: ADHS Procurement Administrator, Arizona Department of Health Services, 150 North 18th Avenue, Suite 280, Phoenix, Arizona 85007.

19. Data Universal Numbering System (DUNS) Requirement

For federal funding, pursuant to 2 CFR 25.100 et seq., no entity (defined as a Governmental organization, which is a State, local government, or Indian tribe; foreign public entity; domestic or foreign nonprofit organization; domestic or foreign for-profit organization; or Federal agency, but only as a subrecipient under an award or subaward to a non-Federal entity) may receive a subaward from ADHS unless the entity provides its Data Universal Numbering System (DUNS) Number to ADHS.

20. The Federal Funding Accountability and Transparency Act (FFATA or Transparency Act - P.L.109-282, as amended by section 6202(a) of P.L. 110-252), found at https://www.fsrs.gov/

If applicable, the Contractor/Grantee shall submit to ADHS via email the Grant Reporting Certification Form. This

form and the instructions can be downloaded from the ADHS Procurement website at http://www.azdhs.gov/operations/financial-services/procurement/index.php#ffata and must be returned to the ADHS by the 15th of the month following that in which the award was received. The form shall be completed electronically, and submitted using the steps outlined in the Grant Reporting Certification Form Instructions to the following email address: ADHS_Grant@azdhs.gov. All required fields must be filled including Top Employee Compensation, if applicable. Completing the Grant Reporting Certification Form is required for compliance with the Office of Management and Budget (OMB), found at http://www.whitehouse.gov/omb/open. Failure to timely submit the Grant Reporting Certification Form could result in the loss of funds. This requirement applies to all subcontractors/sub-awardees utilized by the Contractor/Grantee for amounts exceeding $30,000.00 during the term of the Award.

21. Contracting; Procurement; Investment; Prohibitions

21.1. A public entity may not enter into a contract with a company to acquire or dispose of services, supplies, information technology or construction unless the contract includes a written certification that the company is not currently engaged in, and agrees for the duration of the contract to not engage in, a boycott of Israel.

21.2. A public entity may not adopt a procurement, investment or other policy that has the effect of inducing or requiring a person or company to boycott Israel.

21.3. Contractor hereby certifies that it is not currently engaged in, and will not for the duration of this Contract engage in, a boycott of Israel as defined by A.R.S. § 35-393.01. Violation of this certification by Contractor may result in action by the State up to and including termination of this Contract.

1. Background

The Arizona Immunization Program Office (AIPO) has contracted with County Health Departments since 1993 to provide immunization-related services. The Scope of Services reflects activities necessary to reach the national immunization goals and objectives outlined by the Centers for Disease Control and Prevention (CDC) and the Healthy People website, www.healthpeople.gov. All objectives and related activities identified in this Scope of Services include the Contractor as well as all public health entities involved with immunizations within the Contractor's jurisdiction.

2. Objective

2.1. Enhance program stewardship and accountability for all publicly-purchased vaccine in support of the Vaccines for Children Program (VFC) and the Vaccines for Adults Program (VFA);

2.2. Provide vaccines to children and adults in accordance with recommendations of the Centers for Disease Control and Prevention's (CDC) Advisory Committee on Immunization Practices (ACIP);

2.3. Assess and improve immunization coverage levels for children and adults;

2.4. Assure access to vaccines for eligible populations in Arizona; and

2.5. Prevent and control Vaccine-Preventable Diseases (VPD).

3. Scope of Service

The services shall be provided throughout the Contractor's jurisdiction. The Tasks described herein are provided to outline the services required. The tasks, activities and deliverables shall be performed according to the state fiscal funding year of July - June.

4. Tasks

The Contractor shall provide:

4.1. Activity One (1) Immunization Action Plan (IAP)

4.1.1. Develop and implement an annual IAP to ensure that immunization coverage levels in the County's child, adolescent, and adult populations improve for both public and private health care recipients. Evidence-based strategies can be taken from the "Guide to Community Preventive Services" at http://thecommunityguide.org/vaccine. At a minimum, the IAP must contain the following:

4.1.1.1. The current delivery method of immunization services in the public sector to include the number of immunization clinics, the location of clinics, the dates and times of clinics, and documentation of any changes made to delivery services for the purpose of increasing immunization coverage levels;

4.1.1.2. The identified strategies to assist and coordinate efforts to provide immunizations to the community, to include county-specific time frames and process for conducting Reminder/Recall activities;

4.1.1.3. The identification of low or lagging vaccination coverage among children, adolescents, adults, special populations and pockets of need relevant to Contractor's jurisdiction, using best available evidence and data including State reports and locally gathered statistics; and

4.1.1.4. A description of how activities will accomplish the objectives and tasks within this Scope of Work and address low or lagging coverage rates.

4.1.2. Share the IAP and Assessment Feedback Incentive and eXchange (AFIX) Assessment Report results with the Medical Director, Local Health Officer (LHO), and/or other staff for review and/or approval as dictated by county health department protocol.

4.2. Activity Two (2) Child and Adolescent Immunizations

4.2.1. Collaborate with public and private sector organizations, such as the Special Supplemental Nutrition Program for Women, Infants, and Children (WIC), to promote child and adolescent immunizations in an effort to raise coverage levels, striving to reach Healthy People immunization rates located at www.healthypeople.gov. The Contractor shall:

4.2.1.1. Be enrolled as a Vaccines for Children (VFC) provider and comply with the program requirements as defined in the Arizona VFC Program Provider Enrollment Agreement, the Arizona VFC Operations Guide and AIPO directives on appropriate use of 317 funded vaccine;

4.2.1.2. Be responsible for compliance with VFC storage, handling, and administration requirements and for preventing any loss or wastage of its vaccine used in clinics sites or other venues;

4.2.1.3. Provide immunizations to eligible children and adolescents, zero through eighteen (0-18) years of age, in accordance with ACIP recommendations;

4.2.1.4. Distribute an immunization record to those who are immunized; may use the Arizona Lifetime Immunization Record Card (LIRC), an immunization record produced from ASIIS, or a record produced from a county-specific software program. The LIRC may be ordered by using SMARTworks or by using the Forms Request Order form located at http://www.azdhs.gov/phs/immunization/vaccines-for-children/index.php?pg=forms;

4.2.1.5. In collaboration with AIPO staff, participate in and complete an annual on-site VFC compliance visit of contractor clinics/sites that receive publicly purchased vaccine from the State. The Contractor shall use *The Standards for Child and Adolescent Immunization Practices* located at http://www.hhs.gov/nvpo/nvac/standar.html to assist with development of clinic policy and procedures. The compliance visit shall include:

4.2.1.5.1. A review of clinic immunization practices (documentation) and clinic vaccine management practices, to include ordering, inventory management, storage and handling, checking for VFC eligibility and reporting data to ASIIS;

4.2.1.6. Participate, when able, in The Arizona Partnership for Immunization (TAPI) coalition's Community Awareness and Provider Awareness committees.

4.3. Activity Three (3) Adult Immunizations

4.3.1. Collaborate with public and private sector organizations, as funding and vaccines become available, to promote adult immunizations in an effort to raise adult immunization coverage levels, striving to reach Healthy People immunization rates located at www.healthypeople.gov. The Contractor shall:

4.3.1.1. If participating in the Vaccines for Adults (VFA) program, be enrolled as a VFA provider and comply with the program requirements as defined in the Arizona VFA Program Provider Enrollment Agreement, the Arizona VFA Operations Guide and AIPO directives on appropriate use of 317 funded vaccine;

4.3.1.2. Be responsible for compliance with VFA storage, handling, and administration requirements and for preventing any loss or wastage of its vaccine used in clinics, sites, or other venues;

4.3.1.3. Provide immunizations to eligible adults, nineteen years of age and older (19+), in accordance with ACIP recommendations;

4.3.1.4. Distribute an immunization record to those who are immunized; may use the Arizona Lifetime Immunization Record Card (LIRC), an immunization record produced from ASIIS, or a record produced from a county-specific software program. The LIRC may be ordered by using SMARTworks or by using the Forms Request Order form located at http://www.azdhs.gov/phs/immunization/vaccines-for-children/index.php?pg=forms;

4.3.1.5. Use the Standards for Adult Immunization Practices to develop and implement strategies to increase immunization rates of special adult populations, such as, but not limited to, college students, educators, healthcare workers, and child care employees;

4.3.1.6. In collaboration with AIPO staff, participate in and complete an annual on-site VFA compliance visit of contractor clinics/sites that receive publicly purchased vaccine from the State. The Contractor shall use *The Standards for Adult Immunization Practices* located at http://www.cdc.gov/vaccines/hcp/patient-ed/adults/for-practice/standards/to assist with development of clinic policy and procedures. The compliance visit shall include:

4.3.1.6.1. A review of clinic immunization practices (documentation) and clinic vaccine management practices, to include ordering, inventory management, storage and handling, checking for VFA eligibility and reporting data to ASIIS.

4.3.1.7. Participate, when able, in The Arizona Partnership for Immunization (TAPI) coalition's Community Awareness and Provider Awareness committees.

4.4. Activity Four (4) Arizona State Immunization Information System (ASIIS)

4.4.1. Enroll in ASIIS (https://asiis.azdhs.gov) and use this state registry system to place publicly-purchased vaccine orders; manage inventory of publicly-purchased vaccine; report, within thirty (30) days of administration date, immunizations administered to all children and adults who consent to entry into ASIIS; and retrieve information reported by other Arizona providers.

4.4.1.1. Adhere to ARS 36-135, ARS 36-674, and Arizona Administrative Code (AAC) R9-6-701-708 and R9-5-304-305 located at:
http://www.azleg.gov/ArizonaRevisedStatutes.asp ; and
http://www.azsos.gov/public_services/table_of_contents.htm;

4.4.1.2. Adhere to guidelines posted at the Arizona State Immunization Information System, (ASIIS) website (http://azdhs.gov/phs/asiis/);

4.4.1.3. Refer to the Vaccines for Children (VFC) and Vaccines for Adults (VFA) Operations Guides;

4.4.1.4. Ensure internet access for program personnel who will be using ASIIS;

4.4.1.5. Submit any and all immunization staff changes to ASIIS. Staff members who are no longer employed by the Contractor will be inactivated. Contractor will use the most current VFC/VFA Profile Change Form when submitting changes. The ASIIS Pledge to

Protect Confidential Information form is verified online annually through the ASIIS system.

4.5. Activity Five (5) AFIX Assessment Reports

4.5.1. AIPO will prepare and provide to the Contractor, on an annual basis, an Initial Assessment Report and a Follow-up Assessment Report (6 months after initial). Any subsequent follow-up that is indicated may occur any time after the first follow-up assessment. The Contractor shall review the AFIX Initial and Follow-up Assessment Reports, which provide data analysis of the immunization rates of children (24-35 months of age) and adolescents (13-18 years of age) immunized at the Contractor's clinic sites. These reports can be used to pinpoint strengths and areas of improvement. Results of the reports will be shared with clinic staff to identify:

4.5.1.1. Missed opportunities to immunize;

4.5.1.2. Invalid doses;

4.5.1.3. Missing immunizations;

4.5.1.4. Coverage levels; and

4.5.1.5. Continuous Quality Improvement (CQI) strategies to follow-up with under-immunized clients and to improve coverage levels.

4.5.2. Provide follow-up on all children and adolescents who were identified as not up-to-date during the AFIX Initial Assessment Report. The Contractor shall utilize a reminder system such as:

4.5.2.1. ASIIS Reminder/Recall;

4.5.2.2. Postcards;

4.5.2.3. Automated Phone Calling;

4.5.2.4. Staff telephone calls;

4.5.2.5. Texting; and/or

4.5.2.6. Other.

4.6. Activity Six (6) Reminder/Recall Activities

4.6.1. Conduct Reminder/Recall activities within time frames identified by the contractor in the IAP. Reminder/Recall activities will include notification to parents/guardians of all children and adolescents served by the county. These activities will include, but not be limited to, reminders of when the next vaccination visit is due, as well as recall of any children and adolescents who are overdue for vaccinations, or who have missed an immunization visit;

4.6.2. May conduct Reminder/Recall activities for adults served by the County. These activities may include, but not be limited to, reminders of when the next vaccination visit is due, as well as recall of any adults who are overdue for vaccinations, or who have missed an immunization visit;

4.6.3. Report Reminder/Recall activities and efforts in the Quarterly Progress Report and make reports available to AIPO during any compliance and/or review visits.

4.7. Activity Seven (7) Perinatal Hepatitis B Case Management

4.7.1. Implement Perinatal Hepatitis B program activities designed to prevent the spread of the hepatitis B virus (HBV) from mother to newborn. The contractor shall comply with Chapter Eight (8) of the Perinatal Hepatitis B Prevention Program Manual (http://azdhs.gov/phs/immunization/perinatal-hepatitis-b.htm). Office of Infectious Disease Services (OIDS) will provide the Contractor with county-specific information on HBsAg-positive (HBsAg+) identified pregnant women and infants. The Contractor shall then conduct the following activities and provide the state Perinatal Hepatitis B program with data on case management and services provided to the County's perinatal hepatitis B cases:

4.7.1.1. Provide high-risk case management, including home visits if necessary, to assure that all infants born to HBsAg+ mothers (including infants born to mothers whose HBV status is unknown) are offered appropriate prophylactic treatment after birth;

4.7.1.2. Provide high-risk case management, including home visits if necessary, to assure infants born to positive mothers receive time appropriate subsequent doses of hepatitis B vaccine and receive post vaccination serologic testing (PVST) at nine to twelve (9-12) months of age (or 1-2 months after the final dose of the vaccine series, if the series is delayed);

4.7.1.3. Implement measures to assure that all identified household/sexual contacts of HBsAg+ mothers in the County are offered testing (to include HBsAg and anti-HBs) for susceptibility and immunized if susceptible; and

4.7.1.4. Report to OIDS, at least quarterly, in a Department-provided format, data specified in Chapter eight (8) of the Perinatal B Prevention Program Manual on HBsAg+ women, their contacts, and infants born to HBsAg+ women.

4.8. Activity Eight (8) Community Outreach Education

4.8.1. Promote immunizations, in partnership with public and private sector organizations, by using educational materials, social media, newsletters, communicable disease bulletins, websites, email list services, and other outreach methods. Document these activities in the Quarterly Progress Report;

4.8.2. Conduct activities, as staffing allows, at immunization clinics to promote and increase attendance of children, adolescents, and adults, as appropriate, during events such as National Infant Immunization Week (NIIW) in April, Child Health Month (October), National Immunization Awareness Month (August), Influenza Vaccination Week (December), and other immunization promotional events. Document these activities in the Quarterly Progress Report;

4.8.3. When possible, include copies or samples of promotional efforts and activities (flyers, website postings, advertisements, etc.) with the Quarterly Progress Report and/or make available to AIPO during any compliance and/or review visits.

4.9. Activity Nine (9) Healthcare Provider Education

4.9.1. Coordinate and/or provide, upon request or identified need, immunization education programs for staff of private medical offices and clinics, hospitals, schools, or other immunization administration sites. Suggested program topics include, but are not limited to, vaccine administration, immunization schedules, immunization assessments, immunization registry/tracking, and vaccine storage and handling;

4.9.2. If education is provided, document these activities in the Quarterly Progress Reports;

4.9.3. Attendance sheets and/or program agenda and handouts will be retained by the Immunization Coordinator for a minimum of two (2) years and are to be made available to AIPO during any compliance and/or review visits.

4.10. Activity Ten (10) CHD Immunization Staff Education

4.10.1. Ensure that immunization program staff members view the CDC Epidemiological and Prevention of Vaccine-Preventable Diseases (Pink Book) program upon orientation;

4.10.2. Share immunization information received from ADHS, CDC, TAPI and/or other agencies with immunization program staff members;

4.10.3. Ensure that, on a yearly (reporting year) basis, the County Immunization Program Coordinator, or appropriate substitute, attends or participates in four (4) quarterly Immunization Services Meetings (ISM) conducted by AIPO, a minimum of one (1) state or national immunization conference, and one (1) additional immunization education program offered in person or remotely by ADHS, CDC, or other recognized community, local, state or federal immunization partner;

4.10.4. Maintain staff records of education course attendance/completions for a minimum of two (2) years. Course completion certificates may be obtained from the entity or facility providing the education or may be on a county-specific form.

4.11. Activity Eleven (11) Vaccine Adverse Event Reporting System (VAERS)

4.11.1. Comply with the immunization provider responsibilities as defined in the National Childhood Vaccine Injury Act located at: http://www.cdc.gov/vaccinesafety/ensuringsafety/history/index.html/.

4.11.1.1. Submit reports of adverse reactions or events that occurred specific to the Contractor's vaccine administration sites to the electronic VAERS located at: http://vaers.hhs.gov/index/ within seventy-two (72) hours of notification of the adverse event;

4.11.1.2. Submit a copy of the electronic VAERS report and any follow-up reports to AIPO; and

4.11.1.3. Follow-up on any reports as requested by CDC or AIPO.

4.12. Activity Twelve (12) VPD Outbreak and Pandemic Preparedness

4.12.1. The Contractor will assist in VPD outbreaks and pandemic responses in coordination with equivalent county public health preparedness programs and other relevant partners. Immunization staff will contribute, when asked, to the development or revision of county public health preparedness program response plans. Preparedness activities may include mass vaccination exercises, identification of priority groups and hard-to-reach populations for immunization, and identification of critical infrastructure personnel.

4.13. Activity Thirteen (13) (At the Contractor's Option) School/Child Care Immunization Data Reports (IDRs)

4.13.1. It is the responsibility of schools and child care facilities to complete and submit the annual Immunization Data Report (IDRs) to AIPO. The Contractor is encouraged, when able, to support and work directly with school and child care facilities to improve compliance with state immunization requirements as specified by the Arizona Revised Statutes and Arizona Administrative Code, and assist with the submission of required reports in the format prescribed by AIPO/ADHS and posted at http://azdhs.gov/phs/immunization/school-childcare/data-reports.htm. IDR data is posted on the ADHS website, but upon request, AIPO will provide the

Contractor with a list of county-specific schools and child care centers that might need assistance with compliance or have not submitted the IDR. Assistance may include on-site visits to provide education and technical support. If on-site assistance is provided, the Contractor shall incorporate one or more of the following tasks:

4.13.1.1. Review immunization records;

4.13.1.2. Assist the site in completing a "Referral Notice of Inadequate Immunization" for each under-immunized child;

4.13.1.3. Complete and submit the site's IDR for each grade level as required by AIPO/ADHS.

4.14. Activity Fourteen (14) (At the Contractor's Option) Immunization Data Report (IDR) Validation

4.14.1. Support AIPO/ADHS, if able, in completing CDC-selected school and/or child care IDR validations. Work will include on-site visits to assess the immunization status of each state-required immunization for 30 randomly-selected students within the designated grade. Contractor will also note the number and types of exemptions and if exemptions are completed and valid (submitted on state-approved forms.) Data shall be collected on a standard form provided by AIPO. Data shall be sent to AIPO to consolidate for state validation.

5. Requirements

The activities in this Contract shall be performed by the Contractor, or its partners, for the purpose of increasing immunization coverage levels of children 0 through 18 years of age and adults 19 years of age and older in both the public and private sectors of health care. Funds shall be used for immunization- related services and activities and in accordance with any federal and state regulations.

6. Deliverables

The Contractor shall:

6.1. Complete and submit, within thirty (30) days (but no later than 45 days) of the new reporting year, an Annual Immunization Action Plan (IAP);

6.2. Complete and submit, within thirty (30) days (but no later than 45 days) of the end of each quarter, a quarterly Contractor's Expenditure Report (CER), with supporting documentation, listing all immunization activities and reports for which reimbursement is due. The Contractor is expected to use the funds received from the CER for immunization-related services and activities and in accordance with federal and state regulations;

6.3. Complete and submit, within thirty (30) days (but no later than 45 days) of the end of each quarter, a Quarterly Progress Report.

7. Notices, Correspondence, and Reports

7.1. Notices, correspondence, reports and invoices/CERs from the contractor to ADHS shall be sent to:

Immunization Services Manager
Immunization Program Office
Arizona Department of Health Services
150 N. 18th Avenue, Suite 120
Phoenix AZ 85007
Telephone: 602:364-3626
FAX: 602:364-3285

7.2. Notices, correspondence, and reports (and payments if sent to same address) from ADHS to the contractor shall be sent to:

Gila County Division of Health & Emergency Services
5515 South Apache Ave., Suite 100
Mailing Address: 1400 East Ash
Globe, AZ 85501
Phone: 928-402-8767
Fax: 928-425-0794

Activity	Frequency	Unit Rate	Unit of Measure	Total
Total Personnel/ERE; Salary/Fringe – May claim only salary and fringe benefits for immunization program staff/other staff who work to meet contract requirements	Yearly	N/A	Total	Up to $50,000.00
Immunization Visit for children zero (0) to eighteen (18) years of age who meet VFC eligibility requirements. Do not include visits for insured children.	Quarterly	$50.00	Per Visit	As approved by ADHS and authorized by purchase order
Immunization Visit for adults nineteen (19) years of age and older who meet VFA eligibility requirements. Do not include visits for insured adults	Quarterly, when specific VFA funds are available	$50.00	Per Visit	
Immunization Completion report for children zero (0) to twenty-four (24) months of age for the 4:3:1:3:3:1:4 series	Quarterly	$100.00	Per Series Completion	
Perinatal Hepatitis B Case Management – Prenatal	Quarterly	$300.00	Per Case	
Perinatal Hepatitis B Case Management – Postnatal	Quarterly	$200.00	Per Case	
Immunization Visit for Flu Vaccine, in children and adults who meet VFC and VFA eligibility requirements. Do not include visits for insured children or adults.	When specific pan flu vaccine funds are available	$50.00	Per Visit	
IDR Submission – Preparation and Submittal of School/Child Care IDR by CHD nurse or in cooperation with school/child care personnel	Optional	$250.00	Each/per grade level IDR	
IDR Validation – On-site visit to schools/child care facilities to validate IDR submission data	Optional	$50.00	Each/per grade level validation	

*Prices may be reviewed and adjusted annually over the term of the contract.

Scheduled Reports Delivery

Reports	Due Date (based on State Fiscal Year Funding of July – June)
Immunization Action Plan (IAP)	August 30 (September 15)
Quarterly Progress Reports	1st Qtr – October 30 (Nov 15) 2nd Qtr – January 30 (Feb 15) 3rd Qtr – April 30 (May 15) 4th Qtr – July 30 (Aug 15)
Contractor Expenditure Report (CER) to include pertinent documentation, such as Hepatitis B Line Listing Reports, VFC and VFA visit reports, completion/coverage level reports, IDR Submission form/copies, IDR Validation for	1st Qtr – October 30 (Nov 15) 2nd Qtr – January 30 (Feb 15) 3rd Qtr – April 30 (May 15) 4th Qtr – July 30 (Aug 15)

Fee for Service Definitions

1. Fixed Price

1.1. Immunization Administration

1.1.1. "Immunization Visits Fee" is the rate paid to supplement the county-specific administration cost for each child immunization visit. The fee will only be applied to VFC and FVA eligible visits and should not be used for private insurance visits. When able, please use ASIIS reports such as the ASIIS Vaccines for Children Accountability Log, VFC Vaccination Breakdown Report, or the Vaccination Total Report as source documents when submitting the quarterly CER. CHDs may also use internal electronic medical report (EMR) documents to report visits.

1.1.2. "Completions" is the rate paid for each child who completes (receives valid dose of) four (4) DTaP, three (3) Polio, one (1) MMR, three (3) Hib, three (3) Hep B, and one (1) Varicella, and four (4) Pneumoccocal vaccines by twenty-four (24) months of age. Contractor is advised that this immunization completion series is subject to change based on future CDC and AIPO requirements or recommendations. When able, please use ASIIS reports such as ASIIS Coverage Data Report as source documents when submitting the quarterly CER.

1.2. Perinatal Hepatitis B Case Management

Perinatal Hepatitis B Case Management spans from the mother's initial interview through to completion of all preventive services for the infant and the household/sexual contacts. It is anticipated that cases should not take more than eighteen (18) months to complete.

Contract payment for each case will be paid in two increments, depending upon completion of prenatal and postnatal services:

1.2.1. "Pre-Natal Management" is the rate paid to include date of initial client interview, identification of household and sexual contacts, testing and/or immunization of contacts or documentation of previous services or refusal of services. All services will be reported in a Department-provided format. A report of services completed, in a Department-provided format, shall accompany the quarterly CER.

1.2.2. "Post-Natal Management" is the rate paid to include obtaining name of birth hospital, infant' s name, date of birth (DOB), birth weight, date of administration of HBIG and Hepatitis B #1, and the name of the infant's healthcare provider. The rate also includes obtaining subsequent dates for the remaining two (2) doses of Hepatitis B vaccine as well as the dates and results of post serology follow-up or documentation of refusal.

Per CDC guidelines (refer to Hepatitis B Manual identified in Activity 2.1) infants born to HBsAg positive mothers should receive Hepatitis #3 optimally by six (6) months of age (and more that 24 weeks) of age. All services will be reported in a Department-provided format. A report of services completed, on a Department-provided format, shall accompany the quarterly CER.

1.3. Immunization Data Report (IDR) Submission (Optional)

1.3.1. An "Immunization Data Report (IDR)" is an AIPO-designed form used to collect enrollment and immunization information from schools, child care centers, and Head Start Programs about children in an age group or at a grade level required by ADHS. Information about the IDR and a link to the survey site can be found on the AIPO website at http://www.azdhs.gov/phs/immunization/school-childcare/data-reports.htm. IDRs shall include the number of children enrolled, the number of enrolled children who have proof of each required immunization dose, and the number of enrolled children who have exemptions from state required immunizations. Schools and child care centers are required to submit an annual Immunization Data Report by November 15th per Arizona Revised Statutes 15-874, and Arizona Administrative Code, R9-6-707.

1.3.2. "Immunization Data Report Submission" is the rate compensated for submitting an IDR report per child care center or per grade level for a school. This rate includes at least one site visit to the school or child care center by the CHD nurse in cooperation with school/child care personnel, and documentation of the completed Immunization Data Report. Documentation of electronic submission is satisfied by indicating the following in the comments field of the IDR survey:

1) Name of the County personnel who assisted;
2) Time and Date of visit; or
3) Approximate time/hours of assistance provided.

1.4. Immunization Data Report Validation (Optional)

1.4.1. IDR Validation is a process by which state and/or county personnel visit a sample of schools and/or child care centers assigned by the Centers for Disease Control and Prevention – Assessment Branch and validate student immunization records. Thirty (30) students from the designated grade(s) are randomly chosen and the immunization status is recorded on a form designed by AIPO. AIPO then assesses aggregate validation data. AIPO traditionally uses 90% or 95% confidence interval with a minimum level of precision of 0.02 – 0.03.

1.4.1.1. IDR Validation is a rate compensated for completion and submission of an IDR Validation to AIPO per grade level for a school or child care center. This rate includes on site visit to the school or child care center by the County personnel and completion of validation. To be compensated for an IDR Validation, county personnel shall claim the number of audits completed on their CER. The CER data will be confirmed/verified by the AIPO Assessment Manager.

ARF-6281 **Regular Agenda Item 4. C.**

Regular BOS Meeting

Meeting Date:	10/06/2020		
Submitted For:	Homero Vela, Assistant County Manager		
Submitted By:	Betty Hurst, Contracts Administrator		
Department:	Finance		
Fiscal Year:	2021	Budgeted?:	Yes
Contract Dates Begin & End:	02-2021	Grant?:	No
Matching Requirement?:	No	Fund?:	Renewal

Information

Request/Subject

Contract Award for Request for Proposal No. 071320-*Master Plan for Broadband Phase 2 in Gila County.*

Background Information

Gila County has previously hired a consultant, EntryPoint, to provide conceptual network designs, a market analysis, website development, development of project plans and benchmarks, specification of inside and outside plant equipment, develop financial pro-forma based on the conceptual design, and assist with community outreach. The following have been completed:

- Visited with 6 cities and towns
- Developed a website and survey:
- Held numerous Community Broadband Team meetings
- Held discussions with APS, SRP, Sparklight, Coconino County, IDA
- Reviewed Improvement Districts and Cooperative concepts
- Analyzed 130 invoices from incumbent providers
- Mapped routing for APS, SRP, and Sparklight fiber routes
- Reviewed conceptual designs and conceptual financial pro-forma

- A report documenting these activities will be issued in the next month and will include conceptual cost and networks and conceptual financial pro-forma. This information will be fully

shared with a Kimley-Horn consultant.

This earlier contract was issued before the Arizona Commerce Authority granted Gila County a $50,000 grant and had a limited scope and cost. This additional funding will allow the County to go to the second level of detail in the planning process. The contract will include the RFP requirements as follows:

- Conduct a statistically valid survey of the communities to assess demand and interest in faster and more reliable connectivity.
- Update web site, social media channels and hold town hall meeting/webinars to educate residents on the project and get their input.
- Compare the various operational structure models (County ISP, Public-Private Partnership, Open Access, Cooperative, other) and propose a recommendation.
- Analyze the cost to connect County infrastructure to replace leased connections.
- Review cost models and designs to connect to the first mile, the internet exchange point, and evaluate opportunities to leverage the e-rate network.
- Layout middle-mile routes and high-level costs for middle mile.
- Develop a high-level last-mile design for the following:

  - Young
  - Pine-Strawberry
  - Rim Community ring
  - Tonto Basin
  - Review of grant opportunities
  - And all other requirements of the Request for Proposals (RFP).

<u>Evaluation</u>

The need exists to develop an affordable strategic broadband plan and prepare the roadmap for implementation. It is requested that the Board of Supervisors approve the contract with Kimley-Horn to develop high-level designs and plans for a County-wide broadband plan. The plans will serve to guide the County in determining the best way to proceed with the future implementation of broadband infrastructure. Kimley-Horn Consultant has prepared municipal and regional broadband infrastructure master plans for other communities in Arizona has offered a team that is experienced and qualified and has the necessary expertise

to develop a plan for Gila County.

Conclusion

It has long been evident that rural communities lag behind urban communities in broadband infrastructure. The COVID-19 pandemic shines a light on this disparity and brings a focus to the idea that our quality of life is dependent, in many aspects, to the quality of our internet connectivity. A strategic broadband plan will allow Gila County to submit for broadband grants and pursue an implementation plan. The County does not have the expertise to accomplish this project and is seeking a consultant who has a proven track record in broadband infrastructure development.

Recommendation

Kimley-Horn has the experience and staff to help Gila County finalize the broadband strategic plan. They are committed to complete the work by February of 2021. Staff recommends that the Board approve a contract with Kimley-Horn to provide the planning and implementation of all aspects of the Request for Proposal as it pertains to the Master Broadband Plan Phase 2 for an amount not to exceed $50,000.

Suggested Motion

Information/Discussion/Action to award a contract to Kimley-Horn in the amount of $50,000 in response to Request for Proposals No. 071320-*Master Broadband Plan Phase 2*, and authorize the Chairman's signature on the award contract. **(Homero Vela)**

Attachments

Professional Services Contract No. 071320

Attachment A

RFP 071320

Kimley-Horn Proposal

Entrypoint Proposal

Mission Broadband Proposal

PROFESSIONAL SERVICES CONTRACT NO. 071320

MASTER PLAN FOR BROADBAND PHASE 2 IN GILA COUNTY

ADMINISTRATION

THIS AGREEMENT, made and entered into this _____ day of _____**, 2020**, by and between Gila County, a political subdivision of the State of Arizona hereinafter designated the County, and Kimley-Horn and Associates, Inc., of the City of Phoenix, State of Arizona, hereinafter designated the Contractor.

WITNESSETH: The Contractor, for and in consideration of the sum to be paid him by the County, in the manner and at the time hereinafter provided, and of the other covenants and agreement's herein contained, hereby agrees, for himself, his heirs, administrators, successors, and assigns as follows:

ARTICLE 1 – SCOPE OF SERVICES: The Contractor shall provide the Services and products listed in the Scope of Work below and shall do so in a good, workmanlike and substantial manner and to the satisfaction of the County under the direction of the **Administration Department** or designee.

All work performed by the Contractor shall be completed to local codes and regulation per Gila County and the State of Arizona and consistent with all Gila County guidelines.

Scope of Work: Refer to attached Attachment "A" to **Professional Services Contract 071320** by mention made a binding part of this agreement as set forth herein.

Contractor Fee's: Refer to Attachment "A" to **Professional Services Contract 071320** by mention made a binding part of this agreement as set forth herein. To the extent that the terms and conditions of this Service Agreement conflict with the Terms and Conditions of Attachment "A" to **Professional Services Contract 071320**, the terms and conditions of this service agreement will prevail and govern the contractual relationship between the parties.

ARTICLE 2 – TERMINATION: The County reserves the right to terminate the Contract, in whole or in part at any time, when in the best interest of the County, without penalty or recourse. Upon receipt of the written notice, the Contractor shall stop all work as directed in the notice. If the contract is terminated, the County shall be liable only for the Services rendered under this contract and accepted material received by the County before the effective date of termination.

ARTICLE 3 - INDEMNIFICATION: To the extent permitted by law and subject to the limitations in Arizona Revised Statutes Section 34-226**,** Contractor shall indemnify, defend, save and hold harmless the County of Gila and its officers, officials, agents, and employees (hereinafter referred to as "Indemnitee") from and against any and all claims, actions, liabilities, damages, losses, or expenses (including court costs, attorneys' fees, and costs of claim processing, investigation and litigation) (hereinafter referred to as "Claims") for bodily injury or personal injury (including death), or loss or damage to tangible or intangible property to the extent caused, or alleged to be caused, in whole or in part, by the negligent or willful acts or omissions of Contractor or any of its owners, officers, directors, agents, employees or subcontractors.

This indemnity includes any claim or amount arising out of or recovered under the Workers' Compensation Law or arising out of the failure of such contractor to conform to any federal, state or local law, statute, ordinance, rule, regulation or court decree. It is the specific intention of the parties that the Indemnitee shall, in all instances, except for Claims arising from the negligent or willful acts or omissions of the Indemnitee, be indemnified by Contractor from and against any and all claims. It is agreed that Contractor will be responsible for primary loss investigation, defense and judgment costs where this indemnification is applicable. In consideration of the award of this contract, the Contractor agrees to waive all rights of subrogation against the County, its officers, officials, agents and employees for losses arising from the work performed by the Contractor for the County.

ARTICLE 4 – INSURANCE REQUIREMENTS: Contractor and subcontractors shall procure and maintain until all of their obligations have been discharged, including any warranty periods under this Contract are satisfied, insurance against claims for injury to persons or damage to property which may arise from or in connection with the performance of the work hereunder by the Contractor, his agents, representatives, employees or subcontractors.

The insurance requirements herein are minimum requirements for this Contract and in no way limit the indemnity covenants contained in this Contract. The County in no way warrants that the minimum limits contained herein are sufficient to protect the Contractor from liabilities that might arise out of the performance of the work under this contract by the Contractor, his agents, representatives, employees or subcontractors and Contractor is free to purchase additional insurance as may be determined necessary.

A. **MINIMUM SCOPE AND LIMITS OF INSURANCE**: Contractor shall provide coverage with limits of liability not less than those stated below.

1. **Commercial General Liability – Occurrence Form**
   Policy shall include bodily injury, property damage and broad form contractual liability coverage.
   - General Aggregate $2,000,000
   - Products – Completed Operations Aggregate $1,000,000
   - Personal and Advertising Injury $1,000,000
   - Each Occurrence $1,000,000

   a. The policy shall be endorsed to include the following additional insured language: **"The County of Gila shall be named as an additional insured with respect to liability arising out of the activities performed by, or on behalf of the Contractor".**

2. **Worker's Compensation and Employers' Liability**

Workers' Compensation	Statutory
Employers' Liability	
Each Accident	$100,000
Disease – Each Employee	$100,000
Disease – Policy Limit	$500,000

   a. Policy shall contain a **waiver of subrogation** against the County of Gila.

3. **Automobile Liability**
   Bodily injury and property damage for any owned, hired, and non-owned vehicles used in the performance of this Contract.

Combined Single Limit (CSL)	$1,000,000

   The policy shall be endorsed to include the following additional insured language:

The County of Gila shall be named as additional insured with respect to liability arising out of the activities performed by, or on behalf of the Contractor, including automobiles owned, leased, hired or borrowed by the Contractor".

4. **Professional Liability (Errors and Omissions Liability)**

Each Claim	$1,000,000
Annual Aggregate	$2,000,000

   a. In the event that the professional liability insurance required by this Contract is written on a claims-made basis, Contractor warrants that any retroactive date under the policy shall precede the effective date of this Contract; and that either continuous coverage will be maintained or an extended discovery period will be exercised for a period of two (2) years beginning at the time work under this Contract is completed.

B. **ADDITIONAL INSURANCE REQUIREMENTS:** The policies shall include, or be endorsed to include, the following provisions:

1. On insurance policies where the County of Gila is named as an additional insured, the County of Gila shall be an additional insured to the full limits of liability purchased by the Contractor even if those limits of liability are in excess of those required by this Contract.
2 The Contractor's insurance coverage shall be primary insurance and non-contributory with respect to all other available sources.
3. Coverage provided by the Contractor shall not be limited to the liability assumed under the indemnification provisions of this Contract.

C. **NOTICE OF CANCELLATION:** Each insurance policy required by the insurance provisions of this Contract shall provide the required coverage and shall not be suspended, voided, canceled, reduced in coverage or endorsed to lower limits except after thirty (30) days prior written notice has been given to the County. Such notice shall be sent directly to **Gila County Purchasing Department, 1400 E. Ash St., Globe, AZ, 85501** or and shall be sent by certified mail, return receipt requested.

D. **ACCEPTABILITY OF INSURERS:** Insurance is to be placed with insurers duly licensed or approved unlicensed companies in the state of Arizona and with an "A.M. Best" rating of not less than B+ VI. The County in no way warrants that the above-required minimum insurer rating is sufficient to protect the Contractor from potential insurer insolvency.

E. **VERIFICATION OF COVERAGE:** Contractor shall furnish the County with certificates of insurance (ACORD form or equivalent approved by the County) as required by this Contract. The certificates for each insurance policy are to be signed by a person authorized by that insurer to bind coverage on its behalf.

All certificates and endorsements are to be received and approved by the County before work commences. Each insurance policy required by this Contract must be in effect at or prior to commencement of work under this Contract and remain in effect for the duration of the project. Failure to maintain the insurance policies as required by this Contract or to provide evidence of renewal is a material breach of contract.

All certificates required by this Contract shall be sent directly to **Gila County Purchasing Department, 1400 E. Ash St., Globe, AZ, 85501** or email to bhurst@gilacountyaz.gov.
The County project/contract number and project description shall be noted on the certificate of insurance. The County reserves the right to require complete, certified copies of all insurance policies required by this Contract at any time.

F. **SUBCONTRACTORS:** Contractors' certificate(s) shall include all subcontractors as additional insured's under its policies **or** Contractor shall furnish to the County separate certificates and endorsements for each subcontractor. All coverage's for subcontractors shall be subject to the minimum requirements identified above.

G. **APPROVAL:** Any modification or variation from the insurance requirements in this Contract shall be made by the County Attorney, whose decision shall be final. Such action will not require a formal Contract amendment, but may be made by administrative action.

ARTICLE 5 – LEGAL ARIZONA WORKERS ACT COMPLIANCE: As required by A.R.S. § 41-4401, each party hereby warrants its compliance with all federal immigration laws and regulations that relate to its employees and A.R.S. § 23-214(A). Each party further warrants that after hiring an employee, it verifies the employment eligibility of the employee through the e-verify program. If either party uses any subcontractors in performance of the Agreement, Subcontractors shall warrant their compliance with all federal immigration laws and regulations that relate to its employees and A.R.S. § 23-214(A), and Subcontractors shall further warrant that after hiring an employee, such Subcontractor verifies the employment eligibility of the employee through the e-verify program.

A breach of this warranty shall be deemed a material breach of the Agreement subject to penalties up to and including termination of this Agreement. A party shall not be deemed in material breach if it and its Subcontractors establish compliance with the employment verification provisions of Sections 274A and 274B of the federal Immigration and Nationality Act and the e-verify requirements contained in A.R.S. § 23-214(A). Each party retains the legal right to inspect the papers of the other party and its SubContractors engaged in performance of this Agreement to ensure that the other party and its SubContractors are complying with the warranty. Any inspection will be conducted after reasonable notice and at reasonable times. If state law is amended, the parties may modify this paragraph consistent with state law.

ARTICLE 6 – WARRANTY: Contractor warrants that services will be provided in a manner consistent with the Professional Standard of Care

ARTICLE 7 – LAWS AND ORDINANCES: This agreement shall be enforced under the laws of the State of Arizona. Contractor shall maintain in current status all Federal, State and Local licenses and permits required for the operation of the business conducted by the Contractor. The Contractor shall comply with the applicable provisions of the Americans with Disabilities Act (Public Law 101-336, 42 U.S.C. 12101-12213) and applicable federal regulations under the Act, as required by the Professional Standard of Care.

ARTICLE 8 – CANCELLATION: This agreement is subject to cancellation pursuant to A.R.S. §38-511. If the Agreement is terminated, the county shall be liable only for payment for Services rendered and accepted material received by the County before the effective date of termination.

ARTICLE 9 – RELATIONSHIP OF THE PARTIES: Contractor is an independent contractor of the County. Contractor represents that he has or will secure, at his own expense, all personnel required in performing the Services under this contract. Such personnel shall not be employees of or have any contractual relationship with the County.

All personnel engaged in work under this contract shall be fully qualified and shall be authorized or permitted under State and local law to perform such Services. Contractor warrants that he has obtained or will obtain Worker's Compensation Insurance for his employees working on this contract and that any subcontractors will likewise obtain Worker's Compensation Insurance for of their employees working on this contract. It is further agreed by Contractor that he shall obey all state and federal statutes, rules, and regulations which are applicable to provisions of the Services called for herein. Neither Contractor nor any employee of the Contractor shall be deemed an officer, employee, or agent of the County.

ARTICLE 10 – NON-APPROPRIATIONS CLAUSE: Contractor acknowledges that the County is a governmental entity, and the contract validity is based upon the availability of public funding under its authority. In the event that public funds are unavailable and not appropriated for the performance of County's obligations under this contract, then this contract shall automatically expire without penalty to County after written notice to Contractor of the unavailability and non-appropriation of public funds. It is expressly agreed that the County shall only activate this non-appropriation provision as an emergency fiscal measure. The County shall not activate this non-appropriation provision for its convenience, to circumvent the requirements of this contract, or to enable the County to contract with another Contractor for the same supplies or Services covered under this Addendum.

ARTICLE 11 – ENTIRE CONTRACT CLAUSE: The Contractor and the County have read this Contract and agree to be bound by all of its terms, and further agree that it constitutes the entire contract between the two parties and may only be modified by a written mutual contract signed by the parties. No oral agreement or oral provision outside this Contract shall have any force or effect.

ARTICLE 12 – NON-WAIVER OF ENFORCEABILITY: Failure of the County to enforce, at any time, any of the provisions of this Contract, or to request at any time performance by Contractor of any of the provisions hereof, shall in no way be construed to be a waiver of such provisions, nor in any way affect the validity of this contract or any part thereof, or the right of the County to enforce each and every provision

ARTICLE 13 – GOVERNING LAW: Both parties agree that this Contract shall be governed by the laws of the state of Arizona. The parties further agree that the jurisdiction for any legal disputes arising out of this Contract shall be the Superior Court of the State of Arizona. The parties agree that even if this Contract does not specifically reference any provision required by state or federal law, those state and federally required provisions are incorporated into this Contract by this reference as though they were specifically listed herein.

ARTICLE 14– TERM: The term of the contract shall commence on the date it is approved by the Board of Supervisors and remains in effect through December 31, 2020.

In the event the County exercises such a right, all terms, conditions and provisions of the original contract shall remain the same and apply during the renewal period.

ARTICLE 15 – PAYMENT/BILLING: Contractor shall be paid an amount not to exceed $50,000.00 for completion of the projects as outlined in the Scope of Services.

All invoices shall be submitted to Gila County Accounts Payable, 1400 E. Ash St., Globe, Arizona and include the following information:

- Purchase Order Number
- Contract Number
- Invoice Number
- Service Location
- Vendor Name and Address
- Description of Service

Any alterations to the scope of work resulting in a change in cost must have prior written approval by the County. Any unauthorized work may result in non-payment to the vendor.

Gila County employs a "Net 15" payment term for Services meaning the payment will be issued fifteen (15) days from the date the County receives the invoice from the Contractor. Purchase orders sent to the Contractor reflect these terms and conditions.

The Contractor shall have a current I.R.S. W-9 form on file with the County unless not required by law. The County shall not remit payment if the Contractor does not have a current W-9.

IN WITNESS WHEREOF, three (3) identical counterparts of this contract, each of which shall include original signatures, and for all purposes shall be deemed an original thereof, have been duly executed by the parties hereinabove named, on this _____ day of _____, 2020.

GILA COUNTY BOARD OF SUPERVISORS:

_____

Chairman, Board of Supervisors

ATTEST:

_____

Marian Sheppard, Clerk of the Board of Supervisors

APPROVED AS TO FORM:

_____

The Gila County Attorney's Office

CONTRACTOR:

_____

Authorized Signature

_____

Print Name

PROFESSIONAL SERVICES CONTRACT
PLANS FOR BROADBAND STATEGY, NETWORK DESIGN AND COMMUNITY OUTREACH
FOR GILA COUNTY

SCOPE OF SERVICES: The Contractor agrees to provide professional consulting services to provide design, plans and cost for a Broadband Network, organize and host community meeting and surveys to determine level of interest for high speed internet in the Gila County, and document alternative organizational structures - advantages, feasibility and availability - to deploy, operate and manage the fiber network.

The Contractor shall:

- Utilize latest information available from previously contracted consultants.

- First-Mile- Determine and document the feasibility, advantages and cost differential to own and manage a publicly owned network versus leasing the first mile from utility fiber networks (SRP, APS, etc.) and/or internet service providers.
    - Working with the Gila County Broadband Strategic Planning Team, engage with the existing or proposed first- and middle-mile carriers – SRP, APS, Sparklight, and Century link to explore availability and cost of fiber links and pole utilization. Provide written documentation that captures the alternatives and proposes the best solution.
    - Determine Connection and Cost to the Internet Exchange Point in Phoenix – 615 N 48 St. – from a government facility network in both Payson and Globe.

- Middle-Mile –- Determine and document the feasibility, advantages and cost differential to own and manage a publicly owned network versus leasing the middle mile from utility fiber networks (SRP, APS, etc.) and/or internet service providers Using the best proposed model, provide design for a fiber to the home/business middle mile network that includes material specification, network performance, component unit cost, material network cost and cost of installation. The level of detail should be sufficient to develop realistic cost models and to provide documentation for public meeting and grant submissions. Determine cost and method to connect to the first mile for each community. The middle mile design should extend to the node (FTTN) or neighborhood:
    - Payson/Star Valley
    - Pine/Strawberry
    - Communities along Houston Mesa Road
    - Hayden/Winkelman
    - Communities along SR 188 – North of Roosevelt Dam
    - Communities along SR 188 – South of Roosevelt Dam
    - Communities along SR 87 south of Payson
    - Miami/Globe
- If there are project constraints, it may be necessary to draw comparisons of similarity between communities to quickly develop scaled estimates for the County's master plan. Where required, the Consultant will review categories of communities with the County and model a sample for each categorical type to aid in cost opinion development for other communities of a similar type.

- Last Mile - Determine and document the feasibility, advantages and cost differential to provide broadband level transmission (1 Gbps) utilizing fiber cable vs next best medium. Provide design for a fiber to the home/business network that includes material specification, network performance, component unit cost, material network cost and cost of installation. These designs shall be specifically developed for each area. At a minimum, designs for four regional areas will be provided such that the cost for other regions in the county can be extrapolated from these

models. The last mile design should extend from the node to the home or business and include all equipment required on the subscriber property. The proposed regional areas include, but may be subject to change based on input from the Strategic Planning Team:

- Young
- Pine-Strawberry
- Rim Community Ring
- Tonto Basin

- Develop plans, communication material, and agendas and for community meetings. Host in-person/zoom community meetings (as permitted by COVID protocols) to reach as wide an audience possible. Up to two community meeting will be hosted from a physical location in the county – Payson and Globe area. The purpose of the meetings shall be to determine community interest and commitment to high speed broadband networks. The meeting outcome will be documented. The meeting material should include:
  - Vision of network design, and network operation
  - Network cost and cost to fiber subscriber
  - Network reliability
  - Financing options for the subscriber
  - Operation Structure for the Network Owner

- Work with Gila County staff to provide content to update the existing website

- Engage the Industrial Development Authority (IDA) to determine funding availability and feasibility to use IDA funding for fiber networks. Provide written documentation for this item.

- Develop a white paper outlining the opportunities, challenges, feasibility of deploying, operating and managing a fiber network that addresses the various alternative presented in this scope and provide a recommendation for the future of broadband in Gila County. Additionally, the following items will be addressed:
  - Operational Structures:
    - Improvement Districts in the State of Arizona
    - Cooperatives in the State of Arizona
    - Other operational structures as determined by Gila County Broadband Strategic Planning Team
  - Review e-rate network and look for opportunities to leverage the e-rate infrastructure.

- Develop and document an implementation plan that can be used as a county wide initiative or as a regional initiative and that can be used in support of grant submittals.

- Join Gila County Staff in presenting both the white paper and the implementation plan to the Board of Supervisors. (1meeting)

- Assumptions:
  - One kickoff meeting with Gila County PM and project team
  - Up to 4 additional progress calls with Gila County PM and project team. No meeting agenda or minutes will be prepared
  - One meeting with IDA representatives
  - One meeting with E-rate representatives
  - Up to 4 meetings with fiber providers
  - We will create an ArcMap Dashboard utilizing versions 10.6 and 10.7 that all parties will have access to view. Utilizing Esri products, we publish these services to a non-federated portal (Dashboard). We use Geocortex to create our applications. We will be able to provide shape files that are compatible with ArcMap and ArcMap Pro as well as any other Esri compatible product.
  - This dashboard will contain information comprised in layers that will include

municipality boundaries, road ownership, and the high-level design that will include route and proposed handhole locations. Any additional information requested during the project will need to be provided by Gila County.

- Specific schema requirements need to be provided within the NTP
- Each deliverable will have a draft submittal, followed by one set of comments that will be addressed, and a final submittal
- No engineering/field survey will be acquired
- No geotechnical samples will be acquired
- No construction plans will be developed
- We shall rely on the accuracy of information provided by Gila County
- No additional public meetings will be held

REQUEST FOR PROPOSALS NO. 071320

MASTER BROADBAND PLAN

GILA COUNTY

BOARD OF SUPERVISORS
Tommie C. Martin, Vice Chairman
Tim Humphrey, Member
Woody Cline, Chairman

County Manager
James Menlove

GILA COUNTY
PROCUREMENT GROUP
NOTICE OF REQUEST FOR PROPOSALS

1400 East Ash Street
Globe, Arizona
85501

SOLICITATION NUMBER
071320

BID DUE DATE: September 3, 2020 **TIME:** 3:00 PM

DESCRIPTION: Master Plan for Broadband Phase 2 in Gila County

PRE-BID CONFERENCE: Not Applicable

Bid Submittal Location: Gila County Procurement, 1400 E. Ash St., Globe, AZ 85501

Bid Opening Location: Gila County Copper Building Conference Room
1400 E. Ash Street, Globe, AZ 85501

NOTICE IS HEREBY GIVEN, that sealed competitive Proposals for the material or services as specified will be received by the Gila County Procurement Department, until the time and date cited.

Interested Bidders may obtain a copy of this solicitation by calling Gila County Procurement at 928-402-4355 Bidders are strongly encouraged to carefully read the entire Request f
or Proposal.

Proposals received by the correct time and date will be publicly opened and recorded thereafter in the Copper Building Conference Room, 1350 E. Monroe St., Globe, AZ, or another site, which may be designated. Any proposals received later than the date and time specified above will not be considered.

The County takes no responsibility for informing recipients of changes to the original solicitation document. It is the Offeror's responsibility to obtain a copy of any amendment relevant to this solicitation.

The Board of Supervisors reserves the right to reject any or all proposals, or to accept any proposal, or to waive any informality in any proposal, or to withhold the award if deemed in the best interest of Gila County.

All procurement activities conducted by Gila County are in conformance with the rules and regulations of the Gila County Procurement Code. A copy of the Code is available for review in the Deputy Clerk of the Board's office, Globe, AZ.

Payson Roundup advertisement dates: August 11, 2020 and, August 18, 2020

Signed: _____ Date: _____
The County Attorney's Office

Signed: _____ Date: _____
Woody Cline, Chairman, Board of Supervisors

REQUEST FOR PROPOSALS

INDEX

Section A	Request for Proposals
Section B	Purpose of the RFP/Intent/Evaluation Criteria
Section C	Instructions to Respondents
Section D	Qualifications
Section E	Scope of Work
Section F	Proposal Certification

Gila County General Provisions

***NOTE**: The General Provisions are being provided solely for the purpose of the potential Qualifier to be aware of Gila County's liability requirements and contract format.*

Section A. **REQUEST FOR PROPOSALS**

RFP NO. 071320

It is the intent of Gila County to hire an engineering firm to perform the services as outlined in the 'Scope of Work" for a Master Broadband Plan Phase 2 in Gila County. The County has secured a $50,000 planning grant for this project and the maximum funding available is $50,000.

Master Broadband Plan Phase 2

Request for Proposals are to be received in the Office of:

Betty Hurst,
Contracts Administrator
Copper Building
1400 E. Ash Street
Globe, AZ 85501

Until: 3:00 p.m. on September 3, 2020, at which time a representative of the Purchasing Services Department shall announce publicly the names of those firms submitting Responses. **No other public disclosure shall be made until after award of the contract.**

All inquiries regarding this Request shall be directed to:

Name: Betty Hurst, Contracts Administrator
Address: 1400 E. Ash Street
Globe, AZ 85501

Phone: (928) 402-4355
Email: bhurst@gilacountyaz.gov

Section B. **PURPOSE OF THE RFP**

1. It is the intent of Gila County to hire a consultant to perform the services as outlined in the "Scope of Work" for a Master Broadband Plan for Gila County. Consultants interested in being selected for the proposed work shall submit their proposal to Betty Hurst – Contracts Administrator, by November 8, 2019 at 3:00 P.M.

2. Any questions regarding the proposed work must be submitted in writing no later than August 20, 2020 at 3:00 P.M. All questions will be answered in writing no later than August 27, 2020 at 3:00 P.M.

3. Proposals will be evaluated as follows:

• Experience of the Consultant with similar projects	25 points
• Qualifications of the proposed Consultant	25 points
• Project understanding	20 points
• Implementation of similar projects	30 points

Section C. **INSTRUCTIONS TO RESPONDENTS**

Request for Proposals shall be addressed and delivered to:

Name: Betty Hurst
Contracts Administrator
Address: 1400 E. Ash Street
Globe, AZ 85501

Responses shall be in a sealed envelope marked as follows:

Name of Respondent
Title of Respondent
RFP Title and Number
Date and Time Response is Due

No telephonic, telegraphic, or facsimile Responses shall be considered. Responses received after the time for closing shall be returned to the Respondent unopened.

1. Responses shall be submitted in **3** hard copies and 1 electronic copy.

2. No department, school, or office at the County has the authority to solicit official responses

other than the Finance Department. All solicitation is performed under the direct supervision of the Finance Director and in complete accordance with Gila County policies and procedures.

3. Responding firms **may** be requested to meet with the selection committee to discuss their Request for Proposals. Scheduling of these discussions shall be accomplished by the Public Works Department.

4. Any information considered to be proprietary by the Proposer shall be placed in a separate envelope and marked "Proprietary Information." To the extent the Finance Director concurs, this information shall not be considered public information. The Finance Director is the final authority as to the extent of material which is considered confidential. Pricing information cannot be considered proprietary.

5. If responding by express mail, allow sufficient time for delivery. Globe is considered a rural area; thereby Federal Express deliveries are often made late in the afternoon. Request for Proposals may not be faxed nor electronically transmitted to the County. Proposals, which are received after the deadline, will not be considered. Submitters must ensure delivery (not postmarking) by the date and time indicated above.

6. Proposals shall be signed by an authorized agent of the company.

Section D. **QUALIFICATIONS**

1. Provide information on your prior experience designing and implementing a residential Broadband solution for cities and/or counties.

2. References

   Respondent shall include references for Master Broadband Plans developed by the Consultant of similar scope and size. Be sure to include the name, title, phone number and e-mail of persons able to discuss project(s) in detail.

Section E. **SCOPE OF WORK**

The Contractor agrees to provide professional consulting services to provide detailed design, plans and cost for a Broadband Network, organize and host community meeting and surveys to determine level of interest for high speed internet in the Gila County, and document alternative organizational structures - advantages, feasibility and availability - to deploy, operate and manage the fiber network.

The Contractor shall:

- Utilize latest information available from previously contracted consultants.

- First-Mile- Determine and document the feasibility, advantages and cost differential to own and manage a publicly owned network versus leasing the first mile from utility fiber networks (SRP, APS, etc.) and/or internet service providers.
    - Working with the Gila County Broadband Strategic Planning Team, engage with the existing or proposed first- and middle-mile carriers – SRP, APS, Sparklight, and Century link to explore availability and cost of fiber links and pole utilization. Provide written documentation that captures the alternatives and proposes the best solution.
    - Determine Connection and Cost to the Internet Exchange Point in Phoenix – 615 N 48 St.

- Middle-Mile –- Determine and document the feasibility, advantages and cost differential to own and manage a publicly owned network versus leasing the middle mile from utility fiber networks (SRP, APS, etc.) and/or internet service providers Using the best proposed model, provide detailed design for a fiber to the home/business middle mile network that includes material specification, network performance, component unit cost, material network cost and cost of installation. Determine cost and method to connect to the first mile for each community. The middle mile design should extend to the node (FTTN) or neighborhood:
    - Payson/Star Valley
    - Pine/Strawberry
    - Communities along Houston Mesa Road
    - Hayden/Winkelman
    - Communities along SR 188 – North of Roosevelt Dam
    - Communities along SR 188 – South of Roosevelt Dam
    - Communities along SR 87 south of Payson
    - Miami/Globe
    - Others?

- Last Mile - Determine and document the feasibility, advantages and cost differential to provide broadband level transmission (1 Gbps) utilizing fiber cable vs next best medium. Provide detailed design for a fiber to the home/business network that includes material specification, network performance, component unit cost, material network cost and cost of installation. These designs shall be specifically developed for each area. At a minimum, designs for four regional areas will be provided such that the cost for other regions in the county can be extrapolated from these models. The last mile design should extend from the node to the home or business and include all equipment required on the subscriber property. The proposed regional areas include, but may be subject to change based on input from the Strategic Planning Team:
    - Young
    - Pine-Strawberry
    - Rim Community Ring
    - Tonto Basin

- Develop plans, communication material, and agendas and for community meetings. Host

in-person/zoom community meetings (as permitted by COVID protocols) to reach as wide an audience possible. At a minimum two community meeting will be hosted from a physical location in the county – Payson and Globe area. The purpose of the meetings shall be to determine community interest and commitment to high speed broadband networks. The meeting outcome will be documented. The meeting material should include:

- Vision of network design, and network operation
- Network cost and cost to fiber subscriber
- Network reliability
- Financing options for the subscriber
- Operation Structure for the Network Owner

- Upgrade website to make it unique to Gila County and incorporate the website into County website
- Engage the Industrial Development Authority (IDA) to determine funding availability and feasibility to use IDA funding for fiber networks. Provide written documentation for this item.
- Develop a white paper outlining the opportunities, challenges, feasibility of deploying, operating and managing a fiber network that addresses the various alternative presented in this scope and provide a recommendation for the future of broadband in Gila County. Additionally, the following items will be addressed:
    - Operational Structures:
        - Improvement Districts in the State of Arizona
        - Cooperatives in the State of Arizona
        - Other operational structures as determined by Gila County Broadband Strategic Planning Team
    - Review e-rate network and look for opportunities to leverage the e-rate infrastructure.

- Develop and document a detailed implementation plan that can be used as a county wide initiative or as a regional initiative and that can be used in support of grant submittals.

Section F. **RESPONSE CERTIFICATION**

_____
(DATE)

Purchasing Services Department

The undersigned certifies that to the best of his or her knowledge: (check one)

☐ There is no officer or employee of Gila County who has, or whose relative has, a substantial interest in any Contract award subsequent to this Response.

☐ The names of any and all public officers or employees of Gila County who have, or whose relative has, a substantial interest in any Contract award subsequent to this Response are identified by name as part of the submittal

The undersigned further certifies that their firm (check one) ☐ **IS** or ☐ **IS NOT** currently debarred, suspended, or proposed for debarment by any federal or state entity. The undersigned agrees to notify the County of any change in this status, shall one occur, until such time as an award has been made under this procurement action.

In compliance with Request for Proposals No. 093019 Master Broadband Plan for Gila County, and after carefully reviewing all the terms and conditions imposed therein, the undersigned agrees to furnish such services in accordance with the specifications/scope of work according to the Proposal submitted or as mutually agreed upon by subsequent negotiation.

_____	_____
(signed)	(by)
_____	_____
(firm)	(title)
_____	_____
(address)	(phone number)

Section G **CONTRACT**

a. The county reserves the right to award the total proposal, to reject any and all proposals and to waive any informality or technical defects if, in the County's sole judgment, the best interest of the County be so served;
b. The County reserves the right to request clarification of information from any firm submitting a proposal;
c. The County reserves the right to cancel this RFP at any time prior to contract award without obligation in any manner for proposal preparation, interview, fee negotiation or other marketing costs associated with this RFP;
d. The Contract resulting from acceptance of a proposal by the County shall be in a form supplied by the County and shall reflect the specifications of this RFP.
e. The County reserves the right to reject any proposed agreement that does not conform to the specification contained in this RFP, and which is not approved by the County Attorney's office;
f. Engineering firm analysis should include the foundation and any concerns regarding supporting buildings or structures;
g. The County shall not be responsible for any costs incurred by the firm in preparing, submitting or presenting its response to the RFP;
h. Selection criteria of the RFP will be evaluated on Professional Qualifications, Fees and Experience;
i. All bid documents are public record and subject to disclosure.

Section H **COST LIABILITY**

The County assumes no responsibility or liability for costs incurred by the Consultant prior to the execution of a Professional Services Agreement. The liability of the County is limited to the terms and conditions outlined in this Agreement.

Master Broadband Plan Phase 2 (No. 071320)

Kimley»Horn

September 3, 2020

Kimley»Horn

September 3, 2020

Betty Hurst, Contracts Administrator
Copper Building
1400 E. Ash Street
Globe, AZ 85501

Lina Bearat, P.E., RSP$_1$
Kimley-Horn
7740 N. 16th Street, Suite 300
Phoenix, AZ 85020

RE: Gila County Master Broadband Plan Phase 2

Dear Members of the Selection Committee:

Kimley-Horn is excited to submit our Statement of Qualifications (SOQ) for the Gila County Master Broadband Plan Phase 2 project that will develop a strategic plan for deploying affordable and available broadband service in your community. We have assembled a team who has the necessary experience to support the Gila County Broadband Strategic Planning team and provide recommendations for the future of broadband in the area. As you review our SOQ, please consider the following benefits of our team:

Local Project Manager. Phoenix-based Project Manager, Lina Bearat, P.E., RSP$_1$, will lead our team for this project. Lina is a well-respected project manager and engineer throughout Arizona and Kansas, having worked closely with the Arizona Department of Transportation (ADOT) and Kansas Department of Transportation (KDOT), numerous municipalities, and other government agencies on transportation and fiber-related projects. She understands the importance of quality client service, which means she is highly responsive to requests and keeping clients and stakeholders abreast of project developments. She also has a strong track record of managing teams to complete projects in a timely manner and within budget. **Through her proven success, she has built strong relationships with and is a trusted partner of the Arizona Commerce Authority State Broadband Director.**

Knowledgeable Team. Members of our team, including Jon Chambers, P.E., and Marshall Knight, Esq., have municipal and private-client broadband experience across the country to help guide recommendations and detailed plans for the broadband services in Gila County. We have also added BPG Technologies to our team to support broadband design and cost analysis to realize affordable service for your community. Together, we look forward to determining the optimal broadband plan for Gila County.

Gila County Experience. The Kimley-Horn team has experience working with Gila County on projects such as the Transportation Study (PARA), Rim Trail Bridge Replacement, Sewer Master Plan, and the Tonto Creek Bridge Design Concept Report/Environmental Assessment/Design. That is to say – we know your people and community, understand your processes and standards, and have successfully demonstrated our capabilities to complete projects that exceed expectations. We look forward to continuing to serve Gila County, project stakeholders, and your community, "the heart of Arizona".

Our team is truly all about client service; we work hard to find ways to solve problems for our clients and help them be successful. We will take that mindset into this project because we understand how important broadband is for rural communities, especially with current circumstances where many depend heavily on a communications network from home for business and schooling. We truly want to serve you to the best of our ability and make sure this project is a success. Should you have any questions regarding our SOQ, please contact Lina Bearat at 602.216.1299 or at lina.bearat@kimley-horn.com.

We acknowledge receipt of all addenda.

Sincerely,

KIMLEY-HORN

Lina Bearat, P.E., RSP1
Project Manager

Brian R. Smalkoski, P.E., AICP, PTP, PTOE
Authorized Signer

Experience and Implementation of Similar Projects

Kimley-Horn is a national engineering and planning firm with over 4,300 employees in more than 90 offices nationwide, including our local Arizona offices in Phoenix, Mesa, Tucson, and Prescott. Founded in 1967, Kimley-Horn has built a reputation in Arizona and nationwide for providing innovative, high-quality consulting services. Our growth over the last 53 years is the result of our firm's commitment to integrity and dedication to providing quality services – in fact, 90% of our work originates from repeat clients, including Gila County, ADOT, and many other government agencies across the state.

We provide the County with the local knowledge and responsiveness of a small organization, backed by the depth of resources only a national firm could offer. Today, we are one of the largest engineering, planning, and environmental consulting firms in the United States. According to Engineering News-Record, our firm currently ranks 17th overall among the nation's top 500 design firms.

Kimley-Horn is also support by **BPG Technologies (BPG)**. BPG is a telecommunication service provider specializing in providing the technology infrastructure today's fast-paced businesses need to succeed. They provide innovative, creative, and forward-thinking solutions on infrastructure design, installation, and fiber-optics needs. BPG has successfully served clients in state and local government, private businesses, and healthcare centers. Their broadband experience includes building, splicing, and testing fiber infrastructures in Arizona, Nevada, and California.

We are excited to team together to combine our experience to deliver a successful Broadband Master Plan for the County. Our broadband and fiber experience includes work for municipalities across the nation, providing planning and design services to meet the needs of their communities.

We have highlighted similar projects in the following pages, and our three references are on page 23 of this proposal.

Figure 1: Lessons Learned

We have overcome and learned from challenges and successes on these previous similar projects. Some of our lessons learned that we will bring into this project are captured below:

- Understanding the needs of the community is key to **a meaningful project**
- Coordinating early with stakeholders will help **keep the project on schedule**
- Understanding ever-changing standards and permitting processes is important to **successful design**
- Developing relationships with ISP providers can help in **coming to agreements quicker and getting better pricing**
- Internal workload planning tools help us to **meet our schedules**
- **Proactive and constant communication** is critical with the internal consultant team and with the client

Yuma Regional Broadband/Fiber Master Plan

Yuma, AZ

The City of Yuma selected Kimley-Horn to refine countywide communication needs and collaborate with others to seek opportunities for sharing in cost of mutual deployments. The goal of this project is to better understand current fiber infrastructure ownership and work to reduce dependency on other entities. Kimley-Horn is engaging with other entities throughout the region to understand current and future infrastructure needs, desires to identify common interests/objectives to improve fiber and broadband resource availability in the region, and options for operating/ maintaining the associated infrastructure. As part of this project, Kimley-Horn is developing concepts regarding shared-use strategies involving shared conduits, shared cables, and shared junction boxes. Kimley-Horn is also exploring strategies for establishing reliable ISP connectivity to the Phoenix metro area and determining options for middle-mile connections. The team is also exploring funding options and developing technical specifications for a potential future Request for Proposals (RFP).

Oakland Fiber Network Master Plan Update

Oakland, CA

Kimley-Horn worked with the City of Oakland's Information Services Department to prepare a Fiber-Optic Network Master Plan to outline a strategy for expanding the City's fiber-optic network. This Master Plan expanded on the City's ITS Strategic Plan Update previously prepared by Kimley-Horn and included non-transportation functions and other City departments, including the potential for private providers (e.g., Lit Oakland) to take advantage of City infrastructure. Kimley-Horn met with these other groups and gathered information regarding existing fiber-optic cable, conduits, and hubs, as well as details of planned and funded projects. Kimley-Horn summarized this information and conducted a gap analysis based on existing and future citywide and individual department needs. Based on this analysis, Kimley-Horn identified short-term (0-2 years), medium-term (2-5 years), and long-term (5+ years) priorities and strategic network enhancements to improve connectivity and support the needs of electrical services, public safety, information services, and port departments. Kimley-Horn prepared project descriptions and preliminary costs for short-term priorities.

Verizon One Fiber-Orlando

Orlando, FL

As a subconsultant to Black and Veatch, Kimley-Horn is designing an expansion to Verizon's One Fiber GPON (gigabit passive optimal network) in the City of Orlando. Verizon has core fiber in place and Kimley-Horn's job is to determine viable business customers adjacent to the core, determine a cost-effective path from the core to each business, and create permit and construction drawings for the infrastructure to be built. Design tasks include GIS mapping of proposed routes, physical site surveys, entry of data into Verizon's 3-GIS database, and submitting plans to the local jurisdiction for review and approval.

Verizon Fiber One

Phoenix, AZ

BPG completed this project covering 1,319 miles of fiber routes. To complete the project, the team used Mobile LiDAR for surveying, along with traditional topographic surveys, and they used software programs such as AutoCAD, 3-GIS, and ESRI. This project had a challenging schedule due to the project size. To stay ahead of schedule, BPG planned appropriately and allocated the right resources at the right time. BPG also has long-standing relationships and strong reputations with the cities, allowing them to retrieve the information to get permits approved and to get permits through faster. They stayed in constant communication with each entity to make sure they had what they needed.

I-17 ITS, Sunset Point to Flagstaff, AZ

Maricopa and Coconino Counties, AZ

Kimley-Horn is designing a seven-way multi-duct and micro-fiber cabling for high-speed broadband along 88 miles of I-17. The design includes avoiding environmental culturally sensitive areas, comparing costs when trenching seven-way multi-duct in the paved shoulder, and coordinating power service for node building locations.

Regional Community Wide-Area Network Study (RCN)

Maricopa County, AZ

Representatives from the Maricopa Association of Governments (MAG) Telecommunications Advisory Group (TAG) and Intelligent Transportation Systems (ITS) Committee selected Kimley-Horn to perform an RCN feasibility study. Upon completing the RCN study, ADOT and their regional partners selected Kimley-Horn to develop two RCN design concept reports (DCR) and ultimately develop the PS&E design documents needed to construct the initial deployment phase of the RCN and provide construction-phase services while the RCN was being built. Once the RCN was constructed, ADOT turned management of the network over to MAG, and MAG hired Kimley-Horn to provide network-management support services to MAG's RCN network manager. During this period, Kimley-Horn helped develop the joint participation agreements (JPAs) with the MAG member agencies that defined the roles and responsibilities of each agency for connecting to the RCN and maintaining the network equipment and fiber-optic communications infrastructure within each agency's jurisdictional boundaries. Kimley-Horn also helped MAG expand the network to interconnect additional member agency jurisdictions and facilities.

Golden LEAF North Carolina Rural Broadband Initiative

Statewide, NC

Kimley-Horn served as lead consultant for the engineering design and environmental assessment relating to construction of 1,200 miles of fiber optic plant facilities that provide high-speed Internet access across rural and under-served portions of North Carolina. The project included middle-mile fiber infrastructure and direct-fiber connections to 170 community colleges, libraries, schools, health and safety facilities, and other community anchor institutions. In addition, Kimley-Horn provided Microelectronics Center of North Carolina (MCNC) with a GPS Survey of their fiber optic lines that serve 52 Community Anchor Institutions. The data was converted to GIS shapefiles for MCNC's use for utility locates and record purposes.

Broadband Infrastructure Master Plan

Berkeley, CA

Kimley-Horn assisted the City of Berkeley to develop a Broadband Infrastructure Master Plan. The project expanded fiber access in public facilities and infrastructure to ensure continuous connectivity and service resilience, addressed the digital divide for low-income and disadvantaged residents, and improved fiber access in key commercial areas. Kimley-Horn provided information of City and non-City owned broadband inventory; an assessment of City, residential, and business broadband needs; and an assessment of City policies related to broadband infrastructure development as part of the development of an overall master plan. Kimley-Horn worked with the Economic Development, Information Technology, and Public Works departments in developing a conceptual Citywide broadband network to address needs, fill in existing gaps, and to guide future investments.

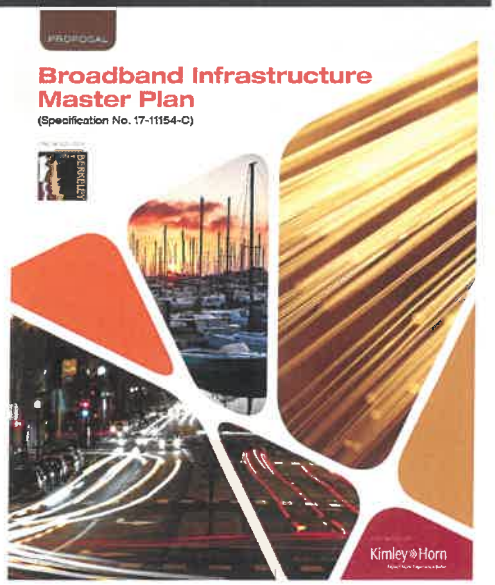

Hampton Roads Regional Connectivity Ring (RCR)

Hampton Roads Region, VA

As a subconsultant to Broadband Telecom, Kimley-Horn provided planning-level services for the projected build-out of the RCR in southeastern Virginia. This proposed fiber network—spanning more than 100+ centerline miles—will provide regional connectivity to new high-speed internet gateways with access to international Trans-Atlantic fiber paths. Kimley-Horn assisted with the development of segment project sheets for each municipality involved and established high-level planning probable-cost opinions for the construction of the network using a mixture of existing and proposed infrastructure to complete the ring. Kimley-Horn used GIS and CADD specialists to develop and overlay mapping of economic zones, existing resources (e.g., conduits, fiber, network hubs), and other elements relevant to the evaluation of the RCR route. Segments were reviewed for high-level needs, construction complexity, potential special permitting requirements such as VMRC, and proximity to areas of municipal/ regional interest for economic development, higher education collaboration, Smart City initiative areas, and connections to other fiber routes into and out of Hampton Roads.

Municipal Broadband Fiber Network

Queen Creek, AZ

Kimley-Horn developed a Communications Master Plan and an Implementation Plan for the Town of Queen Creek's telecommunications infrastructure. We also provided project oversight of the Town's wireless communications project and developed a backbone and "last-mile" conduit and fiber-optic communications architecture that support the Town's ITS, traffic signal system, enterprise IT network, fire and police first responders, and security systems communications needs. This project improved broadband access for both businesses and residents. Project tasks included performing an inventory of the existing and planned infrastructure improvements within the Town; conducting a network needs assessment; identifying system requirements; developing network architecture concepts; performing a technology assessment; providing a recommended MBFN architecture, standards, and guidelines; identifying priority deployment segments; developing a phased, multi-year implementation approach; and developing the scope for the initial deployment design phase.

Yuma ITS Strategic Plan

Yuma, AZ

Kimley-Horn is developing a high-level ITS Strategic Plan that will serve as a tool for the City of Yuma's ITS strategic planning of important technologies and systems. The plan helps the City of Yuma manage its diverse multimodal transportation network more efficiently. This project mapped out a direction for the ITS program and developed a phased approach to integrating existing and new ITS infrastructure and systems to support traffic management, traveler information, incident management, inter-agency communications, and coordination to be more effective locally. The plan included evaluating the goals, vision, needs, and existing infrastructure for the City of Yuma, City of Somerton, Yuma County, and ADOT. The plan also included the framework and processes needed to establish a Transportation Operations Center as well as high-level strategies and recommendations.

Team Qualifications

Kimley-Horn has assembled a team that has the necessary experience and qualifications to successfully complete this project. This includes our subconsultant, **BPG**, to support with broadband design and cost analysis, and our team of in-house staff that have the skills and experience to address all aspects of stakeholder and ISP coordination, planning needs, organizational structures and funding needs, community engagement, and website modifications.

We have outlined our team and their responsibilities in the **Organizational Chart** below. Their qualifications and experience are detailed in the resumes on the following pages.

Figure 2: Organizational Chart

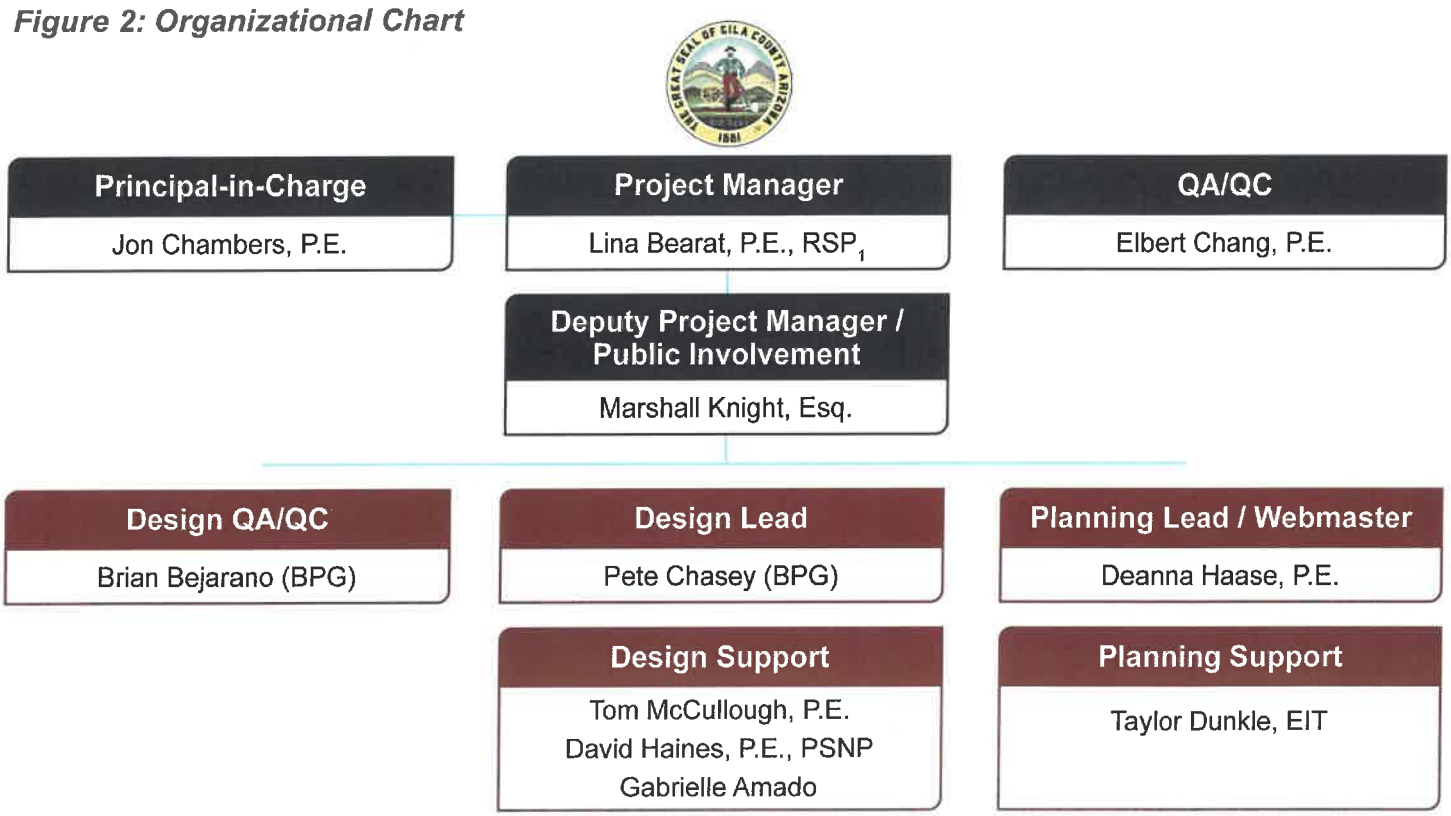

LINA BEARAT, P.E., RSP_1

Project Manager

Education

- Bachelor of Science, Civil Engineering, Arizona State University

Licenses

- Professional Engineer in Arizona (#63700) and Kansas
- Road Safety Professional 1 (RSP_1) (#395)

Lina is a transportation and ITS planning and design engineer in the Phoenix office. Her varied experience provides a complementary knowledge base, allowing her to cross multiple practices and lead in design and planning. Lina has led multiple transportation and ITS planning efforts and has led the design on over a dozen ITS projects. She has deep understanding of ITS technology and fiber optic communications. She is currently leading the broadband effort for the Yuma Region and is engaged with leading multiple stakeholder meetings and coordination. Additionally, her experience includes designing traffic signals, construction traffic control, and signing and pavement marking plans, making her a well-rounded engineer and consultant that is ready to solve problems and serve her clients in any capacity.

Project Experience

- **Yuma Regional Broadband/Fiber Master Plan** — Project Manager
- **Yuma ITS Strategic Plan, Yuma, AZ** — Project Manager
- **ADOT, Gila County Transportation Study (PARA), Gila County, AZ** — Project Engineer
- **KDOT, Statewide Communication Integration Support, 106 KA-1833 (2018-2020), Statewide, KS** — Project Manager
  - Wichita Communications Upgrade Analysis
  - Kansas City Scout Communications Upgrade Analysis
- **KDOT, Kansas OSP Fiber Mapping Database, 106 KA-1832-17 (2018-2020), Statewide, KS** — Project Manager
- **KDOT, ITS Asset Management, KA 5163, Kansas City, KS** — Project Manager
- **ADOT, Design of FMS on I-17 from SR 101L to SR 74, Phoenix, AZ** — Project Engineer
- **ADOT, I-17 Spine Project Near-Term Deployment, Phoenix, AZ** — Project Engineer
- **KDOT, Statewide Rural ITS, KA-3058-01, Statewide, KS** — Project Engineer
- **KDOT, KC Scout ITS Devices, KA 4166, Statewide, KS** — Project Engineer
- **MODOT, KC Scout ITS Devices, Kansas City, MO** — Project Engineer
- **I-10 Picacho Peak Dust Detection System, Pinal County, AZ** — Project Engineer
- **UDOT Highland Project Fiber Extension, Highland, UT** — Project Engineer

JON CHAMBERS, P.E.

Principal-in-Charge

Education

- Bachelor of Science, Electrical Engineering, University of Central Florida

Licenses

- Professional Engineer in Florida, Massachusetts, Minnesota, North Carolina, New Jersey, New York, Tennessee, Vermont, and Virginia

Jon has 28 years of experience in the design of wireline and wireless communications systems and specializes in ITS communications. Jon has extensive experience in telecommunications and systems integration for fiber-optic, leased-line, and wireless systems. Jon led the communication master planning initiatives for the Nebraska DOR Joint Operations Center concepts that included evaluating statewide network topologies and communication media for use in a statewide traffic information system. For MAG, Jon authored the communication reports for network scenarios and inter-agency connection alternatives and provided a comparative analysis of other agency networks deployed around the nation.

Project Experience

- **Broadband Telecom, Hampton Roads Regional Planning Commission, Hampton Roads Regional Connectivity Ring, Hampton Roads Region, VA** — Project Manager
- **Virginia DOT, Statewide Transportation Communication Master Plan, Statewide, VA** — Project Manager
- **City of Richmond, Citywide Communications Network Design, Richmond, VA** — Project Engineer
- **Overland Contracting, Inc., Verizon One Fiber-Orlando, Orlando, FL** — QC/QA Reviewer
- **Virginia DOT, Eastern Region Operations Arterial Communications Upgrades** — Lead ITS Designer
- **North Carolina DOT Freeway Surveillance System, Winston-Salem, NC** — Systems Engineer
- **City of Petersburg, ITS and Communication Master Plan, Petersburg, VA** — Systems Engineer
- **City of Suffolk, Fiber-Optic Network and ITS Improvements of Bridge Road, Suffolk, VA** — Project Engineer
- **Town of Queen Creek, Municipal Broadband Fiber Network, Queen Creek, AZ** — Systems Engineer

MARSHALL KNIGHT, ESQ.

Deputy Project Manager / Public Involvement

Education

- Juris Doctor, Law, George Washington University
- Bachelor of Arts, Sociology, Morehouse College

With 21 years of experience, Marshall is an operations spearhead with an entrepreneurial philosophy and a background as a business attorney specializing in client expansion, program management, wireless, and legal matters. He is skilled in designing and executing strategies to facilitate growth by reducing risk and developing business opportunities and processes. Marshall has extensive experience increasing revenue for companies by targeting strategic opportunities, closing sales, and executing large programs. He is an adaptable and collaborative business partner with the ability to elevate talent and resolve conflicts.

Project Experience

- **Connectivity Needs Assessment and Feasibility Study, Pitkin County, CO*** — Project Manager
- **One Maryland/Inter-County Broadband Network, Howard County, MD*** — Project Manager
- **Great Falls North DAS, A&E Service: Site Survey for Node Construction Documents, Node Construction Drawings, Great Falls, VA*** — Operations Lead
- **Hillside Center: Fiber Engineering Permitting Services, Howard County, MD*** — Operations Lead
- **Baltimore County OIT- Baltimore OIT: Fiber Survey and Engineering Services, Baltimore County, MD*** — Operations Lead
- **Zayo Broadmoor: Engineering and Permitting, including Verizon/BGE Pole Applications, Vienna, VA*** — Operations Lead
- **Zayo Loflin: Fiber Engineering Permitting Services, Philadelphia, PA*** — Operations Lead
- **Zayo Susquehanna: Engineering and Permitting, including CSX ROW Permit, Susquehanna County, PA*** — Operations Lead
- **Zayo North Leslie Road: Engineering and Permitting, including CSW ROW Permit, North East, MD*** — Operations Lead

**Work completed at previous firm*

ELBERT CHANG, P.E., T.E.

QA/QC

Education

- Master of Science, Transportation Engineering, University of California, Berkeley
- Master of City Planning, Transportation Planning, University of California, Berkeley
- Bachelor of Science, Civil Engineering, University of California, Berkeley

Licenses

- Professional Engineer in California
- Traffic Engineer in California

Elbert has 22 years of experience in planning, engineering, and managing a variety of communications and ITS projects in both the private and public sector. He has prepared communication master plans for a variety of public agencies that included feasibility studies of current communication medium technologies and the preparation of preliminary design and PS&E documents for communication networks including leased cellular, private wireless, copper, and optical fiber. He has also designed and implemented including interconnecting traffic controllers, CCTV systems, dynamic message signs, HARs, transit signal priority, changeable message signs, and the connection of central systems over local and wide area networks. The design and implementation of the communication networks included communications end equipment including Layer 2/3 Ethernet switches (edge, hub, and central), serial data modems, fiber transceivers, as well as the consideration of cybersecurity and network addressing protocols.

Project Experience

- **City of Berkeley, Broadband Infrastructure Master Plan, Berkeley, CA** — Project Manager
- **City of Oakland, Fiber Network Master Plan Update, Oakland, CA** — Project Manager
- **City of Concord, Fiber-Optic Communications System Infrastructure Inventory, Concord, CA** — Project Engineer
- **City of Cupertino, Fiber-Optic Design, Cupertino, CA** — Project Manager
- **City of Oakland, ITS Strategic Plan Update, Oakland, CA** — Project Manager
- **Port of Oakland, Security Fiber-Optic Network Expansion and Redundancy Project Design** — Project Manager

DEANNA HAASE, P.E.

Planning Lead / Webmaster

Education

- Bachelor of Science, Civil Engineering, California State Polytechnic University

Licenses

- Professional Engineer in Arizona (#50258), Nevada, Utah, and California

Deanna is a project manager with Kimley-Horn and has led or managed components of various ITS, transportation operations, and performance analysis projects around the country for the past 15 years. Her focus is on infrastructure strategic deployment planning projects that involve evaluating existing infrastructure assets and developing a vision for how agencies can upgrade infrastructure and/or expand geographic coverage areas to enhance their operational capabilities. Deanna's technical expertise also includes performing operational needs assessments; data gathering, management, and information sharing; and regional multijurisdictional coordination to maximize use of the existing assets through expansion and integration of new infrastructure, within and across jurisdictional boundaries, to efficiently enhance the operations of all partnering agencies. Deanna excels at working side-by-side with project stakeholders to help define goals and expectations that result in the development of actionable and implementable strategies. She is also the webmaster for the Arizona Section and Mountain District of the Institute of Transportation Engineers (ITE).

Project Experience

- **City of Chandler, Fiber Network Assessment and Master Plan, Chandler, AZ** — Deputy Project Manager
- **City of Phoenix, ITS Strategic Plan and Network Support Services, Phoenix, AZ** — Project Manager
- **City of Phoenix, Indian School Road Regional Fiber Transportation Enhancement, Phoenix, AZ** — Project Manager
- **RTC of Washoe County, ITS Pilot Projects, Phase 1 and 2 (Center-to-Center), Reno and Sparks, NV** — Project Engineer
- **City of Las Vegas, Smart City Communications Master Plan (Las Vegas Fiber-Optic Master Plan), Las Vegas, NV** — Project Engineer
- **Smart Region Sacramento ITS Architecture and Future Technology Project (and web developer for www.smartregionsacramento.org), Sacramento Region, CA** — Project Engineer
- **ADOT, Surprise ITS Strategic Plan, Surprise, AZ** — Project Manager
- **ADOT MPD, Smart Work Zone (SWZ) Technical Concept Study, Statewide, AZ** — Project Engineer
- **LA Metro, Los Angeles County Regional ITS Architecture (RITSA) Update, Los Angeles, CA** — Project Engineer
- **ITE Arizona Section and Mountain District Webmaster (www.mountainite.org)** — 2017–current

BRIAN BEJARANO (BPG)

Design QA/QC

Education

- Attended College in Central Arizona (Coolidge, Arizona)

With over 20 years of experience in construction, utility, and civil engineering services, Brian guides and leads his team with precision and a focus on producing only the highest quality of product for clients. He is responsible for understanding the customers' problems/challenges and then providing solutions. He also maintains appropriate staffing levels to support the workload and meet client's deadlines.

On this project, Brian will oversee the management and coordination of effective and efficient production levels by setting and monitoring production goals. He will work closely with the Project Manager to ensure that BPG is meeting expected production rates.

Project Experience

- **Engineering and Design Verizon Fiber One 5G Deployment, Phoenix, AZ** — Project Executive
- **Engineering and Design Verizon Fiber One 5G Deployment, Las Vegas, NV** — Project Executive

PETE CHASEY (BPG)

Design Lead

Education

- Bachelor of Arts, Business Management, Almeda University

Certifications/Licenses

- ND6450 Prism and Spectrum Installation and Commissioning
- CommScope Infrastructure Academy
- CDIU Installation and Commissioning
- CommScope Infrastructure Academy

Pete has over 25 years of experience in a multitude of technical environments. Pete's experience includes positions such as a Field Engineer, installing 3rd and 4th generation wireless cellular communications infrastructure, recruiting and training new technicians for LTE installations, working with AT&T on both individual and DAS cell site installation and upgrades, performing site audits in the southwest for AT&T to ensure other vendors met/exceeded SOW requirements, and creating construction drawings using AutoCAD for the Sprint construction teams to use for site upgrades.

As Design Lead on this project, Pete will manage all project timelines to include survey deadlines, drafting, project/customer deadlines, project closeout, billing, and others. He will also oversee the BPG schedule and align his team to make sure work is being completed in the most productive, efficient, and cost-effective manner. Pete will also attend project meetings and provide his team with necessary scope of work, expectation, and plan of execution.

Project Experience

- **Engineering and Design Verizon Fiber One 5G Deployment, Phoenix, AZ** — Project Manager
- **Engineering and Design Verizon Fiber One 5G Deployment, Las Vegas, NV** — Project Manager

TOM MCCULLOUGH, P.E.

Design Support

Education

- Bachelor of Science, Civil Engineering, Arizona State University

Licenses

- Professional Engineer in Arizona (#50066)

Tom has 16 years of experience in ITS design and traffic engineering, including fiber-optic communication design, conduit and fiber-optic cable infrastructure design, and traffic operations. He has been involved in design for fiber optic communications and infrastructure for freeway management systems and local jurisdiction ITS. Tom also has construction support experience in troubleshooting field and inside plant communications infrastructure and implementing conduit and fiber-optic cable infrastructure. He is also proficient in signing and marking design, traffic control design, and traffic signal design and modifications.

Project Experience

- **MCDOT, Last Mile Connections Final Design, Maricopa, AZ** — Project Manager
- **RTC of Washoe County, ITS Pilot Projects, Phase 1 and 2 (Center-to-Center), Reno and Sparks, NV** — Project Engineer
- **ADOT, Design of FMS on I-17 from SR 101L to SR 74, Phoenix, AZ** — Project Engineer
- **ADOT, 75th Ave ITS (2015-2017), Peoria, AZ** — Project Manager
- **ADOT, SR 101L, I-10 to I-17 Freeway Management System CMAR, Phoenix, AZ** — Project Engineer
- **ADOT, Surprise ITS Strategic Plan, Surprise, AZ** — Project Engineer
- **City of Glendale, Peoria Avenue ITS Downtown DMS, Glendale, AZ** — Project Engineer
- **City of Mesa, Santan Freeway (SR 202L) ITS, Mesa, AZ** — Project Engineer
- **City of Phoenix, ITS Strategic Plan, Phoenix, AZ** — Project Engineer
- **City of Phoenix, ITS Fiber Optic Backbone, Phoenix, AZ** — Project Engineer
- **City of Surprise, SR 303L Peoria Avenue to Bell Road Fiber/ITS Design, Surprise, AZ** — Project Engineer
- **KDOT, Statewide Rural ITS, KA-3058-01, Statewide, KS** — Project Engineer

DAVID HAINES, P.E., PSNP

Design Support

Education

- Bachelor of Science, Electrical Engineering, Florida Atlantic University

Licenses

- Professional Engineer in Arizona (#35268), Nevada, Virginia, Idaho, New Mexico, Kansas, Missouri, Utah, Michigan, Oregon, Texas, Nebraska, and California.
- Physical Security Network Professional (PSNP)

David is an experienced project manager and engineer with significant experience designing lighting, power distribution, communications, and security systems for municipal agencies. His communications design experience includes copper, fiber, and wireless communications media; network design architectures (metropolitan area, citywide, campus, and local area); network equipment assessments (switches, routers, security appliances, etc.); and performance of the associated calculations (bandwidth, latency, and link loss). David has designed hundreds of miles of landline and wireless communications infrastructure needed to support monitoring and control of surveillance, access control, and/or detection devices located at remote locations, within a campus, and/or local to a single facility. He has also designed secured communications networks to interconnect multiple control and monitoring centers in support of back-up operations, extended hours of operations, and/or homeland security information/alert coordination among multiple agencies. David has an in-depth understanding of Information Technology telecommunications standards, as well as how and why these standards have evolved over the past 10 years.

Project Experience

- **ADOT, Design of FMS on I-17 from SR 101L to SR 74, Phoenix, AZ —** Electrical Engineer
- **City of Chandler, Fiber Network Assessment and Master Plan, Chandler, AZ —** Project Manager
- **City of Las Vegas, Smart City Communications Master Plan (Las Vegas Fiber-Optic Master Plan), Las Vegas, NV —** Project Manager
- **City of Phoenix, ITS Plan Update and Network Support Services, Phoenix, AZ —** Project Engineer
- **City of Surprise, Fiber Optics and Associated ITS Peoria Avenue Fiber Optics and Associated Corridor Equipment Design, Greenway Road (Cotton Lane to Grand Avenue), Surprise, AZ —** Electrical Engineer
- **City of Tucson, Regional Transportation Data Network (RTDN) Design, Tucson, AZ —** Project Manager
- **Clark County, Fiber Optic Interconnect System, Las Vegas, NV —** Systems Engineer
- **MAG, Regional Community Network (RCN) Gilbert Connection, Gilbert, AZ —** Project Manager
- **MAG, Regional Community Wide-Area Network Study (RCN), Maricopa County, AZ —** Project Manager
- **Town of Queen Creek, Municipal Broadband Fiber Network (MBFN), Queen Creek, AZ —** Project Manager

TAYLOR DUNKLE, EIT

Planning Analyst

Education

- Bachelor of Science, Engineering, University of Arizona

Licenses

- Engineer-in-Training, Arizona (#012743)

Taylor is a transportation planning and traffic operations analyst in our Mesa office. Her experience includes traffic impact analysis, parking utilization analysis, strategic plans, and traffic operations analysis for private clients, municipalities, and other government agencies

Project Experience

- **Yuma ITS Strategic Plan, Yuma, AZ** — Analyst
- **Wild Horse Pass Development Authority, Master Plan Update, Chandler, AZ** — Analyst
- **Maricopa County Department of Transportation (MCDOT), Signal On-Call Task, Phoenix, AZ** — Analyst
- **MCDOT, Olive Avenue Signal Timing, Maricopa County, AZ** — Analyst
- **Clark County, Las Vegas Boulevard from Spring Mountain Road to Sahara Avenue, Las Vegas, NV** — Analyst
- **Santa Cruz Cunty, AMI Hermosa Mine/SR 82 Traffic Impact Analysis, Nogales, AZ** — Analyst
- **MAG, Rio Salado North Freight Study, Phoenix, AZ** — Analyst

GABRIELLE AMADO

Design Analyst

Education

- Bachelor, Civil and Environmental Engineering, Arizona State University

Gabrielle is a parking, ITS, and transportation planner and design analyst. Gabrielle's experience includes parking planning, ITS infrastructure, traffic signals, traffic control, and signing and pavement marking plans.

Project Experience

- **ADOT, I-17 Spine Project Near-Term Deployment, Phoenix, AZ** — Analyst
- **City of Glendale, Olive/Northern/51st Avenue ITS, Glendale, AZ** — Analyst
- **KDOT, Statewide Communication Integration Support, 106 KA-1833 (2013-2019), Statewide, KS** — Analyst
- **KDOT, ITS Asset Management, KA 5163, Kansas City, KS** — Analyst
- **MCDOT, Last Mile Connections Final Design, Maricopa, AZ** — Analyst
- **City of Rochester, Destination Medical Center Parking and Transportation Management Authority Study, Rochester, MN** — Analyst

Project Understanding

Gila County is seeking an engaging consultant to assist in providing a feasibility study, design, and engineering services to support the potential deployment of an affordable master broadband fiber network to several cities, towns, and communities as listed in the RFP No. 071320. Currently, the network is supported by an aged copper network deployed many years ago. This has led to reliability issues and outages annually, which can cause phone and internet outages, creating risk for residents, businesses, police, and fire department.

Kimley-Horn has developed a work plan to provide focus for accomplishing stakeholders' needs and achieving the following objectives:

- Understand community needs and interest on an expanding network
- Improve broadband and internet connectivity throughout Gila County
- Determine feasibility of owning versus leasing assets
- Design for first/last mile and middle mile
- Evaluate cost for improvements
- Identify operation structures
- Determin funding sources to achieve affordable broadband

Our proposed approach to the project tasks is described in the following sections. Upon selection, the final scope will be finalized during discussions with the County.

Task 1: Project Management and Administration

This task provides project initiation and general project administration, including developing and maintaining the project work plan and schedule, managing project staff, providing quality control, and overseeing project accounting. This task also includes the kick-off meeting and bi-monthly progress calls.

Kimley-Horn will schedule a kick-off meeting in Globe (alternatively, meeting can be held remotely if requested) within two weeks of receiving the Notice-to-Proceed from the County.

Kimley-Horn has developed a preliminary schedule that includes all milestones and identifies deliverables and progress reporting dates, which can be found on page 24 of this proposal. The project team will review the schedule at the kick-off meeting, and Kimley-Horn will document comments and feedback received.

During the kickoff meeting, Kimley-Horn will review and confirm the County and Strategic Planning Team's expectations of the project, review known infrastructure assets, document project goals and objectives, and identify and discuss methods for collecting existing plans and other relevant information. With the County, we will also discuss other stakeholders that should be involved and actively participate in the project.

Kimley-Horn will prepare agendas and attend bi-monthly status update conference calls throughout the anticipated project duration. Up to two of these meetings may be held in-person to discuss draft reports or technical memorandum for project milestones as necessary. Meeting participation includes preparation, coordination, attendance, and meeting notes.

Task 1 Deliverables:

- Schedule – draft and final
- Kick-off meeting – attendance and notes
- Bi-monthly progress meetings – attendance and notes
- Monthly project invoices

Task 2: Needs Assessment

Under this task, Kimley-Horn will engage with the County staff and County Strategic Planning team to evaluate met and unmet broadband infrastructure, service, and access needs. This information will be gathered using the following methods:

- Review of Phase 1 documents, research, analysis, and planning previously completed by the County
- One County Strategic Planning team workshop

Kimley-Horn will conduct a County staff workshop with wide representation of County departments. The workshop will focus on establishing broadband infrastructure goals for public use, economic development, and County operations purposes that are consistent with the County's overall policies, priorities, and aspirations. It will also be focused on identifying the County's future information technology needs as it relates to network resources.

Kimley-Horn will summarize the results of this task in a memorandum submitted to the County for review and one consolidated set of comments. A final memorandum will be included in the Implementation Plan in Task 5. The draft memorandum will consist of the following:

- Summary of review of Phase 1 documents, previous research, analysis, and planning
- Summary of findings and outcomes from the workshop with County staff and the County Broadband Strategic Planning team
- Summary of assessment of the County's current and future network to meet projected needs
- Identification of trends within the County that will shape broadband use

Task 2 Deliverables:

- County Workshop summary
- Memorandum – Draft

Task 3: Inventory of Broadband Assets

The goal for this task is to review County assets, infrastructure, data, and information to determine the feasibility of existing infrastructure to install broadband assets across Gila County. Our first step is to gather readily available record drawings/as-builts/GIS files for the existing infrastructure, along with leased-line operational costs for key County facilities.

The second step is to identify key facilities across the County that may have capacity to host networking equipment or wireless antennas or that may have a desire for new network connections. Kimley-Horn will gather this data at the meeting with Gila County staff and the County Strategic Planning team in Task 2.

Additionally, Kimley-Horn will work with the County to identify up to four internet service providers (ISP) that provide broadband service in Gila County. This will include first and middle carriers such as APS, SRP, CenturyLink, and Sparklight. Kimley-Horn will work with County staff to set up meetings and informational interviews with each service provider to gather information regarding ISP network capacity and plans for expansion. Kimley-Horn will attend up to four meetings with ISP providers to gather the following data:

- Existing conduit, hub, and network links
- Existing underground network and expansions
- Existing wireless antennas
- Existing poles and policies for installing aerial fiber and wireless equipment
- Cost of fiber links and pole utilization

Kimley-Horn will also attend one meeting with the E-rate Coordinator and liaison staff for the County, which will serve to evaluate existing E-rate network and infrastructure and determine areas where current infrastructure can be used. We will also develop a summary of current E-rate network and opportunities for utilizing infrastructure.

We will compile all collected data into a GIS database and create up to two exhibits to show current infrastructure.

Task 3 Deliverables:

- ISP meeting summaries
- E-rate meeting and findings
- Up to two maps/exhibits on existing infrastructure

Task 4: Operational Structure and Funding Analysis

Under this task, Kimley-Horn will attend one meeting with the County team to discuss operational structures, and we will explore the feasibility for implementing Broadband Improvement Districts (BID). Kimley-Horn will work with County staff and the County Strategic Planning team to identify possible lines for districts and what business and property owners are included/could benefit from BIDs.

Kimley-Horn will also explore the feasibility for establishing a County Broadband Cooperative Association (BCA) and will work with the County team to understand business needs and gauge their interest in this option. Kimley-Horn will work with County staff to discuss up to one additional operational structure the County has interest in or would like explored. As part of this assessment, Kimley-Horn will outline the advantages and disadvantages of all three operational structures reviewed.

As part of this task, Kimley-Horn will explore financial resources and methods available for broadband infrastructure deployment. Kimley-Horn will research grant opportunities and tax increment options and review financing options that could be made available to the County—one of which being options provided by the Industrial Development Authority (IDA). Kimley-Horn, in coordination with the County team, will schedule one meeting with the IDA to discuss the funding needs and determine what options are available to the County.

The results of this task will be summarized in a memorandum submitted to the County for review and one consolidated set of comments. The final memorandum will be included in the Implementation Plan in Task 5.

The draft memorandum will consist of the following:

- Summarize findings regarding BID, cooperatives, and other operational structures
- Summary of meeting with IDA and options available to the County
- Other grant, funding, and cost-model opportunities that the County can consider

Task 4 Deliverables

- County Meeting summary
- Memorandum – Draft

Task 5: Implementation Plan

Using the draft technical memorandums and other information gathered in previous tasks, the Kimley-Horn team will prepare a Broadband Implementation Plan. This document will consist of the following:

1. A strategic vision statement describing the County's broadband development goals; the County's role in achieving these goals and the general types of initiatives, such as public-private partnerships and municipal-owned and managed systems; and direct engagement with service providers and regulators that the County will consider while pursuing these goals
2. An analysis of the overall broadband infrastructure available
3. Scenarios for coordinated use and possible integration of these resources
4. A summary of the E-rate network and opportunities to leverage infrastructure
5. A proactive strategy—including recommendations for implementable initiatives—for matching the broadband infrastructure, service, and access available in Gila County to the County's economic development needs, goals, and plans. This strategy will include near-term measures to match available technology and resources to the County's economic development objectives.
6. Operation structure options that can assist the County in achieving broadband goals
7. Financial resources and methods available to the County for broadband infrastructure development, management, and utilization. This assessment will include an analysis of available IDA funding, grant funding, and tax increment options.

The draft implementation plan will be submitted to the County and County Strategic Planning team for one consolidated set of comments. Comments will be addressed and incorporated into the final Broadband Implementation Plan.

Beyond this project, Kimley-Horn can also assist the County with the next steps for the Broadband Implementation Plan, which include estimates on the cost of each implementation phase, a conceptual road map for long-term implementation of all recommendations, and assistance with grant submittals. Kimley-Horn can also provide options and recommendations for new, updated, or amended County policies that will support the Broadband Implementation Plan's strategic vision, road map, initiatives, and programs. *The next-steps work would not be included in this project's fee.*

Task 5 Deliverables

- Broadband Implementation Plan – Draft and Final

Task 6: Design

Kimley-Horn has engaged a trusted teaming partner, BPG, to lead the design portion of this project. Kimley-Horn staff will work with BPG to ensure the designs meet the highest standards of excellence. The BPG team consists of over 100 local employees, including OSP designers, drafters, GIS specialists, surveyors, and project managers, who have over 25 years of experience designing, building, and maintaining large fiber-optic network infrastructures in Arizona. We will use our experience and the right technical experts for this project to guide the design approach to meet the County's design needs.

We will use information gathered in the previous tasks and the Implementation Plan to establish the basis of our design. We will leverage third-party telecom providers to help us develop a design to fit the needs of Gila County residents and to stay within project budget.

If awarded, we look forward to working with Gila County and the Gila County Strategic Planning Team to bring affordable internet connectivity to the residents and businesses in Gila County.

To meet the County's design needs, our team has prepared the below high-level design approach based on years of experience in designing, engineering, and deploying large fiber-optic based broadband infrastructures in Arizona, Nevada, and Southern California.

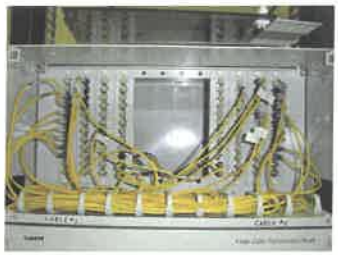

- **Software** — When designing a large fiber-optic network infrastructure, having the latest software to assist our OSP design and GIS specialists is critical to the success of the overall project. Our team utilizes three different yet integrated software platforms to accomplish this task:
  - **3-GIS** — This software is a cloud-based program that allows our team to create infrastructure design models quickly and efficiently. It allows us to model existing fiber-optic cables, street centerline, ducts, curb lines, or other utility lines and then generate preliminary network routes for constructability purposes. We have several team members that are certified 3-GIS Specialists. For more information regarding 3-GIS please visit https://www.3-gis.com/software
  - **Crescent Link Solutions** — Being forward thinking and innovative, we deployed a new software that integrates with the largest GIS/ mapping software, ESRI. Crescent Link has allowed our team to design from the IXP to the premise fiber cable strand counts, splice points, and splicing diagrams for a network in a fraction of the time to traditional ACAD input. For more information please visit https://geograph.tech/
  - **ESRI/ARC GIS** — Our team uses ARC/GIS to create 2-D and 3-D mapping solutions using our Mobile LiDAR trucks. The Mobile LiDAR trucks allow our survey team to collect field data more efficiently than traditional survey tools. The team has collected over 9,000 route miles in Arizona and has stored a petabyte (1024 terabytes) of data that we use to extract utility information for design/engineering, right-of-way, construction drawings, and permitting. For more information please visit https://www.esri.com/en-us/arcgis/products/arcgis-pro/overview

- **First Mile —** Connection to an IEP (internet exchange point) is the first step in the design phase of the project. Our team has worked with all the service providers in the state for over 20 years. We have access to several of the IEP's current fiber network infrastructures and future builds in the state and will work with them to analyze their current infrastructure in the area described in the RFP. This will allow the team to look at different cost models and designs that best fits the needs of Gila County and your initiatives for the project. We have relationships with several telecom providers, including APS, SRP, Century Link, Zayo Networks, Level 3, Conterra Networks, and Zona Networks.
- **Middle Mile —** Once we've determined where ISP providers have existing fiber for first mile, we will layout potential middle mile routes using ESRI and GIS. Based on these, we can develop high-level costs associated with the proposed routes. In late 2019, APS engaged our team to look at costing out fiber splicing and testing for a large expansion of the APS fiber network. Their plan is to bring fiber connection from Phoenix to Payson and then from Prescott to Flagstaff to bring connectivity to Gila and Navajo Counties. Along with this and other service provider initiatives for the area, we can look at cost models for drop points to FTTN/ Business off the middle mile design documents.
- **Last Mile —** After completing the middle mile design, our team will begin completing the node to the home and business footprint and provide cost models to bring fiber connection directly to the business or home. This would include, per the RFP: Young, Pine/Strawberry, Rim Community Ring, and Tonto Basin. Using our knowledge of County or local agency assets, we will input data into ESRI/ GIS, so we can determine where to splice off to get to communities and where potential nodes could be.

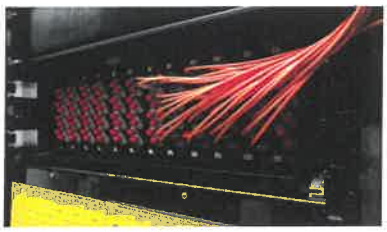

The design will follow a sequential process, building off of previous tasks to develop the overall design and cost analysis. We anticipate the high-level design to include analysis of broadband fiber designs, including lease of conduit, utilizing existing telecom poles, utilizing existing dark fiber, and proposed new underground and aerial routes. This design will be done using ARC GIS, and we will create exhibits to outline the design.

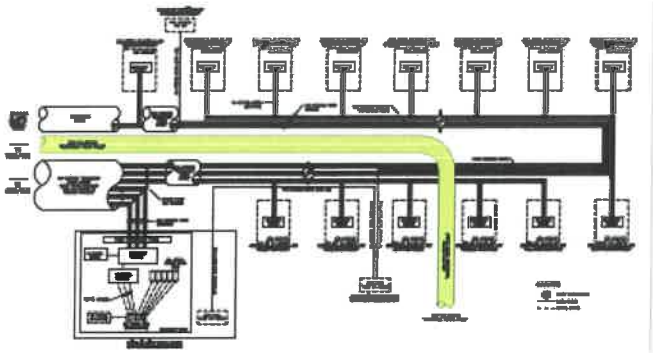

We have extensive experience with cost analysis and developing cost models for this type of design work. We will specifically develop models showing the cost difference between gigabit connectivity and a lower speed connection, so the County can evaluate cost variations when determining options. We will use our experience and connections with providers to provide accurate cost models for each scenario: first, middle, and last mile.

Task 6 Deliverables

- High-level design exhibits
- Cost models for first, middle, and last mile

Task 7: Community Engagement

Kimley-Horn's proposed community engagement plan starts with outreach via email, media press release, and social media to a wide audience to garner adequate and diverse attendance at meetings.

Next, we will summarize the information already collected in previous tasks to build a case for why a robust and reliable broadband infrastructure is a common need for all community members to thrive and grow. This project background, goal, and objectives summary will set the stage for communicating the important role the anchor institutions have in helping the state and school districts solve broadband infrastructure problems. Kimley-Horn will prepare a presentation that includes the network design and operation, network costs, network reliability, funding options, and potential operation structures.

Third, we will develop a series of community questions that allows us to gather the data needed during our outreach efforts. This can be in the form of

hard copy questionnaire at meetings or digital means, such as SurveyMonkey, prior to meetings, as well.

Lastly, the Kimley-Horn team will conduct up to two community meetings, one in person in Payson and one in Globe, via virtual methods, or a combination of both. The purpose of these meetings is to obtain feedback from the community regarding broadband uses, broadband needs, and high-speed broadband network interest. At the meetings, we will present information, ask the questions developed, and collect feedback from community members.

Kimley-Horn also has experience and the capability to reach out to under-provided groups, which could include the following: low-income individuals, English-as-a-Second-Language (ESL) residents, elderly (70+ years old), pre-retired (50-70 years old), small business owners, and students.

Task 7 Deliverables

- Outreach material
- Meeting presentations
- Survey questions and results
- Meeting documentation

Task 8: Broadband Website Updates

Kimley-Horn has experience creating and managing websites for public entities and organizations. As part of this task, the webmaster (Kimley-Horn's Deanna Haase, P.E.) will review the implementation plan, community engagement findings/feedback, costs, and design plans to determine key factors to highlight on the Gila County website. The webmaster will verify the following:

- Content is approved by Gila County Project Manager and Strategic Planning team
- Content is pertinent and will be a resource to website viewers
- Content will match Gila County website visual theme

Task 8 Deliverables

- Updated website

References

We encourage you to contact our references below and discuss the quality of our services:

CLIENT/PROJECT: City of Yuma Regional Broadband/Fiber Master Plan
CONTACT NAME: Kathleen Fernandez
TITLE: Chief Information Officer
EMAIL AND PHONE: kathleen.fernandez@yumaAZ.gov, 928.373.4900

CLIENT/PROJECT: KDOT Statewide Communication Integration Support
CONTACT NAME: Shari Hilliard
TITLE: ITS Engineer
EMAIL AND PHONE: shari.hilliard@ks.gov, 785.296.6356

CLIENT/PROJECT: VDOT Statewide Transportation Communication Master Plan
CONTACT NAME: Ken Earnest
TITLE: Assistant Division Administrator
EMAIL AND PHONE: ken.earnest@vdot.virginia.gov, 804.786.9743

Cost

Based on our proposed approach, we propose that the effort required to complete the Scope of Work to meet Gila County's goals and objectives can be accomplished within a not-to-exceed budget of $50,000.

Schedule

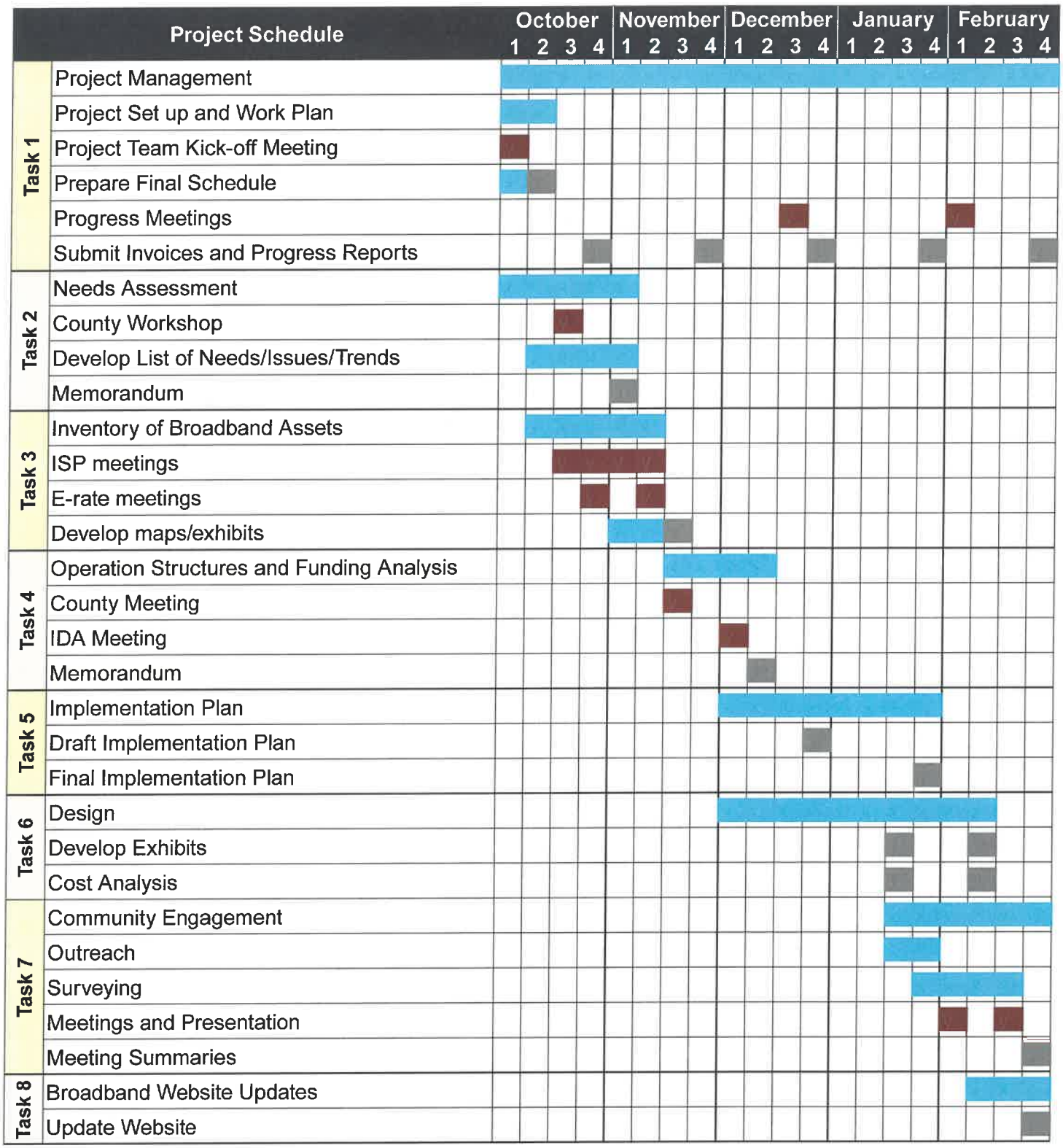

Duration of Task Meeting/Workshop Deliverable

This schedule is dependent on ability to maximize stakeholder participation/attendance, and timely responses to requests and reviews.

Section F. **RESPONSE CERTIFICATION**

September 3, 2020
(DATE)

Purchasing Services Department

The undersigned certifies that to the best of his or her knowledge: (check one)

☒ There is no officer or employee of Gila County who has, or whose relative has, a substantial interest in any Contract award subsequent to this Response.

☐ The names of any and all public officers or employees of Gila County who have, or whose relative has, a substantial interest in any Contract award subsequent to this Response are identified by name as part of the submittal

The undersigned further certifies that their firm (check one) ☐ **IS** or ☑ **IS NOT** currently debarred, suspended, or proposed for debarment by any federal or state entity. The undersigned agrees to notify the County of any change in this status, shall one occur, until such time as an award has been made under this procurement action.

In compliance with Request for Proposals No. 071320 Master Broadband Plan Phase 2 for Gila County, and after carefully reviewing all the terms and conditions imposed therein, the undersigned agrees to furnish such services in accordance with the specifications/scope of work according to the Proposal submitted or as mutually agreed upon by subsequent negotiation.

(signed)

Brian R. Smalkoski, P.E., AICP, PTP, PTOE
(by)

Kimley-Horn and Associates, Inc.
(firm)

Vice President / Authorized Signer
(title)

7740 N. 16th Street, Suite 300
Phoenix, AZ 85020
(address)

602.906.1100
(phone number)

September 3, 2020

Betty Hurst
Contracts Administrator
Copper Building
1400 E. Ash Street
Globe, AZ 85501

RFP# 071320 – Master Broadband Plan for Gila County, Arizona

Betty,

The mission of EntryPoint Networks Consulting Group is to assist municipalities in developing actionable Broadband Plans that become a key enabling step toward the City/County controlling its broadband future. The ultimate measure of success for EntryPoint's consulting services is whether a successful and sustainable network is developed.

Philosophically, EntryPoint is a proponent of Open Access networks because of the ability of open access networks to enable competition and innovation. However, the consulting work EntryPoint does is model neutral. A key aspect of our recommended Scope of Work will be an analysis of the model's other cities have successfully implemented.

EntryPoint's first consulting project was for the City of Ammon, in eastern Idaho. More than 100 articles have been written about the Ammon Network. At the 2017 Mountain Connect Conference, Christopher Mitchell from *The Institute of Local Self Reliance (ILSR)* was one of two lunch time panelists being interviewed by the University of Colorado's Phil Weiser. Mr. Weiser asked: "What municipal broadband projects should cities be looking to replicate as we go forward?" Christopher Mitchell's response: *"Ammon, Idaho is way out ahead of everyone else."* In October 2019, Fast Company Magazine described the Ammon Network as "The Best Fiber Optic Network in America." And in July 2020, the Open Technology Institute released a comprehensive report documenting "The Cost of Connectivity 2020" globally. Ammon, Idaho is listed as the #1 lowest cost of fiber-optic broadband in the entire World.

EntryPoint's Consulting Group is currently under contract with municipalities in Idaho, Utah, Arizona, California, Indiana, Wisconsin, Kansas, Connecticut, and Massachusetts. Providing the same (or similar) services being requested by Gila County.

We completely understand the Scope of Work outlined in RFP# 0713020 and we would welcome an opportunity to assist Gila County with this project.

Thank you,

Devin H. Cox
EVP Business Development

Please direct questions to:
Devin Cox
801-518-7333
dcox@entpnt.com

EntryPoint, LLC
1949 West Printers Row
Salt Lake City, UT 84119
www.entpnt.com

Request for Proposals

MASTER BROADBAND PLAN

RFP Reference # 071320

RFP Response Submitted by

ENTRY POINT NETWORKS

September 3, 2020

RELEVANT PROJECT EXPERIENCE

The next 25 years will bring enormous change to the economy, to the livability of communities and to the demand on cities and counties to respond to change. Because the economy is now a digital economy and because communication must be on demand, this change will require networks that are evolvable, flexible, scalable, and locally controlled.

EntryPoint Consulting Services Group is uniquely positioned to help Gila County leaders carefully evaluate both the feasibility and potential impact of a county-wide fiber optic network. Gila County has the opportunity to build a network that is transformative. Our consulting group will provide a realistic projection on important financial, risk management, and customer acquisition considerations. Ultimately, feasibility and success of a municipal network is a function of getting enough homeowners and businesses to subscribe and remain loyal to the network. Value drives take-rate and take-rate drives project success. Making choices which create value for subscribers makes a project successful.

EntryPoint believes **the unique value proposition of a County broadband network is the possibility of designing a system that offers state-of-the-art network capabilities but is locally controlled and responsive to local interests and needs**. Our company is organized around that vision and committed to help cities and counties deploy next generation networks that are evolvable, flexible, software controlled, and scalable.

EntryPoint is currently under contract and actively working with municipalities in Idaho, Utah, Arizona, California, Indiana, Wisconsin, Connecticut, and Massachusetts providing the same or a similar Scope of Services being requested by Gila County.

REFERENCES

City of Ammon, Idaho
Bruce Patterson, IT Director
208-612-4054
bpatterson@ci.ammon.id.us

Ammon Municipal Fiber Network Status
Broadband Network Planning – Completed
Fiber Network Design – Completed
Fiber Network Backbone Construction - Completed
Fiber-to-the-Home Network Under Construction – Year 4
Current Network Take-rate = 67%
ISP Cost for 1 Gig Symmetrical Service = $9.99 per month
Total Cost of Symmetrical Gig with Infrastructure, M&O, and ISP Fees = $46.50 per month
Total Municipal Debt from Project = $0

City of Redding, California
Adam McElvain – Mayor
530-276-7012
atmcelvain@gmail.com

Redding Municipal Fiber Network Status
Broadband Master Plan and Feasibility Study – Completed
Fiber Network Backbone Construction Project – Approved by City Council
Community Outreach and Education Program – Ongoing

City of McCall, Idaho
Chris Curtin – InfoSys Manager
208-634-8999
ccurtin@mccall.id.us

McCall Municipal Fiber Network Status
Broadband Master Plan and Feasibility Study – Completed
Fiber Backbone Construction – Phase 1 – Completed
Fiber Backbone Construction – Phase 2 – In Process
Fiber-to-the-Home Pilot Project – Scheduled
Community Outreach and Education Program – Ongoing

City of Mountain Home, Idaho
Rick Sykes – Mayor
208-587-2104
rsykes@mountian-home.us

Mountain Home Municipal Fiber Network Status
Broadband Master Plan and Feasibility Study – Completed
Fiber Network Backbone Construction – In Process
Community Outreach and Education Program – Ongoing

SCOPE OF WORK

First-Mile & Middle-Mile

The County currently has proposals from SRP for a leased lit circuit and APS for a pair of dark fiber circuits. These proposals from SRP and APS give the County important initial building blocks on which to build a framework for a regional or County-wide network.

To go forward, important next steps include:

- Evaluate current options for first mile connectivity in conjunction with the SRP and APS proposals.
- Solicit and evaluate middle mile proposals from CenturyLink and Sparklight.
  - Payson to Phoenix
  - Globe to Phoenix
  - Payson to Star Valley
  - Pine to Strawberry
  - Communities along Houston Mesa Road
  - Hayden and Winkelman
  - Communities along SR 188 – North of Roosevelt Dam
  - Communities along SR 188 – South of Roosevelt Dam
  - Communities along SR 87 south of Payson
  - Globe to Miami
- Build a realistic network design and cost model for a County owned middle mile connection from the Internet Exchange Point (IXP) in Phoenix at 615 N 48 St or other appropriate IXP in Maricopa County to connect both Globe and Payson with independent middle mile paths.
- Provide analysis on the advantages and disadvantages of a publicly owned network for the First Mile and Middle-Mile in comparison to leasing the first mile from utility fiber networks like SRP, APS, CenturyLink and Sparklight. This analysis will include the costs to collocate and interconnect in Maricopa County, engineering, construction, detailed bill of materials, construction (installation) and ongoing operations.
  - Capture the constraints of building County owned middle mile infrastructure such as permits for national forest, BLM lands, etc.
- Summarize all the cost options and work with Broadband Committee to make a recommendation to the County Supervisors on the optimal 20-year strategy.

EntryPoint acknowledges that the Gila County Broadband Strategic Planning team may make reasonable changes to this list.

Review of Opportunities via E-rate Network in Gila County

The E-Rate program, funded through the Universal Service Fund (USAC), is a nationwide initiative of the Federal Communications Commission (FCC). In May 2020, Gila County received a $19 million award to expand broadband to build infrastructure to every school and library within the county. CableOne, now known as Sparklight, was selected via a competitive bid process to oversee the construction and operation of the network.

In July 2020, leaders from the Broadband Committee met with Sparklight to gain a deeper understanding of the roll-out planning and to determine if there is an opportunity for the County to obtain dark fiber or lit fiber leases from the E-Rate infrastructure Sparklight will build as part of a potential County-wide middle mile network. The initial indication from Sparklight is that they plan to install a 144-count fiber bundle and they are open to discuss opportunities to collaborate with the County once the infrastructure has been installed.

If selected to continue working with the County, the location and pricing information from APS, SRP, and Sparklight will be important for analyzing the cost and feasibility of existing (incumbent) middle mile connectivity options in the County. CenturyLink also has some middle mile fiber in the County which will also be included in the analysis.

Last-Mile

As stated in our opening, the feasibility and success of a municipal network is a function of strong take-rates (getting enough homeowners and businesses to subscribe) and then remain loyal to the network. Value drives take-rate and take-rate drives project success. Before Gila County can directly pursue a last mile strategy, it must first take several intermediate steps. EntryPoint will assist the County in its efforts to thoroughly evaluate key elements of building or enabling a last mile strategy that gives all stakeholders in the Gila County region the digital infrastructure that will by providing a **decision-making framework** for putting the necessary pieces in place.

Sample Decision Making Framework Form

Issue	BC Recommendation	Rationale
Recommend the infrastructure media type (Fiber, Wireless, Cable, DSL, other) to be used in the network.		
If recommending fiber optics, recommend either a Symmetrical or Asymmetrical architecture.		
Recommend a model which is the best fit for the County to achieve its objectives: > County Owned – Single ISP > County Owned – Dark Fiber Open Access > County Owned – Manual Open Access > County Owned – Automated Open Access > County Supported – Single ISP (PPP) > County Supported – Open Access (PPP) > Infrastructure Cooperative > Privately Owned & Operated (Sparklight)		
Make a recommendation on whether the County should operate the network or outsource Network Operations.		

Recommend whether the County should do the construction in-house or outsource network construction.		
Recommend whether the County should follow a Design/Build process or separate the Engineering and Construction functions, doing separate RFPs.		
Determine whether to work with the Arizona Association of Counties and the Board of Supervisors to enact legislation to expand the viable last mile legal structures available to Gila County.		
Make a recommendation on whether to use a Switched Ethernet vs Passive Optical Network PON architecture.		
Make a recommendation on whether to follow an Opt-in model vs. a Universal build (Voluntary participation vs everyone gets connected).		
There are two Middle Mile carrier proposals on the table. Provide a thorough analysis of Middle Mile options for the main corridors in the County and back to Maricopa County.		
Make a recommendation to build a 100% buried network, 100% aerial network, or a hybrid buried & aerial.		

Last Mile Infrastructure & Media

The primary media used for internet access today in the United States includes DSL, Coaxial Cable, Wireless, and Fiber Optics.

DSL stands for Digital Subscriber Line and it is one of the technologies used to provide Internet connectivity to homes and businesses. DSL uses existing telephone lines and a transceiver to bring a connection into a home or business and allows the household to use the Internet and make telephone calls at the same time. Verizon is the incumbent telephone company in Gila County and uses DSL technology. DSL is asymmetrical (the download speed is much faster than the upload speed), is typically shared between 32 or 64 homes, and is capable of download speeds up to 100 Mbps. However, most consumers accessing the internet via DSL experience speeds between 5 – 25 Mbps.

Coaxial Cable uses copper cable designed with one physical channel that carries the signal surrounded by a layer of insulation and then another physical channel, both running along the same axis – hence the coaxial name. Coaxial cable is primarily used by cable TV companies to connect transmission facilities to customer homes and businesses to deliver cable T.V. and internet access. Comcast is the incumbent cable company in the Gila County area. Coaxial Cable is asymmetrical, is typically shared between 32 or 64 homes, and is capable of download speeds up to 940 Mbps. A limitation of coaxial cable is that the signal begins to degrade after 360 feet.

Fiber Optic Cable sends information down strands of glass known as optical fibers which are about the size of a human hair. These fiber optic strands are capable of transmitting 25 Tbps today and researchers have successfully demonstrated a transmission experiment over 1045 km with a data-rate of 159 Tbps (*https://phys.org/news/2018-04-fiber transmission.html*).

Fiber-optic cables carry information between two places using optical (light-based) technologies which convert electrical information from the computer into a series of light pulses. Fiber Optic Cable is capable of symmetrical speeds up to 25 Tbps and the signal can travel as far as 60 kilometers without degrading.

Because the difference in capacity between fiber optics and alternative media is so significant, fiber optics should be the foundational media for any new broadband infrastructure project when financially feasible.

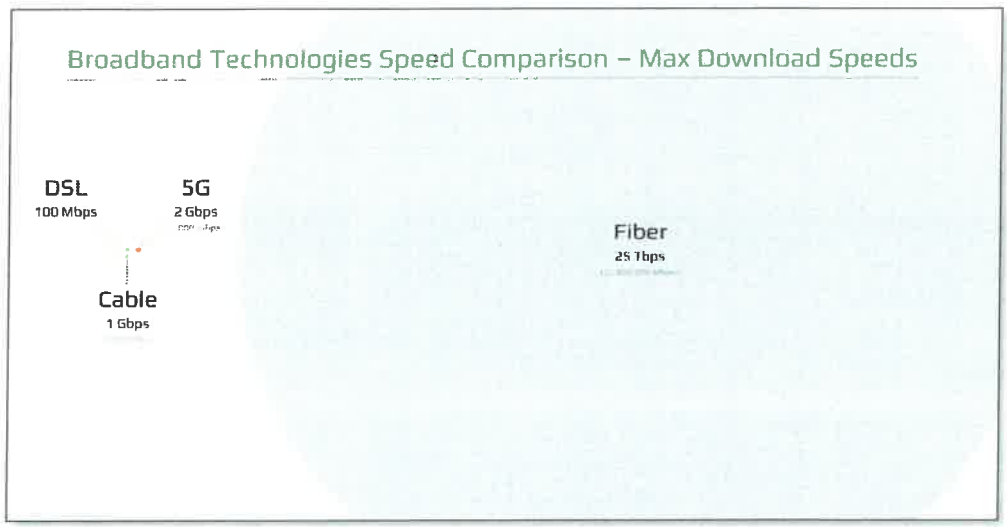

Wireless Internet access is made possible via radio waves communicated to a person's home computer, laptop, smartphone, or similar mobile device. Wireless Internet can be accessed directly through providers like AT&T Wireless, Verizon Wireless, T-Mobile or by a wireless Internet Service provider (WISP).

5G is the 5th generation of technology used in cellular networks and refers to a standard for speed and connection. Because of the extensive marketing around the emergence of 5G, many people wonder whether 5G will replace fiber optic cables. In fact, 5G depends on fiber optic infrastructure. All wireless technologies work better the faster they get back to fiber optics. The graphic above is not to scale (fiber has much greater capacity than the illustration represents) but this illustrates the magnitude of the difference between the different media types. The emergence of 5G is very early but there is a potential revenue opportunity for 5G carriers to operate on County infrastructure and contribute to the ongoing cost of network operations. Cellular networks can be symmetrical or asymmetrical and are sometimes capable of download speeds up to 2,000 Mbps

Wi-Fi is common in homes and commercial buildings and is a way to deliver a network connection from a network hub over a wired connection to wireless devices via a wireless access point. Most people access the internet over a wireless connection, but it is important to remember that wireless connectivity ultimately depends on a wired connection and wireless access works best the faster it gets back to a wire.

Upload vs Download Speeds

In addition to the fact that fiber optics offer exponentially greater bandwidth than DSL and coaxial cable, fiber optic cable also offers the ability to deliver symmetrical speeds. In an asymmetrical connection, the download speeds are much faster than upload speeds.

Upload speed is the amount of data a person can ***send*** in one second and download speed is the amount of data a person can ***receive*** in one second. Upload speeds can be especially important for businesses, including

home-based businesses or people who work from home. Applications that depend on good upload speeds include sending large files, cloud applications like Google Docs and Dropbox, VoIP, FaceTime, Skype, hard drive backups and In-house web hosting.

Transmission Distance

As described above, an additional benefit of fiber optic infrastructure is that a communication signal sent over fiber does not start to degrade for 45 miles while a signal sent over coaxial cable starts to degrade after 340 feet.

EntryPoint consistently encourages its clients to embrace fiber-optics as the foundation for a 50-year communications network. No other media is as future-proof because no other media has the capacity that fiber-optics offers. What is more, researchers are finding new ways to expand the capacity of fiber beyond the already remarkable speed and capacity it offers.

Last Mile Network Design & Cost Analysis

EntryPoint will provide a detailed design for a fiber to the network in the following communities:

- Young
- Pine-Strawberry
- Rim Community Ring
- Tonto Basin
- Payson
- Globe
- Miami

This design will include high level network design drawings, a detailed Bill of Materials, expected network performance, component unit cost, projected cost of engineering and projected cost of installation (construction). The design will include all materials and equipment required for the Central Office, subscriber premise equipment and outside plant equipment.

Additionally, EntryPoint will provide an equipment cost comparison between a Passive Optical Network (Bus Architecture) and an Ethernet Network (Switched Architecture).

Lastly, EntryPoint will provide a Network Operations model including suggested staffing, expected labor costs, expected revenue and other cash flow elements.

For an example of the detail EntryPoint produces related last mile design and cash flow analysis please refer to a copy of the Broadband Master Plan produced for Fairhaven, MA *[Attachment B]*.

Community Engagement

EntryPoint will work with the Broadband Committee to implement a Community Engagement plan tailored to match the strategy of the County as the decision-making process unfolds.

For the purposes of this RFP and the tools that will be utilized over the next 6 months, EntryPoint will do the following:

Community Survey

Under the direction of the Board of Supervisors and the Broadband Committee, EntryPoint will organize and execute a process to determine the level of interest for high speed internet across Gila County. EntryPoint will collect a statistically valid sample of the population across the County.

A statistically valid sample size for a population of 20,000 homes/businesses is 1,014. EntryPoint will take responsibility for obtaining a response rate that is statistically valid.

Calculate representative sample size

Sample size

Population size:	20000	How many people are in the group your sample represents? (The sample size does not change much for populations larger than 20,000.)
Margin of error:	3%	This is the plus or minus figure usually reported in newspaper or television opinion poll results. For example, if you use a margin of error of 4% and 47% percent of your sample picks an answer you can say that if you had asked the question to the entire population, between 43% (47-4) and 51% (47+4) would have picked that answer.
Confidence level:	95%	This tells you how sure you can be of the margin of error. It is expressed as a percentage and represents how often the true percentage of the population who would pick an answer lies within the margin of error.
Required sample size:	1014	Number of respondents needed
Estimated response rate:	20%	What percent of those asked to take the survey will do so. Response rates vary greatly depending on many factors incl. the distribution method (e.g. email, phone), type of communication (B2C, B2B...), quality of the invitation, use of incentives, etc.
Number to invite:	5070	This is the number of individuals out of the population you need to ask to participate in order to achieve the required sample size based on the expected response rate.

To do this, we would use the following strategies across the county.

- Targeted Banner Ads
- Flyers
- Mailers
- Local Press Releases
- Social Media Posts
- College Students (Door-to-Door Campaign)

The door to door campaign using college students will only be used as needed to drive the response rate to a statistically valid level. If the door to door campaign is utilized, the survey gathering team will be trained to strictly follow Covid-19 best practices.

The following is the current Gila County Community Broadband Survey. EntryPoint will work with the Broadband Committee to modify the current survey as needed to determine the level of interest for high speed internet across Gila County.

Gila County – Community Broadband Survey

1. Are you answering this survey as a residential property owner or a commercial property owner?

- Residential
- Commercial

2. On a scale of 1-5, how would you rate your current internet service provider for overall reliability, bandwidth speed, customer service, and cost.

- 1 - Poor
- 2 - Fair

- 3 - Good
- 4 - Very Good
- 5 - Excellent

3. What is your average internet connection speed?
   [I don't know. To test your speed: www.speedtest.net – Click on "GO"]

Download (Mbps) _____ Upload (Mbps) _____

4. How much do you pay monthly for your internet service? *(including modem rental, taxes, and fees)*

$ - Dollars

5. At what monthly cost would you be motivated to switch to another internet service provider for a 1 Gig service? (1000/1000 Mbps)

- $50 - $59
- $60 - $69
- $70 - $79
- $80 - $89
- $90 - $99

6. How important is Internet Speed and Bandwidth to you?

- Not Important
- Somewhat Important
- Very Important

7. How important is choice in Internet Providers and Internet Plans?

- Not Important
- Somewhat Important
- Very Important

8. Gila County is considering building a Fiber Optic broadband infrastructure throughout the county that would be open to any and all private sector service providers for internet access, voice, television, smart home, and other services.

Would you support county owned and operated Fiber Network Infrastructure if it facilitated more internet choice in a competitive environment, faster internet speeds, and lower prices?

- No
- Possibly *(I need more information)*
- Yes

Please enter your physical street address in Gila County.
[The reason we are asking for your address is to make sure the results are not manipulated by outside parties.]

Please enter your email address.
[Will only be used to provide additional information about the network.]

Update Existing Website

Work with the Gila County Broadband team to revise the existing website to reflect the current phase of decision making and the roadmap for 2021. As part of its fee, EntryPoint will update the website with the following:

a. Create Gila County specific content
b. Outline the core message of broadband as a utility
c. Communicate the broadband objectives for the County
d. Summarize expected benefits of a community fiber network
e. Explain options for new services in addition to Internet Service Providers
f. Update Frequently Asked Questions (FAQ's)
g. Include inquiry form where community members can submit questions
h. Add content related to partnering Cities/City in Gila County

Mapping Community Interest

Promote "I am interested" sign-up form with associated heat map where residential and business property owners can register as someone interested in municipal fiber.

Open House Events

EntryPoint will lead a series of Open House events where residents and business owners can hear an educational presentation, ask questions, and become educated about the Gila County fiber planning goals, process, and business model analysis. An additional purpose of these meetings will be to gather additional data regarding the level of community interest and commitment to high speed broadband in each community.

Open Houses can be promoted using utility bill inserts, press releases, public service announcements, local news reports, County websites, social media platforms, etc.

In addition to educating residents, Open House events are intended to help identify Fiber Champions in the various neighborhoods (fiber zones). Fiber Champions are individuals that are committed to promoting the network within their neighborhood. EntryPoint will work with the County to host community meetings in-person in the Payson and Globe area. If possible, in-person meetings will be expanded to 2-4 additional communities.

For these, meetings, EntryPoint will be responsible for preparing agendas and presentation materials. Feedback from the meetings will be documented. The meeting content will include:

- Current Broadband Objectives of the County and Broadband Committee
- Vision and Roadmap for Achieving Broadband Objectives
- Barriers to County-wide Deployment
- Financing Options Available to Pay for New Infrastructure
- Operational Structure for the Network Owner
- Expected Cost Structure for Residential and Commercial Subscribers
- Strategies that will be deployed to Optimize Network reliability
- Feedback from Community Members on their Support of the Current Objectives

Fiber Champions

An important outcome from community engagement efforts is identifying potential Fiber Champions to assist with engagement efforts within their designated neighborhood (fiber zone). Fiber Champions are influencers and people trusted in the community. As planning and execution moves forward, they help organize and lead education and engagement efforts. Gila County leaders and employees provide support to the Fiber Champions in their efforts.

Promotional Content

EntryPoint will assist in preparing social media content and inserts in monthly utility bills to notify residents of surveys, open house events, availability of new content on website, etc.

Network Operations Model – Municipal Broadband Models Comparison

EntryPoint will work with the Gila County Strategic Planning Team to provide County leaders and the Broadband Committee a decision-making framework for deciding which of the various broadband Operating Models is best suited for Gila County. The recommendation will be documented via a white paper and will include an overview of the opportunities, challenges, and feasibility of deploying, operating, and managing a fiber network that includes all elements of this scope of work. EntryPoint has existing customers that currently use 1) An Improvement District, 2) An Infrastructure Cooperative, 3) and Tax Increment Financing (TIF) – all in an Open Access model.

The Institute for Local Self Reliance has mapped municipal networks throughout the United States using an interactive map that can be found at the following link: *https://muninetworks.org/communitymap*

The decision-making framework will include an analysis of the advantages, disadvantages and feasibility of the available models including the analysis provided below:

To compare the various models that exist in the United States today, a mix of prominent municipal fiber optic projects were selected to illustrate the types of models that have been deployed. The following comparison summarizes different approaches to funding and operating municipal broadband infrastructure and services followed by a description of the advantages and disadvantages of each:

Municipality	Population	Model Type	Electric Utility	Take-Rate	Cost of 1 Gig
Chattanooga, TN	179,139	Electrical Utility ISP	Yes	60%	$68.00
Lafayette, LA	126,000	Electrical Utility ISP	Yes	40%	$99.95
Westminster, MD	19,000	County Fiber, Private ISP	No	20%	$89.99
Huntsville, AL	194,585	Dark Fiber Open Access	Yes	Not Published	$70.00
Sandy, OR	10,000	Municipal ISP	No	60%	$59.95
Longmont, CO	86,000	Electrical Utility ISP	Yes	55%	$69.95
Ammon, ID	17,000	Automated Open Access	No	65%	$47.50
Monmouth, OR	15,083	Municipal ISP	No	80%	$129.65
Lexington, KY	321,959	Private Partner Owned	No	Not Published	$59.95
Santa Monica, CA	110,000	Dark Fiber Business Only	No	N/A	N/A
Fort Collins, CO	165,000	Electrical Utility ISP	Yes	Early Stage	$59.95
UTOPIA	150,000+	Manual Open Access	No	15%	$70.00
Elkhart, IN	204,000	TIF, Open Access	No	Early Stage	$60.00
Idaho Broadband	20,000	Co-op Open Access	No	Early Stage	$60.00

Network Funding Analysis

Funding is necessary for each stage of network deployment:

- Connecting County Assets
- Community Engagement
- First Mile
- Middle Mile
- Last Mile

In some cases, the County may need to dedicate County budget for a particular project or initiative. In other cases, like building a County network to connect County assets, the County is already spending a significant amount of money to lease connectivity through incumbent networks. It may make sense to evaluate the Return on Investment of moving from leased connectivity to owned connectivity by building a County network. To rationalize County owned and operated infrastructure, the costs for Middle Mile connectivity will need to be included in the analysis.

As Covid-19 has demonstrated the essential nature of networks, the availability of grant funding has increased. There is a growing pool of funds available to rural communities through state and federal grants. EntryPoint will work with the County to identify and apply for grant opportunities that will support the execution of Gila County's Strategic Broadband Plan. EntryPoint will assist in the grant writing process by providing technical content as well as detailed implementation plans that can be used for county wide or regional initiatives.

Known grant opportunities include:

- RDOF Auction (Current and subsequent auctions)
- EDA Grants
- State of Arizona Grants

The funding / financing strategy for Last Mile infrastructure is dependent on the legal structures available to the County. Today, the County is constrained by the legislative barriers at the state level. EntryPoint will work with the Broadband Committee (BC), other counties, and statewide county associations to prepare content to expand the available legal structures available to the County.

EntryPoint will also work with the BC to prepare a White Paper summarizing the tools used by cities and counties in other states, including the advantages and disadvantages of various tools. This White Paper will be used to guide the work done on proposed changes to legislation.

As appropriate, EntryPoint will work with the BC to engage local Financial Advisor's familiar with the Arizona market as well as Arizona Industrial Development Authority (IDA) resources to evaluate financing that is available to the County for any of the stages listed above (Connecting County Assets, Middle Mile, Last Mile, etc.).

The IDA is a conduit issuer of municipal revenue bonds and the potential value of using the IDA as a financing partner is the possibility that borrowing costs may be through the IDA conduit. Financial Advisors (FA's) are retained to advise cities and counties on bond offerings. A Municipal Advisor must be registered with the SEC and is subject to fiduciary duties and other regulations.

Connecting County Facilities & Access

EntryPoint will prepare an analysis of the cost to connect and operate County buildings and existing strategic County owned infrastructure. This analysis will build on work that has already been done to analyze the current monthly / annual cost to lease connectivity from incumbent operators. EntryPoint will provide a Return on Investment model illustrating the number of years it will take to pay off this infrastructure and the pros and cons of shifting from a leased infrastructure model to a County Owned Infrastructure model.

The following is a summary of current leased connectivity costs:

Carrier	Department	Circuit ID	Speeds	IP	Phone/Cable
TMCI	County	ETSDIA1	250 MB	$3,595.00	
TMCI	County	WAN1GA	1 GB	$995.00	
TMCI	County	WAN1GB	1 GB	$995.00	
TMCI	County	WI230	50 MB	$462.12	
SuddenLink	County	None	100 MB	$1,488.01	
TMCI	Library	TMCI7613	50 MB	$1,602.67	
TMCI	Library	TMCI7613B	10 MB	$759.79	
MTE	BOS	58892	30x10 MB	$176.45	
SuddenLink	Education	Cable	150x10 MB	$243.40	
CenturyLink	Floodplain	DSL	7 MB	$96.00	$33.00
Crown Castle	Public Works	Tower Rental	N/A	$528.49	
MTE	Public Works	DSL	4 MB	$50.00	$103.16
Sparklight	Sheriff Office	Cable	300x30 MB	$260.00	$149.52
SuddenLink	Public Works	Cable	50x8 MB	$93.45	
SuddenLink	Education	Cable	150x10 MB	$243.40	
Sparklight	Emergency Management	Cable	200x20 MB	$328.89	
SuddenLink	County	Cable	100 MB	$1,551.61	
SuddenLink	County	Cable	100 MB	$1,000.00	
Verizon	Fleet	Cellular	5x5 MB	$50.00	
Verizon	Public Works	Cellular	5x5 MB	$50.00	
			Monthly Spend	$14,569.28	$285.68
			Annual Spend	$174,831.36	$3,428.16

TOTAL INTERNET/PHONE/WAN	
1 Year Spend	$178,259.52
10 Year Spend	$1,782,595.20
20 Year Spend	$3,565,190.40
30 Year Spend	$5,347,785.60

Project Implementation Plan & Associated Fees

Initiative	Timeline	Category	Fees
Work with BC and statewide officials to prepare legislative case authorizing Counties to utilize Improvement Districts for broadband deployments.	September	Legislative Engagement	$6,000
Prepare White Paper on business models and financing mechanisms available to the County including analysis of advantages and disadvantages of available options.	September	Business Model Financing/Funding	$3,000
Work with BC to identify, prepare, and submit Grant proposals.	September	Financing/Funding	$3,000
Analyze First Mile options including location and provider options.	October	First Mile	$1,500
Solicit and evaluate Middle Mile proposals from CenturyLink, Sparklight (E-rate network) and get APS proposal in writing.	October	Middle Mile	$1,000
Prepare analysis of the cost to connect and operate County buildings and assets.	October	County Network	$6,000
Compare projected costs to connect County buildings and assets to current expenses for leased connections and work with BC to make a recommendation to Board of Supervisors.	October	County Network	$1,000
Engage IDA, legal experts, and Financial Advisors to fully understand constraints of possible business models and financing mechanisms.	October	Business Model Financing/Funding	$1,000
Build a realistic network design and cost model for a County owned middle mile connection.	November	Middle Mile	$7,000
Analyze results for First Mile & Middle Mile & work with BC to develop recommendation.	November	First Mile & Middle Mile	$1,500
Prepare network design and cost model for Last Mile for specified communities.	November	Last Mile	$6,000
Work through **Decision Making Framework** for Last Mile including media type, architecture, single ISP or Open Access, County owned, or County supported, etc.	November	Last Mile	$2,000
Work with BC to develop and improve existing community engagement content including website.	December	Community Engagement	$5,000
Evaluate the level of interest for high speed internet across Gila County using surveys, education campaign, meetings with stakeholders and constituents.	January	Community Engagement	$6,000
		Total Project Fees	**$50,000**

Project Implementation Timeline

Month 1
Sept 2020

- Prepare Content for Legislative Action
- White Paper on Business & Financing Models
- Identify & Begin Work on Grant Proposals

Month 2
Oct 2020

- Work on First Mile and Middle Mile Analysis
- Analysis on Cost to Connect County Buildings & Assets
- Prepare recommendation for County Supervisors on Connecting County Assets
- Re-engage IDA & FA's

Month 3
Nov 2020

- Cost Model for County Owned Middle Mile
- Finalize Strategy for First Mile & Middle Mile
- Prepare Design & Cost Analysis for Last Mile
- Complete Decision Making Framework for Last Mile (Media, Architecture, etc.

Month 4
Dec 2020

- Update Community Engagement Content Including Website, Educational Materials, Webinar & Open House Materials
- Finalize Work from September - November

Month 5
Jan 2021

- Launch Community Engagement Efforts including Revised Website, Open House Meetings, Webinar Meetings, Other Educational Efforts
- Begin Final Report Preparation

Month 6
Feb 2021

- Prepare Final Report
- Presentation to Broadband Committee and County Supervisors

ATTACHMENTS

Attachment A – Gila County Response Certification Form

Attachment B – Copy of Fairhaven, MA – Broadband Master Plan

[Attachment A]

RESPONSE CERTIFICATION

September 3, 2020

Gila County Arizona
Purchasing Services Department
1400 E. Ash Street
Globe, AZ 85501

The undersigned certifies that to the best of his or her knowledge: (check one)

☒ There is no officer or employee of Gila County who has, or whose relative has, a substantial interest in any Contract award subsequent to this Response.

☐ The names of any and all public officers or employees of Gila County who have, or whose relative has, a substantial interest in any Contract award subsequent to this Response are identified by name as part of the submittal

The undersigned further certifies that their firm (check one) ☐ **IS** or ☒ **IS NOT** currently debarred, suspended, or proposed for debarment by any federal or state entity. The undersigned agrees to notify the County of any change in this status, shall one occur, until such time as an award has been made under this procurement action.

In compliance with Request for Proposals No. 093019 Master Broadband Plan for Gila County, and after carefully reviewing all the terms and conditions imposed therein, the undersigned agrees to furnish such services in accordance with the specifications/scope of work according to the Proposal submitted or as mutually agreed upon by subsequent negotiation.

DHCox
(signed)

Devin H Cox
(by)

EntryPoint Networks
(firm)

EVP Business Development
(title)

1949 West Printers Row, SLC, Utah
(address)

801-518-7333
(phone number)

[Attachment B

Fairhaven
Massachusetts

Broadband Master Plan

Prepared for the Fairhaven Town Council

August 2020

– Prepared By –

ENTRY POINT NETWORKS

www.entpnt.com

Fairhaven
Massachusetts

Broadband Master Plan

August 2020

Contents

I. Executive Summary

II. Strategy

III. SWOT Analysis

IV. Infrastructure

V. Assessment of Existing Broadband Infrastructure

VI. Market Analysis

VII. Community Engagement Plan

VIII. Broadband Survey Results

IX. Municipal Broadband Models Comparison

X. Network Design

XI. Project Partners

XII. Cost Analysis & Phasing

XIII. Financing Considerations

XIV. Legal Considerations

XV. Risk Analysis

Fairhaven
Massachusetts

Broadband Master Plan

August 2020

Executive Summary

In addition to lowering costs and delivering significant improvements in network speeds, additional objectives for the network include positively impacting economic development, livability, public safety, education, healthcare, emergency communications, smart grid, efficient government services, universal access, environmental stewardship and smart Town initiatives.

The Fairhaven Broadband Study Committee (BSC) has worked with EntryPoint Networks to develop this Broadband Master Plan to assist with a planning and decision-making process to assist the Fairhaven Select Board in determining whether it is feasible to deploy and operate broadband infrastructure for the residents, businesses and anchor institutions in the Town of Fairhaven. The information in this report will be used to assist in the planning and evaluation of feasibility for implementation of a network that can lower broadband costs and increase network value for all stakeholders in Fairhaven. Additionally, this report is designed to assist Town leaders in understanding the operational implications, important risk factors, and a realistic cost framework for developing and operating Town owned fiber optic infrastructure.

The Broadband Master Plan is a living document that will first be used to analyze feasibility. If the Select Board determines that the project has sufficient merit, the planning process will continue toward a formal RFP process for Engineering, Construction, and Network Management Tools. The specific steps to this process are covered at the end of this document in the Next Steps section.

The primary drivers for this analysis include an interest by the Board of Selectmen in lowering costs and improving network speed and reliability. This project also seeks to understand the potential for a high capacity broadband network to positively impact economic development, livability, public safety, education, healthcare, emergency communications, smart grid capabilities, efficient government services, universal access, environmental stewardship and smart city applications.

This report seeks to provide the data needed for Town leaders to thoughtfully plan and implement a communications infrastructure strategy that will benefit residents, businesses, and anchor institutions for years to come. Town leaders will be able to use this document to lay the groundwork to address the challenges of a project of this size and scope. The key focus of the report is on the following primary activities:

1) Network Design & Architecture
2) Cost Analysis for Construction
3) Cost Analysis Network Operations
4) Customer Acquisition
5) Risk Management

Strategy

Deploying a large-scale fiber optic network is a significant public works and information technology project.

Improve Affordability, Foster Competition and Choice, Enable Abundant Bandwidth, Solve the Digital Divide, Improve Network Reliability, Mitigate Risk for the Town, and Local Control of Essential Infrastructure.

Key Strategic Ideas guiding this Plan were established by the Broadband Study Committee and include the following:

1. **Improve Affordability** – The Town of Fairhaven seeks to promote policies and initiatives that will make internet access universally available and affordable throughout Town limits.

2. **Foster Competition & Choice** – The Town seeks to promote initiatives that will increase the number of service providers and types of services that are available to Fairhaven residents.

3. **Promote Abundant Bandwidth** – Town leaders seek for solutions that move from the current practice of treating bandwidth as a scarce commodity toward policies and programs which treat bandwidth as an abundant resource.

4. **Solve the Digital Divide** – Town leaders are interested in promoting access for all residents by making access affordable and by promoting ubiquitous infrastructure.

5. **Mitigate Risk for the Town, Constituents, and Partners** –Town leaders are particularly interested in implementing a business model which mitigates financial and operational risks to the Town and its partners while at the same time helping the Town achieve its other objectives.

6. **Improve Network Reliability** - Town leaders seek to promote network attributes that will increase reliability for residents, businesses, and anchor institutions within Town limits.

7. **Make Participation Voluntary** – A core component of the strategy the Town is advancing is to increase connectivity options for Fairhaven stakeholders but not compel residents or local businesses to subscribe to a particular program or initiative.

8. **Establish Local Control over Essential Infrastructure** - The economy is now an information economy and the importance of digital infrastructure continues to grow in significance. The Town of Fairhaven has an interest in ensuring that the Town has robust digital infrastructure and it is interested in promoting initiatives which will give the town greater influence over this important infrastructure.

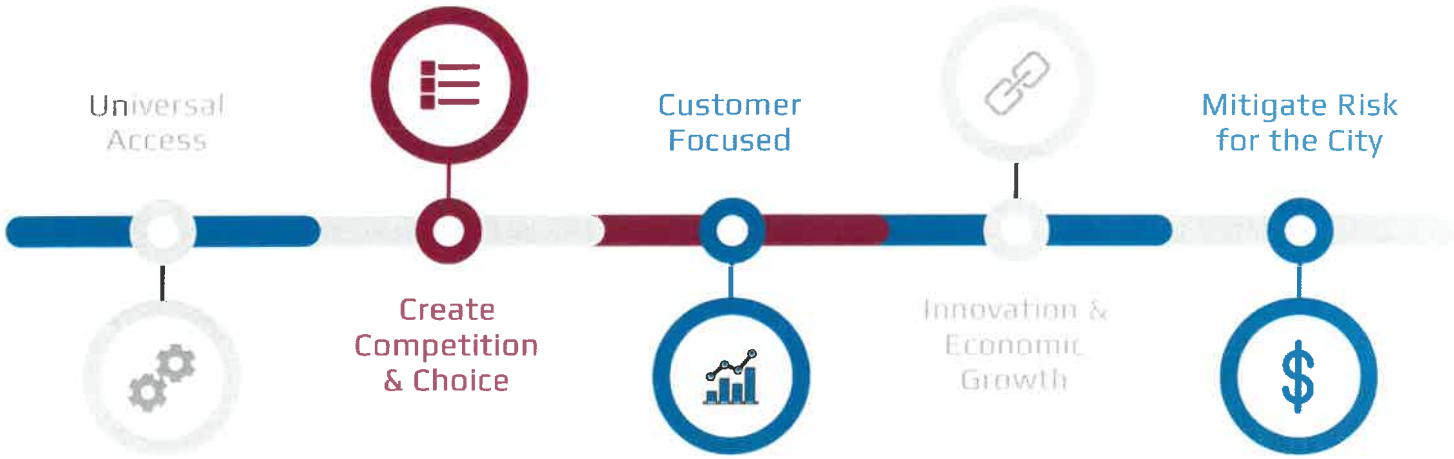

SWOT Analysis

The SWOT Analysis included here is not an analysis of current offerings within Fairhaven. Rather, the analysis considers the Strengths, Weaknesses, Opportunities and Threats related to advancing the projects under consideration in this report.

STRENGTHS	Support from frustrated subscribers. Operational experience with fiber optics (existing backbone). Community interest in increasing the number of choices. Potential regional interest. Consumer demand, timing following the pandemic and awareness of the importance of broadband has increased. Frustration with current systems has increased. Potential for access to stimulus spending focused on broadband.
WEAKNESSES	The Town is managing its own fiber network but has not done this at the scale of a Town-wide project. Some areas in the Town have ledge which may prevent a buried network. If the project is an aerial build, the Town will need to coordinate with the owners of the power utility poles. The Town has limited funds to contribute to the project.
OPPORTUNITIES	Better service, faster speeds, increased reliability, introduce competitive pricing, reduce costs, and increase speeds for local businesses. Impact on employment and economic growth, hotspots in strategic locations around the Town (Parks), low interest rate environment, improved property values.
THREATS	Community fear of government control and intervention. Resistance to change. Misinformation and propaganda. Potential for interest rates to increase. People will hear about failed projects. Undermine existing incumbents, fear of the unknown, fear of increased taxes, concern that new technologies will cause obsolescence of these technologies (5G). Project execution risk.

Infrastructure

Comparison of Available Media

The primary media used for internet access today in the United States includes DSL, Coaxial Cable, Wireless and Fiber Optic cable.

DSL stands for Digital Subscriber Line and it is one of the technologies used to provide Internet connectivity to homes and businesses. DSL uses existing telephone lines and a transceiver to bring a connection into a home or business and allows the household to use the Internet and make telephone calls at the same time. Verizon is the incumbent telephone company in Fairhaven and uses DSL technology. DSL is asymmetrical (the download speed is much faster than the upload speed), is typically shared between 32 or 64 homes, and is capable of download speeds up to 100 Mbps. However, most consumers accessing the internet via DSL experience speeds between 5 – 25 Mbps.

Coaxial Cable uses copper cable designed with one physical channel that carries the signal surrounded by a layer of insulation and then another physical channel, both running along the same axis – hence the coaxial name. Coaxial cable is primarily used by cable TV companies to connect transmission facilities to customer homes and businesses to deliver cable T.V. and internet access. Comcast is the incumbent cable company in the Fairhaven area. Coaxial Cable is asymmetrical, is typically shared between 32 or 64 homes, and is capable of download speeds up to 940 Mbps. A limitation of coaxial cable is that the signal begins to degrade after 360 feet.

Fiber Optic Cable sends information down strands of glass known as optical fibers which are about the size of a human hair. These fiber optic strands are capable of transmitting 25 Tbps today and researchers have successfully demonstrated a transmission experiment over 1045 km with a data-rate of 159 Tbps *(https://phys.org/news/2018-04-fiber transmission.html)*. Fiber-optic cables carry information between two places using optical (light-based) technologies which convert electrical information from the computer into a series of light pulses. Fiber Optic Cable is capable of symmetrical speeds up to 25 Tbps and the signal can travel as far as 60 kilometers without degrading.

Because the difference in capacity between fiber optics and alternative media is so significant, fiber optics should be the foundational media for any new broadband infrastructure project when financially feasible.

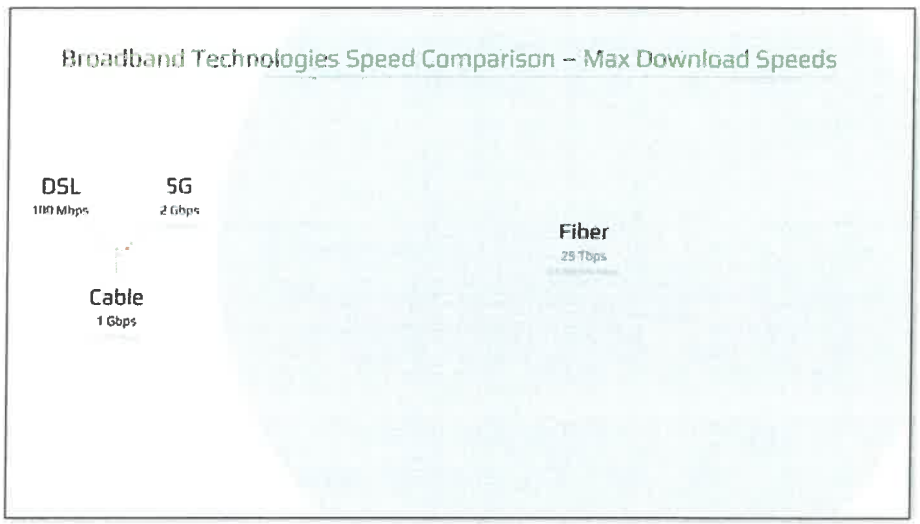

Wireless Internet access is made possible via radio waves communicated to a person's home computer, laptop, smartphone, or similar mobile device. Wireless Internet can be accessed directly through providers like AT&T Wireless, Verizon Wireless, T-Mobile or by a wireless Internet Service provider (WISP).

5G is the 5th generation of technology used in cellular networks and refers to a standard for speed and connection. Because of the extensive marketing around the emergence of 5G, many people wonder whether 5G will replace fiber optic cables. In fact, 5G depends on fiber optic infrastructure. All wireless technologies work better the faster they get back to fiber optics. The graphic above is not to scale (fiber has much greater capacity than the illustration represents) but this illustrates the magnitude of the difference between the different media types. The emergence of 5G is very early but there is a potential revenue opportunity for 5G carriers to operate on Town infrastructure and contribute to the ongoing cost of network operations. Cellular networks can be symmetrical or asymmetrical and are sometimes capable of download speeds up to 2,000 Mbps

Wi-Fi is common in homes and commercial buildings and is a way to deliver a network connection from a network hub over a wired connection to wireless devices via a wireless access point. Most people access the internet over a wireless connection, but it is important to remember that wireless connectivity ultimately depends on a wired connection and wireless access works best the faster it gets back to a wire.

Impact of Bandwidth on Applications

Length & Type of Media	Approx Size	10 Mbps	20 Mbps	100 Mbps	1,000 Mbps
4-Minute Song	4 MB	3 sec	1.5 sec	0.3 sec	0.03 sec
5-Minute Song	30 MB	26 sec	13 sec	2.5 sec	0.2 sec
9-Hour Audio Book	110 MB	1.5 min	46 sec	9.2 sec	0.9 sec
45-Minute TV Show	200 MB	3 min	1.5 min	16 sec	1.7 sec
45-Minute HDTV Show	600 MB	8.5 min	4 min	50 sec	5 sec
2-Hour Movie	1.0-1.5 GB	21.5 min	10.5 min	1.5 min	8 sec
2-Hour HD Movie	3.0-4.5 GB	60 min	32 min	4.5 min	25 sec
Large Archive File	10 GB	Too Long	Slow	Better	80 sec

Upload vs Download Speeds

In addition to the fact that fiber optics offer exponentially greater bandwidth than DSL and coaxial cable, fiber optic cable also offers the ability to deliver symmetrical speeds. In an asymmetrical connection, the download speeds are much faster than upload speeds.

Upload speed is the amount of data a person can ***send*** in one second and download speed is the amount of data a person can ***receive*** in one second. Upload speeds can be especially important for businesses, including home-based businesses or people who work from home. Applications that depend on good upload speeds include sending large files, cloud applications like Google Docs and Dropbox, VoIP, FaceTime, Skype, hard drive backups and In-house web hosting.

Transmission Distance

As described above, an additional benefit of fiber optic infrastructure is that a communication signal sent over fiber does not start to degrade for 45 miles while a signal sent over coaxial cable starts to degrade after 340 feet.

Assessment of Existing Broadband Infrastructure

Deloitte.

"The United States requires between $130 and $150 billion over the next 5–7 years to adequately support broadband competition, rural coverage and wireless densification."

"The primary finding of the Deloitte report is that legacy infrastructure needs to be replaced with Fiber Optic cable in the near-term to meet bandwidth demands."

A 2017 Deloitte Consulting analysis summarizes the current needs and realities for legacy broadband infrastructure in the United States this way:

"The United States requires between $130 and $150 billion over the next 5–7 years to adequately support broadband competition, rural coverage and wireless densification.

Despite the demand and potential economic benefits of fiber deployment, the United States lacks the fiber density in access networks to make the bandwidth advancements necessary to improve the pace of innovation and economic growth.

Some wireline carriers are reluctant or unable to invest in fiber for the consumer segment despite the potential benefits. Expected wireline capital expenditures range between 14–18 percent of revenue. Wireline operating expenditures can be 80 percent of revenue. Fiber deployment in access networks is only justified today if a short payback period can be guaranteed, a new footprint is being built, repairs from rebuilding after a storm or other event justifies replacement, or in subsidized geographies where Universal Service funds can be used. The largest US wireline carriers spend, on average, five to six times more on operating expenses than capital expenditures. Excessive operating expenditures caused, in part, by legacy network **technology restrict carriers' ability to leverage digital technology advancements. Worse, as legacy** networks continue to descale, the percentage of fixed costs overwhelms the cost structure **leading to even greater margin pressure."**

Citation: https://www2.deloitte.com/content/dam/Deloitte/us/Documents/technology-media-telecommunications/us-tmt-5GReady-the-need-for-deep-fiber-pov.pdf

The Deloitte report is not specific to infrastructure in Fairhaven, Massachusetts, but the conclusions from the Deloitte report are generally applicable. Telco and Cable operators in U.S. cities often have fiber to an aggregation point and then legacy infrastructure from the aggregation point to the premise.

The primary finding of the Deloitte report is that legacy infrastructure needs to be replaced with Fiber Optic cable in the near-term to meet bandwidth demands. There is no indication that incumbents intend to replace legacy infrastructure with Fiber Optic infrastructure in the near term and even if they did, this upgrade would solve the base infrastructure problem but it would not solve for the lack of competition or premium pricing for Gig speeds.

Legacy copper and coaxial infrastructure will need to be replaced with state-of-the-art infrastructure to meet the ever-growing demands for greater bandwidth and faster speeds. An important question is whether unique value can be derived by having the Town and its residents own and control this infrastructure or whether private companies should continue to own and operate all communications infrastructure.

Ideal infrastructure includes more than just the fiber optic cables running throughout the Town. Important infrastructure considerations include the electronics at both ends of the fiber as well

as systems that manage and control the network. As the Town deploys its infrastructure, the following are important considerations guiding its decision-making framework:

- **Capacity & Speed:** The demand for bandwidth and speed will continue to grow.
- **Emerging Services and Applications:** 5G, connected vehicles, edge computing, and virtual reality are all examples of emerging applications that have infrastructure dependencies. An important consideration is how flexible the business model and technology systems are to enable whatever may come.
- **Local Control:** An advantage of a network that is locally controlled is that the network can be much more responsive to local needs and may enable innovation and adaptation for emerging opportunities.
- **Local Resilience:** Many communities are not locally resilient against attacks on internet infrastructure. It is possible to design networks in a way that provides residents and businesses with a network that is locally resilient if, for some reason, middle mile connections are severed.
- **Privacy & Security**: Subscribers are becoming increasingly sensitive to security, privacy, and confidentiality controls.
- **Risk Analysis**: Consideration of the risks for all potential network stakeholders is an essential part of the planning process.

Market Analysis

In Fairhaven, most residents and businesses subscribe to wireline internet services from the cable operator (Xfinity Comcast) and telephone incumbent (Verizon).

Xfinity Comcast

Xfinity advertises the following residential ISP services in Fairhaven:

Speed (Mbps) [Down / Up]	Introductory Pricing [contract required]	Standard Pricing [not including taxes & fees]	Data Caps
25 / 3	$50.00	$55.00	300 GB
100 / 10	---	$78.00	500 GB
200 / 10	$40.00	$93.00	600 GB
600 / 12	$90.00	$103.00	1,000 GB
940 / 50	$90.00	$108.00	1,200 GB
2,000 / 50	$300.00	$300.00	1,200 GB

Shared Network – Speeds are "Up To" not guaranteed.
Speeds are not Symmetrical
Taxes and Fees additional (20%-30%) of Standard Pricing
Additional Data - $10.00 per 100 GB used
xFi Gateway Modem - $14.00 per month
Availability depends upon location – not available in all areas.

Comcast Business

Comcast advertises the following business ISP services in Fairhaven:

Speed (Mbps) [Down / Up]	Business Pricing [not including taxes & fees]	Contract Term Required	Install Fees and Data Caps
35 / 5	$70.00	2 Years	Not Disclosed
200 / 20	$100.00	2 Years	Not Disclosed
300 / 30	$150.00	2 Years	Not Disclosed
600 / 35	$220.00	2 Years	Not Disclosed

Shared Network – Speeds are "Up To" not guaranteed.
Speeds are not Symmetrical
Taxes and Fees additional (20%-30%) of Standard Pricing
Availability depends upon location – not available in all areas.

Verizon

Verizon advertises the following residential services in Fairhaven:

Speed (Mbps) [Down / Up]	Standard Pricing [not including taxes & fees]	Install Fee [not including taxes & fees]
1.1 / .3	$40.00	Not Disclosed
3.1 / .7	$40.00	Not Disclosed

Shared Network – Speeds are "Up To" not guaranteed.
Speeds are not Symmetrical
Taxes and Fees additional (20%-30%) of Standard Pricing
Soft Data Caps apply to all service plans
Availability depends upon location – not available in all areas.

Verizon Business

Verizon advertises the following business services in Fairhaven:

Speed (Mbps) [Down / Up]	Standard Pricing [not including taxes & fees]	Install Fee [not including taxes & fees]
1 / .3	$50.00	Not Disclosed
1.5 / .3	$63.00	Not Disclosed

Shared Network – Speeds are "Up To" not guaranteed.
Speeds are not Symmetrical
Taxes and Fees additional (20%-30%) of Standard Pricing
Availability depends upon location – not available in all areas.

Community Engagement Plan

The sample Community Engagement Plan that follows is built on an assumption that Fairhaven will go forward with a Town sponsored project. If the Town elects to support an alternative approach (Cooperative or public private partnership) the Community Engagement approach will change.

Goals & Objectives

The objective of a *Fairhaven Community Engagement Plan* is to achieve a minimum 40% take-rate for homes and businesses within Fairhaven Town limits. Additionally, a scale of 2,500 subscribers is an important target for the project to be operationally sustainable. In the financial section later in this report, the financial models are built to a target of a 60% take-rate. The modeling can easily be adjusted to match actual take-rates.

Evaluation & Education

Document the current state of broadband and determine the level of interest among residential users and business owners.

Community Survey

A survey for residents and business owners is in place to determine the level of interest in a municipal fiber network. It is important to drive response to the survey. Education and promotion programs should be influenced by survey engagement and response.

Publish Educational Information

Create a website specific to the municipal fiber program. Outline the core message of broadband as a utility that will support an environment of choice and subscriber control. Use customized videos to educate online visitors on the following:

a. Functionality of the community fiber network
b. Options for services
c. Frequently Asked Questions (FAQ's)
d. Inquiry Form where community members can submit questions to the municipality

Mapping Community Interest

Distribute an "I am interested" sign-up form with associated heat map where residential and business property owners can register as someone interested in municipal fiber.

Evaluation & Education Budget = $3,000 - $10,000

Marketing & Promotion

Fairhaven issues a series of Press Releases and sends out inserts in monthly utility bills promoting the municipal fiber program, driving traffic to fiber website with the goal of educating community members and generating interest and encouraging community participation in the survey.

Use all available social media platforms (Facebook, Twitter, etc.) to promote the fiber network.

Neighborhood Entrance and Yard Signs

As construction (fiber build) begins in a neighborhood, Fairhaven will post signs at neighborhood entrances announcing the construction and letting residents know they can still sign-up to get connected while crews are in the neighborhood.

As homes are connected in the neighborhood, yard signs are placed in the yards of subscribers indicating that the home now enjoys a fiber broadband connection.
Marketing & Promotion Budget = $10,000 - $15,000

Grassroots Engagement

Open House Events

Fairhaven holds a series of Open Houses where residents and business owners can hear an educational presentation about the fiber project, ask questions about the fiber project, become educated about the Fairhaven fiber plan, business model, etc.

Open Houses are promoted using utility bill inserts, press releases, public service announcements, local news reports, city websites, social media platforms, etc.

Open House events are intended to educate residents, promote the network, and identify Fiber Champions in the various neighborhoods (fiber zones). Fiber Champions are individuals that are committed to promoting the network within their neighborhood. Fiber Champions are also incentivized to be the first neighborhood to get connected (initial fiber zones are connected in order of take-rates – highest to lowest).

Fiber Champions

Fiber Champions assist sales efforts within their designated neighborhood (fiber zone). They organize and lead Cottage Meetings where neighbors come together to discuss the Fairhaven fiber program. Fairhaven leaders and employees provide support to the Fiber Champions in their efforts. Fiber Champions drive conversations and contractual commitments of neighbors via the Door-to-Door Sales and Education campaign.

Grassroots Engagement Budget = $2,000 - $5,000

Door-to-Door Campaign

Network sales agents (typically an independent group representing the network) contact residents and business operators within the planned network footprint to answer questions about the network and ascertain the potential subscribers' intentions regarding their participation in the network. [Yes (Opt-in) or No (Opt-out)].

This direct person-to-person contact gives everyone in the community an opportunity to ask questions, clarify their understanding and express their level of interest in participating.

To maximize the effectiveness of this process, prior to canvassing a neighborhood, door hangers are distributed to every home and business informing property owners that a representative will be stopping by to explain the value proposition, answer questions and get their Opt-in / Opt-out decision.

It is important that Fairhaven support this effort through public notifications, press releases, mass emails, websites, social media sites, mobile applications, and other community outreach venues available to Fairhaven. This may include outside professional marketing and/or PR firms.

Door-to-Door Sales Effort Budget = $100 per Premise that Subscribes
[Sign-up Fee or Wrapped into the Infrastructure Installation Costs]

Total Fairhaven Community Engagement Plan Budget = $15,000 to $30,000 + Door to Door Sales Commissions.

Please Note – The work outlined in the various Steps of this Community Engagement Plan, in whole or part, can be managed by internal Fairhaven personnel or can be outsourced to a professional marketing and promotions organization.

Fairhaven Broadband Survey Results

And the Survey Says...

In May 2020, the Town deployed a website to begin the process of educating the public regarding its evaluation of the feasibility of a Town sponsored fiber optic network. The Town distributed an initial survey to Fairhaven residents assessing current sentiment regarding existing services and the level of interest in a municipal network. The survey was not developed by professional survey administrators. To date key findings from the survey, include the following:

Total Responses	39		
Support Network			
	0	No	0.00%
	10	Possibly	25.64%
	29	Yes	74.36%
Internet Speed Importance			
	0	Not Important	0.00%
	9	Somewhat Important	23.08%
	30	Very Important	76.92%
	39	Important/Very Important	100.00%
Average Connection Speeds			
	39	Download	177 Mbps
	39	Upload	59 Mbps
Choice in ISP and Plans - Importance			
	3	Not Important	7.69%
	9	Somewhat Important	23.08%
	27	Very Important	69.23%
	36	Important/Very Important	92.31%
Rate Current ISP			
	13	Poor	33.33%
	11	Fair	28.21%
	9	Good	23.08%
	4	Very Good	10.26%
	2	Excellent	5.13%
	24	Poor/Fair	61.54%

Municipal Broadband Models Comparison

The Institute for Local Self Reliance has mapped municipal networks throughout the United States using an interactive map that can be found at the following link:

https://muninetworks.org/communitymap

To compare the various models that exist in the United States today, a mix of prominent municipal fiber optic projects were selected to illustrate the types of models that have been deployed. The following comparison summarizes different approaches to funding and operating

municipal broadband infrastructure and services followed by a description of the advantages and disadvantages of each:

Municipality	Population	Model Type	Electric Utility	Take-Rate	Cost of 1 Gig
Chattanooga, TN	179,139	Electrical Utility ISP	Yes	60%	$68.00
Lafayette, LA	126,000	Electrical Utility ISP	Yes	40%	$99.95
Westminster, MD	19,000	City Fiber, Private ISP	No	20%	$89.99
Huntsville, AL	194,585	Dark Fiber Open Access	Yes	Not Published	$70.00
Sandy, OR	10,000	Municipal ISP	No	60%	$59.95
Longmont, CO	86,000	Electrical Utility ISP	Yes	55%	$69.95
Ammon, ID	17,000	Automated Open Access	No	65%	$47.50
Monmouth, OR	15,083	Municipal ISP	No	80%	$129.65
Lexington, KY	321,959	Private Partner Owned	No	Not Published	$59.95
Santa Monica, CA	110,000	Dark Fiber Business Only	No	N/A	N/A
Fort Collins, CO	165,000	Electrical Utility ISP	Yes	Early Stage	$59.95
UTOPIA	150,000+	Manual Open Access	No	15%	$70.00

Municipal Broadband Models Defined – Summary | Pros | Cons

City Owned & Operated, Single ISP

Summary: The city or Town owns and operates the network and is also the sole service provider on the network.

Pros: This model can be successful when incumbent operators have some combination of the following: monopoly or near monopoly status, high prices, poor infrastructure, slow speeds, a poor reputation, and widespread customer resentment.

Cons: A single ISP does not significantly expand choice or competition. There have been very few *City Owned & Operated, Single ISP* deployments that have been successful. The city or Town is essentially replicating the incumbent model and competing against the incumbent head-to-head. This model leaves the Town vulnerable to the incumbent dropping their price to influence the municipal take-rate and destabilize the municipal network.

Examples of this model include Sandy, OR and Monmouth, OR.

Municipal Electrical Utility Owned & Operated, Single ISP

Summary: The Municipal Electrical Utility owns and operates the network and is also the sole service provider on the network.

Pros: The most common municipal model that has been successful using a Single ISP approach has been the Electrical Utility model. A measure of this success can be attributed to the fact that the Electrical Utility has the advantage of having an established reputation in the community.

Also, electrical Utilities often have financial, customer service, and engineering expertise that may be beneficial to the network and the skill set for Outside Plant personnel for a municipal network is similar in kind to the existing range of skills in an Electrical Utility. The likelihood of success increases in instances where the incumbent operator has monopoly or near monopoly status, higher than average prices, poor infrastructure, slow speeds, a poor reputation and/or widespread customer resentment.

Cons: A single ISP does not significantly expand choice. Expertise in network operations will need to be enhanced or developed. This model is essentially replicating the incumbent model and involves competing against the incumbent head-to-head. This model leaves the city / Electrical Utility vulnerable to the incumbent dropping their price to impact the take-rate and destabilize the network.

Examples of this model include Chattanooga, TN and Longmont, CO. Fort Collins, CO. is in the early stages of deployment and is replicating this model.

Dark Fiber, Open Access

Summary: Dark Fiber Open Access is a model where the city builds infrastructure to the curb and the subscriber then selects an ISP as its provider and the ISP finishes the connection to the home with its own infrastructure and electronics.

Pros: Open Access increases choice for consumers. Operating a dark fiber network is less complicated than operating a lit network. The Dark Fiber model enables Public ownership of infrastructure.

Cons: The Dark Fiber model gives up control over last mile infrastructure, i.e., the drop from the curb to the premise. The Dark Fiber model therefore limits the usability of each strand of fiber. With an isolated dark fiber connection, it is impossible to connect to other services that may not be available through the ISP that controls the drop to the customer premise. The Dark Fiber Model may not scale easily due to difficulty in anticipating the required fiber count to meet the demand. This can create significant complications for the network operator.

An example of this model is Huntsville, AL.

Manual Open Access

Summary: Manual Open Access is a model where the network is lit end to end. This means that the network operator places and controls the electronics at both ends of the network. In this model, switching service providers can be requested from a web portal and may appear to be automated but the network provisioning is not automated.

Pros: A manual Open Access network increases choice for consumers.

Cons: Operating a Manual Open Access network is more complex than operating a Single ISP network because of the requirement for human management of network tasks. Any increase in the number of service providers operating on the network adds to network complexity.

An example of this model is the UTOPIA Network. UTOPIA is the largest manual open access network in the United States with just over 20,000 premises connected. UTOPIA struggled under heavy debt obligations for 15 years but is now operating on a sustainable trajectory. In addition to UTOPIA, there are several Manual Open Access networks throughout Europe.

Automated Open Access

Summary: Automated Open Access is a model where the network operator places electronics at both ends of the network and subscribers can dynamically select service providers in real-time. Software Defined Networking is used to automate various network management tasks.

Pros: Multiple service providers can deliver services simultaneously and independently across a single wire. When a subscriber selects a new service provider, the provisioning is done using automation and therefore happens on-demand. The automated provisioning creates a marketplace for services which includes ISP's and private networks for other services. The ability to switch service providers on demand increases choice and competition. This network model also includes the ability to provide local network resilience via local communications if connections over the middle mile are down.

Cons: The model was first implemented in late 2016. Ammon, ID is the only city that has a full implementation operating today.

Examples of this model include Ammon, ID and early stage deployments in McCall, Idaho, Mountain Home, Idaho, and Elkhart County in Indiana.

Disclosure: EntryPoint Networks owns and operates a SaaS model Automated Open Access solution and is the technology solution provider in these networks.

Private Sector Owner & Operator, Single ISP

Summary: A private builder designs, builds and operates a network. The private entity is also the sole ISP on the network – replicating the incumbent model.

Pros: A private builder and operator assumes all the risk and does the work of overseeing design, project management, construction, customer acquisition and operations. This model increases the choices available to consumers with minimal obligation or burden for the city.

Cons: The new operator is replicating the incumbent model. There is no local control over infrastructure and ISP choices increase by just one new provider. There is no guarantee that the operator will address the digital divide. The network can be sold to another operator.

There are many examples of over-builders but Lexington, Kentucky is a recent example.

Private Sector Owner & Operator, Open Access

Summary: A private builder designs, builds and operates a network. The private entity uses an Open Access model rather than the incumbent model for service delivery.

Pros: A private builder and operator assumes all the risk and does the work of overseeing design, project management, construction, customer acquisition and operations. This model provides an increase in the choices available to consumers at almost no cost to the city. Risk exposure to the city is very low. The private builder/operator builds and stabilizes the network and may give the city the option to acquire the network after an agreed upon number of years for a premium price above the actual cost to develop.

Cons: There is no local control over infrastructure. There is no guarantee that the operator will address digital divide issues. A private owner will be free to sell the network to a new operator that may or may not be aligned with community objectives for the network.

An example of this model is Fullerton, CA (SiFi).

Cooperative Owned & Operated, Open Access ISP

Summary: A fiber-optic infrastructure cooperative owns and operates the network using an Open Access model.

Pros: The subscribers to the network are the owners of the infrastructure. This creates local control over infrastructure. The speed to market can be much faster than municipal ownership because the model is established up front. The model gives subscribers choice and competition among service providers which will likely lead to lower pricing in comparison to incumbent operators. Probability of success increases when incumbent operators have some combination of the following: monopoly or near monopoly status, high prices, poor infrastructure, slow speeds, a poor reputation, and widespread customer resentment.

Cons: It is more difficult to obtain financing because the cooperative has no assets at the beginning of the project. If financing can be obtained, the cost of money will be more expensive than a city or town sponsored project.

Funding Considerations

As the Town evaluates which model is optimal for Fairhaven, the following funding issues should also be considered:

Tax Non-Participants – If Fairhaven decides to pursue a municipally controlled network, an important funding question is whether the Town should pursue a General Obligation Bond to deploy broadband infrastructure ubiquitously to every premise in the Town? Today, most Cities/Towns do not have the political will or inclination to build broadband infrastructure through a funding mechanism that taxes all residents, essentially mandating participation, regardless of whether the resident chooses to participate as a consumer of network services.

Voluntary Participation – The alternative to taxing all residents is to deploy a business model that allocates network costs to voluntary participants. Allowing subscribers to voluntarily opt-in to network participation honors individual preferences for residents and businesses, eliminates Political Risk and can increase public support for the network. Allowing subscribers to voluntarily opt-in or opt-out of network participation is less efficient and more expensive than a model that mandates universal participation. Further, voluntary participation may exacerbate the digital divide. If the Board of Selectmen and other Town leaders agree with the strategic priority for **Fairhaven's Broadband Study Committee to not compel participation**, the Town should pursue a model that allows for voluntary participation.

Network Design

Switched Ethernet Network

The Switched Ethernet architecture provides a dedicated connection for each customer rather than a shared connection and the customer experience is significantly better than in a shared architecture during periods of network congestion. This is due to the fact that the throughput of switch-based architecture is superior to a bus-based architecture during times of network congestion.

Passive Optical Network (PON)

Passive Optical Networks (PON) and Coaxial (Cable) networks follow a Bus architecture.

A Bus architecture is a shared architecture. A splitter is placed in the field and a connection is often shared between 32 or 64 premises. The Bus Architecture leads to more packet collisions on the network which can result in high amounts of packet loss during congestion. Additionally, it is more difficult to isolate and troubleshoot faults in the network with a bus topology.

Passive Optical Network (PON) Design

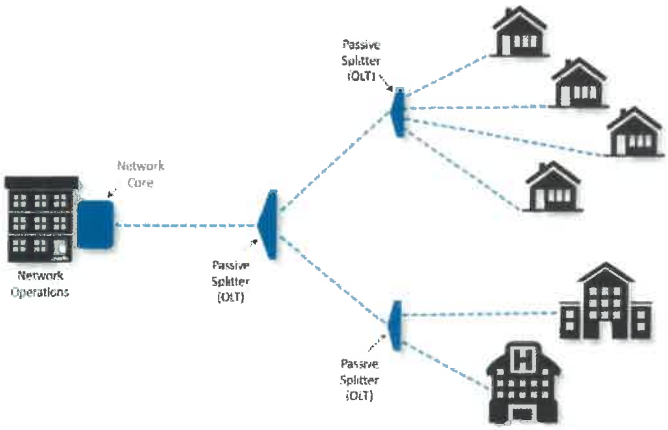

Switched Ethernet Network Design

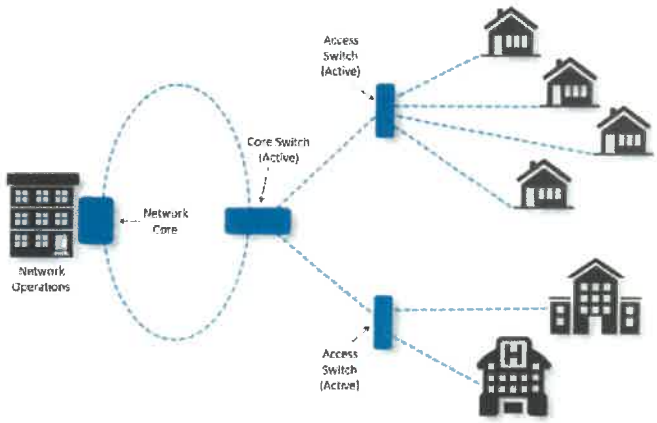

Proponents of PON Architecture will argue that PON is less expensive than an ethernet design. That was true historically. The illustration below shows that the variable costs of a switched ethernet deployment is now equal to PON. This change in pricing differences was driven by the fact that all Data Center deployments use Switched Ethernet architectures and the enormous growth of Data Centers over the past 20 years has driven down the cost of Ethernet electronics.

PON - Network Access Equipment

Description	Unit Cost	Qty	Extended Cost
Install Package	$696.50	1	$696.50
OLT	$4,196.50	2	$8,393.00
10GE SFP+	$837.90	2	$1,675.80
2x 1GE BIDI CSFP	$157.50	24	$3,780.00
Access Line-up			$14,545.30
Number of Subscribers Served			96
Average Cost per subscriber			$151.51

Ethernet - Network Access Equipment

Description	Unit Cost	Qty	Extended Cost
Switch	$1,700.00	2	$3,400.00
SFP	$12.00	96	$1,152.00
Access Line-up			$4,552.00
Number of Subscribers Served			96
Average Cost per subscriber			$47.42

PON - Premise Equipment

Description	Unit Cost	Qty	Extended Cost
Indoor ONT	$225.15	1	$225.15
Power supply for 700GE ONT	$12.00	1	$12.00
Premise Line-up			$237.15
Number of Subscribers Served			1
Average Cost per subscriber			$237.15

Ethernet - Premise Equipment

Description	Unit Cost	Qty	Extended Cost
White Box VBG	$330.00	1	$330.00
1000Base 1310nm-Tx/1550nm RX 10km	$9.00	1	$9.00
Premise Line-up			$339.00
Number of Subscribers Served			1
Average Cost per subscriber			$339.00

Per Premise PON Equipment Costs

Total cost per Subscriber	**$388.66**

Per Premise Ethernet Equipment Costs

Total cost per Subscriber	**$386.42**

Project Partners

Middle Mile

"Middle-mile" is an industry term that describes the network infrastructure that connects local networks to service providers at an Internet Exchange Point. The "last mile" is the local part of a communication network which connects a service provider to a customer. Current Middle Mile options include Comcast (Current provider), Open Cape (10 Gig) and IDS (10 Gig).

Approximately 2,500 customers can be served by a 10 Gbps circuit. If the Town pursues a Town owned network, it will need to adjust Middle Mile capacity according to take rate and utilization. Peak usage is an important data point for monitoring and is used to inform capacity planning. The cost of the middle mile connection should be allocated on a per subscriber basis.

Internet Service Providers (ISP) Partners

An Internet Service Provider gives subscribers access to the internet. The Town will need to determine what model it will follow or support before it engages one or more Internet Service providers. If the Town selects and Open Access Model, there are a number of ISP's that have expressed a verbal interest in being service providers to Fairhaven subscribers. The participation of these ISP's could be formalized through an MOU process.

Cost Analysis & Phasing

High Level Network Design

A high-level network design was done for a residential pilot neighborhood to build a cost model for that project. The Biarri Networks Fiber Optic Network Design Tool was used to create the design and calculate materials costs for these designs. The main cost categories for deploying and operating broadband networks are separated to optimize the costs in each of the following categories:

- Infrastructure Capital Costs *(Financed over 20 years)*
- Network Maintenance & Operations
- Services

Infrastructure Capital Costs

The cost modeling that follows assumes that the infrastructure that was deployed to connect Town Assets in 2018 has sufficient fiber count so that it can be leveraged as a Fiber to the Premise backbone.

Monthly Infrastructure Cost

The first illustration of Infrastructure Capital Costs per premise assumes a 60% take-rate and a project that is 100% underground. The data in the line items in this model come from a combination of the Biarri Network Design tool, actual bids for materials, and network buildout experience.

Take-rate is a variable that is critical to project success because the operational sustainability of a project depends on crossing a certain take-rate threshold and take-rate has a meaningful impact on the cost per premise.

Monthly Infrastructure Cost Modeled From 855 Premises

The second illustration of Infrastructure Capital Costs per premise assumes a 60% take-rate and a project that is 100% underground. We can adjust these variables on a neighborhood by neighborhood basis as needed.

Costs at 60% Take Rate			
100% Arial			
Description	Common	Drop	Total
Labor - Hours	10.42	2.50	12.92
Labor - Dollars	$625.00	$150.00	$775.00
Equipment	$185.36	$28.63	$213.98
Materials	$241.81	$79.36	$321.16
Supplies	$93.27	$5.63	$98.90
Restoration	$48.10	$1.76	$49.86
Hut/Cabinet	$108.07	$5.90	$113.97
Feeder Fiber	$36.02	$0.99	$37.01
Engineering	$37.10	$1.03	$38.13
Professional Services	$148.42	$15.16	$163.58
Electronics	$166.67	$350.00	$516.67
Subscriber Acquisition	$0.00	$0.00	$0.00
Total	**$1,689.80**	**$638.45**	**$2,328.25**
Backbone Cost Per Premise			$266.67
Total with Backbone			**$2,594.92**
Short Term Interest			$93.13
Total to be Capitalized			**$2,688.05**

Monthly Infrastructure Per Premise Cost	**$15.06**

Costs at 60% Take Rate			
80 % Buried | 20% Arial			
Description	Common	Drop	Total
Labor - Hours	18.75	4.50	23.25
Labor - Dollars	$1,125.00	$270.00	$1,395.00
Equipment	$333.65	$51.53	$385.17
Materials	$435.26	$142.84	$578.09
Supplies	$93.27	$5.63	$98.90
Restoration	$48.10	$1.76	$49.86
Hut/Cabinet	$108.07	$5.90	$113.97
Feeder Fiber	$36.02	$0.99	$37.01
Engineering	$37.10	$1.03	$38.13
Professional Services	$148.42	$15.16	$163.58
Electronics	$166.67	$350.00	$516.67
Subscriber Acquisition	$0.00	$0.00	$0.00
Total	**$2,531.53**	**$844.83**	**$3,376.37**
Backbone Cost Per Premise			$266.67
Total with Backbone			**$3,643.03**
Short Term Interest			$145.54
Total to be Capitalized			**$3,788.76**

Monthly Infrastructure Per Premise Cost	**$21.22**

Costs at 60% Take Rate			
100% Buried			
Description	Common	Drop	Total
Labor - Hours	20.83	5.00	25.83
Labor - Dollars	$1,250.00	$300.00	$1,550.00
Equipment	$370.72	$57.25	$427.97
Materials	$483.62	$158.71	$642.33
Supplies	$93.27	$5.63	$98.90
Restoration	$48.10	$1.76	$49.86
Hut/Cabinet	$108.07	$5.90	$113.97
Feeder Fiber	$36.02	$0.99	$37.01
Engineering	$37.10	$1.03	$38.13
Professional Services	$148.42	$15.16	$163.58
Electronics	$166.67	$350.00	$516.67
Subscriber Acquisition	$0.00	$0.00	$0.00
Total	**$2,741.97**	**$896.43**	**$3,638.40**
Backbone Cost Per Premise			$266.67
Total with Backbone			**$3,905.06**
Short Term Interest			$145.54
Total to be Capitalized			**$4,050.60**

Monthly Infrastructure Per Premise Cost	**$22.69**

Why Take-Rate is Important

The following table illustrates the impact of take-rate on total cost per premise with a rate of 60% as neutral on impact.

Take-Rate	Cost/Sub	Subscribers	Difference	vs. 60% Take-Rate
5.00%	$33,800.03	202	-	($30,161.63)
10.00%	$17,348.23	403	$16,451.80	($13,709.83)
15.00%	$11,864.30	605	$5,483.93	($8,225.90)
20.00%	$9,122.33	807	$2,741.97	($5,483.93)
25.00%	$7,477.15	1,009	$1,645.18	($3,838.75)
30.00%	$6,380.36	1,210	$1,096.79	($2,741.97)
35.00%	$5,596.94	1,412	$783.42	($1,958.55)
40.00%	$5,009.38	1,614	$587.56	($1,370.98)
45.00%	$4,552.39	1,815	$456.99	($913.99)
50.00%	$4,186.79	2,017	$365.60	($548.39)
55.00%	$3,887.67	2,219	$299.12	($249.27)
60.00%	$3,638.40	2,420	$249.27	$0.00
65.00%	$3,427.48	2,622	$210.92	$210.92
70.00%	$3,246.69	2,824	$180.79	$391.71
75.00%	$3,090.00	3,026	$156.68	$548.39
80.00%	$2,952.91	3,227	$137.10	$685.49
85.00%	$2,831.94	3,429	$120.97	$806.46
90.00%	$2,724.41	3,631	$107.53	$913.99
95.00%	$2,628.20	3,832	$96.21	$1,010.20
100.00%	$2,541.61	4,034	$86.59	$1,096.79

Full Town-Wide Deployment Infrastructure Network Operations

The following Table summarizes the anticipated cost structure for Network Maintenance & Operations. This schedule produces a monthly M&O fee for the Broadband Utility at $24.66 per month. The Town would need to subsidize network operations until enough scale is established to achieve sustainability.

Residential M&O	Subscriber	Monthly	Annual	Percentage
Costs/Accruals/Reserves	**$24.66**	**$110,964**	**$1,321,564**	**100.00%**
Power	$1.41	$6,329	$75,951	5.70%
Co-Lo Fees	$0.35	$1,582	$18,988	1.43%
Labor	$8.00	$36,000	$432,000	32.44%
Office	$0.58	$2,619	$31,428	2.36%
Vehicles	$0.73	$3,274	$39,285	2.95%
Tools	$0.21	$949	$11,393	.86%
Equipment	$1.18	$5,293	$63,511	4.77%
Supplies	$0.12	$546	$6,548	0.49%
Dig-line	$0.19	$873	$10,476	0.79%
Maintenance	$1.18	$5,293	$63,511	4.77%
Call Center	$0.36	$1,637	$19,643	1.48%
Network Operations Monitoring	$0.36	$1,637	$19,643	1.48%
Equipment Refresh costs (Reserves)	$4.00	$18,000	$216,000	16.22%
Licenses Fees (SaaS, Etc.)	$2.00	$9,000	$108,000	8.11%
Rentals	$0.50	$2,250	$27,000	2.03%
Bad Debt	$0.46	$2,073	$24,881	1.87%
Equipment Replacement	$0.02	$109	$1,310	.10%
Taxes and Fees (Property)	$0.00	$0	$0	0.00%
Middle Mile	$2.00	$9,000	$108,000	8.11%
Reserves	$1.00	$4,500	$54,000	4.06%
Total	**$24.66**	**$110,964**	**$1,331,564**	**100.00%**

Network Management & Operations Cost Structure

The numbers and categories in this model are derived from many years of experience with actual costs for Broadband projects. Labor costs are modeled to reflect Massachusetts wages.

Staffing Modeling for Internal Network Operations

The following Table models the cost structure for the positions needed for the Town of Fairhaven to operate the network as a Department within the Town structure. The model is conservative in the staffing estimates needed to operate the network in a sustainable manner. The model does not include resources for construction. Assuming the Town builds the entire network over a 12-month period, the Town will need to subsidize this department for less than 6 months. After that, the investment will be paid back by operational surpluses as subscribers grow beyond the target of 3,500 subscribers. The work that will be done by a Fiber Network Department includes network monitoring, network management, outside plant repairs, & new customer installations.

Position	Fully Compensated Hourly Rate	Fully Compensated Monthly Cost	Fully Compensated Annual Cost
Manager	$48	$8,251	$99,008
Network Admin	$38	$6,607	$79,290
I.T. Technician	$30	$5,266	$63,190
Outside Manager	$28	$4,767	$57,200
Outside Plant Tech	$22	$3,779	$45,344

Subscriptions & Staffing Projections

Subscribers	Year 1	Year 2	Year 3	Year 4
New Subscribers	4,500	---	---	----
# of Subscriber at year end	4,500	4,500	4,500	4,500
Labor Allocation	$8.00	$8.00	$8.00	$8.00
Cash Flow from Labor	$216,000	$432,000	$432,000	$432,000

Staffing Projections	Year 1	Year 2	Year 3	Year 4
Manager	.25	.5	.5	.5
Network Admin	.5	1	1	0.5
IT Technician	1	1	1	1
Outside Plant Manager	.5	1	1	1

Position	Year 1	Year 2	Year 3	Year 4
Manager	$24,752	$49,504	$49,504	$49,504
Network Admin	$39,645	$79,290	$79,290	$79,290
IT Technician	$63,190	$63,190	$63,190	$63,190
Outside Plant Manager	$28,600	$57,200	$57,200	$57,200
Outside Plant Laborer	$56,680	$181,376	$181,376	$181,376
Total	**$212,867**	**$430,560**	**$430,560**	**$430,560**
Net	**$3,133**	**$1,440**	**$1,440**	**$1,440**

Project Pro-Forma

Financial Pro-Forma of Full Project Costs – 1 Year Build – Ethernet Architecture

Projected Backbone	$1,200,000.00
Projected Cost Per Premise (Common and Drop)*	$3,376.37
Estimated Subscribers	4,500
Total Cost (Common & Drop) (Includes	$15,193,653.00
Professional Services	Included
Total Projected Project Costs	$16,393,653.00

** Assumes 80% Buried / 20% Arial, 60% take rate & short-term interest rate of 8% and long-term bond rate of 3% for 20 years.*

Projected Subscription Costs

Projected Residential Services Monthly Costs	80% Buried / 20% Arial
Infrastructure	$21.22
Maintenance and Operations	$24.66
ISP Service *(Dedicated 1 GB Symmetrical)*	$9.99
Monthly Total	$55.87

The Residential $9.99 monthly ISP fee listed above is based upon current pricing from the list of ISPs interested in providing services in Fairhaven.

Projected Capital Expenditures & Funding

Timeline	Year 1	Year 2	Year 3	Year 4 +	Total
Capital Costs					
Backbone	$1,200,000.00	$0.00	$0.00	$0.00	**$1,200,000.00**
Subscriber Drops	$3,801,753.00	$0.00	$0.00	$0.00	**$3,801,753.00**
Subscriber Common	$11,391,900.00	$0.00	$0.00	$0.00	**$11,391,900.00**
Interest Reserve (Drops)	$607,746.12	$0.00	$0.00	$0.00	**$607,746.12**
Interest Reserve (Backbone)	$48,000.00	$0.00	$0.00	$0.00	**$48,000.00**
Total	$17,049,399.12	$0.00	$0.00	$0.00	**$17,049,399.12**
Short Term Financing (Build Out)					
New Backbone	$1,200,000.00	$0.00	$0.00	$0.00	**$1,200,000.00**
Retired		-$1,200,000.00	$0.00	$0.00	**-$1,200,000.00**
Total	$1,200,000.00	-$1,200,000.00	$0.00	$0.00	**$0.00**
New Build	$15,193,653.00	$0.00			**$15,193,653.00**
Retired	$0.00	-$15,193,653.00	$0.00	$0.00	**-$15,193,653.00**
Total	$15,193,653.00	-$15,193,653.00	$0.00	$0.00	**$0.00**
Long Term Funding					
New Backbone		$1,248,000.00	$0.00	$0.00	**$1,248,000.00**
New Build		$15,801,399.12	$0.00	$0.00	**$15,801,399.12**

Projected Income & Cash Flow

Timeline	Year 1	Year 2	Year 3	Year 4 +
Subscribers				
New Subscribers	4,500	---	---	---
# of Subscriber at year end	4,500	4,500	4,500	4,500
Income Statement (Revenue)				
Infrastructure Fees	$572,993.71	$1,145,987.43	$1,145,987.43	$1,145,987.43
Maintenance and Operations	$665,782.20	$1,331,564.40	$1,331,564.40	$1,331,564.40
Total Revenue	$1,238,775.91	$2,477,551.83	$2,477,551.83	$2,477,551.83
Operating Costs (Expenses)				
Maintenance and Operations	-$530,782.20	-$1,061,564.40	-$1,061,564.40	-$1,061,564.40
M&O Labor Difference	$3,132.80	$1,440.00	$1,440.00	$1,440.00
Equipment Refresh/Replacement	$0.00	-$13,500.00	-$25,650.00	-$48,870.00
Interest Reserve	-$655,746.12	$0.00	$0.00	$0.00
Debt Service Reserve	-$572,993.71	$0.00	$0.00	$0.00
M&O Reserve	-$135,000.00	-$256,500.00	-$244,350.00	-$221,130.00
Total Expenses	-$1,891,389.23	-$1,330,124.40	-$1,330,124.40	-$1,330,124.40
Net (Revenue vs Expenses)	-$652,613.32	$1,147,427.43	$1,147,427.43	$1,147,427.43
Loan Payment				
Backbone	$0.00	$83,885.20	$83,885.20	$83,885.20
Build Out	$0.00	$1,062,102.22	$1,062,102.22	$1,062,102.22
Total Loan Payments	$0.00	$1,145,987.43	$1,145,987.43	$1,145,987.43
Net	-$652,613.32	$1,440.00	$1,440.00	$1,440.00
Cash Flow				
Capital Expenditures	-$16,393,653.00	$0.00	$0.00	$0.00
Money Borrowed	$16,393,653.00	$655,746.12	$0.00	$0.00
Net	$0.00	$655,746.12	$0.00	$0.00
Revenue	$1,238,775.91	$2,477,551.83	$2,477,551.83	$2,477,551.83
Cash Expenses	-$527,649.40	-$1,060,124.40	-$1,060,124.40	-$1,060,124.40
Loan Payments	$0.00	-$1,145,987.43	-$1,145,987.43	-$1,145,987.43
Net Cash	$711,126.51	$271,440.00	$271,440.00	$271,440.00
Accrued Interest	-$655,746.12	$0.00	$0.00	$0.00

Financing Considerations

Because project feasibility is ultimately a function of getting people to sign up and remain loyal to the network, there needs to be a value proposition that mobilizes customers to subscribe. For that to happen, subscribers need a compelling solution and the network needs to create cash flow predictability and bankable contracts to attract financing for the project. NetEquity in San Francisco visualizes these dependencies in this way:

NetEquity

NetEquity Stack

People	are hungry for	Services
Services	are hungry for	Infrastructure
Infrastructure	is hungry for	Capital
Capital	is hungry for	Cash Flow Predictability
Cash Flow Predictability	is hungry for	Bankable Contracts
Bankable Contacts	result from	Aligned Incentives
Aligned Incentives	requires	Trust
Trust	comes from	Having the Same Vision

*Isfandiyar (Asfi) Shaheen developed the **NetEquity Stack** above. Mr. Shaheen is a Global Broadband Infrastructure Thought Leader based in San Francisco. He is working to provide fiber optic connectivity to unconnected countries around the world.*

Legal Considerations

The Fairhaven legal counsel is preparing a separate analysis describing the Town's legal authority to build, own, and operate broadband infrastructure and include legal and risk-related considerations for organizing a broadband utility.

9

Risk Factors >

Likelihood

Impact

Mitigation

Risk Analysis

The following is an analysis of the main risk factors facing the Town of Fairhaven as it pursues its fiber-to-the-premise deployment. Nine Risk Factors are analyzed:

1. Subscriber Churn Risk
2. Take-Rate Risk
3. Project Execution Risk
4. Equipment and Technology Risk
5. Community Engagement Risk
6. Cost Modeling Risk
7. Timeline Risk
8. Regulatory Risk
9. Middle Mile Risk

Subscriber Churn

Subscriber Churn is the risk that customers sign up and then do not remain subscribers to the network.

Likelihood: Today customers are primarily driven by cost, speed, and customer service. Churn is possible and is a consequence of the customers pursuing an option to get better value from an alternative solution. The likelihood of churn is high if a new market solution simply replicates the incumbent model. The likelihood of churn goes down under a Business Model where 1) the customer is financially responsible for the drop to their property and 2) where the value proposition is strong enough to make the customer voluntarily committed to the network.

Impact: The impact of churn on the network is potentially catastrophic if it reaches a level where the capital and operational cost of the abandoned infrastructure cannot reasonably be shared by remaining subscribers.

Mitigation: Churn can be mitigated by implementing a business model that makes customers voluntarily committed to the network and by assigning financial responsibility to customers for their lateral connection.

Take-Rate Risk

Take-rate risk is the risk that the Town builds out the network and ends up with a take-rate that is lower than expected.

Likelihood: Take-rate risk is possible and is a function of the value proposition of the network and how well that value proposition gets communicated and managed before construction starts. High take-rates lead to lower network costs for subscribers. This creates a virtuous cycle where lower costs lead to higher take rates. The reverse is also true.

Impact: The worst-case scenario is one where lower take rates lead to higher costs and churn which create a death spiral that negatively compounds until the network is not sustainable.

Mitigation: Manage demand aggregation before construction begins and give consumers a value proposition that makes them voluntarily committed to the network infrastructure.

Project Execution Risk

Project Execution includes strategy, planning, project management and fulfillment of the project plan and operational execution.

Likelihood: Project execution failure is possible and is a function of the effectiveness of project planning, management, controls, and execution.

Impact: The severity of impact is in proportion to the effectiveness of project management and execution. A worst-case scenario is one where project execution affects the value proposition, which in turn affects take-rate and churn.

Mitigation: Hire or partner with skilled project managers and key strategic partners. Create alignment among key team members on the project plan and operational plan. Develop project controls that are monitored and reported to senior leadership monthly.

Equipment & Technology Risk

Equipment & Technology Risk includes both software and hardware solutions and is the risk that equipment failure rates are higher than expected, major software bugs are unresolved, operational reliability is lower than expected, and/or that the technology lifecycle leads to faster obsolescence than is expected. For a network, the size of Fairhaven, an additional risk is scalability risk.

Likelihood: Solutions with short deployment histories, unreliable references, unclear quality control and test procedures, weak professional teams, and poorly architected scalability abstractions present increased equipment and technology risk.

Impact: The impact of this risk category is moderate because it is possible to vet both software and hardware systems to assess this risk. The base technology of the network will be fiber optic cable and that has sufficient history to present a minor risk to the project. Remaining risks include electronics and software systems.

Mitigation: Implement thorough due diligence processes with trained professionals to scrutinize references, architecture, software abstractions, quality control systems and the professional histories of vendors being considered.

Community Engagement

Community Engagement is the marketing, education and communication processes and strategies used to inform residents and businesses about the value proposition offered by the network.

Likelihood: Community Engagement risk is possible but nonetheless a risk that can be managed and monitored. Poor planning, management and execution increases the level of risk. Community engagement can be handled by internal Town staff, but risk increases if staff member resources are inadequate for a project of this size. There is an abundant supply of marketing professionals available to assist with community engagement processes.

Impact: Community engagement is a key driver of project success due to the relationship between community engagement and take-rate.

Mitigation: Leverage the skills of competent marketing professionals and provide sufficient resources to make it easy for every resident to learn the basic value proposition for the network

in comparison to alternatives through a variety of marketing, education and communication strategies.

Cost Modeling Risk

Cost Modeling Risk is the risk that cost modeling significantly underestimates actual design, construction, and/or operational costs.

Likelihood: There is enough industry data to reasonably validate cost estimates.

Impact: Cost overruns can have a moderate to disastrous impact on network sustainability.

Mitigation: Validate financial assumptions against industry assumptions, market conditions, and account for local economic variables.

Timeline Risk

EntryPoint consulted with Comm-Tract, the construction firm that built the fiber network connecting Town assets. They indicated that they believe a Town-wide network can be constructed in less than 10 months. The benefits of building the network in an accelerated pace (less than 1 year) include the following:

1) Each phase requires legal, financing and accounting transaction costs. Building the network with fewer phases will lower the overall transaction costs for the project.
2) Building at a faster pace will result in an accelerated period to break-even.
3) Interest Rates are at an unprecedented low currently and building over an extended period may expose later project years to some interest rate risk.

Likelihood: Costs are certain to be higher for an extended buildout period. However, there may be execution risks for accelerating the buildout, depending on the experience and capacity of the construction partner, and these trade-offs need to be weighed by Town leaders.

Impact: Costs will be incrementally higher for an extended build-out schedule and M&O will have a longer ramp to sustainability.

Mitigation: The Town can control the buildout schedule following a cost / benefit analysis of the options. An important consideration is alignment with construction partners. If the Town is going to outsource construction, it should consult with potential construction partners about the alternative construction schedules to make sure that the Town's strategy is amenable to key construction partners.

Regulatory Risk

Regulatory Risk is the risk that State or Federal regulations become an impediment or barrier to the Town successfully building or operating a municipal network. The Town is waiting on a legal memo from outside counsel addressing Massachusetts State Law.

Likelihood: Historically, incumbent operators have taken legal action to stop a municipality from building a competing network.

Impact: If a claim were to be brought against Fairhaven, the likely process is that it would take an extensive amount of time and cost to contest or appeal the claim.

Mitigation: The Fairhaven Town Attorney can oversee an effort to follow the same process followed by Ammon and Mountain Home to seek and receive Judicial Confirmation that the Town has the authority to build this infrastructure.

Middle Mile Risks

Middle Mile risks include the following:

1) Lack of redundant options on divergent paths,
2) Pricing risk, and
3) The risk of being stranded or isolated without a viable path to an internet exchange point.

Likelihood: The closest internet exchange point is in Boise. Fairhaven does have a divergent middle mile path to Boise via the three Middle Mile options, but bandwidth capacity is a potential issue going forward.

The most likely risk is that incumbent middle mile carriers will not provide competitively priced, high bandwidth middle mile options.

The risk of getting isolated or cut off from internet access is possible but has a low likelihood of occurring.

Impact: Each of the Middle Mile Risks could have a significant impact on network success. The most likely risk is pricing risk followed by insufficient Middle Mile capacity. The obvious impact of pricing risk is that the per premise cost will increase.

Mitigation: The way the Town can mitigate and possibly eliminate Middle Mile Risk is by working with the County to build and operate its own Middle Mile connection back to Boise. This may seem daunting to the Town and the County, but it is worth doing a separate analysis and comparison of projected costs to proposals from existing incumbents. A significant benefit of the Town & County working together to enable a permanent path to Boise is that the infrastructure could be paid off over 30 years and would provide abundant bandwidth to County residents and businesses.

ORIGINAL

Section F. **RESPONSE CERTIFICATION**

8/31/2020
(DATE)

Purchasing Services Department

The undersigned certifies that to the best of his or her knowledge: (check one)

☑ There is no officer or employee of Gila County who has, or whose relative has, a substantial interest in any Contract award subsequent to this Response.

☐ The names of any and all public officers or employees of Gila County who have, or whose relative has, a substantial interest in any Contract award subsequent to this Response are identified by name as part of the submittal

The undersigned further certifies that their firm (check one) ☐ **IS** or ☑ **IS NOT** currently debarred, suspended, or proposed for debarment by any federal or state entity. The undersigned agrees to notify the County of any change in this status, shall one occur, until such time as an award has been made under this procurement action.

In compliance with Request for Proposals No. 071320 Master Broadband Plan Phase 2 for Gila County, and after carefully reviewing all the terms and conditions imposed therein, the undersigned agrees to furnish such services in accordance with the specifications/scope of work according to the Proposal submitted or as mutually agreed upon by subsequent negotiation.

(signed) James E. Rogers, Jr
(by)

Mission Broadband, Inc President
(firm) (title)

145 Exchange ST Ste 4 207-922-4102
(address) (phone number)
Bangor, ME 04401

mission broadband

Connecting America's Communities

Response to

Gila County, AZ

Request for Proposal (RFP) No. 071320

Master Broadband Plan Phase II

THE GREAT SEAL OF GILA COUNTY ARIZONA

1881

September 3rd, 2020

ORIGINAL

Proposal to Gila County, AZ
For Professional Broadband Consulting Services
by Mission Broadband, Inc.

Executive Summary

We are pleased to provide a response to Gila County, AZ for their Request for Proposal (RFP) for **Master Broadband Plan Phase II.**

This response is being submitted by Mission Broadband, Inc., a company within the ProInfoNet family of companies, originally founded by Jim Rogers in 1995 as independent technology consultants. Our team has provided superior consulting services to its clients across the United States for the past 24 years.

Mission Broadband was formed to focus on the needs of broadband within municipalities and counties. The combined resources and experience of our family of companies strongly qualifies Mission Broadband to be the consultant to Gila County working with them to develop the Master Broadband Plan Phase II which will define the vision of complete broadband coverage throughout the county.

Mission Broadband, Inc. is well positioned to develop the Master Broadband Plan Phase II for Gila County. Our approach will be an iterative process of collaborating with the County and project stakeholders to conduct a variety of data gathering tasks and research that will guide the process of developing the broadband plan. The project will encompass all aspects of community engagement, research, analysis and documentation to address the items outlined in the scope of work of the RFP. The network design and financial analysis portion of the plan will allow for variations in key data related to expenses and revenues. Many factors will be considered in developing the master broadband plan to include; community and stakeholder input and interest, potential take rates, variations in end user costs, revenue sharing opportunities, feasibility of leased vs. owned first/middle/last mile fiber networks, e-rate network capabilities, financial projections, outside plant facilities, rights of way, central office facilities, electronics, maintenance and repair costs, etc.

Mission Broadband is an independent consultant. We are not affiliated with any Internet Service Provider (ISP) or Telecommunications company. We remain vendor neutral and technology neutral, allowing us to work with our clients without any concern regarding conflict of interest statutes and laws within your County or State. Our team has years of industry experience performing broadband network consulting, including feasibility studies, design, engineering, competitive bidding (RFP), contract negotiation, implementation, project management and support.

We value our relationships with our clients and work diligently to deliver outstanding customer service.

Please accept this proposal on behalf of Mission Broadband, Inc. We look forward to working with Gila County, AZ on a successful project to develop the **Master Broadband Plan Phase II.**

Name: James E. Rogers
Title: President
Address: Mission Broadband, Inc.
145 Exchange Street, Suite 4
Bangor, ME 04401
Telephone: 207-922-4102
Email: jrogers@missionbroadband.com

Signature:

Overview of Proposed Process

Mission Broadband's approach will involve a deep level of engagement with the Gila County (County) team and its stakeholders. Mission Broadband will: create a project plan to include a communication strategy and a regular project meeting cadence with the County; host and conduct in-person and Zoom meetings with stakeholders and constituents; review operational structures and options for a broadband network; review potential broadband providers; evaluate footprint and technology options for broadband networks; determine and document the benefits and advantages of owning vs. leasing first/middle/last mile fiber networks; review opportunities to leverage existing e-rate networks within the county; determine the role that the Industrial Development Authority (IDA) could play in this process; review grant opportunities and develop an implementation plan based on the information and details gathered.

It is our understanding the County prefers a fiber network for service delivery. It is worth noting that Mission Broadband has the expertise to evaluate fiber-based broadband delivery as well as other technology options if necessary and will evaluate each potential vendor's capabilities to the County's desired outcome. Mission Broadband is well versed in rights of way and pole attachment agreements and will guide the County on understanding what may be required by broadband providers for the distribution of their proposed services. Mission Broadband can compare pricing models to current industry practices for the County's review as well as Service Level Agreements (SLA) to ensure appropriate customer satisfaction.

As the County's consultant, we coordinate all the dynamics of the County and project stakeholders throughout the entire project. Mission Broadband will work with the County on any or all aspects of the work outlined in our proposal and will be a valued resource complimenting your team. We have included a list of services we provide for regional broadband projects below to give a more detailed view of our capabilities and experience. Please note this is not an exhaustive list, however, it does highlight the primary areas we continue to be engaged in for municipal and regional broadband projects.

Data Gathering: (Surveys & Outreach)

- Utilize data gathering tool for tracking
- Create customer survey
- Facilitate and lead stakeholder meetings
- Determine users of network (residential, business, wholesale, utilities, anchor institutions, Internet Service Providers, etc.)
- Determine application usage and bandwidth requirements
- Determine end user cost expectations
- Determine performance requirements of a broadband network
- Determine visual and aesthetic requirements
- Analyze data collection information
- Evaluate and summarize input from stakeholders
- Evaluate and determine technology options and solutions for a broadband network that would match and meet the needs of Gila County, its customers and its stakeholders

Research and Analysis: (Includes Market Research and Potential Partnerships)

- Competitive Environment / Current Providers
  - Technology Deployed
  - Pricing Trends
  - Assets
  - Lifecycle
- Network
  - Take Rates
  - Subscriber Pricing
  - Monthly Subscriber Fee
  - Revenue Opportunities
  - Capital Expense

- Operational Expense
- Usage Models
- Risk Analysis & Recommendations
- Security Requirements

- Regulatory / Legal Process
  - Permit requirements
  - Fees & Rights of Way
  - Legal Requirements for Municipal Broadband Operation
  - Indefeasible Rights to Use (IRU's)
  - Approvals (Local, State, Federal)
- Research Partnerships; Service Providers, ISP's, Telecomm's, etc.
- Future proofing technology infrastructure

Infrastructure Mapping: (Utilizing existing resources and data where possible)

- Mission Broadband considers the following attributes be included in the inventory of vertical and underground assets. Assets include poles, underground infrastructure and all physical structures (buildings):
  - Vertical and Aerial:
    - Vertical asset location latitude (pole and structure)
    - Vertical asset location longitude (pole and structure)
    - Identify street or road or route (pole and structure)
    - Identify pole owners (joint owners)
    - Identify electric structure ID (route and pole number)
    - Identify other attaching identities structure ID (route and pole numbers)
  - Underground or buried:
    - Identify street or road or route
    - Identify (Manhole, handhole, pedestal, etc.) asset number
    - (Manhole, handhole, pedestal, etc.) underground asset location Latitude
    - (Manhole, handhole, pedestal, etc.) underground asset location Longitude
  - Develop Make Ready Estimate

Technology Overviews

- Fiber to the Premise (FTTP)
  - GPON
  - XGSPON
  - Active Ethernet
- Fixed Wireless including CBRS
- Hybrid-Fiber Coax
- Copper / DSL / Bonding
- Public Wi-Fi

High-Level Engineering and Design

- Outside Plant Infrastructure
- Central Office(s)
- Meet Points / ISP Up-streams
- Customer Premise Equipment
- Futureproofing

Feasibility Study Financial and Operational Modeling

- Finalize Proforma
  - CAPEX, OPEX, ROI, Take Rates, etc.
- Identify Risks

- Operational Models

Request for Proposal (RFP) / Bidding Process:

- Develop draft RFP's for detailed network design and construction based on the specifications gathered
- Facilitate review and finalization of the draft RFP's
- Prepare final RFP's based on input from the Gila County Team and project stakeholders
- Determine vendor rating/selection criteria
- The Mission Broadband team will support issuance of the RFP's and the team of experts will field and manage questions and answers with prospective vendors
- Expected RFP open competitive bid period will be 4 to 6 weeks per RFP
    - Extended bid response times possible if requested by respondents and agreed to by the Gila County team
- The Mission Broadband team of experts will evaluate all proposals as follows:
    - Review each vendor proposal based on the requirements and specifications in the RFP
    - Rate each vendor proposal based on the approved vendor rating/selection criteria
    - Evaluate proposed technology solutions based on the requirements and specifications in the RFP
    - Perform a comparative analysis of all vendor(s) costs
- Mission Broadband will prepare a report summarizing each vendor proposal along with a ranking based on the approved vendor rating/selection criteria
- Present the report to designated Gila County officials.

Project Management:

- Coordinate vendor(s) teams
- Develop communication strategy
- Identify project risks
- Develop tracking reports
- Set goals and milestones
- Finalize Project

Experienced Project Team

Our Mission Broadband executive team of Jim Rogers, president, Trevor Gordon, Senior Vice President, John Dougherty, Vice President & General Manager, Mike Reed, Director of External Affairs, and Mark Van Loan, Network Engineer has over 120 years of experience in the telecommunications, networking and internet/broadband fields of technology. Our team understands broadband services and the technologies utilized to deliver the desired outcome for Gila County, AZ. Along with our executives, our team of 18 professionals has worked in the telecommunications industry and their experience includes managing the design, building and maintenance of telecommunication and broadband networks. Members of the team have performed financial modeling and budgeting for these networks.

Jim Rogers, President ProInfoNet and Mission Broadband, Inc.

Jim Rogers is a true pioneer in his field. After founding ProInfoNet, an independent telecommunications and computer consulting firm, in 1995, Jim revolutionized network functions for his entire customer base.

He implemented a strategic combination of technology and best practices to benefit medium and large enterprises in New England by reducing costs and increasing both value and efficiency. ProInfoNet' s current list of more than 180 clients spans the country. Since its founding, his companies have developed and successfully negotiated over 500 technology, network and broadband RFP's. Through his RFP process, Jim's companies have successfully supported the installation of networks to over 4000 locations throughout

the United States utilizing a broad range of network technologies.

In 2007, in direct response to the Federal Communications Commission's creation of the Rural Health Care Pilot Program (RHCPP), a program designed to provide an infrastructure for rural healthcare providers to connect electronically to their urban counterparts, Jim founded the New England Telehealth Consortium (NETC).

Once established, Jim applied for NETC funding as part of the RHCCP and in an unprecedented response, the FCC awarded NETC 24.6 million dollars.

Today NETC is a non-profit member organization with more than 1,100 healthcare participants across Maine, New Hampshire, Vermont, Massachusetts, Connecticut and Rhode Island. ProInfoNet managed the initial implementation and continues as the managing agent of the multi-state network. Thanks to Jim's leadership, NETC members have saved millions of dollars in networking costs and received additional network value through the NETC membership.

Prior to founding ProInfoNet, Jim spent 15 years in the private business sector, managing information technology and telecommunications in Maine. He holds a Bachelor of Science from the University of Maine and has served as adjunct faculty at Husson University, teaching courses in Telecommunications and Information Technology.

John Dougherty – Vice President and General Manager

John Dougherty has over 30 years' experience in Telecommunications, Internet and Networking services. John was the Vice President of operations for a Maine based CLEC and responsible for the build out of their Fiber-To-The Premise to numerous communities. John has also directly project managed fiber builds, central office installations and data center designs as well as many Wide-Area Network (WAN) installations. John has a solid working knowledge of Telecommunications infrastructure as well as a solid understanding of the technologies designed to provide Internet services to residents and businesses. John is a graduate of Electrical Engineering Technology – Associates, from the University of Maine. Before joining Mission Broadband, John owned a consulting and project management company working on network solutions with companies such as Oxford Networks, NASCAR, LL Bean and various broadband companies, helping these companies design and implement a variety of technologies to include FTTP, fixed wireless and cellular solutions.

Michael Reed - Director of External Affairs

Michael Reed has over 40 years in the telecommunications industry working in the Northeast (30 years in Vermont). Prior to starting his consulting firm, he has held a number of management positions with NYNEX, TDS Telecom, FairPoint Communications and as State President for Consolidated Communications in Maine, New Hampshire, and Vermont. Mr. Reed's experience includes Network operations, Outside plant operations, large project management, community and public relations, regulatory and legislative affairs. Mr. Reed has recent experience (4-5) years with solicitations for and experience with municipal projects to expand broadband. His experience includes meetings with municipal officials, responding to RFPs, evaluating broadband expansion in regions and advising suggested solutions.

Trevor Gordon - Senior Vice President

Trevor Gordon manages operations overseeing all back-office functions that keep the companies running. Trevor boasts over 30 years in business and technology management with extensive telecommunications, marketing and sales, operations and financial management of medium to large businesses. Trevor spent many years in the management and operations of large corporations including CarMax, H.E. Murdock, Pride Golf Tee and Kmart. Trevor holds a Bachelor of Science degree in Business Administration from the University of Maine.

Mark Van Loan - Network Engineer

Mark Van Loan has held a career in technology for over 30 years, in a variety of positions including hands on technical roles, Sales Engineering and Project Management roles, and mid and senior level management in the areas of Information Technology and Telecommunications. Working in the Telecommunications

industry in New England Mark has played key roles in the areas of Network Operations, Customer Service and Technical Support and has provided oversight and management of key operational functions including Field Services, Transport, Switching, Network Engineering and Network Operations Center. Mark has an associate degree in Computer Science and is well-versed in Service Provider as well as Enterprise networking technologies, having held many industry certifications in networking prior to joining management. While at Oxford Networks and FirstLight Mark held Director and VP roles leading teams tasked with expanding and supporting fiber transport, distribution and access networks throughout New England.

Reference and Qualifications

Mission Broadband, Inc. is currently working a project for the town of New Shoreham, RI which involves creating a technology and vendor neutral, open and competitive RFP for the design and implementation of an Island Wide Broadband Network. Our team has negotiated with the local power company an Indefeasible Rights to Use (IRU) contract for multiple strands of fiber. We also helped design and implement, through our RFP process, an FTTP Network for the anchor institutions as well as negotiating with an Internet Service Provider to provide Gigabit bandwidth. A contract was also negotiated with a construction firm to build and maintain this network.

Mission Broadband is working on other broadband projects but due to non-disclosure agreements these projects are not currently available to be discussed with other clients.

Reference Project:

Client Name: town of New Shoreham/Block Island

Consultant role: Lead Consultant, Development of comprehensive RFP

(1) Contract dates: 6/2019 through Current – the RFP process is nearly completed, and the project will be moving into the vendor negotiation phase.

Project description: Create a survey and data gathering instrument to solicit feedback from the community and stakeholders in support of an Island Wide FTTP network to all 1800 structures. Facilitate public forum. Develop a comprehensive RFP to solicit the design, construction and ongoing operation of an island wide FTTP network. Also included in the RFP is the design of a scalable transport solution utilizing fiber to the mainland and connectivity to Internet Service Providers at a co-location facility in Providence, RI.

(2) Contract dates: 1/18/2018 through 2/19/2018

Project description: Determine E-Rate and Healthcare Connect Fund subsidy network design options to build private fiber for the town of New Shoreham's School, Library, Medical Center, town Hall and Public Safety facilities.

Services performed: Collect data, interview and document New Shoreham project goals, draft two network designs, draft two funding request plans, socialize the network design with FCC and USAC, determine timeline and procedures required to obtain FCC subsidies, present findings.

(3) Contract dates: 2/19/2018 through 6/9/2019

Services performed: Write and distribute RFPs for the Implementation of private fiber for the town of New Shoreham and utilization of the Healthcare Connect Fund for Broadband services at eligible sites. Sites connected to the initial fiber build include: School, Library, Medical Center, Town Hall, Public Safety. Analyze Vendor responses and provide recommendations.

Timeline met: Yes
Reference: Amy Lewis Land, Director of Finance, financedirector@new-shoreham.com, 401-466-3208
Michele Spero, Information Technology Manager, itsupport@new-shoreham.com, 401-835-0803

Reference Project:

Client Name: California Telehealth Network (CTN)

Project description: Meet CTN's goal to help a 16,000 resident unserved and underserved area (Kern Valley) in California design a broadband network.

Our project engaged the public and anchor institutions to gather initial requirements, draft the network design and RFP, manage the competitive bidding process, and perform vendor response analysis that was used to make a vendor selection.

Consultant role: Lead Consultant

Contract dates: 3/27/2015 through 4/15/2016

Services performed: Our project engaged the public and anchor institutions to gather initial requirements, draft the network design and RFP, manage the competitive bidding process, and perform vendor response analysis that was used to make a vendor selection.
Timeline met: Yes
Reference: Eric Brown, President of CTN, browne@ochin.org, 310-365-1450

Reference Project:

Client Name: Maine General Health

Project description: Network Design and RFP for large health care network

Consultant role: Lead Consultant

Contract dates: 2/2/2016 through current

Services performed: Design network, procure federal funds, draft RFPs, analyze vendor responses, assist in vendor selection, assist in contract negotiation.
Timeline met: Yes, on multiple RFP projects

Reference: Danny Burgess, CIO, dannyburgess@mainegeneral.org, 207-624-4245

Reference Project:

Client Name: New England Telehealth Consortium (NETC)

Project description: Design and implement a large 3 state health care network.

Consultant role: Lead Consultant, Contract Creation and Negotiation, Project Management

Contract dates: 11/1/2006 through Current

Services performed: Design Network, procure $25M in federal funds, draft RFPs, analyze vendor responses, Assist in Vendor Selection, Contract creation and negotiation with 8 winning vendors, project management to implement a Carrier Ethernet/Internet network for 320 non-profit health care sites throughout Maine, New Hampshire and Vermont.

Timeline met: Yes

Red Hutchinson, Vice President, red.hutchinson@gmail.com, 603-581-9111

Project Costs

Mission Broadband has the resources available to begin this project within two weeks of a contract being signed. A detailed scope of work will be agreed upon to clarify all aspects of the work to be performed. We are agreeable to a scope of work that focuses on the County's desired outcome but flexible to pick up additional duties as agreed upon by the County to be a valued resource as needed. Final price for our consulting services will require a detailed discussion on the specific scope of work to be performed.

Mission Broadband understands municipal and county budgets and timing of monies throughout the fiscal budget year cycle. Keeping this in mind, we would work with Gila County to extend payment options over a period of time which may exceed the length of the project timeframe. We are also amenable to being a portion of the monthly end user recurring charge and distributing a portion of the payment over 2 to 5 years of monthly payments.

Thank You

Thank you for your review of Mission Broadband's proposal. We appreciate your diligence in reviewing our proposal and we are available to review and clarify questions with the Gila County team as your schedule permits. As previously mentioned, Mission Broadband is an independent consultant and not affiliated with any Internet Service Provider (ISP) or Telecommunications company. From our experience working with communities, counties and political sub-divisions, Mission Broadband appreciates the social and economic impacts for Gila County to have ubiquitous high-speed broadband network access. Economic enhancement, remote work force development, tele-health and education are all benefits of a broadband network. Mission Broadband looks forward to working with Gila County on this important broadband project.

ARF-6265 **Regular Agenda Item 4. D.**

Regular BOS Meeting

Meeting Date: 10/06/2020
Submitted For: Mary Springer, Finance Director
Submitted By: Mary Springer, Finance Director
Department: Finance

Information

Request/Subject

Adopt Resolution No. 20-10-04 supporting a grant application to the Gila River Indian Community for the Hellsgate Fire District and authorizing Gila County to act as the fiscal agent and accept a gaming grant award to Hellsgate Fire District in the amount of $49,507 for critical breathing air compressor project.

Background Information

At the Board meeting on March 10, 2020, the Board approved the electronic submission of the grant application from Hellsgate Fire District (HFD) to the Gila River Indian Community in the amount of $49,507 for a critical breathing air compressor project. HFD is a small rural district covering several small residential areas within northern Gila County and has limited resources to fund the purchase of the critical breathing air compressor. HFD is made up of several adults (55+) RV parks and retirement communities. HFD also covers an area 15 miles east of Highway 260. The deadline to submit the FY2020 Grant Application to the Gila River Indian Community was April 3, 2020, at 5:00 pm. The grant application that was electronically submitted on April 3, 2020, was requesting $49,507 for a critical breathing air compressor project that will produce purified air that can be pumped into the self-contained breathing apparatus (SCBA) tanks that firefighters wear when entering into toxic air environments. Under the tribal gaming compacts, tribes with casinos contribute 1 to 8% of their gaming revenue each year to the state, cities, towns, and counties. The contribution is determined on a sliding scale based on the amount of gaming revenue. 12% is distributed by the tribe to cities, towns, and counties of their choosing for community services and public safety programs for local government. Gila County and HFD received notification on September 15, 2020, of the grant award and was requested by Gila River Indian Community to formalize the acceptance of the grant award through the Board's adoption of a resolution.

Evaluation

The HFD serves a total of 38 square miles, with the target population of nearly 20,000 local community members and over 100,000 visitors to local forests in the surrounding area. They are situated between the Town of Payson Fire Department and the Christopher-Kohls Fire Department and have automatic aid agreements with both. The critical breathing air compressor project is essential to have field-ready equipment when needed.

Conclusion

HFD has a need for funding to support its critical breathing air compressor project. HFD received notification on September 15, 2020, that the Gila River Indian Community approved its request and asks that the Board of Supervisors adopt a resolution supporting the grant award and act as the pass-through agency on behalf of the HFD.

Recommendation

Staff recommends adoption of Resolution No. 20-10-04 and acceptance of a pass-through grant on behalf of the HFD from the Gila River Indian Community in the amount of $49,507 for critical breathing air compressor project.

Suggested Motion

Information/Discussion/Action to adopt Resolution No. 20-10-04 agreeing for Gila County to be the pass-through entity on behalf of Hellsgate Fire District (District) for a grant award to the District by the Gila River Indian Community in the amount of $49,507 to be used for the District's Critical Breathing Air Compressor Project. **(Mary Springer/John Wisner)**

Attachments

Resolution No. 20-10-04

GRIC Award Notification

GRIC Application

RESOLUTION NO. 20-10-04

A RESOLUTION OF THE BOARD OF SUPERVISORS OF GILA COUNTY, ARIZONA IN SUPPORT OF A GRANT APPLICATION TO THE GILA RIVER INDIAN COMMUNITY FOR THE HELLSGATE FIRE DISTRICT AND AUTHORIZING GILA COUNTY TO ACT AS THE FISCAL AGENT AND ACCEPT FUNDING ON BEHALF OF HELLSGATE FIRE DISTRICT.

WHEREAS, the Hellsgate Fire District is a special taxing district formed in 2008 in Gila County; and,

WHEREAS, the Hellsgate Fire District has submitted an application for a grant from the Gila River Indian Community in the amount of $49,507; and,

WHEREAS, the Hellsgate Fire District is in need of this supplemental funding to support their critical breathing air compressor project for Hellsgate Fire District; and,

WHEREAS, the guidelines for the grant require proof of support and sponsorship from Gila County in the form of a duly adopted resolution of the Board of Supervisors providing that Gila County will act as a fiscal agent and accept funding on behalf of the Hellsgate Fire District;

NOW, THEREFORE, BE IT RESOLVED, that the Gila County Board of Supervisors supports and sponsors the grant application for Hellsgate Fire District per the gaming grants requirements of the Gila River Indian Community and further will act as the fiscal agent and accept funding on behalf of Hellsgate Fire District.

PASSED AND ADOPTED this 6th day of October 2020, at Globe, Gila County, Arizona.

GILA COUNTY BOARD OF SUPERVISORS

_____
Woody Cline, Chairman

Attest:

_____
Marian Sheppard, Clerk of the Board

Approved as to form:

_____
The Gila County Attorney's Office

Springer, Mary

From: Cheryl Pablo <Cheryl.Pablo@gric.nsn.us>
Sent: Tuesday, September 15, 2020 7:03 PM
To: Angela Lecher (alecher@hellsgatefire.org)
Cc: Springer, Mary; Terri M. Enos
Subject: GRIC Grant Status

CAUTION: Please VERIFY the actual email address matches sender name to avoid phishing attempts. Since this email originated from outside of Gila County, please be careful when deciding to click links or open attachments.

Hello Ms. Lecher,

Thank you for your patience as we worked through the 2020 Gila River Indian Community grant cycle. We are very much behind our normal schedule however the Grants Review Board has now completed their review of all grant proposals. The application for Hellsgate Fire District Critical Breathing Air Compressor Project is being recommended for approval in the amount of $49,507.00.

I will begin preparing the necessary documents for final approval by the Gila River Indian Community, Community Council however per policy, we do require a resolution from the City in order to acknowledge acceptance of the grant for use in the purpose identified in the grant application. Please let me know your timeline in obtaining a City Resolution. If we cannot get it rather quickly we can discuss a written acknowledgement to include in the packet until the Resolution is approved.

Congratulations on the favorable outcome! I look forward to hearing from you.

Cheryl

Cheryl Pablo

Program Administrator | Gila River Office of Special Funding | P.O. Box 2172 | Sacaton, AZ 85147 | O: 520-562-9698, ext. 259 | C: 520-610-9131 | www.gilariver.org

Gila River Indian Community Grant Application
Grant Cycle 2020

Cover Sheet

Municipality Information		
1. Date of Application: 4/3/2020 **(NOTE: Click or use up/down arrow keys to move among fields)**		
2. Name of City, Town or County: Gila County		
3. Mayor (City or Town) or Board of Supervisor's Chairman (County): ~~Tim R. Humphrey~~ Woody Cline		
4. Mailing Address: 1400 E Ash Street		
5. City: Globe	**State:** Arizona	**Zip Code:** 85501
6. Acknowledgement of Submission by Authorized Municipality Representative: **Typed Name/Title: Mary Jane Springer/Finance Director** **Email Address:** mspringer@gilacountyaz.gov		**Signature:**
Applicant Information		
7. Department/Organization Name: Hellsgate Fire District		
8. Is this a 501c non-profit Organization? ☒ **No** ☐ **Yes** **If yes, attach IRS Determination Letter**		
9. Application Contact Person: Angela Lecher **Title:** Business Manager		
10. Phone Number: 928-474-3835		
11. Mailing Address: 80 S. Walters Lane		
12. City: Star Valley	**State:** Arizona	**Zip Code:** 85541
13. Email Address: alecher@hellsgatefire.org	**Website Address:** www.hellsgatefire.org	
Project Information		
14. Project Name: Critical Breathing Air Compressor Project		
15. Purpose of Grant: Provides safe breathing air for firefighters		

16. Priority Funding Area	Public Safety
17. Annual amount requested	$49,507.00
18. Number of years that funding is requested	1
19. Total amount requested (annual amount x number of years)	$49,507.00
20. Has your organization received past funding from GRIC? If yes, list each year and amount	Yes 2018 - $48,025.00
21. Geographic area served	Town of Star Valley along with 11 unincorporated communities in Gila County. HFD is also backup to Town of Payson and neighboring communities throughout Northern Gila County.

For Office Use Only:		
Data Entry	Receipt	Evaluation
Review ☐ Approval - Amount $		☐ Denial

Gila River Indian Community Grant Application
Grant Cycle 2020

Narrative

Please structure your proposal to provide the following information in the order indicated. Provide the narrative in paragraph form in the text field provided. Please be thorough but strive for brevity.

1. Briefly describe the organization's history, mission and goals.

   Hellsgate Fire Department (HFD) was formed in February of 2008 from the merger of Diamond Star Fire Department and Tonto Village Fire Department. Our district encompasses the Town of Star Valley and 11 unincorporated communities located in Northern Gila County. It is the mission of our department to create a safer environment and to provide for an increase in quality of life for all those to enjoy. We pride ourselves in providing a wide rage of programs and services designed to protect the lives and property of the community from adverse effects of fire, medical emergencies or exposure to dangerous conditions created by either man or nature. It is the utmost goal of the department to do this effectively and efficiently by providing quality trained personnel with the tools to do their job to the best of their ability.

2. If the applying organization is non-municipal or a non-profit 501c, please describe your relationship with Arizona municipalities including past and present support, whether through partnerships, collaborations, in-kind contributions, grants, tax-based funding or other. Describe the supporting municipality's role in this project. If the applying organization is a municipality governmental sub-division please enter the text "Not applicable."

   Not applicable

3. Describe the proposed project and your plan to implement.

   The Critical Breathing Air Compressor Project will ensure quality breathing air for our first responders for the next two decades. This project provides for a state-of-the-art breathing air compressor that will purifiy room air and compress it to 5000 pounds pressure per square inch and store it in metal cylinders. It will then be transferred into the Self Contained Breathing Apparatus (SCBA) tanks that our first responders wear on their backs in dangerous toxic environments. The fire service is now recognizing that first responders are suffering from an increase in respiratory illnesses and cancers due to the toxic environments they often work in. Hellsgate FD recognizes that we must ensure that we have a proper breathing air compressor available at all times for our first responders to fill breathing tanks from. This project will ensure safe breathing air.
   If selected for this grant, Hellsgate Fire District (HFD) will quickly be able to implement the project by purchasing the compressor and associated equipment from a supplier here in Arizona. Once the equipment is delivered, the supplier will install the system in our station and train our personnel on proper use and

maintenance. All HFD first responders are already trained to fill and use the SCBA breathing devices as part of their normal duties. They just need a safe and reliable compressor system so they can continue to meet their mission objectives moving into the future.

4. Describe how the proposed project satisfies one or more of the priority funding areas identified by the Gila River Indian Community.

This project satisfies the Public Safety funding priority by directly enhancing the efforts of the Hellsgate fire department and surrounding fire departments.

5. Identify the needs/problems to be addressed, target population and number of people to be served by the project.

Hellsgate Fire District despirately needs a modern state-of-the-art breathing air compressor system for our first responders. Our current system is failing to meet standards and Hellsgate Fire District does not collect enough tax revenues to pay all of our firefighter salaries. We are forced to make up the difference fighting wildland fires and billing the State for those services. This is unreliable and often leaves us short and unable to purchase such costly but vitally important equipment.

Our district is a total of 38 square miles of rural Arizona. There are approximately 4,600 permanent residents that we serve on a 1st served basis with another 1,400 seasonal residents. HFD has automatic aid agreements with Payson Fire and Christopher-Khol's Fire Department. The Town of Payson has approximately 15,000 residents alone. All the communities in the surrounding area swell during the summer months and can sometimes reach triple the number of full time residents. This trend is increasing as more people drive to the mountains to escape the high temperatures of Southern parts of Arizona. All surrounding areas rely on our personnel to assist with all fire assignments and run EMS services during peak times. All of these residents could potentially benefit from this equipment as we respond to all areas.

6. Define the project as a new or continuing program. Has GRIC previously funded this project?

This is a new project to address an immediate need.
GRIC has not funded or been asked to fund this project before.

7. Provide a brief timeline including start and finish dates. Indicate if the timeline is flexible.

Project timeline:

1-30 days.....Purchase project equipment.

30-60 days.....Install equipment, complete training, go operational.

60-90 days.....complete and file all grant expenditure documents with GRIC and Gila County.

8. Identify other organizations, partners or funders participating in the project and their roles.

None....this is a Hellsgate Fire District project only. (This equipment, like all HFD equipment is made available to our regional partners for use as needed through mutual and automatic aid agreements.)

9. Would you be able to implement the proposed plan if your organization received partial funding for this project?

Not at this time.

10. Describe your plan for project financial sustainability beyond the grant period. If this is a program/project previously funded by the Gila River Indian Community describe efforts made towards the previously described sustainability plan.

HFD has committed to provide annual testing, calibration, maintenance and recertification services for the breathing air compressor and all associated equipment. The annual upkeep costs are estimated to be $600.00. HFD will pay for the required hydrostatic of all steel cylinders every five years, estimated cost of $300.00. We are also dedicating funds each year to our capital equipment to start a replacement program for respiratory equipment to take place no more than every 10 years. However, it should be noted that this capital equipment has a life expectancy of 20 years, provided technology or OSHA requirements do not render it obsolete before that.

11. Describe your plan to document progress and results.

Hellsgate Fire District is determined to ensure every first responder has safe breathable air in an emergency. HFD will send air samples to a third-party laboratory every 90 days to ensure the breathing air meets Occupational Safety and Health Association (OSHA) and National Fire Protection Association (NFPA) safety standards. These test results will be maintained by both the Hellsgate Fire District as well as the laboratory.

The test results will also be posted in the fire stations for first responder employees who have a right-to-know the air they are breathing is safe.

12. Indicate any application to and/or awards made by a tribe other than the Gila River Indian Community for state shared revenues for this and any other project for the past five (5) years. If this information is included in a separate attachment, please indicate that here.

    2019 Ak-Chin Indian Community – Remote Rescue UTV Project – Awarded $23,641

    2019 Ft. McDowell Indian Community – Breathing Air Compressor – NOT AWARDED

    2019 Tonto Apache Indian Community – Critical Hose Program – Awarded $25,500

Gila River Indian Community Grant Application
Grant Cycle 2020

Project Budget

Budget Period: July 2020-June 2021

For each budget item listed here please provide a narrative description on the following Project Budget Detail page.

Proposed Budget Expense (list each budget item)	Amount requested from GRIC	Amount requested or secured from other sources	In Kind contributions	Total Budget
1. Breathing Air Compressor	$ 18,403.57	$0	$0	$ 18,403.57
2. Carbon Monoxide Monitor	$ 3,057.14	$0	$0	$ 3,057.14
3. Filing Station	$ 14,091.96	$0	$0	$ 14,091.96
4. Cylinders	$ 4,826.68	$0	$0	$ 4,826.68
5. Cylinder Rack	$ 855.00	$0	$0	$ 855.00
6. Cylinder Nut/Nipple	$ 97.52	$0	$0	$ 97.52
7. DOT Lable/Placards/Tags	$63.33	$0	$0	$63.33
8. Hoses and Fittings	$377.11	$0	$0	$377.11
9. Installation and Training	$1,100.00	$0	$0	$1,100.00
10. Freight Handling and Liftgate	$3,000.00	$0	$0	$3,000.00
11. Sales Tax	$3,634.69	$0	$0	$3,634.69
12. Initial Laboratory Tests	$0	$0	$125.00	$125.00
13. First Quarterly Lab Test	$0	$0	$125.00	$125.00
14. Click here to enter text.	$0	$0	$0	$0
15. Click here to enter text.	$0	$0	$0	$0
Total Budget	$49,507.00	$0	$0	$49,757.00

Gila River Indian Community Grant Application
Grant Cycle 2020

Project Budget Detail

Please provide a narrative description for each of the project budget items listed on the previous page. Include the dollar figure and how it was derived.

1. Breathing Air Compressor: This is the compressor that will collect, purify and compress room air into high pressure breathing air. LEGACY 13 Vertecon Breathing Air Compressor * 13 scfm, 4 STG, 6,000 psig service * 10 hp | 230 volt/1-phase * Automatic drain system * P2 SECURUS Grade E purification, 67,000 ft3 processed * Interstage pressure gauges. Cost: $18,403.57 (Derived from sales quote, attached.)

2. Carbon Monoxide Monitor: This electronic device is now required on all breathing air systems to alarm if carbon monoxide is in present in the air. Electronic CO Monitor Kit - Field Install only (includes Calibration Gas) Cost: $3,057.14 (Derived from sales quote, attached.)

3. Filling Station: This device is where breathing cylinders are placed during filling and is designed to protect individuals from accidental explosion during filling. Fill Station, 2 Position CFS5.5-2S standard scope of supply and including the following additions: Dual function, top mount, four bank cascade panel. The dual function feature offers the ability to refill a storage bank, even with the bank valve closed, while filling SCBA's from another bank. The system also include an air direction valve allowing the operator to select "filling from storage" or "filling direct from the compressor." Additionally the scope includes a remote fill hose connection including bulkhead fitting, adjustable regulator for up to 6000 psig service, gauge, isolation valve, and quick onnect/disconnect. Cost: $14,091.96 (Derived from quote, attached.)

4. Cylinders: There are four which hold the high pressure air that is waiting to be filled into the SCBAs. Cylinder,ISO,6000,510CF,w/702 Valve. Cost: $4,826.68 (Derived from quote, attached.)

5. Cylinder Rack: This rack holds the very heavy high pressure cylinders securely in place so they do not fall over and cause damage or injury. Cost: $855.00 (Derived from quote, attached.)

6. Cylinder Nut/Nipple: This solid brass device is attached to each cylinder. Cost: $97.52(Derived from quote, attached.)

7. DOT Lable/Placards/Tags: These items are required for safety reasons on this type of equipment. Cost: $63.33 (Derived from quote, attached.)

8. Hoses and Fittings: These are the various hoses and fittings that attach all of the components together and allow the high pressure air to be distributed to the cyliners and filling station. Cost: $377.11 (Derived from quote, attached.)

9. Installation and training: This breathing air compressor system is a highly complicated and must be installed by a professional trained to do so. While our first responders are familiar with filling SCBA cylinders, the manufacturer will train our personnel in how to use this specific system safely. Cost: $1,100.00 (Derived from quote, attached.)

10. Freight Handling and Liftgate: These charges will cover the costs for packaging, shipping and delivery of this very heavy equipment to our station. Cost: $3,000.00 (Derived from quote, attached.)

11. Sales Tax: Unfortunately the State of Arizona requires fire districts to pay sales taxes. Cost: $3,634.69 (Derived from quote, attached.)

12. Initial Laboratory Test: An independent laboratory must test the air produced by the compressor before our first responders can breath it. Hellsgate's Cost: $125.00 (Derived from laboratory pricing.)

13. First Quarter Laboratory Test: The air from the compressor must be tested every 90 days, this falls within the grant budget cycle. Afterwords, Hellsgate FD will cover all testing and other upkeep costs ($600.00 annually) through our budget process. Hellsgate's Cost: $125.00 (Derived from laboratory pricing.)

14. Click here to enter text.

15. Click here to enter text.

Other explanation: Please see attached vendor quote. Hellsgate FD agrees to maintain this equipment to the highest standards if awarded and will be responsible for the estimated $600.00 annual costs. Our sincerest and respectful thanks for the opportunity to be considered for this great gift.

UNITED FIRE
Life Safety is Serious Work®

www.unitedfire.net
800.362.0150
335 N. Fourth Avenue, Tucson, AZ 85705

Quote UFEQ29609

Valid through May 1, 2020

Prepared For:
Hellsgate Fire Department
John Wisner
Phone: (928)474-3835 xSta
80 S. Walters Ln.
Star Valley, AZ 85541
jwisner@hellsgatefire.org

Prepared By:
Jeff Gilbert
Sr. Equip. Specialist
Phone: 520-306-1913
Fax: 800-882-3991
Email: jeffg@ufec.com

Jeff Gilbert

Below is the interactive version of the quote, you can choose options and see the quote totals.

For the full presentation proposal, click here to view or download the PDF version of this quote. You can sign and fax this in, or you can save time by simply electronically accepting this quote below.

Line Item Detail

QTY	Description	Picture	Unit Price	Ext Price
13 cfm 10 hp - Verticon 6000 psi Compressor				
1	LEGACY 13 Vertecon Breathing Air Compressor * 13 scfm, 4 STG, 6,000 psig service * 10 hp | 230 volt/1-phase * Automatic drain system * P2 SECURUS Grade E purification, 67,000 ft3 processed * Interstage pressure gauges		$18,403.57	$18,403.57
1	Electronic CO Monitor Kit - Field Install only (includes Calibration Gas)		$3,057.14	$3,057.14
2 Position Fill Station				
1	Fill Station, 2 Position CFS5.5-2S standard scope of supply and including the following additions: Dual function, top mount, four bank cascade panel. The dual function feature offers the ability to refill a storage bank, even with the bank valve closed, while filling SCBA's from another bank. The system also include an air direction valve allowing the operator to select "filling from storage" or "filling direct from the compressor." Additionally the scope includes a remote fill hose connection including bulkhead fitting, adjustable regulator for up to 6000 psig service, gauge, isolation valve, and quick onnect/disconnect.		$14,091.96	$14,091.96
6000 PSI Storage Cylinders, Rack & Hoses				
4	Cylinder,ISO,6000,510CF,w/702 Valve (Rack NOT Included)		$1,206.67	$4,826.68
4	Nut/Nipple,7500PSI,CGA702,BR		$24.38	$97.52
1	Rack, Vert Lite Wt, 4 cyl (Bottles Sold Seperatly)		$855.00	$855.00
4	Label, DOT Breathing		$2.51	$10.04
1	Placard, Cylinder Retest NFPA		$48.29	$48.29

1	Tag, Placard Retest Orange		$5.00	$5.00
6	Elbow,90 Deg,1/4 NPTM X 1/4 JIC		$3.96	$23.76
50	Hose, 6000, PSI		$5.11	$255.50
5	Hose, End, NPT, Male		$7.15	$35.75
5	Hose, End, JIC, FM		$7.15	$35.75
5	Elbow,90 deg,1/4 JIC M X F NPT		$5.27	$26.35

Installation & Training

1	Compressor Installation & Training Set up and First start of the Compressor Hook up and install lines from compressor to the fill station Hook up of two additional Bottles to the existing cascade system. Training of personnel as designated by the Chief. To be trained on the day of the start up.	$1,100.00	$1,100.00
1	Freight & Handling - Estimated - Liftgate for the Compressor & Fill Station	$3,000.00	$3,000.00

NOTES

[NOTE A:] Customer Responsibilities:

1) Removal of the compressor from freight delivery vehicle
2) Placement of Equipment (The unit does not need to be bolted or permantly mounted to the floor)
3) Proper Electrical hook up, (by certified electrician), to compressor before start up. It is preferred to have the final conection to the compressor coordinated at the time the compressor is placed into service by the Bauer techinician.
4) The unit must NOT be started prior to the installion process. Prior start-up not performed by a certified Bauer techician & inspection will result in voiding the warranty.

[NOTE B:] Electric Requirements / Specs

Voltages and Frequencies requirements must be specified at the time an order is placed. If you have specific requirements they must be confirmed with Bauer prior to the order being place.

The unit(s) being proposed is:
"E1" = Single phase electric, 230 VAC/60 Hz

Freight - Shipping/Handling > 6-8 weeks

Freight Is ESTIMATED - Firm pricing will be provided once selection is made on items. If Hydraulic Lift Gate is required additional charges will apply.

Please note on PO any special requests.

Update

SubTotal:	**$45,872.31**
Shipping:	**$0.00**
Sales Tax:	**$3,634.19**
Total:	**$49,506.50**

Payment Options

Purchase (Terms)
Terms
$49,506.50
full payment

Purchase (Credit Card)
Credit Card
$49,506.50
full payment

Ready to Accept?

Order Confirmation

We reserve the right to cancel orders arising from errors, inaccuracies, or omissions.

☐ I agree to the terms and conditions of the above document and PDF attachment with an electronic signature below.

IP Address 63.226.59.186

PO Number

(Optional: Enter PO Number as your reference only.)

Comments

Email Address jwisner@hellsgatefire.org

Printed Name

Signature

Click to Accept

Have Questions?

Not Ready To Accept? Have Questions?

Submit

(Note, you will receive a copy of your message by email.)

John Wisner said April 1, 2020 @ 12:00 pm

Thank you for the quote Jeff. I will use it to complete my grant application. Notifications for this grant start going out July 31 and funding is mid October 2020. Feel free to call on us then. Otherwise, I will see you in Glendale in July and maybe at FRI Phoenix. Stop by anytime.

John Wisner

Time expressed in US Mountain Standard Time UTC-07:00

To see more products visit www.unitedfire.net

ARF-6266 **Regular Agenda Item 4. E.**

Regular BOS Meeting

Meeting Date:	10/06/2020		
Submitted For:	Steve Sanders, Director		
Submitted By:	Betty Hurst, Contracts Administrator		
Department:	Finance		
Fiscal Year:	2021	Budgeted?:	Yes
Contract Dates Begin & End:	11-01-20 to 10-31-21	Grant?:	No
Matching Requirement?:	No	Fund?:	Replacement

Information

Request/Subject

Request for renewal of the contract with Agile Access Control, Inc., Fleet Commander under Sourcewell Cooperative contract number 022217-AAC.

Background Information

General Services currently tracks the maintenance and fuel consumption of approximately 640 pieces of equipment and vehicles. Of that number, approximately 350 are sedans, trucks and vans. The tracking of maintenance, fuel consumption, mileage is a daily task. General Services has eliminated a few older programs and combined the majority of activities into one.

The GPS systems were removed from the software in the previous 2019 renewal. We are relying on fuel purchases at Gila County depots to capture mileages along with scheduled maintenance intervals. The maintenance must now be timed by monthly schedules and thirty-day old mileage data rather than relying on current mileage data. The mileage data is updated monthly when fuel billing occurs or when a vehicle obtains maintenance or repair. This may not be ideal for many of the higher utilization vehicles as they regularly accumulate enough miles to require service every 30 days or less or those that accrue high mileage intermittently due to the nature of their utilization. This is a shortfall of data as a result of GPS data elimination. When utilized with emailed monthly maintenance reminders, GPS would provide real-time mileage data reducing but not eliminating excessive mileage between services. It is still the responsibility of the issued vehicle operator or entity to schedule

vehicle services and presents a vehicle in a timely manner.

Evaluation

General Services has been able to build comprehensive reports with the Agile Fleet program, FleetCommander, on the latest vehicle usage and maintenance costs.

The utilization of the kiosk system for the motor pool has not been a true test this year due to COVID-19 which has curtailed a lot of travel. Although the Motor Pool usage has dramatically declined due to COVID-19 the Agile Kiosk System has proven to be more accurate and efficient than prior methods of tracking Motor Pool Utilization while freeing up staff to complete other tasks. Two kiosk systems are in place in Globe and one is planned in the new Payson complex when it is built. Sharing will save money for those Departments that don't require special equipment on the vehicles to do their work.

Conclusion

FleetCommander software has helped General Services gather the true data of our fleet use and will assist us in reducing our fleet and maintenance costs. The data shows all of the vehicles not being used to their full potential and how, with a little planning, the sharing of newer vehicles will become the way to do business.

Recommendation

It is the recommendation of the Public Works Director and the General Services Division Manager that the Board approve the continued use of the Agile Access Control, Inc., FleetCommander software program, and obtaining a discount under the Sourcewell cooperative contract for another year.

Suggested Motion

Information/Discussion/Action to approve the continued use of Sourcewell Cooperative Purchasing Agreement No. 022217-AAC on a Customer Purchase Agreement in the amount of $48,013.54 between Gila County and Agile Access Control, Inc. for an additional year, November 1, 2020 to October 31, 2021. **(Steve Sanders)**

Attachments

Renewal Contract Sourcewell No. 022217-Agile Access Control

Contract Renewal Sourcewell No. 022217-AAC

Contract NJPA 051613-AAC with Agile Access Control, Inc.

RENEWAL TO CONTRACT AGREEMENT

Contract Name: **Fleet Management and Related Technology Solutions** **Contract No.:** **Sourcewell 022217-AAC**

Statement of Purpose and Need (3-5 Sentences) This renewal will serve to extend the term of the contract from November 1, 2020 to October 31, 2021. Gila County wishes to utilize the Sourcewell Cooperative contract for Agile Access Control, Inc. Fleet Commander software program for County vehicles and equipment. All Documents executed by Sourcewell on Contract No. 022217-AAC, apply to this procurement between Gila County and Agile Access Control, Inc.

Cancellation of County Contracts:
This contract is subject to the cancellation provisions of A.R.S. §38-511.

Immigration Clause:
Contractor hereby warrants its compliance with all federal immigration laws and regulations that relate to its employees and A.R.S. § 23-214(A). If Contractor uses any subcontractors in performance of this contract, subcontractors shall warrant their compliance with all federal immigration laws and regulations that relate to their employees and A.R.S. § 23-214(A). A breach of this warranty shall be deemed a material breach of the contract subject to penalties up to and including termination of this contract. Gila County retains the legal right to inspect the papers of Contractor and its subcontractors who work on the contract to ensure that it or its subcontractors are complying with this warranty.

INDEMNIFICATION: Contractor shall indemnify, defend, save and hold harmless the County of Gila and its officers, officials, agents, and employees (hereinafter referred to as "Indemnitee") from and against any and all claims, actions, liabilities, damages, losses, or expenses (including court costs, attorneys' fees, and costs of claim processing, investigation and litigation) (hereinafter referred to as "Claims") for bodily injury or personal injury (including death), or loss or damage to tangible or intangible property caused, or alleged to be caused, in whole or in part, by the negligent or willful acts or omissions of Contractor or any of its owners, officers, directors, agents, employees or subcontractors. This indemnity includes any claim or amount arising out of or recovered under the Workers' Compensation Law or arising out of the failure of such contractor to conform to any federal, state or local law, statute, ordinance, rule, regulation or court decree. It is the specific intention of the parties that the Indemnitee shall, in all instances, except for Claims arising solely from the negligent or willful acts or omissions of the Indemnitee, be indemnified by Contractor from and against any and all claims. It is agreed that Contractor will be responsible for primary loss investigation, defense and judgment costs where this indemnification is applicable. In consideration of the award of this contract, the Contractor agrees to waive all rights of subrogation against the County, its officers, officials, agents and employees for losses arising from the work performed by the Contractor for the County.

Israel Boycott Certification: Contractor hereby certifies that it is not currently engaged in and will not, for the duration of this agreement, engage in a boycott of Israel as defined by A.R.S. § 35-393.01. Violation of this certification by Contractor may result in action by County up to and including termination of this agreement.

Contract End Date: **May 22, 2022** **Renewal Option:** ☒ **Yes** ☐ **No**

Maximum Dollar Limit: **$ 48,013.54**

Contract Information

Firm Name: **Agile Access Control, Inc.** **Contact Person:** **Ed Smith/President (Glenn Thomson)**

Address: **14101 Willard Rd., Suite A** **Phone No:** **408-213-9555 ext. 533**

City: **Chantilly** **State:** **VA 20151** **Fax:** **703-832-8729** **Email:** **gthomson@agilefleet.com**

Special Notes:
Gila County is part of the Sourcewell Cooperative, for cooperative purchasing. By using the Sourcewell contract with Agile Access Control, Fleet Commander, it will save the county in both time and money for a rate that has already been established in the Sourcewell bidding process.

Authorization to use a Cooperative Purchasing Agreement with the Sourcewell Cooperative, Contract No. 022217-AAC, for Fleet Management and Related Technology Solutions- approved this _____day of _____, 2020.

GILA COUNTY BOARD OF SUPERVISORS

_____
Woody Cline, Chairman, Board of Supervisors

ATTEST

_____

Marian Sheppard, Clerk of the Board

APPROVED AS TO FORM

_____
The Gila County Attorney's Office

RENEWAL TO CONTRACT AGREEMENT

Contract Name: Fleet Management and Related Technology Solutions **Contract No.:** Sourcewell 022217-AAC

Statement of Purpose and Need (3-5 Sentences) This revised renewal will serve to extend the term of the contract from November 1, 2019 to October 31, 2020. Gila County wishes to utilize the Sourcewell Cooperative contract for Agile Access Control, Inc. Fleet Commander software program for County vehicles and equipment. All Documents executed by Sourcewell on Contract No. 022217-AAC, apply to this procurement between Gila County and Agile Access Control, Inc.

Cancellation of County Contracts:
This contract is subject to the cancellation provisions of A.R.S. §38-511.

Immigration Clause:
Contractor hereby warrants its compliance with all federal immigration laws and regulations that relate to its employees and A.R.S. § 23-214(A). If Contractor uses any subcontractors in performance of this contract, subcontractors shall warrant their compliance with all federal immigration laws and regulations that relate to their employees and A.R.S. § 23-214(A). A breach of this warranty shall be deemed a material breach of the contract subject to penalties up to and including termination of this contract. Gila County retains the legal right to inspect the papers of Contractor and its subcontractors who work on the contract to ensure that it or its subcontractors are complying with this warranty.

Israel Boycott Certification: Contractor hereby certifies that it is not currently engaged in and will not, for the duration of this agreement, engage in a boycott of Israel as defined by A.R.S. § 35-393.01. Violation of this certification by Contractor may result in action by County up to and including termination of this agreement.

Contract End Date: May 22, 2022 **Renewal Option:** ☒ Yes ☐ No

Maximum Dollar Limit: $ 46,625.10

Contract Information

Firm Name: Agile Access Control, Inc. **Contact Person:** Ed Smith/President (Glenn Thomson)

Address: 14101 Willard Rd., Suite A **Phone No:** 408-213-9555 ext. 533

City: Chantilly **State:** VA 20151 **Fax:** 703-832-8729 **Email:** gthomson@agilefleet.com

Special Notes:
Gila County is part of the Sourcewell Cooperative, for cooperative purchasing. By using the Sourcewell contract with Agile Access Control, Fleet Commander, it will save the county in both time and money for a rate that has already been established in the Sourcewell bidding process.

Authorization to use a Cooperative Purchasing Agreement with the National Joint Powers Alliance Cooperative, Contract No. 0022217-AAC, for Fleet Management and Related Technology Solutions- approved this 19th day of November, 2019.

GILA COUNTY BOARD OF SUPERVISORS

Woody Cline, Chairman, Board of Supervisors

ATTEST

Marian Sheppard, Clerk of the Board

APPROVED AS TO FORM

Jefferson Dalton, for Charles Ahrle

The Gila County Attorney's Office

CONTRACT AGREEMENT FORM

Contract Name: Fleet Management and Related Technology Solutions **Contract No.:** NJPA 051613-AAC

Statement of Purpose and Need (3-5 Sentences) Gila County wishes to utilize the NJPA Cooperative contract for Agile Access Control, Inc. Fleet Commander software program for County vehicles and equipment. All Documents executed by NJPA on Contract No. 051613-AAC, apply to this procurement between Gila County and Agile Access Control, Inc.

Contract End Date: May 22, 2022

Renewal Option: ☐ Yes ☒ No

Maximum Dollar Limit: $ 512,871.00

Contract Information

Firm Name: Agile Access Control, Inc.

Contact Person: Ed Smith/President (Glenn Thomson)

Address: 14101 Willard Rd., Suite A

Phone No: 408-213-9555 xt 533

City: Chantilly **State:** VA 20151 **Fax:** 703-832-8729 **Email:** gthomson@agilefleet.com

Special Notes:
Gila County is part of the National Joint Powers Alliance Cooperative – NJPA, for cooperative purchasing. By using the NJPA contract with Agile Access Control, Fleet Commander , it will save the county in both time and money for a rate that has already been established in the NJPA bidding process.

Authorization to use a Cooperative Purchasing Agreement with the National Joint Powers Alliance Cooperative, Contract No. 051613-AAC, for Fleet Management and Related Technology Solutions- approved this 6th **day of** June**, 2017.**

GILA COUNTY BOARD OF SUPERVISORS

Tommie C. Martin, Chairman, Board of Supervisors

ATTEST

Marian Sheppard, Clerk of the Board

APPROVED AS TO FORM

Jefferson R, Dalton,
Deputy Gila County Attorney, Civil Bureau Chief
for Bradley D. Beauchamp, County Attorney

Agile Access Control, Inc. (FleetCommander) QUOTE

5 year long term contract pricing

14101 Willard Rd; Suite A
Chantilly, VA 20151

P: (408) 213-9555 X 533
F: (703) 832-8729

gthomson@agilefleet.com
www.AgileFleet.com

Bill To:
Gila County
745 N. Rose Mofford
Globe, AZ 85501

Phone: (928) 402-8521
Fax:
Email: scoons@gilacountyaz.gov

Quote # 20170322(a)
Date: 03/22/2017

AGILE FLEETCOMMANDER
WEB-BASED FLEET & MOTOR POOL SOFTWARE

Item #	Description	Qty	Unit Price	Extended Price
1	FleetCommander SaaS License (up to 639 vehicles) including:	(ARC)		$ 52,938
	Motorpool Module (up to 26 vehicles)			
	Assigned Vehicle Module (up to 613 vehicles)			
	Maintenance Module (up to 639 vehicles)			
	Fuel Module (up to 368 vehicles)			
	Vehicle & User Module			
	Keycontrol Software			
	Hosting			
	Support & Upgrades			
2	Professional Services	(NRC)		$ 7,995
	Training (up to 10 Admin staff)		$ 1,560	
	Setup		$ 2,340	
	Implementation		$ 2,145	
	Data Imports		$ 1,950	
3	16 Key - Key box to include	(NRC)		
	Key box	2	$ 6,554	$ 13,108
	Indoor Kiosk	2	$ 3,103	$ 6,206
	Shipping	2	$ 400	$ 800
4	Kiosk & Key box Warranty	(ARC)		
	*2nd year and beyond	2	$ 2,897.10	
4	222 GPS devices to include:	(NRC)	$200 each	$ 44,400
	Installation (centralized)		$95 each	$ 21,090
5	Annual Communication fees	(ARC)		
	Standard service w/mapping (up to 1 login)	26	$19.95/mo each	$ 6,224
	Mileage only	196	$9.50/mo each	$ 22,344

Quote is good until 7/10/2017	Gross First Year Pricing	$ 175,105
	NJPA Discount	$ 8,318
**If more vehicles are added to the motorpool	Net First Year Pricing	$ 166,788
additional licenses will need to be generated and purchased	Year 2 w/ NJPA Discount	$ 82,723
	Year 3 w/ NJPA Discount	$ 85,205
(ARC) ANNUAL RECURRING CHARGE	Year 4 w/ NJPA Discount	$ 87,761
(NRC) NON RECURRING CHARGE	Year 5 w/ NJPA Discount	$ 90,394

Signature _____ **Date** _____

National Joint Powers Alliance® (herein NJPA)

REQUEST FOR PROPOSAL (herein RFP)

for the procurement of

FLEET MANAGEMENT AND RELATED TECHNOLOGY SOLUTIONS

RFP Opening
May 16, 2013
8:00 A.M. Central Time
At the offices of the
National Joint Powers Alliance®
202 12th Street Northeast, Staples, MN 56479

RFP #051613
CORRECTED

The National Joint Powers Alliance® (NJPA), on behalf of NJPA and its current and potential Member agencies to include all Government, Higher Education, K12 Education, Non-Profit, and all other Public Agencies located nationally in all fifty states and potentially internationally, issues this Request For Proposal (RFP) to result in a national contract solution for the procurement of FLEET MANAGEMENT AND RELATED TECHNOLOGY SOLUTIONS. Details of this RFP are available beginning April 4, 2013 and continuing until May 9, 2013. Details may be obtained by letter of request to Gregg Meierhofer, NJPA, 202 12th Street Northeast, P.O. Box 219, Staples, MN 56479, or by e-mail at RFP@njpacoop.org. Proposals will be received until May 15, 2013 at 4:30 p.m. Central Time at the above address and opened May 16, 2013 at 8:00 A.M. Central Time.

RFP Timeline

April 4, 2013	*Publication of RFP in the print and online Minneapolis Star Tribune, in the print and online Daily Journal of Commerce within the State of Oregon, the NJPA website, and on the website of noticetobidders.com*
April 25, 2013 *10:00 A.M. Central Time*	*Pre-Proposal Conference (webcast – conference call - Connection info sent to all inquirers two business days prior to the event)*
May 9, 2013	*Deadline for RFP requests and questions.*
May 15, 2013 *4:30 P.M. Central Time*	*Deadline for Submission of Proposals*
May 16, 2013 *8:00 A.M. Central Time*	*Public Opening of Proposals*

Direct questions regarding this RFP to:
Gregg Meierhofer at gregg.meierhofer@njpacoop.org or (218)894-1930

Methods and guidelines for submitting questions are detailed within the body of this document.

TABLE OF CONTENTS

1. INTRODUCTION
   - A. About NJPA
   - B. Joint Exercise of Powers Laws
   - C. Why Respond to a National Cooperative Procurement Contract
   - D. The Intent of This RFP
   - E. Scope of This RFP
   - F. Expectations for Equipment/Products and Services Being Proposed
   - G. Solutions Based Solicitation
   - H. Inquiry Period
   - I. Pre-Proposal Conference
2. DEFINITIONS
   - A. Proposer – Vendor
   - B. Contract
   - C. Time
   - D. Proposer's Response
   - E. Currency
   - F. FOB
3. INSTRUCTIONS FOR PREPARING YOUR PROPOSAL
   - A. Pre-Proposal Conference
   - B. Identification of Key Personnel
   - C. Proposer's Exceptions to Terms and Conditions
   - D. Formal Instructions to Proposers
   - E. Questions and Answers About This RFP
   - F. Modification or Withdrawal of a Submitted Proposal
   - G. Value Added Attributes, Products/Services
   - H. Certificate of Insurance
   - I. Order Process and/or Funds Flow
   - J. Administrative Fees
4. PRICING STRATEGIES
   - A. Line-Item Pricing
   - B. Percentage Discount From Catalog or Category
   - C. Hot List Pricing
   - D. Ceiling Price
   - E. Volume Price Discounts
   - F. Sourced Product/Equipment /Open Market Items
   - G. Cost Plus a Percentage of Cost
   - H. Total Cost of Acquisition
   - I. Requesting Product and Service Additions/Deletions
   - J. Requesting Pricing Changes
   - K. Price and Product Changes Format
   - L. Single Statement of Pricing – Historical Record of Pricing
   - M. Payment Terms
   - N. Sales Tax
   - O. Shipping and Shipping Program
   - P. Normal Working Hours
5. MARKETING PLAN
6. PROPOSAL OPENING PROCEDURE
7. EVALUATION OF PROPOSALS
   - A. Proposal Evaluation Process
   - B. Proposer Responsiveness
   - C. Proposal Evaluation Criteria
   - D. Other Consideration
   - E. Cost Comparison
   - F. Product Testing
   - G. Past Performance Information
   - H. Waiver of Formalities
8. POST AWARD OPERATING ISSUES
   - A. Subsequent Agreements
   - B. NJPA Member Sign-up Procedure
   - C. Reporting of Sale Activity
   - D. Audits
   - E. Hub Partner
   - F. Trade-Ins
   - G. Out of Stock Notification
   - H. Termination of a Contract resulting from this RFP
9. GENERAL TERMS AND CONDIITONS
   - A. Advertisement of RFP
   - B. Advertising a Contract Resulting From This RFP
   - C. Applicable Law
   - D. Assignment of Contract
   - E. List of Proposers
   - F. Captions, Headings, and Illustrations
   - G. Data Practices
   - H. Entire Agreement
   - I. Force Majeure
   - J. Gratuities
   - K. Hazardous Substances
   - L. Legal Remedies
   - M. Licenses
   - N. Material Suppliers and Sub-Contractors
   - O. Non-Wavier of Rights
   - P. Protests of Awards Made
   - Q. Provisions Required by Law
   - R. Right to Assurance
   - S. Suspension or Disbarment Status
   - T. Affirmative Action
   - U. Severability
   - V. Relationship of Parties
10. FORMS
    - A, B, C, D, E, F, G & P
11. PRE-SUBMISSION CHECKLIST

1. INTRODUCTION

A. ABOUT NJPA

1.1 The National Joint Powers Alliance®- (NJPA)- is a public agency serving as a national municipal contracting agency established under the Service Cooperative statute by Minnesota Legislative Statute §123A.21 with the authority to develop and offer, among other services, cooperative procurement services to its membership. Eligible membership and participation includes states, cities, counties, all government agencies, both public and non-public educational agencies, colleges, universities and non-profit organizations.

1.2 Under the authority of Minnesota state laws and enabling legislation, NJPA facilitates a competitive bidding and contracting process on behalf of the needs of itself and the needs of current and potential member agencies nationally. This process results in national procurement contracts with various Vendors of products/equipment and services which NJPA Member agencies desire to procure. These procurement contracts are created in compliance with applicable Minnesota Municipal Contracting Laws. A complete listing of NJPA cooperative procurement contracts can be found at http://www.njpacoop.org/contract-purchasing-solutions/contracts.

1.3 NJPA is a public agency governed by publicly elected officials that serve as the NJPA Board of Directors. NJPA's Board of Directors calls for all proposals, awards all Contracts, and hosts those resulting Contracts for the benefit of its own and its Members use.

1.3.1 **Subject to Approval of the NJPA Board**: NJPA contracts are awarded by the action of NJPA Board of Directors. This action is based on the open and competitive bidding process facilitated by NJPA. The evaluation and resulting recommendation is presented to the Board of Directors by the NJPA Proposal Evaluation Committee.

1.4 NJPA currently serves over 47,000 member agencies nationally. Both membership and utilization of NJPA contracts continue to expand, due in part to the increasing acceptance of Cooperative Purchasing throughout the government and education communities nationally.

B. JOINT EXERCISE OF POWERS LAWS

1.5 NJPA cooperatively shares those contracts with its Members nationwide through various "Joint Exercise of Powers Laws" established in Minnesota and other States. The Minnesota "Joint Exercise of Powers Law" is Minnesota Statute §471.59 which states "Two or more governmental units…may jointly or cooperatively exercise any power common to the contracting parties…" Similar Joint Exercise of Powers Laws exists within the laws of each State of the United States. This Minnesota Statute allows NJPA to serve Member agencies located in all other states. Municipal agencies nationally have the ability to participate in cooperative purchasing activities as a result of specific laws of their own state. These laws can be found on our website at http://www.njpacoop.org/contract-purchasing-solutions/legal-authority/state-procurement-resources.

C. WHY RESPOND TO A NATIONAL COOPERATIVE PROCUREMENT CONTRACT

1.6 National Cooperative Procurement Contracts create value for Municipal and Public Agencies, as well as for Vendors of products/equipment and services in a variety of ways:

1.6.1 National cooperative contracts potentially **save the time and effort** of Municipal and Public Agencies who would have been otherwise charged with soliciting vendor responses to individual RFP's, resulting in individual contracts, to meet the procurement needs of their respective agencies. Considerable time and effort is also potentially saved by the Vendors who would have had to otherwise respond each of those individual RFPs. A single, nationally

advertised RFP, resulting in a single, national cooperative contract can potentially replace thousands of individual RFPs for the same products/services that might have been otherwise advertised by individual NJPA member agencies.

1.6.2 NJPA contracts offer our Members nationally leveraged **volume purchasing discounts**. Our contract terms and conditions offer the opportunity for Vendors to recognize individual member procurement volume commitment through additional volume based contract discounts.

1.7 State laws that permit or encourage cooperative purchasing contracts do so with the belief that cooperative efficiencies will result in lower prices, better overall value, and considerable time savings.

1.8 The collective purchasing power of thousands of NJPA Member agencies nationwide offers the opportunity for volume pricing discounts. Although no sales or sales volume is guaranteed by an NJPA Contract resulting from this RFP, substantial volume is anticipated and volume pricing is requested and justified.

1.9 NJPA and its Members desire the best value for their procurement dollar as well as a competitive price. Pre-competed procurement contracts offer NJPA and its Member agencies the ability to directly compare non-price factors in their procurement analysis. Vendors have the opportunity to display and highlight value added attributes of their company, equipment/products and services without constraints of a typical individual proposal process.

D. THE INTENT OF THIS RFP

1.10. **A national contract awarded by the NJPA Board of Directors:** The intent of this RFP is to award a national contract by the action of the NJPA Board of Directors. This action will be influenced by the recommendation of the NJPA Proposal Evaluation Committee, and as a result of the competitive proposal and evaluation process which has been designed to reflect the best interests of NJPA and its Member agencies. NJPA is seeking the most responsive Vendor relationship(s) to meet this need. The goal and intent of this RFP is to follow through with an award and contract, which will be marketed nationally through a cooperative effort between the awarded vendor(s) and NJPA.

1.11 NJPA's primary intent is to establish and provide a national cooperative procurement contract, offering opportunities for NJPA and our Member agencies to procure quality product/equipment and services as desired and needed. Contracts are expected to offer price levels reflective of the potential and collective volume of NJPA and the nationally established NJPA membership base.

1.11.1 Beyond our primary intent, NJPA further desires to:

- Award a four year term contract with a fifth year contract option resulting from this RFP;
- Offer and apply any applicable technological advances throughout the term of a contract resulting from this RFP;
- Deliver "Value Added" aspects of the company, equipment/products and services as defined in the "Proposer's Response";
- Deliver wide spectrums of solutions to meet the needs and requirement of NJPA and NJPA Member agencies.
- Award an exclusive contract to the most responsive vendor when it is deemed to be in the best interest of NJPA and the NJPA Member agencies.

1.12 Non-Manufacturer Awards: NJPA reserves the right to make an award related to this invitation to a non-manufacturer or dealer/distributor if such action is in the best interests of NJPA and its Members.

1.13 Exclusive or Multiple Awards: Based on the goals and scope of this RFP, NJPA is requesting responders to demonstrate their ability to serve the needs of NJPA's national membership. It is NJPA's intent and desire to award a contract to a single exclusive Vendor to serve our membership's needs. To meet the goals of this RFP, NJPA reserves the right to award a Contract to multiple Proposers where the result of the responding Proposers justifies a multiple award and multiple contracts are deemed to be in the best interests of NJPA Member agencies.

E. SCOPE OF THIS RFP

1.14 The scope, goal and intent of this RFP is to award a contract to a qualifying vendor defined as a manufacturer, provider, or dealer/distributor, established as a Proposer, and deemed responsive through our open and competitive proposal process. Vendors will be awarded contracts based on the proposal and responders demonstrated ability to meet the expectations of the RFP and demonstrate the overall highest valued solutions which meet and/or exceed the current and future needs and requirements of NJPA and its Member agencies nationally within the scope of **FLEET MANAGEMENT AND RELATED TECHNOLOGY SOLUTIONS**. Qualifying Proposers who are able to anticipate the current and future needs and requirements of NJPA and NJPA member agencies; demonstrate the knowledge of any and all applicable industry standards, laws and regulations; and possess the willingness and ability to distribute, market to and service NJPA Members in all 50 states are preferred. NJPA requests proposers submit their entire product line as it applies and relates to the scope of this RFP. All proposals deemed responsive will be evaluated based on their ability to provide the overall highest value to NJPA and NJPA Member agencies. One of the measures of overall highest value will be the proposed breadth and depth of products and services.

1.15 Best and Most Responsive – Responsible Proposer: It is the intent of NJPA to award a Contract to the best and most responsible and responsive Proposer(s) offering the best overall quality and selection of equipment/products and services meeting the commonly requested specifications of the NJPA and NJPA Members, provided the Proposer's Response has been submitted in accordance with the requirements of this RFP.

1.16 Sealed Proposals: NJPA will receive sealed proposal responses to this RFP in accordance with accepted standards set forth in the Minnesota Procurement Code and Uniform Municipal Contracting Law. Awards may be made to responsible and responsive Proposers whose proposals are determined in writing to be the most advantageous to NJPA and its current or qualifying future NJPA Member agencies.

1.17 Use of Contract: Any Contract resulting from this solicitation shall be awarded with the understanding that it is for the sole convenience of NJPA and its Members. NJPA and/or its members reserve the right to obtain like product/equipment and services solely from this Contract or from another contract source of their choice or from a contract resulting from their own procurement process.

1.18 NJPA's interest in a contract resulting from this RFP: Not withstanding its own use, to the extent NJPA issues this RFP and any resulting contract for the use of its Members, NJPA's interests and liability for said use shall be limited to the competitive proposal process performed and terms and conditions relating to said contract and shall not extend to the products, services, or warranties of the Awarded Vendor or the intended or unintended effects of the product/equipment and services procured there from.

1.19 Awarded Vendor's interest in a contract resulting from this RFP: Awarded Vendors will be able to offer to NJPA, and current and potential NJPA Members, only those products/equipment and services specifically awarded on their NJPA Awarded Contract(s). Awarded Vendors may not offer as "contract compliant", products/equipment and services which are not specifically identified and priced in their NJPA Awarded Contract.

1.20 Sole Source of Responsibility- NJPA desires a "Sole Source of Responsibility" Vendor meaning the Vendor will take sole responsibility for the performance of delivered products/services. NJPA also desires sole responsibility with regard to:

1.20.1 Scope of Products/Services: NJPA desires a provider for the broadest possible scope of products/equipment and services being proposed over the largest possible geographic area and to the largest possible cross-section of NJPA current and potential Members.

1.20.2 Vendor use of sub-contractors in sourcing or delivering product/equipment and services: NJPA desires a single source of responsibility for equipment/products and services proposed. Proposers are assumed to have sub-contractor relationships with all organizations and individuals whom are external to the Proposer and are involved in providing or delivering the product/equipment and services being proposed. Vendor assumes all responsibility for the equipment/products and services and actions of any such Sub-Contractor.

1.21 Additional Definitions for the scope of this solicitation.

1.21.1 In addition to **FLEET MANAGEMENT AND RELATED TECHNOLOGY SOLUTIONS, this solicitation should be read to include, but not limited to:**

1.21.1.1 This solicitation is not intended to include maintenance services or supplies for individual or fleets of vehicles/equipment.

1.21.2 NJPA reserves the right to limit the scope of this solicitation for NJPA and current and potential NJPA member agencies.

1.22 Suggested Solutions Options

1.22.1 All potential Proposers are assumed to be professionals in their respective fields. As professionals you are deemed to be intimately familiar with the spectrum of NJPA and NJPA Members' needs and requirements with respect to the scope of this RFP.

1.22.2 With this intimate knowledge of NJPA and NJPA Members' needs, Proposers are instructed to provide their proposal response in a format describing their solutions to those current and future needs and requirements. Proposers should take care to be economical in their response to this RFP.

1.22.3 Multiple solutions to the needs of NJPA and NJPA Members are possible. **Examples could include:**

1.22.3.1Equipment/Products Only Solution: Equipment/products Only Solution may be appropriate for situations where NJPA or NJPA Members possess the ability, either in-house or through local third party contractors, to properly install and bring to operation those equipment/products being proposed.

1.22.3.2 Turn-Key Solutions: A Turn-Key Solution is a combination of equipment/products and services which provides a single price for equipment/products, delivery, and installation to a properly operating status. Generally this is the most desirable solution as NJPA and NJPA Members may not possess, or desire to engage, personnel with the necessary expertise to complete these tasks internally or through other independent contractors

1.22.3.3 Good, Better, Best: Where appropriate and properly identified, Proposers are invited to offer the CHOICE of good – better – best multiple grade solutions to NJPA and NJPA Members' needs.

1.22.3.4 Proven – Accepted – Leading Edge Technology: Where appropriate and properly identified, Proposers are invited to provide an appropriate identified spectrum of technology solutions to compliment or enhance the functionality of the proposed solutions to NJPA and NJPA Members' needs both now and into the future.

1.23 Overlap of Scope:

1.23.1 When considering equipment, products, or groups of product/equipment and services submitted as a part of your response, and whether inclusion of such will fall within a "Scope of Proposal", please consider the validity of an inverse statement.

- For example, pencils and post-it-notes can generally be classified as office supplies and office supplies generally include pencils and post-it-notes.
- In contrast, computers (PCs and peripherals) can generally be considered office supplies; however, the scope of office supplies does not generally include computer servers and infrastructure.
- In conclusion: With this in mind, individual products and services must be examined individually by NJPA, from time to time and in its sole discretion, to determine their compliance and fall within the original "Scope" as intended by NJPA.

1.24 Geographic Area to be Proposed: This RFP invites proposals to provide **FLEET MANAGEMENT AND RELATED TECHNOLOGY SOLUTIONS** to NJPA and NJPA Members throughout the entire United States and possibly internationally. Proposers will be expected to express willingness to explore service to NJPA Members located abroad; however the lack of ability to serve Members outside of the United States will not be cause for non-award. The ability and willingness to serve Canada, for instance, will be viewed as a value-added attribute.

1.25 Manufacturer as a Proposer: If the Proposer is a Manufacturer or wholesale distributor, the response received will be evaluated on the basis of a response made in conjunction with that Manufacturer's authorized Dealer Network. Unless stated otherwise, a Manufacturer or wholesale distributor Proposer is assumed to have a documented relationship with their Dealer Network where that Dealer Network is informed of, and authorized to accept, purchase orders pursuant to any Contract resulting from this RFP on behalf of the Manufacturer or wholesale distributor Proposer. Any such dealer will be considered a sub-contractor of the Proposer/Vendor. The relationship between the Manufacturer and wholesale distributor Proposer and its Dealer Network may be proposed at the time of the proposed submission if that fact is properly identified.

1.26 Dealer/Re-seller as a Proposer: If the Proposer is a dealer or re-seller of the products and/or services being proposed, the response will be evaluated based on the Proposer's authorization to provide those products and services from their manufacturer. Where appropriate, Proposers must document their authority to offer those products and/or services.

1.27 Contract Term: At NJPA's option a contract resulting from this RFP will become effective either; 1) The date awarded by the NJPA Board of Directors, or 2) The day following the expiration date of an existing NJPA procurement contract for the same or similar product/equipment and services.

1.27.1 NJPA is seeking a Contract base term of four years subject to annual renewals as allowed by Minnesota Contracting Law. Full term is expected, however will only occur through successful annual renewals. One additional one-year renewal-extension may be offered by NJPA to Vendor beyond the original four year term if NJPA deems such action to be in the best interests of NJPA and its Members.

1.28 Minimum Contract Value: NJPA anticipates considerable activity resulting from this RFP and subsequent award; however, no commitment of any kind is made concerning actual quantities to be acquired. NJPA does not guarantee usage. Usage will depend on the actual needs of the NJPA Members and the value of the awarded contract.

1.29 Estimated Contract Volume: Estimated quantities and sales volume are based on potential usage by NJPA and NJPA Member agencies nationally.

1.30 Largest Possible Solution: If applicable, Contracts will be awarded to Proposer(s) able to deliver a proposal meeting the entire needs of NJPA and its Members within the scope of this RFP. NJPA prefers Proposers submit their complete product line of products and services described in the scope of this RFP. NJPA reserves the right to reject individual, or groupings of specific equipment/products and services proposals as a part of the award.

1.31 Contract Availability: This Contract must be available to all current and potential NJPA Members who choose to utilize this NJPA Contract to include all governmental and public agencies, public and private primary and secondary education agencies, and all non-profit organizations nationally.

1.32 Proposer's Commitment Period: In order to allow NJPA the opportunity to evaluate each proposal thoroughly, NJPA requires any response to this solicitation be valid and irrevocable for ninety (90) days after the date proposals were opened regarding this RFP.

F. EXPECTATIONS FOR EQUIPMENT/PRODUCTS AND SERVICES BEING PROPOSED

1.33 Industry Standards: Except as contained herein, the specifications or solutions for this RFP shall be those accepted guidelines set forth by the **FLEET MANAGEMENT AND RELATED TECHNOLOGY SOLUTIONS** industry, as they are generally understood and accepted within that industry across the nation. Submitted products/equipment, related services, and their warranties and assurances are required to meet and/or exceed all current, traditional and anticipated needs and requirements of NJPA and its Members.

1.33.1 Deviations from industry standards must be identified by the Proposer and explained how, in their opinion, the equipment/products and services they propose will render equivalent functionality, coverage, performance, and/or related services. Failure to detail all such deviations may comprise sufficient grounds for rejection of the entire proposal.

1.33.2 Technical Descriptions/Specifications. Proposers must supply **sufficient** information to:

- Demonstrate the Proposer's knowledge of industry standards, and
- Identify the equipment/products and services being proposed, and
- Differentiate those products and services from others.

Excessive technical descriptions and specifications which, in the opinion of NJPA unduly enlarge the proposal response may reduce evaluation points awarded on Form G.

1.34 Important note: NJPA does not typically provide product and service specifications; rather NJPA is requesting an industry standard or accepted specification for the requested product/equipment and services. Where specific line items are specified, those line items should be considered the minimum which can be expanded by the Proposer to deliver the Proposer's "Solution" to NJPA and NJPA Members' needs.

1.35 Commonly used Product/Equipment and Services: It is important that the equipment/products and services submitted are the equipment/products and services commonly used by public sector entities.

1.36 New Current Model Product/Equipment: Proposals submitted shall be for new, current model products and services with the exception of certain close-out products allowed to be offered on the Proposer's "Hot List" described herein.

1.37 Compliance with laws and standards: All items supplied on this Contract shall comply with any current applicable safety or regulatory standards or codes.

1.38 Delivered and operational; Products/equipment offered herein are to be proposed based upon being delivered and operational at the NJPA Member's site. Exceptions to "delivered and operational" must be explicitly disclosed in the "Total Cost of Acquisition" section of your proposal response.

1.39 Warranty: The Proposer warrants that all products, equipment, supplies, and services delivered under this Contract shall be covered by the industry standard or better warranty. All products and equipment should carry a minimum industry standard manufacturer's warranty that includes materials and labor. The Proposer has the primary responsibility to submit product specific warranty as required and accepted by industry standards. Dealer/Distributors agree to assist the purchaser in reaching a solution in a dispute over warranty's terms with the manufacturer. Any manufacturer's warranty which is effective past the expiration of the warranty will be passed on to the NJPA member. Failure to submit a minimum warranty may result in non-award.

1.40 Proposer's Warrants: The Proposer warrants all products/equipment and related services furnished hereunder will be free from liens and encumbrances; defects in design, materials, and workmanship; and will conform in all respects to the terms of this RFP including any specifications or standards. In addition, Proposer/Vendor warrants the products/equipment and related services are suitable for and will perform in accordance with the purposes for which they were intended.

G. SOLUTIONS BASED SOLICITATION

1.41 NJPA solicitations and contract process will not offer specific specifications for proposers to meet or base your response on. This RFP is a "Solutions Based Solicitation". This means the proposers are asked to understand and anticipate the current and future needs of NJPA and the nationally located NJPA membership base, within the scope of this RFP, and including specifications commonly desired or required by law or industry standards. Your proposal will be evaluated in part on your demonstrated ability to meet or exceed the needs and requirements of NJPA and our member agencies within the defined scope of this RFP.

H. INQUIRY PERIOD

1.42 The inquiry period shall begin at the date of first advertisement and continue to the "Deadline for Requests". RFP packages shall be distributed to Potential Bidders during the inquiry period. The purpose for the defined "Inquiry Period" is to provide a finite group of Potential Bidders to invite to, and attend the pre-bid conference.

I. PRE-BID CONFERENCE

1.43 All Potential Bidders inquiring during the inquiry period will be invited to the OPTIONAL "Pre-Bid Conference" via the e-mail address used to make their inquiry. The purpose of the pre-bid conference is to allow Potential Bidders to ask questions and hear answers from their own questions and the questions of other Potential Bidders.

2. DEFINITIONS

A. PROPOSER - VENDOR

2.1 Exclusive Vendor- A sole Vendor awarded in a product category. NJPA reserves the right to award to an Exclusive Vendor in the event that such an award is in the best interests of NJPA Members nationally. A Proposer that exhibits and demonstrates the ability to offer and execute an outstanding overall program, demonstrates the ability and willingness to serve NJPA current and qualifying Members in all 50 states and comply with all other requirements of this RFP, is preferred.

2.2 Potential Proposer- A person or entity requesting a copy of this RFP.

2.3 Proposer- A company, person, or entity delivering a timely response to this RFP.

2.4 Vendor- One of a number of Proposers whose proposal has been awarded a contract pursuant to this RFP.

2.5 Request for Proposal- Herein referred to as RFP

B. CONTRACT

2.6 "Contract" as used herein shall mean cumulative documentation consisting of this RFP, fully executed forms C, D, F & P from the Proposer's response pursuant to this RFP, and a fully executed form E, "Acceptance and Award" with final terms and conditions.

Form E will be executed on or after award and will provide final clarification of terms and conditions of the award.

C. TIME

2.7 Periods of time, stated as number of days, shall be in calendar days.

D. PROPOSER'S RESPONSE

2.8 A Proposer's Response is the entire collection of documents as they are received by NJPA from a Potential Proposer in response to this RFP.

E. CURRENCY

2.9 All transactions are payable in U.S. dollars on U.S. sales. All administrative fees are to be paid in U.S. dollars.

F. FOB

2.10 FOB stands for "Freight On Board" and defines the point at which responsibility for loss and damage of product/equipment purchased is transferred from Seller to Buyer. "FOB Destination" defines that transfer of responsibility for loss is transferred from Seller to Buyer at the Buyer's designated delivery point.

2.11 FOB does not identify who is responsible for the costs of shipping. The responsibility for the costs of shipping is addressed elsewhere in this document.

3. INSTRUCTIONS FOR PREPARING YOUR PROPOSAL

A. PRE-PROPOSAL CONFERENCE

3.1 A non-mandatory pre-proposal conference will be held at the date and time specified in the time line on page one of this RFP. Conference call and web connection information will be sent to all Potential

Proposers through the same means employed in their inquiry. The purpose of this conference call is to allow Potential Proposers to ask questions regarding this RFP. Only answers issued in writing by NJPA to questions asked before or during the Pre-proposal Conference shall be considered binding.

B. IDENTIFICATION OF KEY PERSONNEL

3.2 Vendor will designate one senior staff individual who will represent the awarded Vendor to NJPA. This contact person will correspond with members for technical assistance, questions or problems that may arise including instructions regarding different contacts for different geographical areas as needed.

3.3 Individuals should also be identified (if applicable) as the primary contacts for the contents of this proposal, marketing, sales, and any other area deemed essential by the Proposer.

C. PROPOSER'S EXCEPTIONS TO TERMS AND CONDITIONS

3.4 Any exceptions, deviations, or contingencies a Proposer may have to the terms and conditions contained herein must be documented on Form C.

3.5 Exceptions, deviations or contingencies stipulated in Proposer's Response, while possibly necessary in the view of the Proposer, may result in disqualification of a Proposal Response.

D. FORMAL INSTRUCTIONS TO PROPOSERS

3.6 It is the responsibility of all Proposers to examine the entire RFP package, to seek clarification of any item or requirement that may not be clear and to check all responses for accuracy before submitting a Proposal. Negligence in preparing a Proposal confers no right of withdrawal after the deadline for submission of proposals.

3.7 All proposals must be sent to "The National Joint Powers Alliance®, 202 12th ST NE Staples, MN 56479."

3.8 Format for proposal response: All proposals must be physically delivered to NJPA at the above address in the following format:

3.8.1 Hard copy original signed, completed, and dated forms C,D,F, and hard copy signed signature page only from forms A and P from this RFP,

3.8.2 Hard copies of all addenda issued for the RFP with original counter signed by the Proposer,

3.8.3 Certificate of insurance verifying the coverage identified in this RFP,

3.8.4 Two complete copies of your response on a CD (Compact Disc) or flash drive. The first copy shall be identified as the "Evaluation Copy" and the second copy will be identified as the "Public Records" copy. Both copies shall contain completed Forms A,B,C,D,F & P, your statement of products and pricing together with all appropriate attachments, a copy of your audited financial statements from previous year end(or an unaudited copy if an audited copy is not available). However, your "Public Record Copy" shall have all "Confidential information" information redacted. You will be responsible for citing specific legal authority for each redaction as identified herein.

3.9 All Proposal forms must be submitted in English and be legible. All appropriate forms must be executed by an authorized signatory of the Proposer. Blue ink is preferred for signatures.

3.10 Proposal submissions should be submitted using the electronic forms provided. If a Proposer chooses to use alternative documents for their response, the proposer will be responsible for ensuring the content is effectively equal to the NJPA form and the document is in a format readable by NJPA.

3.11 It is the responsibility of the Proposer to be certain the proposal submittal is in the physical possession of NJPA on or prior to the deadline for submission of proposals.

3.11.1 Proposals must be submitted in a sealed envelope or box properly addressed to NJPA and prominently identifying the proposal number, proposal category name, the message **"Hold for Proposal Opening",** and the deadline for proposal submission. NJPA cannot be responsible for late receipt of proposals. Proposals received by the correct deadline for proposal submission will be opened and the name of each Proposer and other appropriate information will be publicly read.

3.12 Corrections, erasures, and interlineations on a Proposer's Response must be initialed by the authorized signer in original ink on all copies to be considered.

3.13 Addendums to the RFP: The Proposer is responsible for ensuring receipt of all addendums to this RFP.

3.13.1 Proposer's are responsible for checking directly with the NJPA website for addendums to this RFP.

3.13.2 Addendums to this RFP can change terms and conditions of the RFP including the deadline for submission of proposals.

E. QUESTIONS AND ANSWERS ABOUT THIS RFP

3.14 Upon examination of this RFP document, Proposer shall promptly notify the NJPA of any ambiguity, inconsistency, or error they may discover. Interpretations, corrections and changes to this RFP will be made by NJPA through addendum. Interpretations, corrections, or changes made in any other manner will not be binding and Proposer shall not rely upon such.

3.15 Submit all questions about this RFP, in writing, referencing **"FLEET MANAGEMENT AND RELATED TECHNOLOGY SOLUTIONS** to Gregg Meierhofer, NJPA 202 12th Street NE, Staples, MN 56479 or RFP@njpacoop.org. Those not having access to the Internet may call Gregg Meierhofer at (218) 894-1930. Requests for additional information or interpretation of instructions to Proposers or technical specifications shall also be addressed to Gregg Meierhofer. NJPA urges Potential Proposers to communicate all concerns well in advance of the deadline to avoid misunderstandings. Questions received less than seven (7) days ending at 4:00 p.m. Central Time of the seventh (7th) calendar day prior to proposal due-date cannot be answered.

3.16 If the answer to a question is deemed by NJPA to have a material impact on other potential proposers or the RFP itself, the answer to the question will become an addendum to this RFP.

3.17 If the answer to a question is deemed by NJPA to be a clarification of existing terms and conditions and does not have a material impact on other potential proposers or the RFP itself, no further documentation of that question is required.

3.18 As used in this solicitation, clarification means communication with a Potential Proposer for the sole purpose of eliminating minor irregularities, informalities, or apparent clerical mistakes in the RFP.

3.19 Addenda are written instruments issued by NJPA that modify or interpret the RFP. All addenda issued by NJPA shall become a part of the RFP. Addenda will be delivered to all Potential Proposers using the same method of delivery of the original RFP material. NJPA accepts no liability in connection with the delivery of said materials. Copies of addenda will also be made available on the NJPA website at www.njpacoop.org by clicking on "Current and Pending Solicitations" and from the NJPA offices. No questions will be accepted by NJPA later than five (5) days prior to the deadline for receipt of proposals, except an addendum withdrawing the request for proposals or one that includes postponement of the date of receipt of proposals. Each Potential Proposer shall ascertain prior to submitting a Proposal that it has received all addenda issued, and the Proposer shall acknowledge their receipt in its Proposal Response.

3.20 An amendment to a submitted proposal must be in writing and delivered to NJPA no later than the

time specified for opening of all proposals.

F. MODIFICATION OR WITHDRAWAL OF A SUBMITTED PROPOSAL

3.21 A submitted proposal may not be modified, withdrawn from or cancelled by the Proposer for a period of ninety (90) days following the date proposals were opened regarding this RFP. **Prior** to the deadline for submission of proposals, any proposal submitted may be modified or withdrawn by notice to the NJPA Manager of Bids and Contracts. Such notice shall be submitted in writing and include the signature of the Proposer and shall be delivered to NJPA prior to the deadline for submission of proposals and it shall be so worded as not to reveal the content of the original proposal. However, the original proposal shall not be physically returned to the Potential Proposer until after the official proposal opening. Withdrawn proposals may be resubmitted up to the time designated for the receipt of the proposals if they are then fully in conformance with the Instructions to Proposer.

G. VALUE ADDED ATTRIBUTES, PRODUCTS/SERVICES

3.22 Examples of Value Added Attributes: Value-Added attributes, products and services are items offered in addition to the products and services being proposed which adds value to those items being proposed. The availability of a contract for maintenance or service after the initial sale, installation, and set-up may, for instance, be "Value Added Services" for products where a typical buyer may not have the ability to perform these functions.

3.23 Where to document Value Added Attributes: The opportunity to indicate value added dimensions and such advancements will be available in the Proposer's Questionnaire and Proposer's product and service submittal.

3.24 Value added equipment/products and services and expanded services, as they relate to this RFP, will be given positive consideration in the award selection. Consideration will be given to an expanded selection of "FLEET MANAGEMENT AND RELATED TECHNOLOGY SOLUTIONS", and advances to provide products/services, supplies meeting and/or exceeding today's industry standards and expectations. A value add would include a program or service that further serves the members needs above and possibly beyond standard expectation and complements the equipment/products and services and training. Value added could include areas of product and service, sales, ordering, delivery, performance, maintenance, technology, and service that furthers the functionality and effectiveness of the procurement process while remaining within the scope of this RFP.

3.25 Minority, Small Business, and Women Business Enterprise (WMBE) participation: It is the policy of some NJPA Members to involve Minority, Small Business, and WMBE contractors in the process to purchase product/equipment and related services. Vendors should document WMBE status for their organization AND any such status of their affiliates (i.e. Supplier networks) involved in carrying out the activities invited. The ability of a Proposer to provide "Credits" to NJPA and NJPA Members in these subject areas, either individually or through related entities involved in the transaction, will be evaluated positively by NJPA and reflected in the "value added" area of the evaluation. NJPA is committed to facilitating the realization of such "Credits" through certain structuring techniques for transactions resulting from this RFP.

3.26 Environmentally Preferred Purchasing Opportunities: There is a growing trend among NJPA Members to consider the environmental impact of the equipment/products and related services they purchase. "Green" characteristics demonstrated by responding companies will be evaluated positively by NJPA and reflected in the "value added" area of the evaluation. Please identify any Green characteristics of the product/equipment and related services in your proposal and identify the sanctioning body determining that characteristic. Where appropriate, please indicate which products have been certified as "green" and by which certifying agency.

3.27 On-Line Requisitioning systems: When applicable, on-line requisitioning systems will be viewed as a value-added characteristic. Proposer shall include documentation about user interfaces that make on-line ordering easy for NJPA Members as well as the ability to punch-out from mainstream e-Procurement or Enterprise Resource Planning (ERP) systems that NJPA Members may currently utilize.

3.28 Financing: The ability of the Proposer to provide financing options for the products and services being proposed will be viewed as a Value Added Attribute.

H. CERTIFICATE OF INSURANCE

3.29 Proposer shall provide evidence of liability insurance coverage identified below in the form of an ACCORD binder form with their proposal. Upon Award issued pursuant to this contract, and prior to the execution of any commerce relating to such award, Vendor will be responsible for providing verification, in the form of an ACCORD binder identifying the coverage required below and identifying NJPA as a "Certificate Holder" and an "Additional Insured". Vendor will be responsible to maintain such insurance coverage at their own expense throughout the term of any contract resulting from this solicitation.

3.30 Vendor, upon award, shall be required to maintain the following insurance coverage during the term of the NJPA Contract:

(1) Workers Compensation insurance (Occurrence) with the following minimum coverage: Bodily injury by accident--per employee $100,000; Bodily injury by disease--per employee $100,000; Policy limits $500,000. In addition, Proposer shall require all subcontractors occupying the premises or performing work under the contract to obtain an insurance certificate showing proof of Workers Compensation Coverage with the following minimum coverage: Bodily injury by accident--per employee $100,000; Bodily injury by disease--per employee $100,000; Policy limits $500,000.
(2) Commercial General Liability Policy per occurrence $1,000,000.
(3) Business Auto Policy to include but not be limited to liability coverage on any owned, non-owned and hired vehicle used by Proposer or Proposer's personnel in the performance of this Contract. The Business Automobile Policy shall have a per occurrence limit of $1,000,000.

3.31 The foregoing policies shall contain a provision that coverage afforded under the policies will not be canceled, or not renewed or allowed to lapse for any reason until at least thirty (30) days prior written notice has been given to NJPA. Certificates of Insurance showing such coverage to be in force shall be filed with NJPA prior to commencement of any work under the contract. The foregoing policies shall be obtained from insurance companies licensed to do business nationally and shall be with companies acceptable to NJPA, which must have a minimum AM Best rating of A-. All such coverage shall remain in full force and effect during the term and any renewal or extension thereof.

I. ORDER PROCESS AND/OR FUNDS FLOW

3.32 Please propose an order process and funds flow. Please choose from one of the following:

3.32.1 B-TO-G: The Business-to-Government order process and/or funds flow model involves NJPA Members issuing Purchase Orders directly to a Vendor and pursuant to a Contract resulting from this RFP.

3.32.3 Other: Please fully identify.

J. ADMINISTRATIVE FEES

3.33 Proposer agrees to authorize and/or allow for an administrative fee payable to NJPA by an Awarded Vendor in exchange for its facilitation and marketing of a Contract resulting from this RFP to current and potential NJPA Members. This Administration Fee shall be:

3.33.1 Calculated as a percentage of the dollar volume of all equipment/products and services provided to and purchased by NJPA Members or calculated as reasonable and acceptable method applicable to the contracted transaction, and

3.33.2 Included in, and not added to, the pricing included in Proposer's Response to this RFP, and

3.33.3 Designed to offset the anticipated costs of NJPA's involvement in contract management, facilitating marketing efforts, Vendor training, and any order processing tasks relating to the Contract resulting from this RFP.

3.33.3.1 Typical administrative fees for a B-TO-G order process and funds flow is 2.0%.

3.34 The opportunity to propose these factors and an appropriate administrative fee is available in the Proposer's Questionnaire.

4. PRICING STRATEGIES

4.1 NJPA requests Potential Proposers respond to this RFP only if they are able to offer a wide array of equipment/products and services and at prices lower and better value than what they would ordinarily offer to single government agency, larger school district, or regional cooperative.

4.2 RFP is an "Indefinite Quantity Product/Equipment and Related Service Price and Program Request" with potential national sales distribution and service. Proposers are agreeing to fulfill Contract obligations regarding each product/equipment to which you provide a description and a price. If Proposer's solution requires additional supporting documentation, describe where it can be found in your submission. If Proposer offers the solution in an alternative fashion, describe your solution to be easily understood. All pricing must be copied on a CD along with other requested information as a part of a Proposer's Response.

4.3 Regardless of the payment method selected by NJPA or NJPA Member, a total cost associated with any purchase option of the equipment/products and services and being supplied must always be disclosed at the time of purchase.

4.4 Primary Pricing/Secondary Pricing Strategies- All Proposers will be required to submit "Primary Pricing" in the form of either "Line-Item Pricing," or "Percentage Discount from Catalog Pricing," or a combination of these pricing strategies. Proposers are also encouraged to offer OPTIONAL pricing strategies such as but not limited to "Hot List," "Sourced Product/Equipment" and "Volume Discounts," as well as financing options such as leasing.

A. LINE-ITEM PRICING

4.5 Line-Item pricing- A pricing format where specific individual products and/or services are offered at specific individual Contract prices. Products/equipment and/or related services are individually priced and described by characteristics such as manufacture name, stock or part number, size, or functionality. This method of pricing offers the least amount of confusion as products/equipment and prices are individually identified however, Proposers with a large number of products/equipment to propose may find this method cumbersome. In these situations, a percentage discount from catalog or category pricing model may make more sense and increase the clarity of the contract pricing format.

4.6 All Line-Item Pricing items must be numbered, organized, sectioned, including SKU's (when applicable) and easily understood by the Evaluation Committee and members.

4.7 Line-Item Pricing items are to be submitted in an Excel spreadsheet format provided and are to include all appropriate identification information necessary to discern the line item from other line items

in each Responder's proposal.

4.8 The purpose for the excel spreadsheet format for Line-Item Pricing is to be able to use the "Find" function to quickly find any particular item of interest. For that reason, Proposers are responsible for providing the appropriate product and service identification information along with the pricing information which is typically found on an invoice or price quote for such products/equipment and related services.

4.9 All products/equipment and related services typically appearing on an invoice or price quote must be individually priced and identified on the line-item price sheet, including any and all ancillary costs.

4.10 Proposers are asked to provide both a published "List" price as well as a "Proposed Contract Price" in their pricing matrix. "The published List" price will be the standard "quantity of one" price currently available to government and educational customers excluding cooperative and volume discounts.

B. PERCENTAGE DISCOUNT FROM CATALOG OR CATEGORY

4.11 Percent Discount From Catalog, list or Category Pricing- A specific percentage discount from a "Catalogue or List Price" defined as a published Manufacturer's Suggested Retail Price (MSRP) for the products/equipment or related services being proposed.

4.12 Individualized percentage discounts can be applied to any number of defined product groupings.

4.13 A Percentage Discount from MSRP may be applied to all elements identified in MSRP including all Manufacturer Options applicable to the product/equipment or related service.

4.14 Accessory options requested by the customer and related to the general scope of this RFP but are not under the current contract will be priced using a "Sourced Product/equipment pricing model" as defined herein. See Section F

4.15 When a Proposer elects to use "Percentage Discount from Catalog or Category," Proposer will be responsible for providing and maintaining current published "MSRP" with NJPA and must be included in their proposal and provided throughout the term of any Contract resulting from this RFP.

4.16 NJPA reserves the right to review catalogs submitted to determine if the represented products and services reflect and relate to the scope of this RFP. Each new catalog received may have the effect of adding new product offerings and deleting products no longer carried by the Vendor. New catalogs shall apply to the Contract only upon approval of the NJPA. Non-approved use of catalogs may result in termination for convenience. New price lists or catalogs found to be offering non-contract items during the Contract may be grounds for terminating the Contract for convenience. New optional accessories for product/equipment and related services may be added to the Contract through the NJPA approval process at the time they become available.

C. HOT LIST PRICING

4.17 Where applicable, NJPA also invites the Vendor, at their option, to offer a specific selection of products/services, defined as a Hot List selection offer pricing at greater discounts or related advantages than those listed in the standard Contract pricing. All product/service pricing, including the Hot List Pricing, must be submitted electronically provided in Excel format. Hot List pricing must be submitted in a Line-Item format. Providing or offering a "Hot List Selection" of equipment/products and related services is optional. Equipment/products and related services may be added or removed from the "Hot List" at any time.

4.18 Hot List program and pricing when applicable may also be used to discount and liquidate close-out

and discontinued equipment/products and related services as long as those close-out and discontinued items are clearly labeled as such. Current ordering process and administrative fees apply. This option must be published and made available to all NJPA Members.

4.19 Hot List Program and Pricing is allowed to change at the discretion of the Vendor within the definition of Hot List Pricing. The Vendor is responsible to maintain current Hot List product/equipment and related service descriptions and Pricing with NJPA.

D. CEILING PRICE

4.20 Proposal pricing is to be established as a ceiling price. At no time may the proposed equipment/products and related services be offered pursuant to this Contract at prices above this ceiling price without request and approval by NJPA. **IMPORTANT NOTE:** Contract prices may be reduced to allow for volume considerations and commitments and to meet the specific and unique needs of an NJPA Member.

4.21 Allowable specific needs may include competitive situations, certain purchase volume commitments or the creation of custom programs based on the individual needs of NJPA Members.

E. VOLUME PRICE DISCOUNTS

4.22 Proposers are free to offer volume commitment discounts from the contract pricing documented in a Contract resulting from this RFP. Volume considerations shall be determined between the Vendor and individual NJPA Members on a case-by-case basis.

4.23 Nothing in this Contract establishes a favored member relationship between the NJPA or any NJPA Member and the Vendor. The Vendor will, upon request by NJPA Member, extend this same reduced price offered or delivered to another NJPA Member provided the same or similar volume commitment, specific needs, terms, and conditions, a similar time frame, seasonal considerations, locations, competitively situations and provided the same manufacturer support is available to the Vendor.

4.24 All price adjustments are to be offered equally to all NJPA Members exhibiting the same or substantially similar characteristics such as purchase volume commitments, and timing including the availability of special pricing from the Vendor's suppliers.

F. SOURCED PRODUCT/EQUIPMENT /OPEN MARKET ITEMS

4.25 NJPA or NJPA Members may from time to time, request product/equipment and/or equipment/products and related services that are within the related scope of this RFP, which are not included in an awarded Vendor's line-item product/equipment and related service listing or "list or catalog". These items are known as Sourced Product/Equipment or Open Market Items.

4.26 An awarded Vendor resulting from this RFP may "Source" equipment/products and related services for NJPA or an NJPA Member to the extent they:

4.26.1 Identify all such equipment, products and services as "Sources Product/Equipment " or "Open Market Items" on any quotation issued in reference to an NJPA awarded contract, and provided to either NJPA or an NJPA Member, and

4.26.2 All applicable acquisition regulations pertaining to the purchase of such equipment, products and services have been followed, as defined by NJPA or the NJPA Member receiving quotation from Vendor, and

4.26.3 NJPA or the NJPA Member has determined the prices as quoted by Vendor for such equipment, products and services are deemed to be fair and reasonable and are acceptable to the

member.

G. COST PLUS A PERCENTAGE OF COST

4.27 Cost plus a percentage of cost as a primary pricing mechanism is not desirable.

H. TOTAL COST OF ACQUISITION

4.28 The Total Cost of Acquisition for the equipment/products and related services being proposed, including those payable by NJPA Members to either the Proposer or a third party, shall be defined as:

- The cost of the proposed equipment/products product/equipment and related services delivered and operational for its intended purpose in the end-user's location.

4.29 For example, if you are proposing equipment/products only (IE, FOB Proposer's dock) your proposal would identify your deviation from the "Total Cost of Acquisition" of contracted equipment/products. The "Proposal should reflect that the contract does not provide for delivery beyond Proposer's dock, nor any set-up activities or costs associated with those delivery or set-up activities." In contrast, proposed terms including all costs for product/equipment and services delivered and operational at to the end-user's location would require a disclosure of "None".

I. REQUESTING PRODUCT/EQUIPMENT AND RELATED SERVICE ADDITIONS/DELETIONS

4.30 Requests for product/equipment and related services, price changes, additions, deletions, or any related contract changes must be made in written form and shall be subject to approval by NJPA.

4.31 New equipment/products and related services may be added to a Contract resulting from this RFP at any time during that Contract to the extent those equipment/products and related services are within the scope of this RFP. Those requests are subject to review and approval of NJPA. Allowable new equipment/products and related services generally include new updated models of equipment/products and related services and or enhanced services previously offered which could reflect new technology and improved functionality.

4.32 Proposers representing multiple manufacturers, or carrying multiple related product lines may also request the addition of new manufacturers or product lines to their Contract to the extent they remain within the scope of this RFP.

4.33 NJPA's due diligence in analyzing any request for change is to determine if approval of the request is 1) within the scope of the original RFP, and 2) in the "Best Interests of NJPA and NJPA Members." We are looking for consistent pricing and delivery mechanisms and an understanding of what value the proposal brings to NJPA and NJPA Members.

4.34 Documenting the "Best Interests of NJPA and NJPA Members" when outdated equipment is being deleted is fairly straight forward since the product is no longer available and not relevant to the procurement Contract.

4.35 Requests must be in the form of 1) a cover letter to NJPA a) asking to add the product/equipment line, b) making a general statement identifying how the products to be added are within the scope of the original RFP, and c) making a general statement identifying that, if appropriate, the pricing is consistent with the existing Contract pricing and 2) the detail as to what is being added at what price will then be an attachment to that cover letter. Pending approval of your request by NJPA you will need to provide a complete re-statement of all pricing including all new prices/products AND existing prices and products/equipment.

4.36 NJPA's intent is to encourage Proposers to provide and document NJPA's due diligence in a clear and concise one page format on which we can approve and sign our acknowledgment and acceptance.

This information must ultimately come from Proposers, and NJPA is requiring it in this format.

J. REQUESTING PRICING CHANGES

4.37 Price Decreases: Requests for standard Contract price decrease adjustments (percentage discount increases) are encouraged and will be allowed at any time based on market place efficiencies, market place competitiveness, improved technologies and/or improved methods of delivery or if Vendor engages in innovative procurement practices such as strategic sourcing, aggregate and volume purchasing. NJPA expects Vendors to propose their very best prices and anticipates price reductions due to the advancement of technologies and market place efficiencies. Documenting the "Best Interests of NJPA and NJPA Members" is highly valued when we are documenting price reductions.

4.38 Price increases: Requests for standard contract price increases (or the inclusion of new generation products/equipment/services at higher prices) can be made at any time. These requests will again be evaluated by NJPA based on the best interests of NJPA and NJPA Members. As an example, typically acceptable requests for price increases for existing equipment/products and services may cite increases to the Vendor of input costs such as petroleum or other applicable commodities. Typically acceptable requests for price increases for new equipment/products and services enhance or improve on the current solutions currently offered as well as cite increases in utility of the new compared to the old. Vendors are requested to reasonably document the claims cited in their requests. Your written request for a price increase, therefore, is an exercise in describing what you need, and a justification for why you need it in sufficient detail for NJPA to deem such change to be in the best interests of ourselves and our Members.

4.39 Price Change Request Format: An awarded Proposer will use the format of a cover letter requesting price increases in general terms (a 5% increase in product line X) and stating their justification for that price increase (due to the recent increase in petroleum or raw material costs) by product category. Specific details for the requested price change must be attached to the request letter identifying product/services where appropriate, both current and proposed pricing. Attachments such as letters from suppliers announcing price increases are appropriate for documenting your requests here.

K. PRICE AND PRODUCT CHANGES FORMAT

4.40 NJPA's due diligence regarding product and price change requests is to consider the reasonableness of the request and document consideration on behalf of our members. Submit the following documentation to request a pricing change:

4.40.1 A cover letter:

a. Please address the following subjects in your cover letter:

i. What product/equipment and related service prices are changing?

ii. How much are the prices changing?

iii. Why are the prices changing?

iv. Any additions or deletions from the previous product/equipment and related services list and the reason for the changes.

b. The specifics of the product/equipment and price changes will be listed in the excel spreadsheets identified below. Please take a more general "Disclosure" approach to identifying changes in the cover letter.

i. If applicable and **for example,** indicate "All paper equipment/products and services increased 5 % in price due to transportation and fuel costs."

ii. If applicable, for instance, indicate, "The 6400 series floor polisher added to the product list is the new model replacing the 5400 series. The 6400's 3% price increase reflects the rate of inflation over the past year. The 5400 series is now included in the "Hot List" at a 20% discount from previous pricing until remaining inventory is liquidated."

4.40.2 An excel spreadsheet identifying all equipment/products and services being offered and their pricing. Each subsequent pricing update will be saved using the naming convention of "(Vendor Name) pricing effective XX/XX/XXXX."

a. Include all equipment/products and services regardless of whether their prices have changed. By observing this convention we will:

i. Reduce confusion by providing a single, easy to find, current pricing sheet for each Vendor.

ii. Create a historical record of pricing.

L. SINGLE STATEMENT OF PRICING/HISTORICAL RECORD OF PRICING

4.41 Initially; and again with each request for product addition, deletion, and/or pricing change; you must state all pricing for all equipment/products and services available. The request for price changes described above will serve as the documentation for those requested changes. Each complete pricing list will be identified by its "Effective Date." Each successive price listing identified by its "Effective Date" will create a "Product and Price History" for the Contract.

4.42 Proposers may use the multiple tabs available in an Excel workbook to separately list logical product groupings or to separately list product and service pricing as they see fit.

4.43 All equipment/products and services together with their pricing, whether changed within the request or remaining unchanged, will be stated on each "Pricing" sheet created as a result of each request for product, service, or pricing change.

4.44 Each subsequent "Single Statement of Product and Pricing" will be archived by its effective date therefore creating a product and price history for any Contract resulting from this RFP. Proposers are required to create a historical record of pricing annually by submitting updated pricing referred to as a "Single Statement of Product/Equipment and Related Services Contract Price Update". This pricing update is required at a minimum of once per contract year.

M. PAYMENT TERMS

4.45 Payment terms will be defined by the Proposer in the Proposer's Response. Proposers are encouraged to offer payment terms through P Card services if applicable to the customary method of procurement relating to the contracted product/equipment and related services.

4.46 Leasing- If available, identify any leasing programs available to NJPA and NJPA Members as part of your proposal. Proposers should submit an example of the lease agreement to be used. Proposers should identify:

- General leasing terms such as:
  - The percentage adjustment over/under an index rate used in calculating the internal rate of return for the lease; and
  - The index rate being adjusted; and
  - The "Purchase Option" at lease maturity ($1, or fair market value); and
  - The available term in months of lease(s) available.
- Leasing company information such as:
  - The name and address of the leasing company; and
  - Any ownership, common ownership, or control between the Proposer and the Leasing Company.

N. SALES TAX

4.47 Sales and other taxes, where applicable, shall not be included in the prices quoted. Vendor will charge state and local sales and other taxes on items for which a valid tax exemption certification has not been provided. Each NJPA Member is responsible for providing verification of tax exempt status to

Vendor. When ordering, if applicable, NJPA Members must indicate that they are tax exempt entities. Except as set forth herein, no party shall be responsible for taxes imposed on another party as a result of or arising from the transactions contemplated by a Contract resulting from this RFP.

O. SHIPPING AND SHIPPING PROGRAM

4.48 Shipping program for material only proposals, or sections of proposals, must be defined as a part of the cost of product/equipment. If shipping is charged to NJPA or NJPA Member, only the actual cost of delivery may be added to an invoice. Shipping charges calculated as a percentage of the product price may not be used, unless such charges are lower than actual delivery charges. No COD orders will be accepted. It is desired that delivery be made within ninety-days (90) of receipt of the Purchase Order. See "The Total Cost of Acquisition" for the equipment/products and related services.

4.49 Any shipping cost charged to NJPA or NJPA Members will be considered to be part of "proposal pricing."

4.50 Additional costs for expedited deliveries will be at the additional shipping or handling expense to the NJPA Member.

4.51 Selection of a carrier for shipment will be the option of the party paying for said shipping. Use of another carrier will be at the expense of the requester.

4.52 Proposers must define their shipping programs for Alaska and Hawaii and any location not served by conventional shipping services. Over-size and over-weight items and shipments may be subject to custom freight programs.

4.53 Proposals containing restocking fees are less advantageous than those not containing re-stocking fees. That being said, certain industries cannot avoid restocking fees. Certain industries providing made to order product/equipment may not allow returns. With regard to returns and restocking fees, Proposers will be evaluated based on the relative flexibility extended to NJPA and NJPA Members relating to those subjects. Where used, restocking fees in excess of 15% will be considered excessive. Restocking fees may be waived, at the option of the Proposer/Vendor. Indicate all shipping and re-stocking fees in price program.

4.54 Proposer agrees shipping errors will be at the expense of the Vendor. For example, if a Vendor ships a product that was not ordered by the member, it is the responsibility of the Vendor to pay for return mail or shipment at the convenience of the member.

4.55 Unless specifically stated otherwise in the "Shipping Program" of a Proposer's Response, all prices quoted must be F.O.B. destination with the freight prepaid by the Vendor. Delivery effectiveness is very important aspect of this Contract. If completed deliveries are not made at the time agreed, NJPA or NJPA Member reserves the right to cancel and purchase elsewhere and hold Vendor accountable. If delivery dates cannot be met, Vendor agrees to advise NJPA or NJPA Member of the earliest possible shipping date for acceptance by NJPA or NJPA Member.

4.56 Delivered products/equipment must be properly packaged. Damaged products/equipment will not be accepted, or if the damage is not readily apparent at the time of delivery, the products/equipment product/equipment shall be returned at no cost to NJPA or NJPA Member. NJPA and NJPA Members reserve the right to inspect the product/equipment at a reasonable time subsequent to delivery where circumstances or conditions prevent effective inspection of the product/equipment at the time of delivery.

4.57 Vendor shall deliver Contract conforming products/equipment in each shipment and may not substitute products/equipment without approval from NJPA Member.

4.58 NJPA reserves the right to declare a breach of Contract if the Vendor intentionally delivers substandard or inferior products/equipment which are not under Contract and described in its paper or electronic price lists or sourced upon request to any member under this Contract. In the event of the delivery of a non-conforming product/equipment, NJPA Member will immediately notify Vendor and the Vendor will replace non-conforming product/equipment with conforming product/equipment acceptable to the NJPA member.

4.59 Throughout the term of the Contract, Proposer agrees to pay for return shipment on product/equipment that arrives in a defective or inoperable condition. Proposer must arrange for the return shipment of damaged product/equipment.

4.60 Unless contrary to other parts of this solicitation, if the product/equipment or the tender of delivery fail in any respect to conform to this Contract, the purchasing member may: 1) reject the whole, 2) accept the whole or 3) accept any commercial unit or units and reject the rest.

P. NORMAL WORKING HOURS

4.61 Prices quoted are for equipment/products and services delivered during normal business hours. Normal Business hours will be as specifically defined herein, defined through industry standards OR defined through statement contained in the purchase/work order issued pursuant to a Contract resulting from this RFP.

5. MARKETING PLAN

5.1 Internal Marketing Plan: If you are awarded a contract based on this solicitation, your sales force will be the primary source of the contract success. Your sales force needs to be aware that the value of the contract includes:

- The use of the NJPA Contract will save their customer (NJPA's Member) the time and effort of bringing a new individual Request For Proposal (RFP).
- The use of the NJPA Contract will save you and your sales force the time and effort of responding to individual Request For Proposals (RFPs).
- The use of the NJPA Contract will offer NJPA members the opportunity to have the ability to choose your company's contracted product/equipment and related services.

An award of Contract resulting from this RFP is an opportunity for the awarded Vendor to pursue commerce with, and deliver valued contracted products/equipment and related service solutions to NJPA and NJPA Members nationwide. Your internal marketing plan should serve to:

5.1.1 Identify the appropriate levels of sales management whom will need to understand the value of, and the internal procedures necessary to deliver your Contract solution to NJPA and NJPA Members through your marketing and sales efforts.

5.1.2 Identify, in general, your national footprint and dedicated feet-on-the-street sales force that will be carrying this Contract message and opportunity in the field to NJPA Members. Outline the sale force network in terms of numbers and geographic location and distribution of the product/equipment and related services. Service may be independent of the sales of the product/ equipment. Demonstrate fully the sales and service capabilities of your company through your response.

5.1.2.1 Identify whether your sales force are employees or independent contractors. Identify whether your dealers are company owned or independently owned.

5.1.3 Identify your plan for delivering training to these individuals.

5.1.3.1 Will you have your sales force or dealer network gathered at national or regional events in the near future? Does you sales force or dealer network have the ability to participate in sales training webinar or webcast events?

5.1.3.2 NJPA is prepared to provide our personnel for sales training and/or on a webinar or webcast or other methodologies to effectively reach the appropriate groups within your sales management, dealer network and sales force.

5.1.4 Sales Management Contract Training.

5.1.4.1 NJPA will commit to providing contract sales training regarding all aspects of communicating the value of the Contract itself, the authority of NJPA to offer the Contract to its Members, the value the Contract delivers to NJPA Members, the scope of NJPA Membership, and the authority of NJPA Members to utilize NJPA procurement contracts.

5.1.4.2 Your Sales Management will be needed to provide training regarding employee compensation and internal procedures when delivering the Contract opportunity, and how this Contract purchasing opportunity relates with other such opportunities available.

5.2 Success in marketing is dependent upon 1) the delivery of value as defined in section 1.4, 2) the delivery of knowledge of the contract and its proper use and utility, and 3) the delivery of the contracted products/equipment and related services and the sales reward which creates a personal commitment to the contract. NJPA desires a marketing plan that:

5.2.1 identifies the value to a member of a delivered a competitively proposed national cooperative procurement contract that reduces the need by both the NJPA Member and the Vendor/Vendor's sales staff of the responsibility to facilitate and responding to multiple and similar individual RFP's;

5.2.2 identifies the appropriate Vendor personnel from both management and sales staff who will be trained on the sales and marketing methods, strategy, use and utility of such a contract and a general schedule of when and how those individuals will be trained; and

5.2.3 identifies in general how the reward system for the marketing, delivery, and service chain of the Vendor will be affected by the implementation of the proposed Contract and how that will be proposed to those individuals in terms of the value created for them and their departments in 5.1.1 above.

5.3 External Marketing Plan: NJPA is seeking the ability to serve all our current and potential members nationwide. The Proposer must demonstrate the ability to both market and service their products/equipment and related services to NJPA current and potential members nationwide. As a part of your Marketing Plan, demonstrate your sales and service network and the capability to staff, communicate and offer the contract opportunity while demonstrating your commitment to serving NJPA and NJPA Members nationwide through the awarded contract.

5.4 The Proposer must exhibit the willingness and ability to develop marketing materials and participate in marketing venues such as:

5.4.1 Printed Marketing Materials. Proposer will initially produce and thereafter maintain full color print advertisements in camera ready electronic format including company logos, identifying the Vendor, the Vendor's general utility for NJPA and NJPA Members, and contact information to be used by NJPA and NJPA Members in a full page, half page, and quarter page formats. These advertisements will be used in the NJPA directory and other marketing publications.

5.4.2 Contract announcements and advertisements. Proposer will identify a marketing plan identifying their anticipated contract announcements, advertisements in industry periodicals, or other direct or indirect marketing activities.

5.4.3 Proposer's Website. Proposer will identify how an Awarded Contract will be displayed on the Proposer's website. An on-line shopping experience for NJPA and NJPA Members is desired when applicable and will be viewed as a value-added attribute to a Proposer's Response.

5.4.4 Trade Shows. Proposer will outline their proposed involvement in the promotion of a Contract resulting from this RFP through applicable trade shows. Proposers are encouraged to identify tradeshows and other appropriate venues for the promotion of any such Contract. Proposers are encouraged to consider participation with NJPA at NJPA embraced national trade shows. Examples of such could include:

NAEP	National Association of Education Procurement
I-ASBO	International Association of School Business Officials
NIGP	National Institute of Government Purchasing

5.5 Proposer must also work in cooperation with NJPA to develop a marketing strategy and provide avenues to equally market and drive sales through the Contract and program to all NJPA Members nationally. Awarded Vendor agrees to actively market in cooperation with NJPA all contracted equipment/products and services to current and potential NJPA Members. NJPA reserves the right to deem a Proposer non-responsive or to waive an award based on an unacceptable marketing plan.

5.6 As a part of this response, submit a complete Marketing Plan on how you would help NJPA roll out this program to current and potential NJPA Members. NJPA requires the Awarded Vendors actively promote the Contract in cooperation with the NJPA. Proposers are advised to consider marketing efforts in the areas of 1) Website Link from Proposer's website to NJPA's website, 2) Attendance and participation with a display booth at national and regional trade shows and meetings when the event is applicable to the Proposer's customer vertical, and 3) Sales team and sales training programs involving both Proposer's sales management and NJPA staff.

5.7 Facilitating NJPA Membership: Proposer should express their commitment to develop a process to establish membership status of current and potential agencies with NJPA as a part of the sales or customer communication process.

5.7.1 Membership information: Proposer should further express their commitment to capturing sufficient member information as is deemed necessary by NJPA to appropriately facilitate membership.

6. PROPOSAL OPENING PROCEDURE

6.1 Sealed and properly identified Proposer's Responses for this RFP entitled **"FLEET MANAGEMENT AND RELATED TECHNOLOGY SOLUTIONS"** will be received by Gregg Meierhofer, Manager of Bids and Contracts, at NJPA Offices, 202 12th Street NE, Staples, MN 56479 until the deadline for receipt of, and proposal opening identified on page one of this RFP**. We document the receipt by using an atomic clock; an NJPA employee electronically time and date stamps all Proposals immediately upon receipt.** The NJPA Director of Contracts and Marketing, or Representative from the NJPA Proposal Evaluation Committee, will then read the Proposer's names aloud. A summary of the responses to this RFP will be made available for public inspection in the NJPA office in Staples, MN. A letter or e-mail request is required to receive a complete RFP package. Send or communicate all requests to the attention of Gregg Meierhofer 202 12th Street Northeast Staples, MN 56479 or RFP@njpacoop.org to receive a complete copy of this RFP. Method of delivery needs to be indicated in

the request; an email address is required for electronic transmission. Oral, facsimile, telephone or telegraphic Proposal Submissions or requests for this RFP are invalid and will not receive consideration. All Proposal Responses must be submitted in a sealed package. The outside of the package shall plainly identify **"FLEET MANAGEMENT AND RELATED TECHNOLOGY SOLUTIONS"** To avoid premature opening, it is the responsibility of the Proposer to label the Proposal Response properly.

7. EVALUATION OF PROPOSALS

A. PROPOSAL EVALUATION PROCESS

7.1 Overall Evaluation (FORM G) - The NJPA Proposal Evaluation Committee will evaluate proposals received based on a 1,000 point evaluation system. The Committee will establish both the evaluation criteria and designate the relative importance of those criteria by assigning possible scores for each category.

7.2 NJPA will use a 1,000 Point Evaluation System to help determine the best overall Proposer(s) selection. Bonus points may be available for specific proposal characteristics identified such as "Green Product Certifications."

7.2.1. Bonus Evaluation Points- Bonus evaluation points may be awarded by the NJPA Proposal Evaluation Committee based on criteria identified as being both "optional" and "having additional value."

7.3 NJPA shall use a final overall scoring system to include consideration for best price and cost evaluation. The total possible score is 1,000 points. NJPA reserves the right to assign any number of point awards or penalties it considers warranted if a Proposer stipulates exceptions, exclusions, or limitations of liabilities.

7.4 Responses will be evaluated first for responsiveness and thereafter for content. The NJPA Board of Directors will make awards to the selected Proposer(s) based on the recommendations of the Proposal Evaluation Committee.

7.5 To qualify for the final evaluation, a Proposer must have been deemed responsive as a result of the criteria set forth under "Proposer Responsiveness."

7.6 NJPA uses a variety of evaluation methodologies, including but not limited to a cost comparison of specific and deemed to be like equipment/products. These processes establish final points for submitted price levels.

7.7 The procurement activities of the NJPA Proposal Evaluation Committee are limited to document preparation, answering Proposer questions, advertising the solicitation, distribution of this RFP upon request, conducting an evaluation and making recommendation for possible approval to NJPA Board of Directors.

B. PROPOSER RESPONSIVENESS

7.8 Proposer's Response received after the deadline for submission will be invalid and returned to the Potential Proposer unopened.

7.9 An essential part of the proposal evaluation process is an evaluation to qualify the Proposer being considered. All proposals must contain answers or responses to the information requested in the proposal forms. Any Proposer failing to provide the required documentation may be considered non-responsive.

7.10 Deviations or exceptions stipulated in Proposer's Response may result in the proposal being classified as non-responsive.

7.11 To qualify for evaluation, a proposal must have been submitted on time and materially satisfy all mandatory requirements identified in this document. A proposal must reasonably and substantially conform to all the terms and conditions in the solicitation to be considered responsive.

7.12 The Proposal Evaluation Committee shall utilize the following criteria to evaluate all proposals received. Items 1-4 constitute the test for "Level One Responsiveness" and are determined on the proposal opening date. "Level 2" responsiveness is determined through the evaluation of the remaining items listed under Proposal Evaluation Criteria. These items are not arranged in order of importance and each item may encompass multiple areas of information requested.

1. The proposal response is received prior to the deadline for submission.
2. The proposal package was properly addressed and identified as a sealed proposal with a specific opening date and time.
3. The proposal response contains the required certificate of liability insurance.
4. The proposal response contains original signatures on all documents requiring such.

C. PROPOSAL EVALUATION CRITERIA

7.13 Reduction of Evaluation Points. The following items will be sufficient cause to reduce evaluation points.

7.13.1 If a manufacturer or supplier chooses not to produce or supply a full selection and representation of product/equipment and related services it has available which fall within the scope of this RFP, such action will be considered sufficient cause to reduce evaluation points.

7.14 Evaluation Criteria

7.15 Evaluation of each Proposer's Response will take into consideration as a minimum response but not necessarily limited to the following:

1. Adherence to all requirements of this RFP as defined by industry standards.
2. Prior knowledge of and experience with a Proposer in terms of past performance and market place success.
3. Capability of meeting or exceeding current and future needs or requirements of NJPA and NJPA Members.
4. Evaluation of Proposer's ability to market to and provide service to all NJPA Members nationally.
5. Financial condition of the Proposer.
6. Nature and extent of company data furnished in Proposer's Response.
7. Quality of products, equipment, and services offered including value added related services.
8. History of member service to NJPA type customers.
9. Overall ability to perform sales, solutions and contract support as submitted.
10. Ability to meet service and warranty needs.
11. History of meeting shipping and delivery expectations of contracted products/ services.
12. Technology advancements and related provisions.
13. Ability to market and promote the Contract within current business practices.
14. Willingness to develop and enter into NJPA Contract and business relations.
15. Favorable bond rating and applicable industry standard licensing ability.
16. Past market place successes and brand recognition.
17. Demonstrated warranty and product/service responsibility.
18. Possesses qualifications as a responding Proposer that meets or exceeds those set within the solicitation.
19. Information from government and education references and past performance information including past agency approval.
20. Demonstrates that they offer the most current industry standard equipment/products and related services and/or services.

21. Demonstrates financial stability as a company and a favorable banking line of credit.
22. Demonstrates their equipment/products and related services proposed meet and/or exceed industry standards accepted by educational or governmental agencies nationally.
23. Demonstrates market place success and their past performance exhibits an acceptable reputation nationally within the government and education market place.
24. Demonstrates that the company possesses the background, knowledge, capacity, and ability to sell, deliver, and support equipment/products and related services offered to government and education and related agencies.
25. Response's conformance to terms and conditions as described in the solicitation, including documentation.
26. Has provided documentation defining, outlining, and describing their concept of a national marketing program they will be implementing to facilitate and coordinate the cooperative activities required by an awarded NJPA Contract.
27. Has provided all of the required and applicable documentation required i.e. insurance certificates, licenses, and/or registration certificates required to do business nationally.
28. Line-Item Pricing, or acceptable pricing model in approved excel format, listing of all of the proposed equipment/products and related services and warranty provisions with their associated units of costs.
29. Hot List Pricing equipment/products and related services in a Line-Item Pricing format (when applicable).
30. Contract Pricing submitted as requested to include selection of products/equipment and related services in a Line-Item Pricing and/or Percentage Discount from a published gov/ed price list or Catalog.

D. OTHER CONSIDERATION

7.16 Consideration will be given in the award based on the completion and degree of information provided regarding available products/equipment, and accessories, and related services as well as, applicable parts of the Proposer Information and Questionnaire.

7.17 The Proposer is required to have extensive knowledge and at least three (3) years of experience with the related activities surrounding the selling of the product/equipment, related services or related products/equipment offered.

7.18 NJPA reserves the right to accept or reject newly formed companies solely based on information provided in the proposal and/or its own investigation of the company.

7.19 The fact a manufacturer or supplier chooses not to produce or provide equipment products or services to meet the intent and scope of this RFP will not be considered sufficient cause to adjudge this RFP as restrictive.

7.20 Consideration will be given in the proposal evaluation based upon the selection, variety, technological advances, and demonstrated quality of products submitted, technological advances, and pricing. A positive review will reflect the ability of the Proposer to communicate the value of these factors and to demonstrate how the depth and breadth of their product and service offerings provide NJPA and NJPA Members comfort and assurance understanding that the proposer accepts the sole source of responsibility of the response to the scope of this RFP.

7.21 Consideration will also be given to proposals demonstrating technological advances, provide increased efficiencies, expanded service and other related improvements beyond today's NJPA member's needs and applicable standards.

7.22 Strong consideration will be given to a Proposer's past performance, distribution model, and the demonstration their ability to effectively market and service NJPA Membership nationally.

7.23 Strong consideration will be given to the best price as it relates to the quality of the product and service. However, price is ultimately only one of the factors taken into consideration in the evaluation and award.

7.24 The Proposer's ability to follow the proposal preparation instructions set forth in this solicitation will also be considered to be an indicator of the Proposer's ability to follow other future instructions should they receive an award as a result of this solicitation. Any Contract between NJPA and a Proposer requires the delivery of information and data. The quality of organization and writing reflected in the proposal will be considered an indication of the quality of organization and writing which would be prevalent if a Contract was awarded. As a result, the proposal will be evaluated as a sample of data submission.

7.25 Proposer's audited financial statements from previous year end (or an unaudited copy if an audited copy is not available). The Proposer's audited financial statements from previous year end (or an unaudited copy if an audited copy is not available) are requested and reviewed to get a general feel for the size, strength, and probable scope of the Proposer.

7.26 NJPA reserves the right to reject the Proposer's Response of the apparent successful Proposer where the available evidence or information does not exhibit the ability or intent to satisfy NJPA that the potential Vendor is unable to properly carry out the terms of this RFP and potential Contract.

7.27 NJPA shall reserve the right to reject any or all proposals. NJPA also reserves the right to reject a proposal not accompanied by required certificate of insurance, other data required by this RFP, or if a Proposer's Response is incomplete or irregular. The NJPA shall reject all proposals where there has been proven or suspicion of collusion among the Proposers.

E. COST COMPARISON

7.28 NJPA reserves the right to use this process in the event the Proposal Evaluation Committee feels it is necessary to make a final determination.

7.29 This process will be based on a point system with points being awarded for being low to high Proposer for each cost evaluation item selected. A "Market Basket" of identical (or substantially similar) equipment/products and related services may be selected by the NJPA Evaluation Committee and the unit cost will be used as a basis for determining the point value. The "Market Basket" will be selected by NJPA from all product categories as determined appropriate by NJPA. The low priced Proposer will receive the full point value and all other Proposers will receive points as follows: Lowest price Proposal = 5 (where there are five proposers), and inferior proposals = 4, 3, 2, 1 points each. The Total Score for each proposer will be the sum of all points earned. The result of this process shall not be the sole determination for award.

F. PRODUCT TESTING

7.30 NJPA reserves the right to request and test equipment/products and related services from the apparent successful Proposer. Prior to the award of the Contract, the apparent successful Proposer, if requested by NJPA, shall furnish current information and data regarding the Proposer's resources, personnel, and organization within three (3) days.

G. PAST PERFORMANCE INFORMATION

7.31 Past performance information is relevant information regarding a Proposer's actions under previously awarded contracts to schools, local, state, and governmental agencies and non-profit agencies. It includes the Proposer's record of conforming to specifications and standards of good workmanship. The Proposer's history for reasonable and cooperative behavior and commitment to member satisfaction shall be under evaluation. Ultimately, Past Performance Information can be defined as the Proposer's

businesslike concern for the interests of the NJPA Member.

H. WAIVER OF FORMALITIES

7.32 NJPA reserves the right to waive any minor formalities or irregularities in any proposal and to accept proposals, which, in its discretion and according to the law, may be in the best interest of its members.

8. POST AWARD OPERATING ISSUES

A. SUBSEQUENT AGREEMENTS

8.1 Purchase Order- Purchase Orders for product/equipment and related services may be executed between NJPA or NJPA Members (Purchaser) and awarded Vendor(s) or Vendor's sub-contractors pursuant to this invitation and any resulting Contract. NJPA Members are instructed to identify on the face of such Purchase orders that "This purchase order is issued pursuant to NJPA procurement contract #XXXXXX." A Purchase Order is an offer to purchase product/equipment and related services at specified prices by NJPA or NJPA Members pursuant to a Contract resulting from this RFP. Purchase Order flow and procedure will be developed jointly between NJPA and an Awarded Vendor after an award is made.

8.2 Governing Law- Purchase Orders, as identified above, shall be construed in accordance with, and governed by, the laws of a competent jurisdiction with respect to the purchaser. Each and every provision of law and clause required by law to be included in the Purchase Order shall be read and enforced as though it were included. If through mistake or otherwise any such provision is not included, or is not currently included, then upon application of either part the Contract shall be physically amended to make such inclusion or correction. The venue for any litigation arising out of disputes related to Purchase Order(s) shall be a court of competent jurisdiction to the Purchaser.

8.3 Additional Terms and Conditions- Additional terms and conditions to a Purchase Order may be proposed by NJPA, NJPA Members, or Vendors. Acceptance of these additional terms and conditions is OPTIONAL to all parties to the Purchase Order. The purpose of these additional terms and conditions is to, among other things; formally introduce job or industry specific requirements of law such as prevailing wage legislation. Additional terms and conditions can include specific local policy requirements and standard business practices of the issuing Member. Said additional terms and conditions shall not interfere with the general purpose, intent or currently established terms and conditions contain in this RFP document.

8.4 Specialized Service Requirements- In the event service requirements or specialized performance requirements such as e-commerce specifications, specialized delivery requirements, or other specifications and requirements not addressed in the Contract resulting from this RFP, NJPA Member and Vendor may enter into a separate, standalone agreement, apart from a Contract resulting from this RFP. Any proposed service requirements or specialized performance requirements require pre-approval by Vendor. Any separate agreement developed to address these specialized service or performance requirements is exclusively between the NJPA Member and Vendor. NJPA, its agents, Members and employees shall not be made party to any claim for breach of such agreement. Product sourcing is not considered a service. NJPA Members will need to conduct procurements for any specialized services not identified as a part or within the scope of the awarded Contract.

8.5 Performance Bond- At the request of the member, a Vendor will provide all performance bonds typically and customarily required in their industry. These bonds will be issued pursuant to the requirements of Purchase Orders for product/equipment and related services. If a purchase order is cancelled for lack of a required performance bond by the member agency, it shall be the recommendation of NJPA that the current pending Purchase Order be canceled. Each member has the final decision on Purchase Order continuation. ANY PERFORMANCE BONDING REQUIRED BY THE MEMBER OR

CUSTOMER STATE LAWS OR LOCAL POLICY IS TO BE MUTUALLY AGREED UPON AND SECURED BETWEEN THE VENDOR AND THE CUSTOMER/MEMBER.

B. NJPA MEMBER SIGN-UP PROCEDURE

8.6 Awarded Vendors will be responsible for familiarizing their sales and service forces with the various forms of NJPA Membership documentation and shall encourage and assist potential Members in establishing Membership with NJPA. NJPA membership is at no cost, obligation or liability to the member or the vendor.

C. REPORTING OF SALE ACTIVITY

8.7 A report of the total gross dollar volume of all equipment/products and related services purchased by NJPA Members as it applies to this RFP and Contract will be provided quarterly to NJPA. The form and content of this reporting will be developed by NJPA in cooperation with the Vendor to include, but not limited to, name and address of purchasing agency, amount of purchase, and a description of the items purchased.

8.7.1 Zero sales reports: Awarded Vendors are responsible for providing a quarterly sales report of contract sales EVERY QUARTER regardless of the existence or amount of sales.

D. AUDITS

8.8 During the Term, however no more than once per calendar year, Vendor(s) may be required to make available to NJPA at the Vendor's corporate offices (during normal business hours) the invoice reports and/or invoice documents from Vendor pertaining to all invoices sent by Vendor and all payments made by NJPA members for all equipment/products and related services purchased under the awarded Contract. NJPA must provide written notice of exercise of this requirement with no less than fourteen (14) business days' notice. NJPA may employ an independent auditor or NJPA may choose to conduct such audit on its own behalf. Vendor shall have the right to approve the independent auditor, which approval shall not be unreasonably withheld. Upon approval and after the auditor has executed an appropriate confidentiality agreement, Vendor will permit the auditor to review the relevant Vendor documents. NJPA shall be responsible for paying the auditor's fees. The parties will make every reasonable effort to fairly and equitably resolve discrepancies to the satisfaction of both parties. Vendor agrees that the NJPA may audit their records with a reasonable notice to establish total compliance and to verify prices charged hereunder of the Contract are being met. Vendor agrees to provide verifiable documentation and tracking in a timely manner.

E. HUB PARTNER

8.9 Hub Partner: Where applicable, NJPA Members may, from time to time, request to be served in some way through a "Hub Partner" for the purposes of complying with a Law, Regulation, or Rule to which that individual NJPA Member deems to be applicable in their jurisdiction. Hub Partners may bring value to the proposed transactions through consultancy, Disadvantaged Business Entity Credits, or other considerations.

8.10 Hub Partner Fees: Fees, costs, or expenses from this Hub Partner levied upon a transaction resulting from this contract, shall be payable by the NJPA Member provide that:

8.10.1 The fees, costs, or expenses levied by the Hub Vendor must be clearly itemized in the transaction; and

8.10.2 To the extent that the Vendor stands in the chain of title during a transaction resulting from this RFP, the documentation shall be documented to show it is "Executed for the Benefit of

[NJPA Member Name]."

F. TRADE-INS

8.11 Where Appropriate, the value in US Dollars for Trade-ins will be negotiated between NJPA or an NJPA Member, and an Awarded Vendor. That identified "Trade-In" value shall be credited in full against the NJPA purchase price identified in a purchase order issued pursuant to any Awarded NJPA procurement contract. The full value of the trade-in will be consideration to that purchase order.

G. OUT OF STOCK NOTIFICATION

8.12 Vendor shall immediately notify NJPA members upon receipt of order(s) when an out-of-stock occurs. Vendor shall inform the NJPA member regarding the anticipated date of availability for the out-of-stock item(s), and may suggest equivalent substitute(s).

- The ordering organization shall have the option of accepting the suggested equivalent substitute, or canceling the item from the order.
- Under no circumstance is Proposer permitted to make unauthorized substitutions.
- Unfilled or substituted item(s) shall be indicated on the packing list.

H. TERMINATION OF CONTRACT RESULTING FROM THIS RFP

8.13 NJPA reserves the right to cancel the whole or any part of a resulting Contract due to failure by the Vendor to carry out any obligation, term or condition as described in the below procedure. Prior to any termination for cause, the NJPA will provide written notice to the Vendor, opportunity to respond and opportunity to cure according to the steps in the procedure in this Cancellation Section. Some examples of material breach are the following:

- The Vendor provides products/equipment or related services that does not meet reasonable quality standards and is not remedied under the warranty;
- The Vendor fails to ship the products/equipment or related services or provide the delivery and services within a reasonable amount of time;
- NJPA has reason to believe the Vendor will not or cannot perform to the requirements or expectations of the Contract and issues a request for assurance as described herein and Vendor fails to respond;
- The Vendor fails to observe any of the material terms and conditions of the Contract;
- The Vendor fails to follow the established procedure for purchase orders, invoices and/or receipt of funds as established by the NJPA and the Vendor in the Contract.
- The Vendor fails to report quarterly sales ;
- The Vendor fails to actively market this Contract within the guidelines provided in this RFP and the expectations of NJPA defined in the NJPA Contract Launch.
- In the event the contract has no measurable and defining value or benefit to NJPA or the NJPA member.

8.14 Each party shall follow the below procedure if the Contract is to be terminated for violations or non-performance issues:

Step 1: Issue a warning letter outlining the violations and/or non-performance and state the length of time (10 days) to provide a response and correct the problem(s) if reasonably possible in such time frame.
Step 2: Issue a letter of intent to cancel Contract, if the problem(s) is not resolved within fifty (50) days.
Step 3: Issue letter to cancel Contract for cause.

8.15 Upon receipt of the written notice of concern, the Vendor shall have ten (10) business days to

provide a satisfactory response to the NJPA. Failure on the part of the Vendor to reasonably address all issues of concern may result in Contract cancellation pursuant to this Section.

8.16 Any termination shall have no effect on purchases that are in progress at the time the cancellation is received by the NJPA. The NJPA reserves the right to cancel the Contract immediately for convenience, without penalty or recourse, in the event the Vendor is not responsive concerning the remedy, the performance, or the violation issue within the time frame, completely or in part.

8.17 NJPA reserves the right to cancel or suspend the use of any Contract resulting from this RFP if the Vendor files for bankruptcy protection or is acquired by an independent third party. Prior to commencing services under this Contract, the Proposer/Vendor must furnish NJPA certification from insurer(s) proving level of coverage usual and customary to the specific industry. The coverage is to be maintained in full effect during the Contract period. Vendor must be willing to provide, upon request, certification of insurance to any NJPA member or member using this Contract.

8.18 Either party may execute Contract termination without cause with a required 60-day written notice of termination. Termination of Contract shall not relieve either party of financial, product or service obligations incurred or accrued prior to termination.

8.19 NJPA may cancel any Contract resulting from this solicitation without any further obligation if any NJPA employee significantly involved in initiating, negotiating, securing, drafting or creating the Contract on behalf of the NJPA is found to be in collusion with any Proposer to this RFP for their personal gain. Such cancellation shall be effective upon written notice from the NJPA or a later date if so designated in the notice given. A terminated Contract shall not relieve either party of financial, product or service obligations due to participating member or NJPA.

8.20 Events of Automatic termination to include:

- Vendor's failure to remedy a material breach of a Contract resulting from this RFP within sixty (60) days of receipt of notice from NJPA specifying in reasonable detail the nature of such breach; and/or,
- Receipt of written information from any authorized agency finding activities of Vendors engaged in pursuant to a Contract resulting from this RFP to be in violation of the law.

9. GENERAL TERMS AND CONDITIONS

A. ADVERTISEMENT OF RFP

9.1 As a policy, NJPA shall advertise this solicitation 1) for two consecutive weeks in both the hard copy print and on-line editions of the MINNEAPOLIS STAR TRIBUNE, 2) for two consecutive weeks in both the hard copy print and on-line editions of Oregon's Daily Journal of Commerce, 3) it shall be placed on a national wire service and website by the MINNEAPOLIS STAR TRIBUNE, 4) it shall be posted on NJPA's website, 5) it shall be posted to the "Noticetobidders.com" website, and 6) it shall be posted to other third-party websites deemed appropriate by NJPA. Other third party advertisers may include Onvia and Bidsync.

NJPA also notifies and provides solicitation documentation to each State level procurement departments for possible re-posting of the solicitation within their systems and at their option for future use and to meet specific state requirements.

B. ADVERTISING OF A CONTRACT RESULTING FROM THIS RFP

9.2 Proposer/Vendor shall not advertise or publish information concerning this Contract prior to the award being announced by the NJPA. Once the award is made, a Vendor is expected to advertise the awarded Contract to both current and potential NJPA Members.

C. APPLICABLE LAW

9.3 NJPA Compliance with Minnesota Procurement Law: Contracts awarded through NJPA are intended to meet the procurement laws of all states and NJPA will exhaust all avenues to comply with each unique state law or requirement whenever possible. It is the responsibility of each participating NJPA member to ensure to their satisfaction that NJPA contracting process falls within these laws and applicable laws are satisfied. An individual NJPA member using these contracts is deemed by their own accord to be in compliance with their own requirements and procurement regulations.

9.4 Governing Law with respect to delivery and acceptance: All applicable portions of the Minnesota Uniform Commercial Code, all other applicable Minnesota laws, and the applicable laws and rules of delivery and inspection of the Federal Acquisition Regulations (FAR) laws shall govern NJPA contracts resulting from this solicitation.

9.5 Jurisdiction: Any claims pertaining to this RFP and any resulting Contract that develop between NJPA and any other party must be brought forth only in courts in Todd County in the State of Minnesota.

9.5.1 Purchase Orders issued pursuant to a contract resulting from this solicitation shall be construed in accordance with, and governed by, the laws of a competent jurisdiction with respect to the purchaser.

9.6 Vendor Compliance with applicable law: Vendor(s) shall comply with all federal, state, or local laws applicable to or pertaining to the transaction, acquisition, manufacturer, suppliers or the sale of the equipment/products and relating services resulting from this RFP.

9.7 Applicable Laws, whether or not herein contained, shall be included by this reference. It shall be Proposer's/Vendor's responsibility to determine the applicability and requirements of any such laws and to abide by them.

9.8 Indemnity: Each party agrees it will be responsible for its own acts and the result thereof to the extent authorized by law and shall not be responsible for the acts of the other party and the results thereof. NJPA's liability shall be governed by the provisions of the Minnesota Tort Claims Act, Minnesota Statutes, Section §3.736, and other applicable law.

9.9 Prevailing Wage: It shall be the responsibility of the Vendor to comply, when applicable, with prevailing wage legislation in effect in the jurisdiction of the purchaser (NJPA or NJPA Member). It shall be the responsibility of the Vendor to monitor the prevailing wage rates as established by the appropriate department of labor for any increase in rates during the term of this Contract and adjust wage rates accordingly.

9.10 Patent and Copyright infringement: If an article sold and delivered to NJPA or NJPA Members hereunder shall be protected by any applicable patent or copyright, the Vendor agrees to indemnify and save harmless NJPA and NJPA Members against any and all suits, claims, judgments, and costs instituted or recovered against it by any person whosoever on account of the use or sale of such articles by NJPA or NJPA Members in violation or right under such patent or copyright.

D. ASSIGNMENT OF CONTRACT

9.11 No right or interest in this Contract shall be assigned or transferred by the Vendor without prior written permission by the NJPA. No delegation of any duty of the Vendor shall be made without prior written permission of the NJPA. The NJPA shall notify the members within fifteen (15) days of receipt of written notice by the Vendor. After issuance the awarded Contract may be reassigned to a comparable and acceptable Vendor at the discretion of NJPA.

9.12 If the original Vendor sells or transfers all assets or the entire portion of the assets used to perform this Contract, a successor in interest must guarantee to perform all obligations under this Contract. NJPA reserves the right to reject the acquiring person or entity as a Vendor. A simple change of name agreement will not change the contractual obligations of the Vendor.

E. LIST OF PROPOSERS

9.13 NJPA will not maintain or communicate to a list of proposers. All interested proposers must respond to the solicitation as a result of NJPA solicitation advertisements indicated. Because of the wide scope of the potential Members and qualified national Vendors, NJPA has determined this to be the best method of fairly soliciting proposals.

F. CAPTIONS, HEADINGS, AND ILLUSTRATIONS

9.14 The captions, illustrations, headings, and subheadings in this solicitation are for convenience and ease of understanding and in no way define or limit the scope or intent of this request.

G. DATA PRACTICES

9.15 All materials submitted in response to this RFP will become property of the NJPA and will become public record in accordance with Minnesota Statutes, section 13.591, after the evaluation process is completed. If the Responder submits information in response to this RFP that it believes to be confidential information, as defined by the Minnesota Government Data Practices Act, Minnesota Statute § 13.37, the Responder must:

- clearly mark all confidential information in its response at the time the response is submitted,
- include a statement with its response justifying the confidential information designation for each item, and
- defend any action seeking release of the materials it believes to be confidential information, and indemnify and hold harmless the NJPA, its agents and employees, from any judgments or damages awarded against the NJPA in favor of the party requesting the materials, and any and all costs connected with that defense.

This indemnification survives the NJPA's award of a contract. In submitting a response to this RFP, the Responder agrees that this indemnification survives as long as the confidential information are in possession of the NJPA. Proposer can redact additional confidential information at any time after the evaluation process if appropriate legal justification is provided.

H. ENTIRE AGREEMENT

9.16 The Contract, as defined herein, shall constitute the entire understanding between the parties to that Contract.

9.17 A Contract resulting from this RFP is formed when the NJPA Board of Directors approves and signs the applicable Contract Award Form document (see Form E).

I. FORCE MAJEURE

9.18 Except for payments of sums due, neither party shall be liable to the other nor deemed in default under this Contract if and to the extent that such party's performance of this Contract is prevented due to force majeure. The term "force majeure" means an occurrence that is beyond the control of the party affected and occurs without its fault or negligence including, but not limited to, the following: acts of God, acts of the public enemy, war, riots, strikes, mobilization, labor disputes, civil disorders, fire, flood, snow, earthquakes, tornadoes or violent wind, tsunamis, wind shears, squalls, Chinooks, blizzards, hail

storms, volcanic eruptions, meteor strikes, famine, sink holes, avalanches, lockouts, injunctions-intervention-acts, terrorist events or failures or refusals to act by government authority and/or other similar occurrences where such party is unable to prevent by exercising reasonable diligence. The force majeure shall be deemed to commence when the party declaring force majeure notifies the other party of the existence of the force majeure and shall be deemed to continue as long as the results or effects of the force majeure prevent the party from resuming performance in accordance with a Contract resulting from this RFP. Force majeure shall not include late deliveries of equipment/products and services caused by congestion at a manufacturer's plant or elsewhere, an oversold condition of the market, inefficiencies, or other similar occurrences. If either party is delayed at any time by force majeure, then the delayed party shall notify the other party of such delay within forty-eight (48) hours.

J. GRATUITIES

9.19 NJPA may cancel an awarded Contract by written notice if it is found that gratuities, in the form of entertainment, gifts or otherwise, were offered or given by the Vendor or any agent or representative of the Vendor, to any employee of the NJPA are deemed to be excessive with a view or demonstrated intent toward securing a contract or with respect to the performance of a pending or awarded Contract.

K. HAZARDOUS SUBSTANCES

9.20 Proper and applicable Material Safety Data Sheets (MSDS) that are in full compliance with OSHA's Hazard Communication Standard must be provided by the Vendor to NJPA or NJPA Member at the time of purchase.

L. LEGAL REMEDIES

9.21 All claims and controversies between NJPA and Vendor shall be subject to the laws of the State of Minnesota and are to be resolved in Todd County, Minnesota, the county in which NJPA is located and domiciled.

M. LICENSES

9.22 Proposer shall maintain a current status on all required federal, state, and local licenses, bonds and permits required for the operation of the business that is anticipated to be conducted with NJPA and NJPA members by the Proposer.

9.23 All responding Proposers must be licensed (where required) and have the authority to sell and distribute offered equipment/products and related services to NJPA and NJPA Members nationally. Documentation of required said licenses and authorities, if applicable, is requested to be included in the proposer's response.

N. MATERIAL SUPPLIERS AND SUB-CONTRACTORS

9.24 The awarded Vendor shall be required to supply the names and addresses of sourcing suppliers and sub-contractors as a part of the purchase order when requested by NJPA or the NJPA member.

9.25 Awarded Vendors under this RFP will be the sole source of responsibility for transactions originating that award. The Awarded Vendor is solely responsible for equipment/products and related services and products/equipment and related services provided by third-party sourcing or service providers.

0. NON-WAIVER OF RIGHTS

9.26 No failure of either party to exercise any power given to it hereunder, nor to insistence upon strict

compliance by the other party with its obligations hereunder, and no custom or practice of the parties at variance with the terms hereof, nor any payment under a Contract resulting from this RFP shall constitute a waiver of either party's right to demand exact compliance with the terms hereof. Failure by NJPA to take action or assert any right hereunder shall not be deemed as waiver of such right.

P. PROTESTS OF AWARDS MADE

9.27 Protests shall be filed with the NJPA's Executive Director and shall be resolved in accordance with appropriate Minnesota state statutes. Protests will only be accepted from Proposers. A protest must be in writing and filed with NJPA. A protest of an award or proposed award must be filed within ten (10) days after the public notice or announcement of the award. No protest shall lie for a claim that the selected Proposer is not a responsible Proposer. A protest must include:

1. The name, address and telephone number of the protester;
2. The original signature of the protester or its representative (you must document the authority of the Representative);
3. Identification of the solicitation by RFP number;
4. Identification of the statute or procedure that is alleged to have been violated;
5. A precise statement of the relevant facts;
6. Identification of the issues to be resolved;
7. The aggrieved party's argument and supporting documentation;
8. The aggrieved party's statement of potential financial damages;
9. A protest bond in the name of NJPA and in the amount of 10% of the aggrieved party's statement of potential financial damages.

Q. PROVISIONS REQUIRED BY LAW

9.28 Proposer agrees in the performance of a Contract resulting from this RFP, it has complied with or will comply with all applicable statutes, laws, regulations, and orders of the United States and any State thereof.

R. RIGHT TO ASSURANCE

9.29 Whenever one party to the awarded Contract has reason to question the other party's intent to perform, he/she may demand a written assurance of this intent. In the event a demand is made and no written assurance is given, the demanding party may treat this failure as an anticipatory repudiation of the Contract provided, however, in order to be effective, any such demand shall be addressed to the authorized signer for the party from whom the assurance is being sought, and sent via U.S. Postal Service, certified mail, return receipt requested or national overnight delivery service with proof of delivery.

S. SUSPENSION OR DISBARMENT STATUS

9.30 If within the past five (5) years, any firm, business, person or Proposer responding to NJPA solicitation and submitting a proposal has been lawfully terminated, suspended or precluded from participating in any public procurement activity with a federal, state or local government or education agency the Proposer must include a letter with its response setting forth the name and address of the public procurement unit, the effective date of the suspension or debarment, the duration of the suspension or debarment and the relevant circumstances relating to the suspension or debarment. Any failure to supply such a letter or to disclose pertinent information may result in the cancellation of any Contract. By signing the proposal affidavit, the Proposer certifies that no current suspension or debarment exists.

T. AFFIRMATIVE ACTION AND IMMIGRATION STATUS CERTIFICATION

9.31 An Affirmative Action Plan, Certificate of Affirmative Action or other documentation regarding Affirmative Action may be required by certain Members may be required by NJPA or NJPA Members

relating to a transaction relating to this RFP. Vendors shall comply with any such requirements or requests.

9.32 Immigration Status Certification may be required by NJPA or NJPA Members relating to a transaction relating to this RFP. Vendors shall comply with any such requirements or requests.

U. SEVERABILITY

9.33 In the event that any of the terms of a Contract resulting from this RFP are in conflict with any rule, law, statutory provision or are otherwise unenforceable under the laws or regulations of any government or subdivision thereof, such terms shall be deemed stricken from an awarded Contract resulting from this RFP, but such invalidity or unenforceability shall not invalidate any of the other terms of an awarded Contract resulting from this RFP.

V. RELATIONSHIP OF PARTIES

9.34 No Contract resulting from this RFP shall be considered a contract of employment. The relationship between NJPA and an Awarded Contractor is one of independent contractors each free to exercise judgment and discretion with regard to the conduct of their respective businesses. The parties do not intend the proposed Contract to create, or is to be construed as creating a partnership, joint venture, master-servant, principal–agent, or any other relationship. Except as provided elsewhere in this RFP, neither party may be held liable for acts of omission or commission of the other party and neither party is authorized or has the power to obligate the other party by contract, agreement, warranty, representation or otherwise in any manner whatsoever except as may be expressly provided herein.

10. FORMS

[THE REST OF THIS PAGE WAS LEFT INTENTIONALLY BLANK. FORMS BEGIN ON NEXT PAGE]

Form A

PROPOSER QUESTIONNAIRE- General Business Information

*(Products, Pricing, Sector Specific, Services, Terms and Warranty are addressed on **Form P**)*

Proposer Name: _____

Questionnaire completed by: _____

Please provide an answer to all questions below and address all requests made in this RFP. Please use the Microsoft Word/Excel document version of this questionnaire to respond to the questions contained herein. Please provide your answer to each question indented below the question. Please supply any applicable supporting information and documentation you feel appropriate in addition to answers entered to the Word document. All information must be typed, organized, and easily understood by evaluators.

Company Information

1) Why did you respond to this RFP?
2) What are your company's expectations in the event of an award?
3) Provide the full legal name, address, tax identifications number, and telephone number for your business.
4) Provide a copy of your audited financial statements from previous year end (or an unaudited copy if an audited copy is not available) for your organization.
5) Does your company name match the name identified on your audited financial statements from previous year end (or an unaudited copy if an audited copy is not available)? If no, why not?
6) Provide a brief history of your company that includes your company's core values and business philosophy.
7) Provide profiles and an organizational chart for key management, sales management and marketing executives of your company that will oversee and ensure the successful implementation, execution and operation of a Contract resulting from this RFP.
8) How long has your company been in the **"FLEET MANAGEMENT AND RELATED TECHNOLOGY SOLUTIONS",** industry?
9) Is your organization best described as a manufacturer or a distributor/dealer/re-seller for a manufacturer of the products/equipment and related services being proposed?
   a) If the Proposer is best described as a re-seller, manufacturer aggregate, or distributor, please provide evidence of your authorization as a dealer/re-seller/manufacturer aggregate for the manufacturer of the products/equipment and related services you are proposing.
   b) If the Proposer is best described as a manufacturer, please describe your relationship with your sales/service force and/or Dealer Network in delivering the products/equipment and related services proposed.
   c) Are these individuals your employees, or the employees of a third party?
   d) If applicable, is the Dealer Network independent or company owned?
10) Please provide your bond rating, and/or a credit reference from your bank.
11) Provide a detailed explanation outlining the licenses and certifications that are both required to be held, and actually held by your organization in pursuit of the commerce and business contemplated by this RFP.
12) Provide a detailed explanation outlining licenses and certifications both required to be held, and actually held, by third parties and sub-contractors to your organization in pursuit of the commerce contemplated by this RFP. If not applicable, please respond with "Not Applicable."
13) Provide all "Suspension or Disbarment" information as defined and required herein. See Section U 9.31.

Industry-Marketplace Successes

14) List and document recent industry awards and recognition.
15) Supply three references/testimonials from customers of like status to NJPA Members to include Government and

Education agencies. Please include the customer's name, contact, and phone number.

16) Provide names and addresses of the top five (5) government or education agency customers to include the scope of projects, size of transaction, and dollar volumes from the past three (3) fiscal years.
17) Provide documentation indicating the total dollar volume for each of your sales to government, education, and non-profit agencies for the last three (3) fiscal years.
18) What percentages of your current (within the past three (3) fiscal years) national sales are to the government and education verticals? Indicate government and education verticals individually

Proposer's ability to sell and service nationwide

19) Please describe your company sales force in terms of numbers, geographic dispersion, and the proportion of their attention focused on the sale and services of the equipment/products contemplated in this RFP?
20) Please describe your dedicated dealer network and number of individual sales force within your dealer network in terms of numbers, geographic dispersion, and the proportion of their attention focused on the sales distribution and delivery of your equipment/products and related services contemplated in this RFP?
21) Please describe your dedicated company service force or dedicated network in terms of numbers, geographic dispersion, and the proportion of their attention focused on the sale of the equipment/products and related services contemplated in this RFP?
22) Please describe your dedicated dealer service force or network in terms of numbers geographic dispersion, and the proportion of their attention focused on the sale of the equipment/products and related services contemplated in this RFP? Additionally, please describe any applicable road service and do they offer the ability to service customers at the customer's location?
23) Describe in detail your customer service program regarding process and procedure. Please include, where appropriate, response time capabilities and commitments as a part of this RFP response and awarded contract.
24) Identify any geographic areas or NJPA market segments of the United States you will NOT be fully serving through the proposed contract.
25) Identify any of NJPA Member segments or defined NJPA verticals you will NOT be offering and promoting an awarded contract to? (Government, Education, Non-profit)
26) Describe your off shore contract sales capabilities and requirements. Define any specific requirements or restrictions as it applies to our members located off shores such as Hawaii and Alaska and the US Islands. Address your off shore shipping program on the Pricing form P of this document.

Marketing Plan

27) Describe your contract sales training program to your sales management, dealer network and/or direct sales teams relating to a NJPA awarded contract.
28) Describe your general marketing program strategy to promote the proposed Contract nationally and ensure success**.**
29) Describe your marketing material, and overall marketing ability, relating to promoting this type of partnership and contract opportunity. As much as possible, please send examples of your marketing materials in electronic format.
30) Describe your use of technology and the internet to provide marketing and ensure national contract awareness.
31) Describe your perception of NJPA's role in marketing the contract and your contracted products/equipment and related services.
32) Describe in detail any unique marketing techniques and methods as a part of your proposal that would separate you from other companies in your industry.
33) Describe your company's Senior Management level commitment with regards to embracement, promoting, supporting and managing a resultant NJPA awarded contract
34) Do you view your products/equipment applicable to an E-procurement ordering process? Yes/ No.
35) If yes, describe examples of E-procurement system(s) that your products/equipment was available through. Demonstrate the success of government and educations customers to ordering through E-procurement.
36) Please describe how you will communicate your pricing and pricing strategy to your sales force nationally?

Other Cooperative Procurement Contracts Held

37) Identify all cooperative contracts hosted by any government or education agency or government or education cooperative or by a third party marketing company, which are marketed in more than one state, held or utilized by the

Proposer.

38) What is the annual dollar sales volume generated through each of the contract(s) identified in your answer to the previous question.
39) Identify awarded WSCA or specific state procurement contracts held or utilized by the Proposer with any State of the United States.
40) What is the annual combined dollar sales volume for each of these contracts?
41) Identify any GSA Contracts held or utilized by the Proposer.
42) If you are awarded the NJPA contract, are there any market segments or verticals (e.g., higher education, K-12 local governments, non-profits etc.) or geographical markets where the NJPA contract will not be your primary contract purchasing vehicle? If so, please identify those markets and which cooperative purchasing agreement will be your primary vehicle.
43) If you are awarded the NJPA contract, is it your intention and commitment to lead with your NJPA contract? ____ Yes ____ No Explain and demonstrate your commitment and/or restrictions.
44) Identify a proposed administrative fee payable to NJPA for facilitation, management and promotion of the NJPA contract, should you be awarded. This fee is typically calculated as a percentage of Contract sales and not a line item addition to the customers cost of goods.

Value Added Attributes

45) If applicable, describe any product/equipment training programs available as options for NJPA members. If applicable, do you offer equipment operator training as well as maintenance training? ____ Yes ____ No
46) Is this training standard as a part of a purchase or optional?
47) Describe current technological advances your proposed equipment/products and related services offer.
48) Describe your "Green" program as it relates to your company, your products/equipment, and your recycling program, including a list of all green products accompanied by the certifying agency for each (if applicable).
49) Describe any Women or Minority Business Entity (WMBE) or Small Business Entity (SBE) accreditations and the general minority and small business program of your organization as it relates to a Contract resulting from this RFP.
50) Identify any other unique or custom value added attributes of your company or your products/equipment or related services.
51) Other than what you have already demonstrated or described, what separates your company, your products/equipment and related services from your competition? What makes your proposed solutions unique in your industry as it applies to NJPA members?
52) Identify and describe any service contract options included in the proposal, or offered as a proposed option, for the products/equipment being offered.
53) Identify your ability and willingness to offer an awarded contract to qualifying member agencies in Canada specifically and internationally in general.
54) Describe any unique distribution and/or delivery methods or options offered in your proposal.

(Products, Pricing, Sector Specific, Services, Terms and Warranty are addressed on Form P)

Signature: _____ Date: _____

Form B

PROPOSER INFORMATION

Company Name: _____

Address: _____

City/State/Zip: _____

Phone: _____ Fax: _____

Toll Free Number: _____ E-mail: _____

Web site: _____

Voids sometimes exist between management (those who respond to RFPs) and sales staff (those who contact NJPA Members) that result in communication problems. Due to this fact, provide the names of your key sales people, phone numbers, and geographic territories for which they are responsible

COMPANY PERSONNEL CONTACTS

Contract Manager _____

Email: _____ Phone: _____

Other contract management personnel

Name: _____ Title: _____

Email: _____ Phone: _____

Name: _____ Title: _____

Email: _____ Phone: _____

Name: _____ Title: _____

Email: _____ Phone: _____

Name: _____ Title: _____

Email: _____ Phone: _____

Name: _____ Title: _____

Email: _____ Phone: _____

Name: _____ Title: _____

Email: _____ Phone: _____

Form C

EXCEPTIONS TO PROPOSAL, TERMS, CONDITIONS AND SOLUTIONS REQUEST

Company Name: _____

Note: **Original must be signed** and inserted in the inside front cover pouch.

Any exceptions to the Terms, Conditions, Specifications, or Proposal Forms contained herein shall be noted in writing and included with the proposal submittal. Proposer acknowledges that the exceptions listed may or may not be accepted by NJPA and may or may not be included in the final contract. NJPA may clarify exceptions listed here and document the results of those clarifications in the appropriate section below.

Section/page	Term, Condition, or Specification	Exception	NJPA Accepts	NJPA Rejects

Proposer's Signature: _____ **Date:** _____

NJPA's clarification on exception/s listed above:

Contract Award
RFP #051613

FORM D

Formal Offering of Proposal
(To be completed Only by Proposer)

FLEET MANAGEMENT AND RELATED TECHNOLOGY SOLUTIONS,

In compliance with the Request for proposal (RFP) for "FLEET MANAGEMENT AND RELATED TECHNOLOGY SOLUTIONS", the undersigned warrants that I/we have examined this RFP and, being familiar with all of the instructions, terms and conditions, general specifications, expectations, technical specifications, service expectations and any special terms, do hereby propose, fully commit and agree to furnish the defined equipment/products and related services in full compliance with all terms, conditions of this RFP, any applicable amendments of this RFP, and all Proposer's Response documentation. Proposer further understands they accept the full responsibility as the sole source of responsibility of the proposed response herein and that the performance of any sub-contractors employed by the Proposer in fulfillment of this proposal is the sole responsibility of the Proposer.

Company Name: _____ Date: _____

Company Address: _____

City:_____ State: _____ Zip: _____

Contact Person: _____ Title: _____

Authorized Signature (ink only): _____ _____
(Name printed or typed)

Form E

Contract Acceptance and Award

(To be completed only by NJPA)

NJPA 051613 FLEET MANAGEMENT AND RELATED TECHNOLOGY SOLUTIONS

_____

Proposer's full legal name

Your proposal is hereby accepted and awarded. As an awarded Proposer, you are now bound to provide the defined product/equipment and services contained in your proposal offering according to all terms, conditions, and pricing set forth in this RFP, any amendments to this RFP, your Response, and any exceptions accepted or rejected by NJPA on Form C.

The effective date of the Contract will be _____, 20_____ and continue for four years thereafter AND which is subject to annual renewal at the option of both parties. This contract has the consideration of an optional fifth year renewal option at the discretion NJPA.

National Joint Powers Alliance® (NJPA)

NJPA Authorized signature: _____ _____

NJPA Executive Director (Name printed or typed)

Awarded this _____ day of 20_____ **NJPA Contract Number # 051613**

NJPA Authorized signature: _____ _____

NJPA Board Member (Name printed or typed)

Executed this _____ day of 20_____ **NJPA Contract Number # 051613**

Proposer hereby accepts contract award including all accepted exceptions and NJPA clarifications identified on FORM C.

Vendor Name _____

Vendor Authorized signature: _____ _____

(Name printed or typed)

Title: _____

Executed this _____ day of 20_____ **NJPA Contract Number # 051613**

Form F

PROPOSER ASSURANCE OF COMPLIANCE

Proposal Affidavit Signature Page

PROPOSER'S AFFIDAVIT

The undersigned, representing the persons, firms and corporations joining in the submission of the foregoing proposal (such persons, firms and corporations hereinafter being referred to as the "Proposer"), being duly sworn on his/her oath, states to the best of his/her belief and knowledge:

1. The undersigned certifies the Proposer is submitting their proposal under their true and correct name, the Proposer has been properly originated and legally exists in good standing in its state of residence, that the Proposer possesses, or will possess prior to the delivery of any product/equipment and related services, all applicable licenses necessary for such delivery to NJPA members agencies nationally, and that they are authorized to act on behalf of, and encumber the "Proposer" in this Contract, and

2. To the best of my knowledge, no Proposer or Potential Proposer, nor any person duly representing the same, has directly or indirectly entered into any agreement or arrangement with any other Proposers, Potential Proposers, any official or employee of the NJPA, or any person, firm or corporation under contract with the NJPA in an effort to influence either the offering or non-offering of certain prices, terms, and conditions relating to this RFP which tends to, or does, lessen or destroy free competition in the letting of the Contract sought for by this RFP, and

3. The Proposer or any person on his/her behalf, has not agreed, connived or colluded to produce a deceptive show of competition in the manner of the proposal or award of the referenced contract, and

4. Neither I, the Proposer, nor, any officer, director, partner, member or associate of the Proposer, nor any of its employees directly involved in obtaining contracts with the NJPA or any subdivision of the NJPA, has been convicted of false pretenses, attempted false pretenses or conspiracy to commit false pretenses, bribery, attempted bribery or conspiracy to bribe under the laws of any state or federal government for acts or omissions after January 1, 1985, and

5. The Proposer has examined and understands the terms, conditions, scope, contract opportunity, specifications request and other documents of this solicitation and that any and all exceptions have been noted in writing and have been included with the proposal submittal, and

6. If awarded a contract, the Proposer will provide the equipment/products and services and/or services to qualifying members of the NJPA in accordance with the terms, conditions, scope of this RFP, Proposer offered specifications and other documents of this solicitation, and

7. The undersigned, being familiar with and understand the expectations requested and outlined in this RFP under consideration, hereby proposes to deliver through valid requests, Purchase Orders or other acceptable forms ordering and procurement by NJPA Members. Unless otherwise indicated, requested and agreed to on a valid purchase order per this RFP, only new, unused and first quality equipment/products and related services are to be transacted with NJPA Members relating to an awarded contract, and

8. The Proposer has carefully checked the accuracy of all proposed products/equipment and related services and listed total price per unit of purchase in this proposal to include shipping and delivery considerations. In addition, the Proposer accepts all general terms and conditions of this RFP, including all responsibilities of commitment as outlined and proposed, and

9. In submitting this proposal, it is understood that the right is reserved by the NJPA to reject any or all proposals and it is agreed by all parties that this proposal may not be withdrawn during a period of 90 days from the date

proposals were opened regarding this RFP, and

10. The Proposer certifies that in performing this Contract they will comply with all applicable provisions of the federal, state, and local laws, regulations, rules, and orders, and

Company Name: _____

Contact Person for Questions:_____-
_____

(Must be individual who is responsible for filling out this Proposer's Response form)

Address: _____

City/State/Zip: _____

Telephone Number: _____ Fax Number: _____

E-mail Address:_____

Authorized Signature: _____

Authorized Name (typed): _____

Title: _____

Date: _____

Notarized

Subscribed and sworn to before me this _____ the day of _____ , 20_____

Notary Public in and for the County of _____ State of _____

My commission expires: _____

Signature: _____

Form G.

OVERALL EVALUATION AND CRITERIA

For the Proposed Subject "**FLEET MANAGEMENT AND RELATED TECHNOLOGY SOLUTIONS**"

Conformance to terms and conditions to include documentation	50	
Pricing	400	
Financial, Industry and Marketplace Successes	75	
Bidder's Ability to Sell and Service Contract Nationally	100	
Bidder's Marketing Plan	50	
Value Added Attributes	75	
Warranty Coverages and Information.	50	
Selection and Variety of Products and Services Offered	200	
Total Points	1000	0

Reviewed by: _____ Its_____

_____ Its_____

Form P

PROPOSER QUESTIONNAIRE
Products/Equipment, Pricing, Sector Specific, Services, Terms and Warranty

Proposer Name: _____

Questionnaire completed by: _____

Payment Terms and Financing Options

1) Identify your payment terms if applicable. (Net 30, etc.)
2) Identify any applicable leasing or other financing options as defined herein.
3) Briefly describe your proposed order process for this proposal and contract award. (Note: order process may be modified or refined during an NJPA member's final Contract phase process).
4) Do you accept the P-card procurement and payment process?
5) Describe your ability to serve NJPA and NJPA Members through an E-Marketplace solution?

Warranty

6) Describe, in detail, your Manufacture Warranty Program including conditions and requirements to qualify, claims procedure, and overall structure.
7) Do all warranties cover all products/equipment parts and labor?
8) Do warranties impose usage limit restrictions?
9) Do warranties cover the expense of technicians travel time and mileage to perform warranty repairs?
10) Please list any other limitations or circumstances that would not be covered under your warranty.
11) Please list any geographic regions of the United States for which you cannot provide a certified technician to perform warranty repairs. How will NJPA Members in these regions be provided service for warranty repair?

Equipment/Products and Related Services and Pricing

12) Provide a general narrative description of the equipment/products and related services you are offering in your proposal.
13) Provide a general narrative description of your pricing model identifying how the model works (line item and/or published catalog percentage discount).
14) Propose a strategy, process, and specific method of facilitating "Sourced Product/equipment and related services" or "Non-Standard Options" solution as defined herein.
15) Provide an overall proposed statement of method of pricing for individual line items, percentage discount off published product/equipment catalogs and/or category pricing percentage discount with regard to all equipment/products and related services and being proposed. Provide a SKU number for each item being proposed.
16) Describe your ability to take advantage of, or operate with electronic marketplace solutions, if any.
17) If applicable, provide a "CORE LIST" of equipment/products and related services (defined as products/equipment or services most frequently used and highlighted with additional discounts when compared to the standard "Pricing") as a separate and named spreadsheet. Include special pricing, if any, on these items.
18) If applicable, provide a "Hot List" format of specific product/equipment and related services as defined herein.
19) Provide your NJPA customer volume rebate programs, as applicable.
20) Identify any Total Cost of Acquisition (as defined herein) cost(s) which is **NOT** included "Pricing" submitted with your proposal response. Identify to whom these charges are payable to and their relationship to Proposer.
21) If freight, delivery or shipping is an additional cost to the NJPA member, describe in detail the complete shipping and delivery program.

22) As an important part of the evaluation of your offer, you must indicate the level of pricing you are offering. Prices offered in this proposal are **(Your proposal will be deemed "Non-Responsive" if this question is not answered):**

_____a. Pricing is the same as typically offered to an individual municipality, Higher ed or school district.

_____b. Pricing is the same as typically offered to GPOs, cooperative procurement organizations or state purchasing departments.

_____c. Better than typically offered to GPOs, cooperative procurement organizations or state purchasing departments.

23) Do you offer quantity or volume discounts? _____ YES _____ NO Outline guidelines and program.

24) Describe in detail your proposed exchange and return program(s) and policy(s).

25) Specifically identify those shipping and delivery and exchange and returns programs as they relate to Alaska and Hawaii and any related off shore delivery of contracted products/ equipment and related services

26) Please describe any self-audit process/program you plan to employ to verify compliance with your anticipated contract with NJPA. Please be as specific as possible.

Industry or Sector Specific Questions

27) NA

Signature: _____Date: _____

Pre-submission Checklist

- ❑ Have you read, and do you understand the intent this RFP?
- ❑ Have you attended the Pre-Proposal Conference for this RFP?
- ❑ Have you completed the questionnaires (Forms A & P) to the best of your ability?
- ❑ Have you submitted pricing for all of the product/equipment and related services you are proposing within the scope of this RFP?
- ❑ Have you packaged your Proposal submission identifying conspicuously "Competitive Proposal Enclosed, Please hold for public opening XX-XX-XXX"?
- ❑ Have you sent your package in sufficient time for physical delivery at 202 12th ST NE Staples, MN 56479 to occur prior to the deadline for delivery?
- ❑ Have you submitted hard copy original signed, completed, and dated forms C, D, E, and hard copy signed signature page only from forms A and P of this RFP?
- ❑ Have you submitted verification of liability insurance with the coverage and limits required in the RFP?
- ❑ Have you provided an electronic copy (saved on a CD or flash drive) of your **entire** proposal including, but not limited to, Forms A, B, C, D, E, F, & P in your proposal?

Contents of your Proposal response:

- ❑ **Hard copy original signed, completed, and dated forms C, D, and hard copy signed signature page only from forms A and P.**
- ❑ **Electronic submission of proposal forms A, B, C, D, E, F, & P (CD or flash drive).**
- ❑ **Certificate of Insurance (demonstration of insurability)**

Form Titles

Form A	Proposer Questionnaire – General Business Information
Form B	Proposer Information
Form C	Exceptions to Proposal, Terms, Conditions, and Solutions Request
Form D	Formal Offering of Proposal
Form E	Contract Acceptance and Award
Form F	Proposer Assurance of Compliance
Form G	Overall Evaluation and Criteria
Form P	Proposer Questionnaire – Products/equipment, Pricing, Sector Specific, Services, Terms and Warranty

Addendum 041213
To that certain
RFP#051613
Issued by
The National Joint Powers Alliance®
For the procurement of

FLEET MANAGEMENT AND RELATED TECHNOLOGY SOLUTIONS

Please consider the following to be a part of the above RFP:

The RFP number changes from #061613 to #051613. All other dates remain the same.

Maureen

www.njpacoop.org

NJPA
National Joint Powers Alliance®

Maureen Knight
Contracts and Compliance Manager
phone 218-895-4114
email maureen.knight@njpacoop.org

www.njpacoop.org

NJPA
National Joint Powers Alliance®

200 First Street NE
Staples, MN 56479

Proposal Opening Witness

Date of opening: May 16, 2013

The witnesses signed below hereby witness they were present on the above date and in witness of the public opening of all responses received to the Request For Proposal #051613 for the procurement of FLEET MANAGEMENT AND RELATED TECHNOLOGY SOLUTIONS by NJPA and NJPA Members.

Proposals are evaluated first on responsiveness then on the other criteria included in the RFP. Responsiveness consists of the following criteria:

1. Was the response received prior to the deadline of submission?
2. Was the response properly packaged and addressed?
3. Did the response contain the proper bid bond?
4. Did the response include documents with original signatures that were required?

Responses were received from the following:

Agile Access Control Inc. – received 5/13/13 at 11:39am
Bidder deemed responsive
Assetworks, Inc. – received 5/14/13 at 12:03pm
Bidder deemed responsive
Cal Amp Wireless Networks – received 5/14/13 at 10:36am
Bidder deemed responsive
Invers Mobility Solutions Inc. – received 5/13/13 at 11:39am
Bidder deemed responsive
LHP Telematics LLC – received 5/15/13 at 12:20pm
Bidder deemed responsive
Multi Force Systems Corporation – received 5/14/13 at 12:03pm
Flash Drive empty
Certificate of Insurance missing
National Products, Inc. – received 5/15/13 at 12:20pm
Bidder deemed responsive
Networkfleet – received 5/15/13 at 11:07am
Bidder deemed responsive
RouteMatch Software, Inc. – received 5/15/13 at 11:07am
Bidder deemed responsive
Syn-Tech Systems, Inc. FuelMaser – received 5/14/13 at 10:36am
Bidder deemed responsive
TeMeDa LLC – received 5/15/13 at 12:20pm
Bidder deemed responsive
Utilimarc, Inc. – received 5/15/13 at 12:21pm
Bidder deemed responsive
Zonar Systems, Inc. – received 5/7/13 at 11:27am
Bidder deemed responsive

www.njpacoop.org

NJPA
National Joint Powers Alliance®

200 First Street NE
Staples, MN 56479

WITNESSES:

Gregg Meierhofer, Bids and Contracts Officer, NJPA	5/16/13
Ginger Line, Contracts Specialist, NJPA	5/16/13
Tracy Plinske, Contracts Specialist, NJPA	5/16/13
Sheila Christoffersen, Administrative Specialist, NJPA	5/16/13
Maureen Knight, Contracts and Compliance Manager, NJPA	5/16/13
Paul Anderson, Contract Manager, NJPA	5/16/13

COMMENT AND REVIEW
To the
REQUEST FOR PROPOSAL (RFP) #051613
Entitled
FLEET MANAGEMENT AND RELATED TECHNOLOGY SOLUTIONS

The following advertisement was placed in the Minneapolis, MN Star Tribune on April 4, 2013 and April 11, 2013 and Oregon's Daily Journal of Commerce on April 4, 2013 and on the NJPA website www.njpacoop.org, Onvia website www.onvia.com and Notice to Bidders website noticetobidders.com:

The National Joint Powers Alliance® (NJPA), on behalf of NJPA and its current and potential Member agencies to include all Government, Higher Education, K12 Education, Non-Profit, and all other Public Agencies located nationally in all fifty states and potentially internationally, issues this Request For Proposal (RFP) to result in a national contract solution for the procurement of FLEET MANAGEMENT RELATED TECHNOLOGY SOLUTIONS. Details of this RFP are available beginning April 4, 2013 and continuing until May 9, 2013. Details may be obtained by letter of request to Gregg Meierhofer, NJPA, 202 12th Street Northeast, P.O. Box 219, Staples, MN 56479, or by e-mail at RFP@njpacoop.org. Proposals will be received until May 15, 2013 at 4:30 p.m. Central Time at the above address and opened May 16, 2013 at 8:00 A.M. Central Time.

RFPs were requested from and distributed to:

Assetworks, Inc.
Invers Mobility Solutions Inc.
Agile Access Control Inc.
ARI
Chevin Fleet Solutions
DeClerk LP Gas, Inc.
eRepublic
Flagship Fleet Management
G4S Integrated Fleet Services LLC
LHP Telematics LLC
Mercury Associates
PHH
QEK
RouteMatch Software, Inc.
Stoops Freightliner – Quality Trailers
Trak
Utilimarc, Inc.
WeatherBELL Analytics LLC
State of Florida
State of Montana
Syn-Tech Systems, Inc. FuelMaster
Adomani Electric
Air-Trak
Cal Amp Wireless Networks
CompassCom
E.J. Ward
ETRA
Fleetio
Kelley Imaging Systems
Local Motion
Multiforce Systems Corporation
PowerGrip Manufacturing Ltd.
RAM Mounting Systems
RTA Fleet
TeMeDa LLC
True Track by Veterus, Inc.
Verizon Enterprise Solutions
Zonar Systems, Inc.
State of Iowa
State of South Carolina

State of West Virginia

Late RFP requests received from:

Ascourel USA
Cartasite
AVI-SPL

Bids were opened on May 16, 2013 at the NJPA offices located at 202 12th Street Northeast in Staples, Minnesota 56479. All bids received were deemed responsive. Bids were received from the following:

Agile Access Control Inc.
Assetworks, Inc.
Cal Amp Wireless Networks
Invers Mobility Solutions Inc.
LHP Telematics LLC
Multi Force Systems Corporation
National Products, Inc.
Networkfleet
RouteMatch Software, Inc.
Syn-Tech Systems, Inc. FuelMaster
TeMeDa LLC
Utilimarc, Inc.
Zonar Systems, Inc.

Bids were reviewed by the Proposal Evaluation Committee consisting of:

Ginger Line, CPPB, NJPA Contract Specialist
Gregg Meierhofer, CPPO, NJPA Bids and Contracts Officer
Tracy Plinske, NJPA Contract Specialist
Keith Hanson, CPA, NJPA Accounting Manager
Maureen Knight, JD and BBA, NJPA Contracts and Compliance Manager
Misty Myers, JD, NJPA Attorney

The findings of the Proposal Evaluation Committee are summarized as follows:

The Proposal Evaluation Committee used the established NJPA RFP evaluation criteria and determined that all responses met the expectations of Level One and Level Two Responsiveness.

Agile Access Control, Inc., Syn-Tech Systems, Inc. (FuelMaster) and National Products, Inc. all provided very strong responses with highly competitive pricing and a strong ability to sell and service nationally. Agile offers a wide variety of options that integrate with other systems and software as a service or a perpetual license. Their core product has powerful features to manage vehicles and drivers including maintenance, fuel management, odometer collection, risk management, carpooling and reporting. Syn-Tech has a strong product along with exceptional past industry success, a strong sales and distribution system, and a solid marketing plan. Syn-Tech offers automated fuel management and munitions loading systems along with engineering design and systems integration. National Products, Inc. offers very strong industry and marketplace success with their RAM mounting systems as well as a large network of dealers across the nation and exceptional warranties. They manufacture rugged mounting solutions for electronic devices in any vehicle, vessel or aircraft for positioning on any surface, inside or outside.

NetworkFleet's response had competitive pricing, quality products and a large reseller network across the U.S. They offer quality GPS devices for fixed or movable fleet assets, location tracking and remote diagnostic, plug and play devices, web based vehicle tracking, and exceptional training and support programs as well.

Assetworks, Inc., CalAmp Wireless Networks and RouteMatch Software, Inc. all provided competitive responses. Assetworks has solid experience and success, a very strong industry presence and offers a wide variety of products in fleet and fuel operations and management. CalAmp has competitive pricing for its broad selection of quality products. They offer Mobile Data and Mobile Resource Management (MRM), wireless data solutions, communications and services through their strong, company sales force. RouteMatch also offers a wide variety of products and very competitive pricing. They have extensive industry experience in and offer Intelligent Transportation Systems and fleet management apps, GPS fleet tracking, MRM through Enterprise software platform, fully integrated single database, single app fixed route CAD, and paratransit solutions.

Zonar Systems, Inc. had a solid response in regards to industry experience and success. They offer a unique GPS, onboard computing system for electronic vehicle inspection reporting.

For these reasons the NJPA Proposal Review Committee recommends award of NJPA #051613 to

Agile Access Control, Inc.	051613-AAC
AssetWorks Inc.	051613-AWI
CalAmp Wireless Networks Corporation	051613-CAW
National Products, Inc.	051613-NAT
Network Fleet	051613-NWF
RouteMatch Software, Inc.	051613-RMI
Syn-Tech Systems, Inc.	051613-SYS
Zonar Systems, Inc.	051613-ZSI

Ginger Line, CPPB, Contracts Specialist	7-1-13 Date
Gregg Meierhofer, CPPO, Bids and Contracts Officer	7-1-13 Date
Tracy Plinske, Contracts Specialist	7-1-13 Date
Keith Hanson, CPA, Accounting Manager	7-1-13 Date
Maureen Knight, JD, BBA, Contracts & Compliance Manager	7-1-13 Date
Misty Myers, JD, Attorney	7/1/13 Date

Form G
FLEET MANAGEMENT AND RELATED TECHNOLOGY SOLUTIONS

	Possible Points	Agile Access Control Inc.	Assetworks, Inc.	Cal Amp Wireless Networks	Invers Mobility Solutions, Inc.	LHP Telematics LLC	Multi Force Systems Corp.	National Products, Inc.	Networkfleet	RouteMatch Software, Inc.	Syn-Tech Systems Inc.-FuelMaster	TeMeDa LLC	Utilimarc, Inc.	Zonar Systems, Inc.
Conformance to terms and conditions to include documentation	50	47	43	40	46	40	42	46	46	29	47	40	43	43
Pricing	400	343	274	317	329	305	303	349	313	328	350	324	278	278
Financial, Industry and Marketplace Successes	75	65	65	60	60	53	60	65	64	59	70	33	60	63
Bidder's Ability to Sell and Service Contract Nationally	100	83	87	74	59	61	66	80	81	71	90	65	81	74
Bidder's Marketing Plan	50	44	43	34	41	34	41	45	42	38	45	36	45	41
Value Added Attributes	75	69	69	67	60	63	63	66	68	60	65	58	60	61
Warranty Coverages and Information	50	43	43	43	40	37	43	46	45	39	40	42	41	39
Selection and Variety of Products and Services Offered	200	182	184	171	157	160	166	168	175	171	163	152	175	170
Total Points	1,000	874	806	805	792	751	784	865	833	794	870	749	782	768

7/1/2013
Ginger Line, CPPB, NJPA

7/1/2013
Tracy Plinske, NJPA

7/1/2013
Keith Hanson, CPA, NJPA

7/1/2013
Maureen Knight, JD, NJPA

7/1/2013
Misty Myers, JD-Attorney, NJPA

7/1/2013
Gregg Meierhofer, CPPO, NJPA

Regular Meeting & Retreat Minutes of the
NATIONAL JOINT POWERS ALLIANCE®
Board of Directors
Tuesday, July 16, 2013
Executive Conference Room

Chair Wolden called the Regular Board meeting to order at 5:50 p.m. with the following members present: Wayne Wolden, Scott Veronen, Randy Pepin, Brian Lehman, Mike Wilson, Mike Domin, Barb Schmitt, and Barb Neprud. Also present were Chad Coauette, Susan Nanik, Diana Pihlaja, David Jessop, Misty Myers, Rynell Schock, and Deb Cervantez, staff.

Ms. Schmitt moved, seconded by Mr. Domin to accept the agenda as amended. Motion carried.

Mr. Wilson moved, seconded by Ms. Neprud to accept the minutes of the Regular Board Meeting held on June 18, 2013. Motion carried.

Ms. Pihlaja presented the monthly Financial Reports.

Mr. Pepin moved, seconded by Mr. Veronen to approve the transfer of $852.53 from Fund 06 (building) to Fund 15 (CP) effective June 30, 2013. Motion carried.

Ms. Schmitt moved, seconded by Mr. Wolden to approve the check register and Treasurer's Report of Cash, Revenues, and Expenditures from:

- Mid-Central Bank and to pay vendor disbursement #80856
- First International Bank and to pay all vendor disbursements #79063 to #79370

Motion carried.

Ms. Schmitt moved, seconded by Mr. Wilson to approve all Wire Transfers from:

- Mid-Central Bank #442 to #447
- First International Bank #2012-00423 to #2012-00455 and #2013-00001 to #2013-00002

Motion carried.

Ms. Neprud moved, seconded by Mr. Pepin to accept the Consent Agenda as follows:

- Updated Membership Agreements Members added June 1-30, 2013.
- Request Authorization to Bid
    - Alternative Fuel Refueling Infrastructure – CNG, LNG, Propane, and EV with Related Accessories, Services and Supplies
    - Portable Construction & Maintenance Equipment
- Approve Bid Evaluation Committee's Recommendation to Award RFP #051613 for Fleet Management and Related Technology Solutions to:
    - Agile Access Control, Inc.
    - AssetWorks Inc.
    - CalAmp Wireless Networks Corporation
    - National Products, Inc.
    - Network Fleet
    - RouteMatch Software, Inc.
    - Syn-Tech Systems, Inc.
    - Zonar Systems, Inc.

- Approve Bid Evaluation Committee's Recommendation to Award RFP #060613 for Resilient Surfaces with Related Supplies, Accessories and Equipment to:
    - Mannington Commercial, a business unit of Mannington Mills, Inc.
- Approve Renewal of Agreements with
    - Lennox Industries #072711
    - NorAm Marketing Services #062512
    - School Specialty #052910
    - Altec Industries #060311
    - Steelcase, Inc. #052910
    - John Deere Construction Retail Sales #060311
    - Wastequip #060612
    - Flex-O-Lite #052412
    - Old Dominion Brush #060612
    - Sullair Corporation #060311
    - Payless ShoeSource #061812
    - Multiquip #060311
    - Enviromental Solutions Group (ESG) #060612
- Approve ezIQC Renewal of Agreements with
    - AND Contractors, Inc. MDFCG-022912
    - HITT Contracting, Inc. MD9MC-022912

Motion carried.

Ms. Schock reported on Education Solutions. Update was given on the Leadership Academy, Mentor/Peer Coaching Academy and upcoming trainings.

Mr. Jessop reported on Risk Management. Update was given on the June 27, 2013 RMPEC meeting and the PCORI tax. There were no recommendations for action.

Ms. Schmitt moved, seconded by Mr. Lehman to approve the Northwest Tribal Emergency Management Council Marketing Partner Agreement ezIQC. Motion carried.

Mr. Wilson moved, seconded by Mr. Pepin to approve Purchase of Service Agreements for the Collaborative Service Workers with District 182 – Crosby Ironton and District 186 – Pequot Lakes. Motion carried.

Ms. Neprud moved, seconded by Mr. Domin to approve the Purchase of Service Agreement for PBIS with Benton Stearns Special Education District. Motion carried.

Ms. Schmitt moved, seconded by Mr. Lehman to approve the expansion in FY13-14 of the Digital Learning Solutions program to include 7th and 8th grade level classes and credit recovery classes. Motion carried.

Mr. Wilson moved, seconded by Ms. Schmitt to approve full-time status for insurance purposes be defined as those employees working at least .75 FTE (195 days) per year. Motion carried.

Mr. Lehman moved, seconded by Mr. Pepin to approve the Memorandum's of Understanding with the Exempt/Non-Exempt Group and the Cabinet. Motion carried

Mr. Wilson moved, seconded by Mr. Veronen to approve the Master Agreement with the Director of Contracts and Marketing. Motion carried.

Ms. Neprud moved, seconded by Mr. Lehman to approve the FY 13-14 employee matrix as presented. Motion carried.

Ms. Schmitt moved, seconded by Mr. Wilson to open a Contract Manager position. Motion carried.

Mr. Wolden moved, seconded by Mr. Lehman to approve the revised Marketing Manager job description and open the position. Motion carried.

Mr. Domin moved, seconded by Ms. Schmitt to:

- Approve the reassignment of Carol Jackson to Administrative Specialist II; DLS/KS/SB, effective August 1, 2013 and open the Customer Service Specialist position
- Approve the promotion of Scott Wermter to Cisco TelePresence effective July 1, 2013 and open the IT Support Specialist position
- Approve the hiring of Tanya Nelson as Administrative Specialist I; Receptionist effective July 29, 2013

Motion carried.

Dr. Coauette gave a report on his first two weeks. The Capitol Hill Associates Legislative Summary Report was reviewed.

All board members who attended the MSC Summer Board Conference reported back on their experience at the conference.

Mr. Wolden distributed the minutes from the MSC Board of Directors meeting held on July 11, 2013.

National Conference dates were reviewed.

Mr. Wolden reported to the board about the League of Minnesota Cities Conference that he attended.

Mr. Domin moved, seconded by Mr. Pepin to adjourn the meeting at 7:25 p.m. Motion carried.

NJPA VENDOR CONTRACT SUMMARY – Agile Access Control, Inc.

DATE July 16, 2013	**RFP #** 051613
AWARDED CONTRACT NUMBER **051613-AAC**	**NJPA RFP TITLE & CATEGORY** FLEET MANAGEMENT AND RELATED TECHNOLOGY SOLUTIONS
CONTRACT PERIOD July 16, 2013 through July 16, 2017	**PRICING MODEL** Line item pricing
DESCRIPTION Agile Access Control (Agile) delivers FleetCommander, the industry's most comprehensive fleet and motor pool management solution	
VENDOR NAME AND ADDRESS Agile Access Control, Inc. 14101 Willard Rd, Suite A Chantilly, VA 20151	**VENDOR CONTACT** Ed Smith 408-213-9555 x 501 esmith@agilefleet.com

NJPA CONTRACTS CONSIST OF THE FOLLOWING DOCUMENTS "Contract" as used herein shall mean this RFP, pricing, and fully executed forms P, C, D and E ("Acceptance and Award") with final terms and conditions. • Request for Proposal (RFP) • Acceptance and Award • Pricing and Forms P and C - Available upon request from the NJPA Contract Manager	**RELATED CONTRACT DOCUMENTATION** Affidavit of Advertisement Opening Witness Page Evaluation Comment & Review Board Minutes
DOCUMENTATION OF CONTRACT MAINTENANCE Contract Renewal 2016 Contract Renewal 2015 Contract Renewal 2014	**ADDITIONAL INFORMATION:**

NJPA INFORMATION

NJPA CONTACT Tony Glenz	**TITLE** NJPA Contract Manager
PHONE 218-894-5491	**EMAIL** Tony.glenz@njpacoop.org
ADDRESS 202 12th Street NE, P.O. Box 219, Staples, MN 56479	**WEBSITE** www.njpacoop.org

FORM D

Formal Offering of Proposal
(To be completed Only by Proposer)

FLEET MANAGEMENT AND RELATED TECHNOLOGY SOLUTIONS.

In compliance with the Request for proposal (RFP) for "FLEET MANAGEMENT AND RELATED TECHNOLOGY SOLUTIONS", the undersigned warrants that I/we have examined this RFP and, being familiar with all of the instructions, terms and conditions, general specifications, expectations, technical specifications, service expectations and any special terms, do hereby propose, fully commit and agree to furnish the defined equipment/products and related services in full compliance with all terms, conditions of this RFP, any applicable amendments of this RFP, and all Proposer's Response documentation. Proposer further understands they accept the full responsibility as the sole source of responsibility of the proposed response herein and that the performance of any sub-contractors employed by the Proposer in fulfillment of this proposal is the sole responsibility of the Proposer.

Company Name: Agile Access Control, Inc Date: 5/10/2013

Company Address: 14101 Willard Rd, Suite A

City: Chantilly State: VA Zip: 20151

Contact Person: Ed Smith Title: President

Authorized Signature (ink only): Edwin E. Smith
(Name printed or typed)

Form E

Contract Acceptance and Award

(To be completed only by NJPA)

NJPA 051613 FLEET MANAGEMENT AND RELATED TECHNOLOGY SOLUTIONS

Agile Access Control, Inc.
Proposer's full legal name

Your proposal is hereby accepted and awarded. As an awarded Proposer, you are now bound to provide the defined product/equipment and services contained in your proposal offering according to all terms, conditions, and pricing set forth in this RFP, any amendments to this RFP, your Response, and any exceptions accepted or rejected by NJPA on Form C.

The effective date of the Contract will be July 16, 20 13 and continue for four years thereafter AND which is subject to annual renewal at the option of both parties. This contract has the consideration of an optional fifth year renewal option at the discretion NJPA.

National Joint Powers Alliance® (NJPA)

NJPA Authorized signature: _____ Chad Coonette
NJPA Executive Director (Name printed or typed)

Awarded this July 16 day of 20 13 **NJPA Contract Number # 051613** - AAC

NJPA Authorized signature: _____ Scott Vevona
NJPA Board Member (Name printed or typed)

Executed this July 16 day of 20 13 **NJPA Contract Number # 051613** - AAC

Proposer hereby accepts contract award including all accepted exceptions and NJPA clarifications identified on FORM C.

Vendor Name Agile Access Control, Inc

Vendor Authorized signature: _____ Edwin E. Smith
(Name printed or typed)

Title: President

Executed this 18th day of July 20 13 **NJPA Contract Number # 051613** - AAC

Revision 3-21-13

ATTACHMENT A

Agile Access Control, Inc.
Price Catalog

Contract #051613-AAC

Effective February 1, 2015

Mfg #	Description	Agile MSRP
	Set-up and Hosting	
SU50	FleetCommander Set-up 1 to 50 vehicles (One time setup fee)	$1,000.00
SU100	FleetCommander Set-up 51 to 100 vehicles (One time setup fee)	$1,250.00
SU250	FleetCommander Set-up 101 to 250 vehicles (One time setup fee)	$1,750.00
SU750	FleetCommander Set-up 251 to 750 vehicles (One time setup fee)	$2,250.00
SU1500	FleetCommander Set-up 751 to 1500 vehicles (One time setup fee)	$3,500.00
SU3000	FleetCommander Set-up 1501 to 3000 vehicles (One time setup fee)	$5,000.00
SU5000	FleetCommander Set-up 3001 to 5000 vehicles (One time setup fee)	$6,000.00
AH1-50	Annual Hosting 1 to 50 vehicles (Price Per Year)	$2,400.00
AH100	Annual Hosting 51 to 100 vehicles (Price Per Year)	$2,700.00
AH250	Annual Hosting 101 to 250 vehicles (Price Per Year)	$3,300.00
AH750	Annual Hosting 251 to 750 vehicles (Price Per Year)	$3,600.00
AH1500	Annual Hosting 751 to 1500 vehicles (Price Per Year)	$4,800.00
AH3000	Annual Hosting 1501 to 3000 vehicles (Price Per Year)	$6,000.00
AH5000	Annual Hosting 3001 to 5000 vehicles (Price Per Year)	$7,800.00
	* The cost for hosting will rise by 3% per year after Year 1.	
SEI50	Scheduled external interface 1 to 50 vehicles (Annual price per vehicle) includes annual Maintenance and Technical Support.	$36.00
SEI100	Scheduled external interface 51 to 100 vehicles (Annual price per vehicle) includes annual Maintenance and Technical Support.	$33.00
SEI250	Scheduled external interface 101 to 250 vehicles (Annual price per vehicle) includes annual Maintenance and Technical Support.	$27.00
SEI750	Scheduled external interface 251 to 750 vehicles (Annual price per vehicle) includes annual Maintenance and Technical Support.	$21.00
SEI1500	Scheduled external interface 751 to 1500 vehicles (Annual price per vehicle) includes annual Maintenance and Technical Support.	$18.00
SEI3000	Scheduled external interface 1501 to 3000 vehicles (Annual price per vehicle) includes annual Maintenance and Technical Support.	$15.00
SEI5000	Scheduled external interface 3001 to 5000 vehicles (Annual price per vehicle) includes annual Maintenance and Technical Support.	$12.00

	Perpetual License Solution	
FCP	FleetCommander Perpetual License	
	The perpetual license is calculated by multiplying the cost of each module license by the number of vehicles using that license. For example, the customer has a fleet of 100 vehicles. 23 are in a motor pool. The other 77 are assigned. The customer wishes to track maintenance and accidents. The customer will be using key control systems. The cost for the FleetCommander Perpetual License would be: 23 * $262.50 (Motor Pool) = $6,037.50 77 * $42.00 (Assigned Vehicle) = $3,234.00 100 * $45.00 (Maintenance) = $4,500.00 100 * $37.50 (Risk Management) = $3,750.00 1 * $4,800 (Key Control Module) = $4,800.00 ---------- The total would be $22,321.50 On the quote, the line item would appear as such: **Item #: FCP; FleetCommander Perpetual License** ▪ 23 vehicles - Motor Pool ▪ 77 vehicles – Assigned Vehicle ▪ 100 vehicles – Maintenance ▪ 100 vehicles – Risk Management ▪ Key Control Module Quantity: 1 Unit Price: $22,321.50 Extended Price: $22,321.50	
	Motor Pool Module Perpetual License (price per vehicle)	$262.50
	Assigned Vehicle Module Perpetual License (price per vehicle)	$42.00
	Maintenance Module Perpetual License (price per vehicle)	$45.00
	Parts Management Module Perpetual License (price per vehicle)	$11.25
	Fuel Module Perpetual License (price per vehicle)	$22.50
	Risk Management Module Perpetual License (price per vehicle)	$37.50
	Vehicle Inventory Module Perpetual License (price per vehicle)	$1.75
	Key Control Module Perpetual License (one-time purchase)	$4,800.00
KIO	KioWare Kiosk Software (per kiosk)	$225.00
ASPJPEG	ASPJPEG Single Server License (required if the customer hosts)	$260.00

ASPPDF	ASPPDF Single Server License (required if the customer hosts)	$390.00
ASPUpload	ASPUpload Single Server License (required if the customer hosts)	$260.00
FASTS	Annual Standard Technical Support	10%*
FASM	Annual Software Maintenance	15%*
	*of the FCP perpetual license price plus any customizations. The customer is not charged for Year 1 if Agile hosts. The cost for technical support and software maintenance will rise by 3% per year after Year 1.	

	ASP (SaaS) Solution	
FCMS	FleetCommander Monthly Service*	
	* The cost for the FleetCommander Monthly Service will rise by 3% per year after Year 1.	
	The monthly service is calculated by multiplying the monthly cost of each module license by the number of vehicles using that license and by 12 months. For example, the customer has a fleet of 100 vehicles. 23 are in a motor pool. The other 77 are assigned. The customer wishes to track maintenance and accidents. The customer will be using key control systems. The cost for the FleetCommander Perpetual License would be: 23 * 12 * $8.75 (Motor Pool) = $2,415.00 77 * 12 * $1.40 (Assigned Vehicle) = $1,293.60 100 * 12 * $1.50 (Maintenance) = $1,800.00 100 * 12 * $1.25 (Risk Management) = $1,500.00 1 * $2,400 (Key Control Module) = $2,400.00 ---------- The total would be $9,408.60 On the quote, the line item would appear as such: **Item #: FCMS; FleetCommander Monthly Service** ▪ 23 vehicles - Motor Pool ▪ 77 vehicles – Assigned Vehicle ▪ 100 vehicles – Maintenance ▪ 100 vehicles – Risk Management ▪ Key Control Module Quantity: 12 Unit Price: $784.05 Extended Price: $9,408.60	
	Motor Pool Module (monthly price per vehicle)	$8.75
	Assigned Vehicle Module (monthly price per vehicle)	$1.40
	Maintenance Module (monthly price per vehicle)	$1.50
	Parts Management Module (monthly price per vehicle)	$0.38
	Fuel Module (monthly price per vehicle)	$0.75
	Risk Management Module (monthly price per vehicle)	$1.25
	Vehicle Inventory Module (monthly price per vehicle)	$0.058333
	Key Control Module (annual price)	$2,400.00
FASTS	Annual Standard Technical Support	10%*
FASM	Annual Software Maintenance	15%*
	*of the FCMS monthly service price plus any customizations. The customer is not charged for Year 1 if Agile hosts. The cost for technical support and software maintenance will rise by 3% per year after Year 1.	

	Centralized Key Control Hardware	
K1C1013C008A	8-key Secure Asset Manager (key control system) includes one year of Maintenance and Technical Support	$5,016.00
K1C1616C016A	16-key Secure Asset Manager (key control system) includes one year of Maintenance and Technical Support	$6,554.00
K1C1827C024A	24-key Secure Asset Manager (key control system) includes one year of Maintenance and Technical Support	$7,736.00
K1C1827C032A	32-key Secure Asset Manager (key control system) includes one year of Maintenance and Technical Support	$8,729.00
K1C2828C040A	40-key Secure Asset Manager (key control system) includes one year of Maintenance and Technical Support	$9,606.00
K1C2828C048A	48-key Secure Asset Manager (key control system) includes one year of Maintenance and Technical Support	$10,398.00
K1C2828C056A	56-key Secure Asset Manager (key control system) includes one year of Maintenance and Technical Support	$11,127.00
K1C2828C064A	64-key Secure Asset Manager (key control system) includes one year of Maintenance and Technical Support	$11,804.00
K1C2836C072A	72-key Secure Asset Manager (key control system) includes one year of Maintenance and Technical Support	$12,441.00
K1C2836C080A	80-key Secure Asset Manager (key control system) includes one year of Maintenance and Technical Support	$13,043.00
K1C2836C088A	88-key Secure Asset Manager (key control system) includes one year of Maintenance and Technical Support	$13,617.00
K1C2836C096A	96-key Secure Asset Manager (key control system) includes one year of Maintenance and Technical Support	$14,138.00
K2C2828C104A	104-key Secure Asset Manager (key control system) includes one year of Maintenance and Technical Support	$15,359.00
K2C2828C112A	112-key Secure Asset Manager (key control system) includes one year of Maintenance and Technical Support	$16,583.00
K2C2828C120A	120-key Secure Asset Manager (key control system) includes one year of Maintenance and Technical Support	$17,840.00
K2C2836C128A	128-key Secure Asset Manager (key control system) includes one year of Maintenance and Technical Support	$18,381.00
K2C2836C136A	136-key Secure Asset Manager (key control system) includes one year of Maintenance and Technical Support	$19,671.00
K2C2836C144A	144-key Secure Asset Manager (key control system) includes one year of Maintenance and Technical Support	$20,204.00
K2C2836C152A	152-key Secure Asset Manager (key control system) includes one year of Maintenance and Technical Support	$20,723.00
K2C2836C160A	160-key Secure Asset Manager (key control system) includes one year of Maintenance and Technical Support	$21,228.00
K2C2836C168A	168-key Secure Asset Manager (key control system) includes one year of Maintenance and Technical Support	$21,719.00
K2C2836C176A	176-key Secure Asset Manager (key control system) includes one year of Maintenance and Technical Support	$22,199.00
K2C2836C184A	184-key Secure Asset Manager (key control system) includes one year of Maintenance and Technical Support	$22,670.00

K2C2836C192A	192-key Secure Asset Manager (key control system) includes one year of Maintenance and Technical Support	$23,129.00
C1C1818C010A	10-card Secure Asset Manager (key control system) includes one year of Maintenance and Technical Support	$6,638.00
C1C1827C020A	20-card Secure Asset Manager (key control system) includes one year of Maintenance and Technical Support	$8,525.00
C1C2828C036A	36-card Secure Asset Manager (key control system) includes one year of Maintenance and Technical Support	$11,609.00
C1C2828C054A	54-card Secure Asset Manager (key control system) includes one year of Maintenance and Technical Support	$14,594.00
C2C2828C064A	64-card Secure Asset Manager (key control system) includes one year of Maintenance and Technical Support	$15,756.00
C2C2836C074A	74-card Secure Asset Manager (key control system) includes one year of Maintenance and Technical Support	$17,451.00
C2C2836C090A	90-card Secure Asset Manager (key control system) includes one year of Maintenance and Technical Support	$19,662.00
C2C2836C108A	108-card Secure Asset Manager (key control system) includes one year of Maintenance and Technical Support	$22,514.00
C1C1818C012AC	12-card Mail Slot Secure Asset Manager (key control system) includes one year of Maintenance and Technical Support	$6,638.00
C1C1827C020AC	20-card Mail Slot Secure Asset Manager (key control system) includes one year of Maintenance and Technical Support	$8,525.00
C1C2828C035AC	35-card Mail Slot Secure Asset Manager (key control system) includes one year of Maintenance and Technical Support	$11,367.00
C1C2836C056AC	56-card Mail Slot Secure Asset Manager (key control system) includes one year of Maintenance and Technical Support	$14,802.00
C1E1818C012AC	12-card Daisy-Chained Mail Slot Secure Asset Manager (key control system) includes one year of Maintenance and Technical Support	$5,138.00
C1E1827C0202AC	20-card Daisy-Chained Mail Slot Secure Asset Manager (key control system) includes one year of Maintenance and Technical Support	$6,650.00
C1E2828C035AC	35-card Daisy-Chained Mail Slot Secure Asset Manager (key control system) includes one year of Maintenance and Technical Support	$9,492.00
C1E2836C056AC	56-card Daisy-Chained Mail Slot Secure Asset Manager (key control system) includes one year of Maintenance and Technical Support	$12,927.00
STK	Standard touchscreen kiosk includes one year of Maintenance and Technical Support	$3,103.00
RTK	Ruggedized touchscreen kiosk includes one year of Maintenance and Technical Support	$3,852.00
UPGRADESAMSIZE	Secure Asset Manager (key control system) Upgrade box to the next size	$478.89

ECEKS	Environmentally-controlled enclosure for kiosk/SAM includes one year of Maintenance and Technical Support	$4,066.00
SAMMTS	Secure Asset Manager Maintenance and Technical Support	15%*
	*of the Secure Asset Managers (key control systems) and kiosks. The cost for maintenance and technical support will rise by 3% per year after Year 1.	

	Centralized Key Control Accessories	
2690020	Secure Asset Manager (key control system) SAM Battery	$67.32
2690061	Secure Asset Manager (key control system) Door Latch with Shim	$38.25
2690224B	Secure Asset Manager (key control system) Sliding latch door assembly	$84.15
2690224C	Secure Asset Manager (key control system) Sliding latch door assembly - 8 Key Only	$84.15
2690319	Secure Asset Manager (key control system) SAM Battery - 8 Key only	$67.32
2690346	Secure Asset Manager (key control system) Door lock	$24.48
2690346	Secure Asset Manager (key control system) Panel lock	$24.48
279	Secure Asset Manager (key control system) 1-inch rigid tamper-proof key ring	$4.27
279F	Secure Asset Manager (key control system) 1-inch flexible tamper-proof key ring	$5.62
278	Secure Asset Manager (key control system) 1 5/8-inch rigid tamper-proof key ring	$4.56
278F	Secure Asset Manager (key control system) 1 5/8-inch flexible tamper-proof key ring	$5.89
270	Secure Asset Manager (key control system) 2-inch rigid tamper-proof key ring	$4.97
270F	Secure Asset Manager (key control system) 2-inch flexible tamper-proof key ring	$6.47
277	Secure Asset Manager (key control system) 3-inch rigid tamper-proof key ring	$5.46
277F	Secure Asset Manager (key control system) 3-inch flexible tamper-proof key ring	$7.15
272	Secure Asset Manager (key control system) 4-inch rigid tamper-proof key ring	$6.00
272F	Secure Asset Manager (key control system) 4-inch flexible tamper-proof key ring	$7.80
81400006	Secure Asset Manager (key control system) LCD with keypad	$757.35
271V	Closer tool	$105.57
271D	Crimper tool	$42.84

	In-Vehicle Key Control (Agile FleetShare)	
AR0191	Fuel Level Sensor	$73.00
711-20017	Accident Sensor	$68.00
AR0215	Car Sharing HID standard card	$12.00
AR0227	Car Sharing HID full featured card	$23.00
AR0228	Car Sharing MIFARE card	$5.00
MCSCS	Monthly Car Sharing Communications Service	$65.00
K171-004-100	Compact Car Sharing Kit. Per unit for quantities 1 to 100.	$988.00
K171-004-101	Compact Car Sharing Kit. Per unit for quantities above 100.	$817.00
K171-AS	Car Sharing Annual Support	15%*
	* of the cost of the car sharing equipment. The cost for annual support will rise by 3% per year after Year 1.	

	Utilization and Diagnostic Chips (UDCs)	
UDC500	Utilization and Diagnostic Chip, per UDC for quantities 1 to 500	$273.00
UDC1000	Utilization and Diagnostic Chip, per UDC for quantities 501 to 1000	$256.00
UDC5000	Utilization and Diagnostic Chip, per UDC for quantities 1001 to 5000	$245.00
UDC10000	Utilization and Diagnostic Chip, per UDC for quantities 5001 to 10000	$232.00
CAPE	FC Communications Access Point - External, includes one year of UDC Software, support, updates, warranty	$999.00
CAPI	FC Communications Access Point - Internal, includes one year of UDC Software, support, updates, warranty	$849.00
SCA	Standard Communications Antennae, includes one year of UDC Software, support, updates, warranty	$150.00
CABLES	Cables, Miscellaneous	$100.00
SAMH	Standard Antenna Mounting Hardware	$50.00
UDCSSUW	UDC software, support, updates, warranty	15%*
	*of the UDCs, access points, antennas. The cost for software, support, updates, warranty will rise by 3% per year after Year 1.	

	GPS	
FC303	FleetCommander FC303 GPS Unit, plugs into OBD	$250.00
FC262	FleetCommander FC262 GPS Unit	$250.00
FC262-OBD	FC262 OBD-II accessory	$95.00
FC262-JBUS	FC262 JBUS accessory	$74.00
FCYCable	FleetCommander Y-cable	$68.00
FCGPS-MLTE	FleetCommander GPS-only Lite monthly monitoring fee	$19.99
FCGPS-MFUL	FleetCommander GPS-only Full monthly monitoring fee	$28.99
FCGPS-MDIA	FleetCommander GPS Full and Diagnostics monthly monitoring fee	$28.99
FCGPS-MDAT	Data Connection Service (per vehicle, per month)	$4.25
FCGPS-ALTE	FleetCommander GPS-only Lite annual monitoring fee	$239.88
FCGPS-AFUL	FleetCommander GPS-only Full annual monitoring fee	$347.88
FSGPS-ADIA	FleetCommander GPS Full and Diagnostics annual monitoring fee	$347.88
FCGPS-ADAT	Data Connection Service (per vehicle, per year)	$51.00

	Professional Services	
FCT	FleetCommander User Set-up (one-time fee)	$125.00
FCPS	Professional Services – per hour	$165.00
FCPM1	Project Management – Level 1 – per hour	$195.00
FCPM2	Project Management – Level 2 – per hour	$165.00
FCLSD	Lead Software Developer – per hour	$195.00
FCSD	Software Developer – per hour	$165.00
FCTR	FleetCommander Trainer – per hour	$165.00
FCAA	Administrative Assistant – per hour	$66.00
MISC	Miscellaneous	Negotiated

www.njpacoop.org

National Joint Powers Alliance®

202 12th Street NE
P.O. Box 219
Staples, MN 56479

The following is the proposed redacted Bidder's Response submitted by Awarded Vendor. It is pending final NJPA review. As a public agency, NJPA proposals, responses and awarded contracts are a matter of public record, except for that data included in the proposals, responses and awarded contracts that is classified as nonpublic; thus, pursuant to NJPA policies and RFP terms and conditions, all documentation, except for that data which is nonpublic, is available for review through a formal request process including a written request.

Pursuant to RFP Section G, Paragraph 9.15, all bidders are required to include a statement justifying the trade secret designation for each item that has been redacted. This response did not include the statement therefore NJPA is awaiting receipt of the justifications statement from the Awarded Vendor and will review before this will be deemed the redacted Bidder's Response.

AGILE
FLEETCOMMANDER
WEB-BASED FLEET & MOTOR POOL SOFTWARE

May 10, 2013

The National Joint Powers Alliance
202 12th ST NE
Staples, MN 56479

Subject: FLEET MANAGEMENT AND RELATED TECHNOLOGY SOLUTIONS RFP; Solicitation No 051613

Dear NJPA Evaluation Team:

Attached please find Agile Access Control, Inc.'s response to the NJPA's Request for Proposal for fleet management and related technology solutions.

As you will see in the attached materials, our firm is experienced in providing fleet management and related technologies to government (federal, state, county, municipal), educational (county, universities), commercial, utility, and other markets. Our diverse suite of products is unique and highly configurable and has helped our customers realize millions of dollars in savings for their fleets throughout North America. We are confident NJPA's member base will benefit from our solutions.

Should you have any questions about our response, feel free to contact me using the information provided below.

Regards,

Edwin E. Smith
President
Agile Access Control, Inc.
(408) 213-9555 x501
Esmith@AgileFleet.com

Enclosure

TABLE OF CONTENTS

1 INTRODUCTION 1-1

1.1 SOLUTION OVERVIEW 1-1

1.2 PROPOSAL OVERVIEW 1-3

2 FORM A 2-1

3 FORM B 3-1

4 FORM C 4-1

5 FORM D 5-1

6 FORM E 6-1

7 FORM F 7-1

8 FORM P 8-1

ATTACHMENT A – PRICING A-1

1 Introduction

The objective of this document is to demonstrate the ability of Agile Access Control, Inc. (Agile) to cost-effectively deliver a wide variety of best-in-class fleet management software and related technology solutions to NJPA members. As demonstrated throughout this proposal, we have the marketing, sales, and fleet experience to become a valued partner of the NJPA. We look forward to growing the list of impressive accomplishments that the NJPA has already achieved in the interest of their growing base of members.

This proposal is provided in response to the following document[s]:

- National Joint Powers Alliance (NJPA) Request for Proposal (RFP); RFP #051613 Revision 3-21-13.
- Addendum 041213

1.1 Solution Overview

At the core of our offering is FleetCommander, Agile's 100% web-based fleet management system. FleetCommander is the most comprehensive, and most configurable, information system available for sharing/pooling of vehicles. It is unique in that no other system matches our capabilities with respect to an ability to 1) schedule the use of vehicles, 2) dispatch them out and back in, and 3) provide the management reporting and automated billing processes needed to manage fleet operations. In addition, as reflected in the graphic below, FleetCommander provides several modules (asset management, driver management, maintenance, parts management, risk management, fuel management) and related products (key control systems, in-vehicle hardware) to help manage all facets of fleet.

FleetCommander is a 100% web-based software application. Secure, automated car sharing kiosks, in-vehicle hardware, and a variety of other products and services enhance the value of the FleetCommander solution to our fleet customers.

A variety of innovative technologies, including in-vehicle hardware and self-service automated kiosks are big differentiators of Agile. A few of these are reflected below.

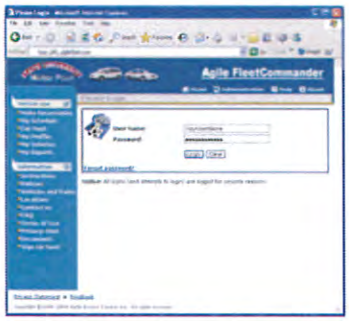

100% web-based software, FleetCommander

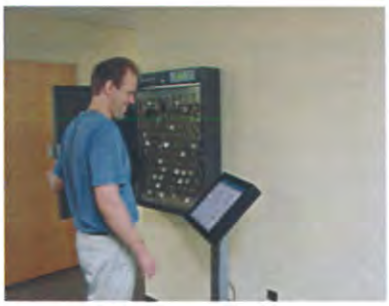

Self-service car sharing kiosks (kiosks and secure key control)

Automatically-updating dashboards, including fleet car sharing dashboards, maintenance dashboards, risk management dashboards, and more

In-vehicle hardware for automated odometer and telematics data capture

Our solution increases fleet customer satisfaction... and we can prove it using tools like the automated, on-line customer survey capability.

Secure, in-vehicle car sharing hardware with real-time communications and GPS

Installation, training, fleet consulting, custom software development, and other fleet-related professional services

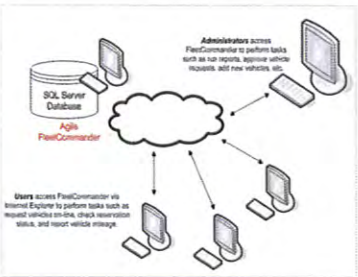

Web-based architecture, with relational database infrastructure, to provide a wide variety of integration options

Secure, fault-tolerant hosting services

FleetCommander is a unique, comprehensive fleet solution comprised of software, hardware, and a variety of related fleet services

1.2 Proposal Overview

It is our desire that you get a true sense of the capabilities, experience, and the culture of Agile Access Control, Inc. We have attempted to provide a comprehensive look at our product/equipment and related services available that fall within the scope of this RFP. We look forward to discussing the merits of our solution with the NJPA.

NJPA Evaluation Criteria	Addressed in RFP?
Adherence to all requirements of this RFP as defined by industry standards.	☑
Prior knowledge of and experience with a Proposer in terms of past performance and market place success.	☑
Capability of meeting or exceeding current and future needs or requirements of NJPA and NJPA members.	☑
Evaluation of Proposer's ability to market to and provide service to all NJPA members nationally.	☑
Financial condition of the Proposer.	☑
Nature and extent of company data furnished in Proposer's response.	☑
Quality of products, equipment, and services offered including value added related services.	☑
History of member service to NJPA type customers.	☑
Overall ability to perform sales, solutions and contract support as submitted.	☑
Ability to meet service and warranty needs.	☑
History of member service to NJPA type customers.	☑
Overall ability to perform sales, solutions and contract support as submitted.	☑
Ability to meet service and warranty needs.	☑

NJPA Evaluation Criteria	Addressed in RFP?
History of meeting shipping and delivery expectations of contracted products/services	☑
Technology advancements and related provisions.	☑
Ability to market and promote the Contract within current business practices.	☑
Willingness to develop and enter into NJPA Contract and business relations.	☑
Favorable bond rating and applicable industry standard licensing ability.	☑
Past market place successes and brand recognition	☑
Demonstrated warranty and product/service responsibility.	☑
Possesses qualifications as a responding Proposer that meets or exceeds those set within the solicitation.	☑
Information from government and education references and past performance information including past agency approval.	☑
Demonstration that they offer the most current industry standard equipment/products and related services and/or services.	☑
Demonstrates financial stability as a company and a favorable banking line of credit.	☑
Demonstrates their equipment/products and related services proposed meet and/or exceed industry standards accepted by educational or governmental agencies nationally.	☑
Demonstrates market place successes and their past performance exhibits an acceptable reputation nationally within the government and education market space.	☑
Demonstrates that the company possesses the background, knowledge, capacity, and ability to sell, deliver, and support equipment/products and related services offered to government and education and related agencies.	☑
Response's conformance to terms and conditions as described in the solicitation, including documentation.	☑

NJPA Evaluation Criteria	Addressed in RFP?
Has provided documentation defining, outlining, and describing their concept of a national marketing program they will be implementing to facilitate and coordinate the cooperative activities required by an awarded NJPA contract.	☑
Has provided all of the required and applicable documentation, i.e., insurance certificates, licenses, and/or registration certificates required to do business nationally.	☑
Line-Item Pricing, or acceptable pricing model in approved excel format, listing of all of the proposed equipment/products and related services and warranty provisions with their associated units of costs.	☑
Hot List Pricing equipment/products and related services in a Line-Item Pricing format (when applicable).	☑
Contract Pricing submitted as requested to include selection of products/equipment and related services in a Line-Item Pricing and/or Percentage Discount from a published gov/ed price list or Catalog	☑

Our detailed response is included in the sections below.

2 Form A

PROPOSER QUESTIONNAIRE- General Business Information
*(Products, Pricing, Sector Specific, Services, Terms and Warranty are addressed on **Form P**)*

Proposer Name: Agile Access Control, Inc.

Questionnaire completed by: Edwin E. Smith, President

Please provide an answer to all questions below and address all requests made in this RFP. Please use the Microsoft Word/Excel document version of this questionnaire to respond to the questions contained herein. Please provide your answer to each question indented below the question. Please supply any applicable supporting information and documentation you feel appropriate in addition to answers entered to the Word document. All information must be typed, organized, and easily understood by evaluators.

Company Information

1) Why did you respond to this RFP?

Our team has been interested in using NJPA as a valuable part of our sales and marketing process for years. However, we were not aware of the details and benefits of the NJPA program until after the previous award in this RFP category. We are excited to have the opportunity to respond to this RFP.

Through respected fleet staff such as Craig Croner from the City of Boise (a user of our products and services) and industry experts such as Steve Perlstein from Mohawk Lifts, we have learned more and more about the value of the NJPA tool. We feel strongly that we understand the value proposition of the partnership with NJPA and we also see how we can contribute to NJPA and its members. We have the marketing tools to maximize the benefit of this opportunity. We look forward to learning more and partnering with NJPA.

2) What are your company's expectations in the event of an award?

Our expectation is that NJPA and Agile will become marketing and sales partners. Our mutual goal will be to serve the members of NJPA by providing high quality products and services through a cost-effective and timely procurement process. We will maximize the benefit of our solution to the NJPA and its members through an aggressive marketing campaign designed to communicate and educate the community about our products and services as well as the NJPA tool set.

3) Provide the full legal name, address, tax identifications number, and telephone number for your business.

Agile Access Control, Inc.
14101 Willard Rd; Suite A
Chantilly, VA 20151

FEIN: 77-553957

(408) 213-9555 x501

4) Provide a copy of your audited financial statements from previous year end (or an unaudited copy if an audited copy is not available) for your organization.

Agile Access Control, Inc. is a privately held C-Corp. We are strong financially. We have no debt (beyond 30 days).

We have provided a variety of other verifiable means for evaluating the health and size of our company, including: banking reference, customer references, customer testimonials, and sales totals.

5) Does your company name match the name identified on your audited financial statements from previous year end (or an unaudited copy if an audited copy is not available)? If no, why not?

Yes.

6) Provide a brief history of your company that includes your company's core values and business philosophy.

Agile is the developer of the FleetCommander fleet management software. The company was formed in September of 2000 and has been serving government, educational, commercial, utility, and other fleet customers ever since.

FleetCommander is a 100% web-based solution that is easy to implement and easy to use. It is provided in a SaaS model or in a customer-hosted model. Fleet staff, fleet drivers, business analysts and managers across an enterprise access the application using a web browser. A variety of hardware, including self-service car sharing kiosks, secure key boxes for dispatching, in-vehicle dispatching technology with GPS capabilities, wireless odometer capture devices, and more, further increase the automation capabilities of our solution while maximizing the efficiency of the fleet.

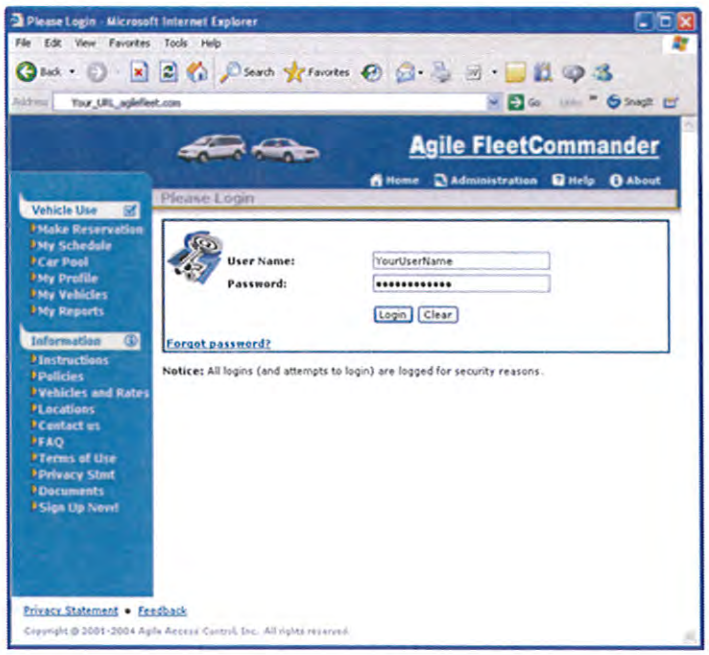

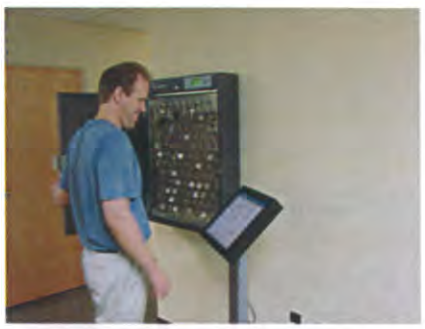

FleetCommander is easy to implement and use. A variety of hardware such as self-service car sharing kiosks is available to maximize the efficiency of the fleet while increasing customer service for drivers.

The term "fleet management system" means many things to many people. Whereas most fleet management software companies were formed to fulfill requirements for maintenance and repairs, we

started from a different position. Our fleet management solution originated from right-sizing and optimization tools aimed at making it very easy to manage shared (scheduled) vehicles in a fleet. Vehicle scheduling and usage tracking tools are our specialty. The core product has always had powerful features to manage vehicles, drivers, and vehicle requests. The tool has evolved over the past ten years to include many additional features aimed at making a fleet manager's life easier across all aspects of fleet management, including, but not limited to maintenance, fuel management, odometer collection, risk management, carpooling, robust reporting, and more.

Innovative technologies such as automatically-updating fleet dashboards, a robust application program interface (API) tool set for integrating with external systems, and a variety of hardware solutions have made FleetCommander one of the fastest growing products in the fleet space.

In-vehicle hardware for automated odometer and telematics data capture

Self-service car sharing kiosks (kiosks and secure key control)

Secure, in-vehicle car sharing hardware with real-time communications and GPS

Innovative technologies, including in-vehicle technologies, touch-screen kiosks, and secure key boxes are critical components to solving challenges faced by fleet managers

In addition to being a company that provides valuable products to the fleet community, we are a company that gives back to our community and worthy causes. A sample of our recent charitable activities includes:

- Year-after-year contributions to the Habitat for Humanity
- A generous donation to the Wounded Warrior Project (our 2012 "Agile Gives Back" recipient)
- Employee contributions to the local blood bank

Agile's Implementation Manager, Phelps, at a Habitat for Humanity build site

7) Provide profiles and an organizational chart for key management, sales management and marketing executives of your company that will oversee and ensure the successful implementation, execution and operation of a Contract resulting from this RFP.

Mr. Ed Smith is the President and CEO of Agile. He leads the team described below.

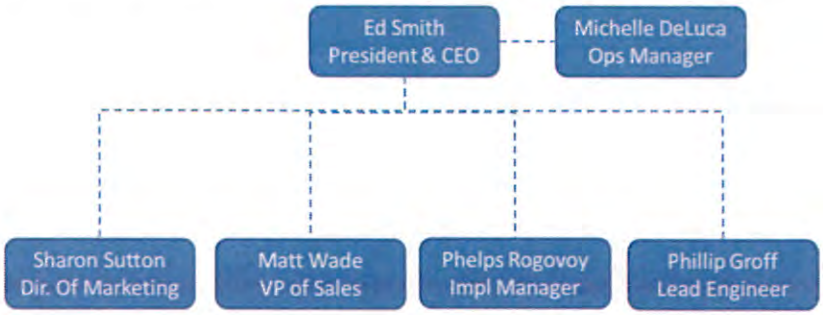

A summary of the key personnel qualifications is provided below:

Resume of Edwin Smith	
	Title: Program Manager **Years of Fleet Technology Experience: 12+** **Years of Work Experience: 28** **Experience Overview:** Mr. Smith leverages his extensive program management and systems engineering background to ensure the success of automated motor pool implementation projects. He is well-versed in all phases of the system design life cycle and strongly emphasizes the requirements engineering phase of each project. He has managed the implementation of more than 30 automated motor pool projects. He is a founder and President of the technology company Agile Access Control, Inc., creator of FleetCommander fleet and motor pool software.
Education	BS, Computer Science. University of Maryland Master's Coursework, Technology Systems Management, University of Maryland University College
Personal Perspective on Solutions Implementation	*"I especially enjoyed implementing automated fleet and motor pool technology for Honda of America. While they had very complex requirements that included integration with 5 external systems, we were able to implement an easy-to-use solution on time and under budget. It's great to see them using the application in their facilities across the U.S."*

Resume of Sharon Sutton

Title: Director of Marketing
Years of Experience in Fleet Technology: 3
Years of Work Experience: 22

Experience Overview:

Leads all marketing activities, including strategic planning for product publicity and promotion, definition, price, and distribution. Also leads customer retention efforts.

Education	B.A. Communications, Virginia Polytechnic Institute & State University
Personal Perspective on Solutions Implementation	*"In the course of my work, I get to interact with our fleet customers, industry experts, representatives from major fleet media companies, and a wide variety of others involved with fleet. My greatest satisfaction comes from customers whose savings and efficiencies have far surpassed their expectations due to the use of our products and services.*

Resume of Matthew Wade

Title: Implementation Support & Senior Engineer
Years of Experience with Fleet Technology: 11+
Years of Work Experience: 28

Experience Overview:

Mr. Wade has more than 10 years of experience working with fleets within state and city governments as well as within the private sector. He has personally been involved with the deployment of our enterprise fleet solutions for more than 50 motor pool operations. He is very familiar with the challenges faced by fleets. He is skilled in project management, requirements elicitation, data gathering, data cleanup and manipulation, and technical support. He is also recognized for his support of training and quality assurance initiatives.

Education	BS, Computer Science, University of Maryland Masters of Science in Business, Johns Hopkins University Master's Certificate, Project Management, George Washington University
Personal Perspective on Solutions Implementation	*"My favorite part of an implementation is when the customer is starting to use FleetCommander and begins to experience all the benefits. It's typically more than they imagined during the sales demonstration. It's extremely satisfying to see the concept of fleet automation become a reality for our customers."*

Resume of Phillip Groff	
	Title: Lead Engineer/Senior Engineer **Years of Experience with Fleet Technology: 8+** **Years of Work Experience: 15** **Experience Overview:** Mr. Groff has more than 8 years of technical experience automating motor pool operations on an enterprise level. He is skilled at identifying high-level requirements within fleet environments, including normalizing data and processes across disparate sites, and overseeing the technical transition to an automated solution. He has personally been involved with the automation of more than 50 motor pools. Mr. Groff is extremely adept at system design and development, network administration, system administration, and security.
Education	BS, Management Information Systems & Decision Sciences Minor: Computer Science, George Mason University
Personal Perspective on Solutions Implementation	*"I find it extremely satisfying to take a fleet accustomed to managing with paper processes and fully automating them with our solution. I particularly enjoy customizing our solution to meet the technical needs of an organization, and enabling them to achieve efficiencies tailored to meet their specific needs."*

Resume of Phelps Rogovoy	
	Title: Implementation Lead/Senior Engineer & Trainer **Years of Experience with Fleet Technology: 3+** **Years of Work Experience: 14** **Experience Overview:** Mr. Rogovoy utilizes his extensive program management, implementation, and training experience to ensure the success of automated motor pool projects. He is well-versed in the functionality of FleetCommander which is key to helping customers get the most out of the application. He has managed the implementation of more than 30 automated motor pool projects and has also helped support more than 65 customers with implementation, customer-specific requests, and training.
Education	BS, Business Administration Salisbury University
Personal Perspective on Solutions Implementation	*"One of my favorite projects was working with the State of Michigan. I got to see firsthand how labor intensive the old motor pool process was for the State. The Fleet Administrators had to follow a multiple step color-coded process to manage the motor pool. Since rolling out FleetCommander, they have been able to completely automate this process and increase their vehicle utilization rate to 90%. They now have FleetCommander deployed at 18 sites across Michigan."*

8) How long has your company been in the "FLEET MANAGEMENT AND RELATED TECHNOLOGY SOLUTIONS", industry?

We have been in the business since September of 2000, i.e. nearly 13 years.

9) Is your organization best described as a manufacturer or a distributor/dealer/re-seller for a manufacturer of the products/equipment and related services being proposed?

We are the manufacturer, i.e., a developer of our core product, Agile FleetCommander. Third-party vendors provide hardware such as secure key boxes and in-vehicle hardware and are used to augment our software solution.

a) If the Proposer is best described as a re-seller, manufacturer aggregate, or distributor, please provide evidence of your authorization as a dealer/re-seller/manufacturer aggregate for the manufacturer of the products/equipment and related services you are proposing.

Not applicable.

b) If the Proposer is best described as a manufacturer, please describe your relationship with your sales/service force and/or Dealer Network in delivering the products/equipment and related services proposed.

Our company is the manufacturer (developer) of our primary product – Agile FleetCommander. This is at the core of our offering via NJPA. Other products offered via Agile, such as touch-screen kiosks, key boxes, and in-vehicle technology are off-the-shelf solutions that are simply added to FleetCommander to increase the total benefit to the end user.

Our sales/service force is internal, i.e. Agile employees.

c) Are these individuals your employees, or the employees of a third party?

Agile employees.

d) If applicable, is the Dealer Network independent or company owned?

Not applicable. All sales staff are Agile employees.

10) Please provide your bond rating, and/or a credit reference from your bank.

Agile has no outstanding debt or long term liabilities. We have an excellent working relationship with our banking partners. Virginia Commerce Bank, our primary bank, is more than happy to attest to the financial health of the company and the positive working relationship we maintain with them.

11) Provide a detailed explanation outlining the licenses and certifications that are both required to be held, and actually held by your organization in pursuit of the commerce and business contemplated by this RFP.

Agile holds the applicable licenses required to be held to do business contemplated by this RFP including:

- California Board of Equalization, Account Number 100980381
- Fairfax County 2013 Business, Professional and Occupational License, Number 340415
- State of California, Certificate of Status, Secretary of State, File Number C2262161

State of California
Secretary of State

CERTIFICATE OF STATUS

ENTITY NAME:

AGILE ACCESS CONTROL, INC.

FILE NUMBER: C3262161
FORMATION DATE: 09/18/2000
TYPE: DOMESTIC CORPORATION
JURISDICTION: CALIFORNIA
STATUS: ACTIVE (GOOD STANDING)

I, DEBRA BOWEN, Secretary of State of the State of California, hereby certify:

The records of this office indicate the entity is authorized to exercise all of its powers, rights and privileges in the State of California.

No information is available from this office regarding the financial condition, business activities or practices of the entity.

IN WITNESS WHEREOF, I execute this certificate and affix the Great Seal of the State of California this day of September 22, 2011.

DEBRA BOWEN
Secretary of State

RXV

2013 BUSINESS, PROFESSIONAL AND OCCUPATIONAL LICENSE 2013
COUNTY OF FAIRFAX, DEPARTMENT OF TAX ADMINISTRATION (DTA)
PHONE: 703-222-8234 TTY: 703-222-7594 WEBSITE: www.fairfaxcounty.gov/dta

AGILE ACCESS CONTROL INC
AGILE ACCESS CONTROL INC
14101 WILLARD RD A
CHANTILLY VA 20151-2934

Notice: This is your 2013 Business, Professional and Occupational License (BPOL). The bottom-half is perforated to allow you to tear off and post this license in your establishment. Please note, if your check is not honored by the bank, this license shall be invalid.

2013 LICENSE INFORMATION

ACCOUNT #:	000-12-1646	LICENSE PERIOD:	01/01/2013 - 03/01/2014
ORDINANCE CODE:	47222-01	LICENSE BASIS:	$270,760
NAICS:	541519	LICENSE RATE:	$.19 per $100
LOCATION:	14101 WILLARD RD A CHANTILLY VA 20151	FED. I.D. OR E.I.N.:	77-0553957
CLASSIFICATION:	BUSINESS SERV OCCUPATION	LICENSE NUMBER:	1340415
DATE PAYMENT RECEIVED:	03/11/2013	INSTALLMENT(S):	

We remain in good standing with all local agencies

12) Provide a detailed explanation outlining licenses and certifications both required to be held, and actually held, by third parties and sub-contractors to your organization in pursuit of the commerce contemplated by this RFP. If not applicable, please respond with "Not Applicable."

Not applicable. All work is performed in-house.

13) Provide all "Suspension or Disbarment" information as defined and required herein. See Section U 9.31.

Not applicable. We have not been subject to suspension or disbarment.

Industry-Marketplace Successes

14) List and document recent industry awards and recognition.

Our team is consistently recognized by our customers for our exceptional level of service and the return on investment that our solution provides. Below is just a small glimpse of recent feedback from our customers:

> *"You have a great team! This is a great partnership. It says something about your product when we can roll FleetCommander out to 9 new DEQ sites without a whimper from them."*
>
> **-- State of Michigan**

"I'd recommend purchasing the FleetCommander product because of its ease of use & excellent customer service. Volusia County does not consider you a vendor; you are a partner. Your product and customer service are awesome."

-- Volusia County, FL

"With FleetCommander, we are now able to collect the utilization data we need to make smart decisions about where to cut or pool vehicles while still enabling our drivers to have access to the vehicles they need to do their work."

-- Central Arizona Project

"It has been going GREAT! I have never been involved in the implementation of a new computer system of any sort that has gone this smoothly. I have never had anything that wasn't responded to in a day. Particularly with questions we've had as the staff has started using the system, it's been great to have a response back to questions so promptly. I really feel that being able to get back to staff with solutions quickly helps with acceptance. I have no idea how you guys do it, but I sure appreciate it."

-- Humboldt County, CA Office of Education

"I have had the honor of working with Phelps, Ian, Matt, and the other well-qualified individuals comprising Agile's staff. They and you have been more than willing to address issues in a very customer-friendly and professional manner. You all have my unwavering appreciation and thanks. To me, your outfit is a great example of "Best Practices" and may well serve as a worldwide model."

-- Richmond Behavioral Health Authority

15) Supply three references/testimonials from customers of like status to NJPA Members to include Government and Education agencies. Please include the customer's name, contact, and phone number.

City of Boise Idaho

Craig Croner; ccroner@cityofBoise.org; (208) 384-3747
Dennis Falconer; dfalconer@cityofboise.org; (208) 344-6549
4833 Dorman Street
Boise, ID 83705

State of Michigan

David Ancell, ancelld@michigan.gov; (517) 322-5051
Manager; DTMB - Vehicle and Travel Services
6951 Crowner Drive
Lansing, MI 48913

"The last few weeks we have had very high utilizations with some Wednesdays operating in the 85% to 95% range with very few turndowns. My downtown staff told me they would never had 100% out in a day with the old reservation book."

-- State of Michigan

Commonwealth of Kentucky (Energy and Environment Cabinet Public Protection Cabinet)

Neal Bruckner, neal.bruckner@ky.gov; (502) 564-2282 x118
500 Mero Street
4th Floor
Frankfort, KY 40601

"I want to sincerely thank you for all your help. Best support around. FleetCommander has been a dream for us. And we get top quality service from Agile customer support."

-- Commonwealth of Kentucky

16) Provide names and addresses of the top five (5) government or education agency customers to include the scope of projects, size of transaction, and dollar volumes from the past three (3) fiscal years.

Top five (5) government or educational customers for the past three (3) fiscal years is as follows:

Customers	Scope	Size of Transaction	3-Year Dollar Volume
DoD (customer name withheld)	fleet management software, car sharing / motor pool kiosks, automated key control boxes	several hundred vehicles managed	$302,404
State of Michigan	fleet management software, car sharing / motor pool kiosks, automated key control boxes	425 fleet vehicles managed	$220,790
Cornell University	fleet management software, car sharing / motor pool kiosks, automated key control boxes, in-vehicle telematics, hosting	355 fleet vehicles managed	$218,083
Guilford County	fleet management software, car sharing / motor pool kiosks, automated key control boxes	692 vehicles managed	$168,341
Sacramento Municipal Utility District	fleet management software, car sharing / motor pool kiosks, automated key control boxes	200 vehicles managed	$164,295

17) Provide documentation indicating the total dollar volume for each of your sales to government, education, and non-profit agencies for the last three (3) fiscal years.

Total sales to government, education, and non-profits are reflected in the table below.

	Total for last 3 fiscal years
Government	$2,077,487
Education	$721,292
Non-Profits	$118,427
	$2,917,205

18) What percentages of your current (within the past three (3) fiscal years) national sales are to the government and education verticals? Indicate government and education verticals individually.

By customer count, government represents 40%. Educational customers represent 34% of our customers.

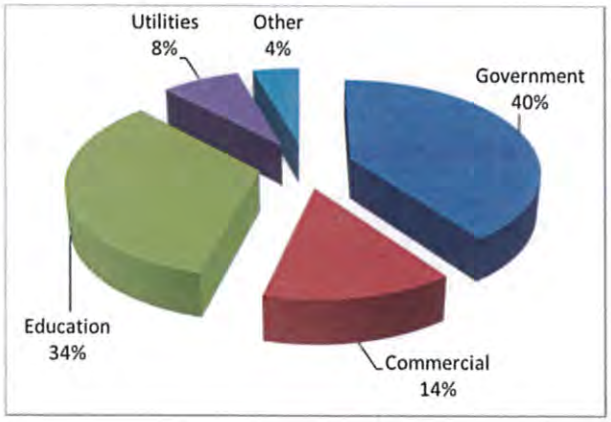

By gross sales, new revenue from government verticals is approximately 85%.

Proposer's ability to sell and service nationwide

19) Please describe your company sales force in terms of numbers, geographic dispersion, and the proportion of their attention focused on the sale and services of the equipment/products contemplated in this RFP?

Agile's sales are through an internal sales team. The team is comprised of 3 full-time sales staff that are dedicated 100% of the time to sales of our fleet management software and related products and services. The team is located in northern Virginia within ten minutes of Dulles airport. Most of our sales are done using on-line web collaboration tools. The sales team travels to sites throughout North America, as needed, to support Sales.

Agile's service team is located throughout the Washington, DC area. Five dedicated staff members support our fleet software, products, and services. As needed, service and support team members are available to travel throughout North America to support customers. In addition, we have technical resources available from our hardware manufacturer to travel worldwide in support of any hardware.

20) Please describe your dedicated dealer network and number of individual sales force within your dealer network in terms of numbers, geographic dispersion, and the proportion of their attention focused on the sales distribution and delivery of your equipment/products and related services contemplated in this RFP?

All of our sales team is internal. See response to question 19.

21) Please describe your dedicated company service force or dedicated network in terms of numbers, geographic dispersion, and the proportion of their attention focused on the sale of the equipment/products and related services contemplated in this RFP?

Agile's service team is located throughout the Washington, DC area. Five dedicated staff members support our fleet software, products, and services. As needed, service and support team members are available to travel throughout North America to support customers. In addition, we have technical resources available from our hardware manufacturer to travel worldwide in support of any hardware.

We partner with a 3rd party hosting company to provide fault tolerant hardware and infrastructure, yet manage our own hardware.

22) Please describe your dedicated dealer service force or network in terms of numbers geographic dispersion, and the proportion of their attention focused on the sale of the equipment/products and related services contemplated in this RFP? Additionally, please describe any applicable road service and do they offer the ability to service customers at the customer's location?

See response to question 21.

23) Describe in detail your customer service program regarding process and procedure. Please include, where appropriate, response time capabilities and commitments as a part of this RFP response and awarded contract.

Agile's standard terms for support are as follows:

> Standard Technical Support Hours of Operation: Agile provides 24 x 7 technical support. A dedicated phone number and email address are used to provide a one-stop shop for all support. One (1) hour response is provided Monday through Friday 7:00 a.m. to 7:00 p.m. Eastern Standard Time, exclusive of federal holidays. A four (4) hour response time is provided at other times. In practice, more than 95% of all calls are answered immediately during standard hours of operation. Outside of standard operating hours, calls are forwarded via our phone routing system and our central email system to all available technicians.

Agile's FleetCommander hosting environment is extremely robust. Since February of 2008, FleetCommander software has experienced no (0 seconds) of unscheduled downtime. That is, FleetCommander's availability has been 100%.

Our advertised unscheduled downtime is 99.9%. We have far exceeded that service level due to:

- A continuous cycle of refreshing our hosting hardware
- Redundancy with respect to hard drives, servers, power, etc.
- Monitoring of all critical resources from an inter-network perspective
- Monitoring of all critical resources from a location external to our hosting network

In the event that we have planned outages for activities such as hardware upgrades, operating system security updates, and more, we send out notice in advance of the outage. Notice is provided as far in advance as is practical; however, 1 – 2 weeks is the average. Outage windows generally occur between 10:00 p.m. and 4:00 a.m.

Satisfied customers are the hallmark of our business. Here is what a few of our Government customers have to say about FleetCommander & Agile:

> *"I'd recommend purchasing the FleetCommander product because of its ease of use & excellent customer service. Volusia County does not consider you a vendor; you are a partner. Your product and customer service are awesome."*
>
> -- Volusia County, FL

> *"I have had the honor of working with Phelps, Ian, Matt, and the other well-qualified individuals comprising Agile's staff. They and you have been more than willing to address issues in a very customer-friendly and professional manner. You all have my unwavering appreciation and thanks. To me, your outfit is a great example of "Best Practices" and may well serve as a worldwide model."*
>
> -- Richmond Behavioral Health Authority

24) Identify any geographic areas or NJPA market segments of the United States you will NOT be fully serving through the proposed contract.

Not applicable.

25) Identify any of NJPA Member segments or defined NJPA verticals you will NOT be offering and promoting an awarded contract to? (Government, Education, Non-profit)

There are no known member segments that we will not be offering and promoting an awarded contract to. Upon award, we will discuss the merits of promoting the NJPA contract to federal customer in light of the fact that our products and services are on GSA IT 70 and a Blanket Procurement Agreement exists for some of our products and services.

26) Describe your off shore contract sales capabilities and requirements. Define any specific requirements or restrictions as it applies to our members located off shores such as Hawaii and Alaska and the US Islands. Address your off shore shipping program on the Pricing form P of this document.

There are no off shore contract sales limitations. A majority of our sales processes use web conferencing and telephone as a means to communicate product and company capabilities.

Agile customers currently exist in Hawaii and Alaska. These customers use Agile software as well has hardware.

Marketing Plan

27) Describe your contract sales training program to your sales management, dealer network and/or direct sales teams relating to a NJPA awarded contract.

All sales representatives are Agile employees headquartered in Chantilly, VA. Incoming sales team members undergo the same training that our customers receive. After becoming proficient with the entire application and our sales processes, refresher training is provided at approximately 6-month intervals and whenever new functionality is released as part of the regularly-scheduled releases.

Due the consultative nature of the sale, we do not sell through dealer networks; however, we do offer a referral program. The referral program is designed to allow our industry partners to identify opportunities to sell FleetCommander and to ultimately pass the referral back to Agile. Training for our referral partners occurs on-line and last approximately two hours.

28) Describe your general marketing program strategy to promote the proposed Contract nationally and ensure success.

We will execute a marketing program to promote the NJPA contract nationally that mirrors the program we have used to promote our GSA IT-70 contract. That is, through a variety of venues, we will promote our product as well as the NJPA contract vehicle which will make the procurement process easy. A variety of tactics are used to create a comprehensive, synergistic marketing approach.

Our multi-faceted marketing program will be modified to include the NJPA message

These are described below.

Press Releases

We regularly release newsworthy information via our press releases. Our email distribution list, which is tailored to target each fleet market segment, has been built over years of experience in the fleet industry. In addition to targeting fleet managers, our press releases are sent to media outlets. Those media outlets routinely pick up our news stories and re-publish them. Below is an example of press releases that are currently posted on Government-Fleet.com.

Sacramento Municipal Utility District Implements New Motor Pool Management System
SACRAMENTO, CA – The Sacramento Municipal Utility District (SMUD) has implemented Agile Access Control's **FleetCommander** fleet and motor pool system to automate its
http://www.government-fleet.com/Channel/Fuel-Management/News/Story/2012/06/Sacramento-Municipal-Utility-District-Implements-New-Motor-Pool-System.aspx

LSU AgCenter Adopts Fleet Management and Motor Pool Software System
approximately 1,000 vehicle reservations each year. LSU AgCenter is using Agile Access Control's **FleetCommander** system, which will save approximately 250 hours of staff time, according to LSU Ag
http://www.government-fleet.com/Channel/Software/News/Story/2012/07/LSU-AgCenter-Adopts-Fleet-Management-and-Motor-Pool-Software-System.aspx

Fleet Managers Eye Hurricane Sandy as She Marches up the East Coast
't be one challenge fleet managers will have to struggle with. Solutions such as Agile Access Control, Inc.'s **FleetCommander** fleet and motor pool software are hosted in a secure, fault-tolerant facility
http://www.government-fleet.com/Channel/GPS-Telematics/News/Story/2012/10/Fleet-Managers-Eye-Hurricane-Sandy-as-She-Marches-up-the-East-Coast.aspx

Humboldt County Office of Education Chooses Fleet & Motor Pool Software
, CA - The Humboldt County, Calif., Office of Education (HCOE) has selected **FleetCommander** fleet and motor pool software to automate the management of its fleet of vehicles. In addition to
http://www.government-fleet.com/Channel/Software/News/Story/2012/02/Humboldt-County-Office-of-Education-Chooses-Fleet-Motor-Pool-Software.aspx

U.S. EPA Selects Motor Pool Management System for Its Region 7 Fleet
Control Inc.'s **FleetCommander** System for Region 7, which managers EPA operations in the states of Iowa, Kansas, Missouri, Nebraska, as well as nine Tribal nations. The EPA's Region 7 fleet
http://www.government-fleet.com/Channel/Software/News/Story/2013/01/U-S-EPA-Selects-Motor-Pool-Management-System-for-Its-Fleet.aspx

Dept. of Homeland Security Using New Motor Pool Management System
headquarters in Washington D.C. DHS is using the **FleetCommander** system to replace the use of paper logs, emails, and phone calls to receive reservations and handle dispatching vehicles. "We can
http://www.government-fleet.com/News/Story/2012/12/Dept-of-Homeland-Security-Using-New-Motor-Pool-Management-System.aspx

As part of our roll-out of the NJPA contract, we plan to issue a press release to all of our media contacts as well as our entire 6,000-name email list, and incorporate reminder emails to our contacts on a regular basis. In addition, we will include NJPA contract announcement and logo as part of our boilerplate marketing materials.

Our Marketing Web site

We will also promote the NJPA contract vehicle via our corporate marketing web site. Note that we routinely feature news in a rotating message on the home page. For example, this month we are touting our donation to the Wounded Warrior Project and our recent win at University of Arkansas. We envision including information about NJPA in our rotating message, as well as the NJPA logo and link to the NJPA website.

We will use our corporate web site as a venue for promoting NJPA.

Speaking Engagements

We are asked to speak as subject matter experts on the topics of fleet right-sizing, car sharing, and more. We envision using these opportunities to promote the NJPA contract vehicle as permitted.

We will use speaking engagements as a venue for promoting NJPA (Ed Smith, Agile's president, shown on left in the picture).

Printed Materials

We will include NJPA promotional information on our printed materials. Below is an example of how we include our GSA IT-70 and GSA BPA on our printed materials.

Trade Shows

We will promote NJPA through the regional and national trade shows that we attend. Our presence ranges from a 10 x 20 booth to a 10 x 30 booth multiple times per year. In addition, we participate in industry webinars and are currently developing our own webinar series targeted toward government and university fleet markets.

29) Describe your marketing material, and overall marketing ability, relating to promoting this type of partnership and contract opportunity. As much as possible, please send examples of your marketing materials in electronic format.

In addition to modifying existing literature to include the NJPA logo and contract information, we are prepared to provide marketing collateral that specifically addresses the benefits of the NJPA contract vehicle.

Examples of some of our existing marketing materials are provided below.

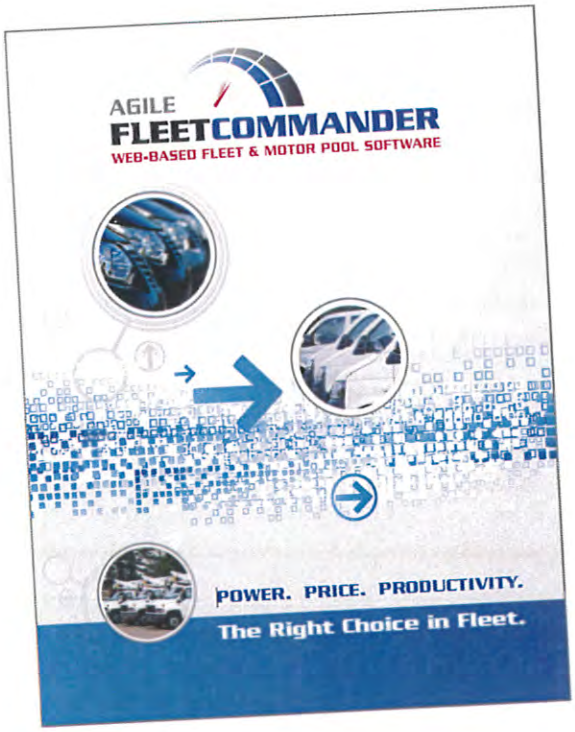

Motor Pool

FleetCommander is recognized worldwide as the leader in motor pool management. The 100% web-based application is used across government, commercial, utility, education, and other markets to right-size fleets while optimizing the use of vehicles and staff. In a nutshell, FleetCommander is the most configurable and easy to use system for maximizing vehicle utilization by sharing.

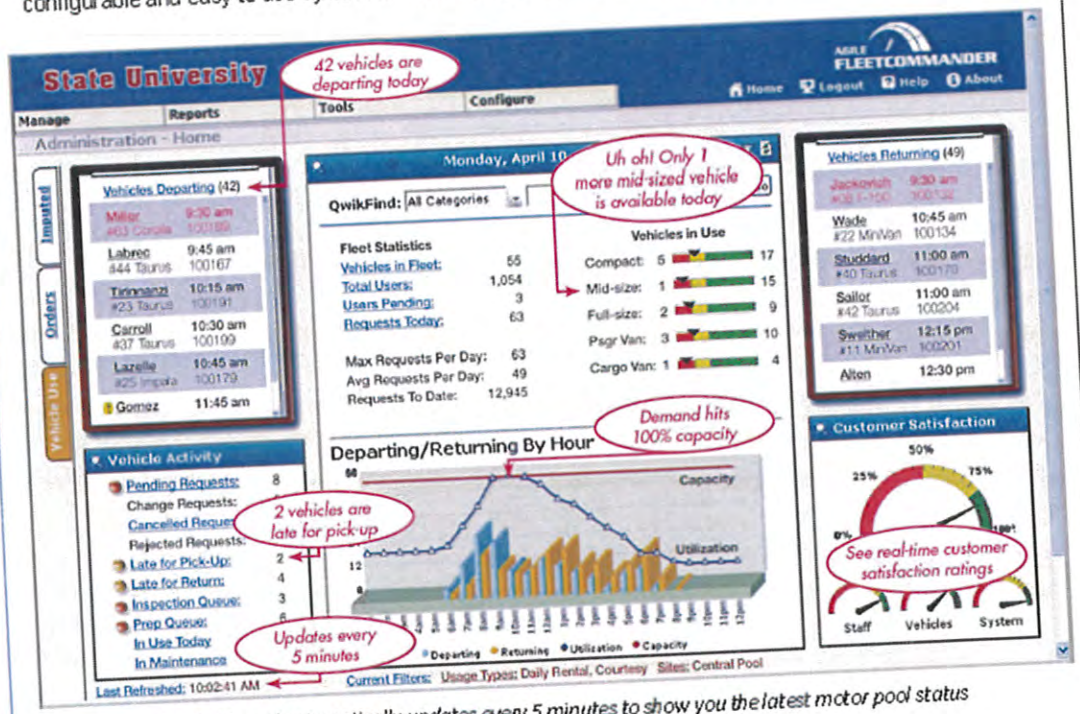

The dashboard automatically updates every 5 minutes to show you the latest motor pool status

Save time and money while increasing driver satisfaction.

- ✓ Setup centralized and/or distributed motor pools in minutes.
- ✓ Configure FleetCommander's on-line reservation forms to meet the unique needs of each site in your enterprise.
- ✓ Facilitate inter-department sharing to reduce the number of vehicles assigned to individuals.
- ✓ Add automated, self-service kiosks to provide 24x7 access to keys and ensure complete accountability.
- ✓ Effortlessly capture the metrics you need to help you right-size your fleet.

AGILE FLEETCOMMANDER
WEB-BASED FLEET & MOTOR POOL SOFTWARE

Now On: GSA Schedule

Fleet Utilization

Looking for ways to cut costs? Start by looking at utilization.

For years, FleetCommander has been a leader in capturing important fleet utilization statistics and presenting that data in easy-to-understand graphs, displays, and reports. The result? Our customers have saved hundreds of thousands of dollars using FleetCommander.

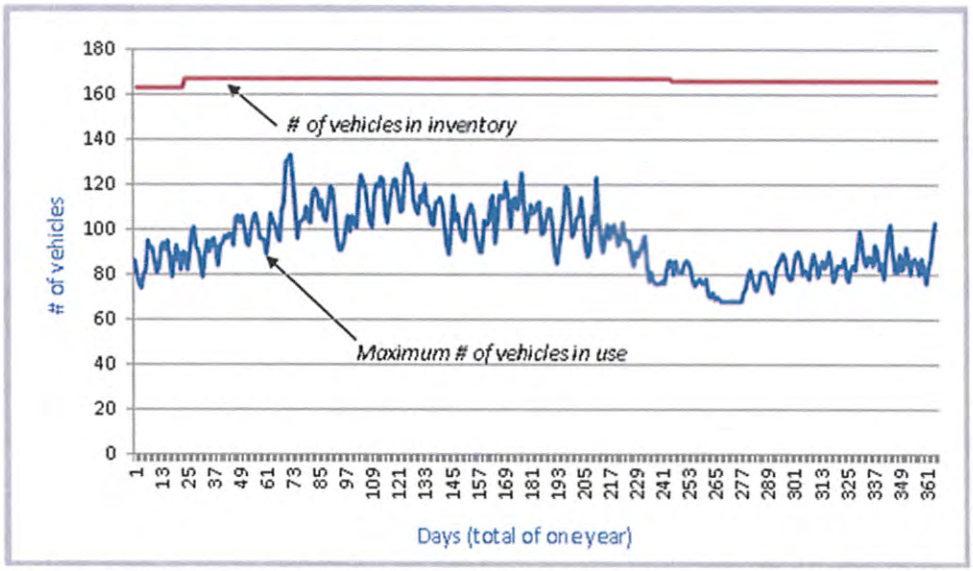

The graph above is from a new FleetCommander customer. FleetCommander helped them identify that vehicle inventory far exceeded the vehicle demand.

FleetCommander helps you analyze utilization statistics by:

- ✓ Automatically capturing trip start/end times via self-service automated kiosks and manual dispatch screens
- ✓ Capturing trip statistics automatically via in-vehicle telematics and GPS solutions
- ✓ Presenting hourly utilization statistics in graphical format on automatically-updating fleet dashboards
- ✓ Generating a variety of fleet utilization reports with the ability to drill-down to see utilization by class of vehicle, by location, and even by how the vehicle was used (e.g. conferences, training, personal). Reports include, but are not limited to:

  - Motor Pool Utilization Report
  - Utilization by Asset Type Report
  - Vehicle Utilization Report
  - Vehicle Demand Report
  - Trip Utilization Report
  - And more!

Now On:

GSA Schedule

(408) 213-9555 • www.AgileFleet.com • Agile Access Control, Inc.

Maintenance

Let FleetCommander streamline your maintenance processes

Tools like FleetCommander's maintenance dashboard do the hard work for you. Watch how the dashboard automatically updates and provides you with a summary of maintenance activities. Need to know more? Just click on nearly any information on the maintenance dashboard and FleetCommander will drill down and provide you with even more information.

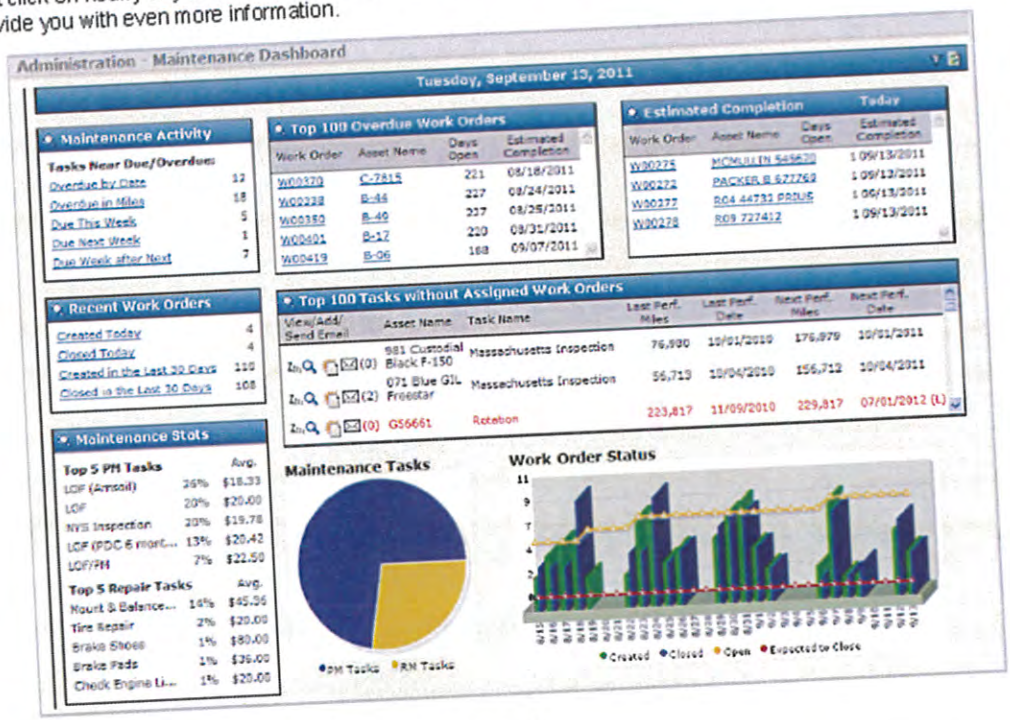

FleetCommander Maintenance tools:

- ✓ Manage work orders for all preventive maintenance (PM), repairs, and other maintenance
- ✓ Automate PM reminders and notifications
- ✓ Capture all maintenance costs and activities
- ✓ Help manage your maintenance centrally, in a distributed fashion, or both!
- ✓ Allow you to view a wide range of reports to highlight key aspects of your maintenance program
- ✓ Track key performance indicators such as ratio of PMs to Repairs and number of overdue tasks
- ✓ Integrate seamlessly with FleetCommander's Parts Management module & external systems

AGILE FLEETCOMMANDER
WEB-BASED FLEET & MOTOR POOL SOFTWARE

Now On:
GSA Schedule

Key Control

Use FleetCommander's self-service kiosk and automated key control to streamline your fleet operations!

Enhance the power of **FleetCommander's** motor pool capabilities even more. Let your fleet drivers access keys to vehicles 24 hours per day... even at remote locations.

Each key is locked in place inside a secure metal cabinet. Drivers with an approved vehicle reservation can pick up the vehicle at authorized times. Drivers can return keys to the system any time. It's secure!

Standard key boxes control 8, 16, 32, 64, or 96 keys. Need more? Let us know.

Here's how it works:

1. Vehicle requests are made and approved using FleetCommander's powerful on-line reservation capability.

2. At the approved departure time, the driver logs in to the key control kiosk. The key box opens up and activates a light next to the authorized key. All other keys remain locked in place. When the key is removed, the dispatch-out time is automatically recorded in FleetCommander.

3. To return a key, login at the kiosk and insert the key in the slot next to the green light. The kiosk will prompt drivers for information such as ending mileage, fuel status, and parking location. And, it all gets recorded by FleetCommander.

What are the benefits?

- ✓ Keys won't disappear any more. Keys are secured and all key transactions are logged.
- ✓ Vehicle pick-ups and returns can happen anytime... not just when your motor pool staff is there.
- ✓ Valuable data is recorded when the keys are picked up or returned. There's no need for extra, duplicated data entry.
- ✓ Motor pool staff can focus on other work rather than managing dispatch functions.
- ✓ Supports remote locations that have little or no staff.

Give us a call today to discuss how FleetCommander's automated key control can help optimize the use of your fleet and your staff.

AGILE
FLEETCOMMANDER
WEB-BASED FLEET & MOTOR POOL SOFTWARE

Wireless Data Collection

In-Vehicle Utilization & Diagnostic Chip

Effortlessly collects accurate date, time, odometer, speed, idling, fuel, trip and mileage data for a clear snapshot of your fleet's utilization

. . . without expensive cellular costs

The FleetCommander Utilization & Diagnostic Chip (UDC) is a low-cost, powerful, wireless plug-and-play device that enables you to accurately and automatically collect the data you need to understand individual vehicle trip detail and the overall utilization of your fleet. No need to rely on drivers to record accurate mileage: the FleetCommander UDC does it automatically, *without requiring expensive monthly cellular charges or subscription fees.*

Approximate size: 1" x 1.5" x 2"

With the FleetCommander UDC invisibly installed in passenger vehicles and light duty trucks, data will be wirelessly collected and forwarded to FleetCommander, enabling you to:

- ✓ Eliminate inaccuracy often associated with reliance on driver input of odometer data.
- ✓ Automatically and accurately collect trip mileage, date, time, duration, and distance.
- ✓ Track fuel used per trip, fuel used for a specific date range, fuel efficiency (moving and idling), and average MPG.
- ✓ Track driver behavior: maximum and average speeds, hard starts & stops, maximum and average RPMs, and idling duration.
- ✓ Generate fleet utilization reports with the ability to drill-down to see utilization and trips by vehicle type, driver, location, department, etc. Reports include:
  - ✓ Trip Detail Report
  - ✓ Trip Utilization Report
- ✓ Requires no professional installation. Installs in seconds by plugging the UDC into the vehicle's OBD II port.
- ✓ Some insurance companies offer up to 15% discount on commercial auto insurance to organizations using in-vehicle telematics.

AGILE
FLEETCOMMANDER
WEB-BASED FLEET & MOTOR POOL SOFTWARE

Agile Fleet SHARE™

Car Sharing technology designed exclusively for the Fleet Industry

Agile Fleet SHARE™

Just scan the secure Agile FleetShare™ card at the windshield of your passenger vehicles & light-duty trucks and go!

Combines the freedom of 24/7 vehicle access offered by consumer-based car sharing – with the power of FleetCommander fleet & motor pool software!

The ONLY car sharing solution of its kind that enables Fleet Managers to:

- Collect driver statistics for fleet right-sizing
- Use on-line reservation form tied to web-based FleetCommander fleet & motor pool software
- Automate billing & bill to proper accounts
- Offer car sharing to users in remote locations or with geographically dispersed vehicles
- Have access to the most powerful fleet right-sizing reports available anywhere
- Offer car sharing in locations with little or no staff.

Benefits of Agile FleetShare™ Car Sharing

- ✓ Helps break down the barriers to sharing vehicles so you can minimize use of assigned vehicles and effectively right-size your fleet.
- ✓ Drivers gain access to vehicles using a proprietary, secure electronic ID card 24 x 7. Just scan card at the vehicle's windshield to gain access. The car is immobilized until a valid card is scanned.
- ✓ All vehicle transactions are securely transmitted via cellular phone signals.
- ✓ Provides an economical solution for locations with only a few vehicles to share.
- ✓ Ensures complete accountability for all vehicle use.
- ✓ Vehicle pick ups and returns can happen anytime... not just when your motor pool staff is there.
- ✓ Valuable data is recorded when vehicles are picked up or returned. There's no need for duplicated data entry.
- ✓ Frees up motor pool staff to focus on other work rather than managing dispatch functions.

Agile FleetShare™ – the leader in car sharing for the fleet industry.

Powered by:

AGILE FLEETCOMMANDER
WEB-BASED FLEET & MOTOR POOL SOFTWARE

GSA IT 70 Contract # GS-35F-0858N
Car Sharing BPA # GS-30F-AA034

Testimonials

At Agile Access Control, Inc., satisfied customers are the hallmark of our business. Here is what a few of our customers in the University community have to say about FleetCommander and Agile:

On Customer Service & Support:

"Impressive... I must say that this response from [Agile] is one of the most comprehensive, informative, and responsible I have yet seen. You have to be working with a great group of people at [Agile Access Control, Inc.]"
– Purdue University

PURDUE UNIVERSITY

UNIVERSITY OF WYOMING

"I was just talking with Carolyn about how well everything seems to be going with the working relationship between Agile & UW Fleet services. I am very pleased on how well things are and have been. You folks there at Agile are Cream of the Crop and we truly appreciate everything." **– University of Wyoming**

"I just want to thank you again - you have been so wonderful to work with and genuinely care about our being happy with your product." **– Illinois State University**

ILLINOIS STATE Redbirds

Cornell University

"As always, it has been a pleasure doing business with you guys. Thanks for all your help. You guys rock!"
– Cornell University

"The folks over there at Agile are amazing. I tease Matt Wade all the time that he signed us up for lifetime tech support whether he likes it or not. Whenever we have encountered a problem, or even just an 'I wonder if we can...', I can call or email these guys." **– University of the Cumberlands**

UNIVERSITY OF THE CUMBERLANDS CUMBERLAND COLLEGE

AGILE FLEETCOMMANDER
WEB-BASED FLEET & MOTOR POOL SOFTWARE

(408) 213-9555 x1 • www.AgileFleet.com • Agile Access Control, Inc.

State and Local
GOVERNMENT
Case Study
SNAPSHOT

AGILE
FLEETCOMMANDER
WEB-BASED FLEET & MOTOR POOL SOFTWARE
The Right Choice in Government Fleet.

Just the Facts

Who

The State of Michigan

About the Fleet

- ✓ 424 vehicles
- ✓ Serves 4,925 end-users
- ✓ Handles 150+ vehicle requests per day
- ✓ State Fleet Managers oversee motor pools throughout the state from one central location
- ✓ Uses graphical dispatching
- ✓ Utilizes unstaffed, secure key control
- ✓ Standardized utilization reporting state-wide
- ✓ Expansion to other Michigan cities is planned for 2013, bringing the total number of Michigan sites to 18. Two more are slated for future years.

State of Michigan

Since launching FleetCommander fleet and motor pool solutions in 2010, the State of Michigan has significantly reduced costs and number of vehicles, changed driver behavior, and now consistently achieves utilization rates above 90% across nearly every site in their fleet.

In 2013, Michigan expanded the deployment of FleetCommander to Grand Rapids, bringing the total to 18 sites across the state as part of its very successful and comprehensive cost-cutting initiative. In addition, the cities of Traverse City, Lansing, and Flint will deploy FleetCommander secure key control technology as more vehicles enter the fleet and different departments pool their vehicles.

FleetCommander technology enables the state's fleet managers to oversee operations from one centralized location in Lansing while achieving 100% accountability of all access to vehicles, despite having motor pools located throughout Michigan.

Each of the 18 locations uses a self-service motor pool kiosk; six of those pair the kiosk with FleetCommander's key control hardware that provides secure, automated, round-the-clock access to vehicles.

Agile's President Ed Smith said the company shares Michigan's vision for more efficient and flexible motor pools. "We're thrilled about the State of Michigan's success with FleetCommander and its recent expansion. Ten years ago, who could have imagined that a fleet manager sitting in Lansing, Michigan could see the status of each fleet located throughout the state in real-time, and even hand out and collect keys with no staff on-site? That's cool stuff!"

The roll-out of motor pool technology is part of Michigan's comprehensive effort to slash costs and change driver behavior across the state.

Continued...

30) Describe your use of technology and the internet to provide marketing and ensure national contract awareness.

Agile uses a variety of technologies to provide marketing and ensure national awareness of contract vehicles and product features and benefits. These technologies include, but are not limited to:

1. Press releases using the online Constant Contact email marketing tool with a reach of nearly 6,000 contacts in the fleet industry
2. Regular media coverage, specifically on-line fleet-related sites such as *Government Fleet*, as well as industry publications such as *FleetSolutions*, the publication of NAFA, and *Green Fleet*.
3. Speaking engagements and feature articles
4. Newsletters
5. Print ads
6. Online Google ads
7. Web presence
8. Our web site
9. Social media presence

These are described in the sections below.

Press Releases

We routinely send out press releases. These are distributed to targeted email lists that are segmented by fleet market space.

Media Coverage

We maintain relationships with media outlets and ensure that our press releases and articles are picked up in venues with a large distribution. In addition to print advertising in major fleet publications, we get frequent coverage on-line via our press releases.

✓ Consistent Coverage in Government Fleet enews & magazine

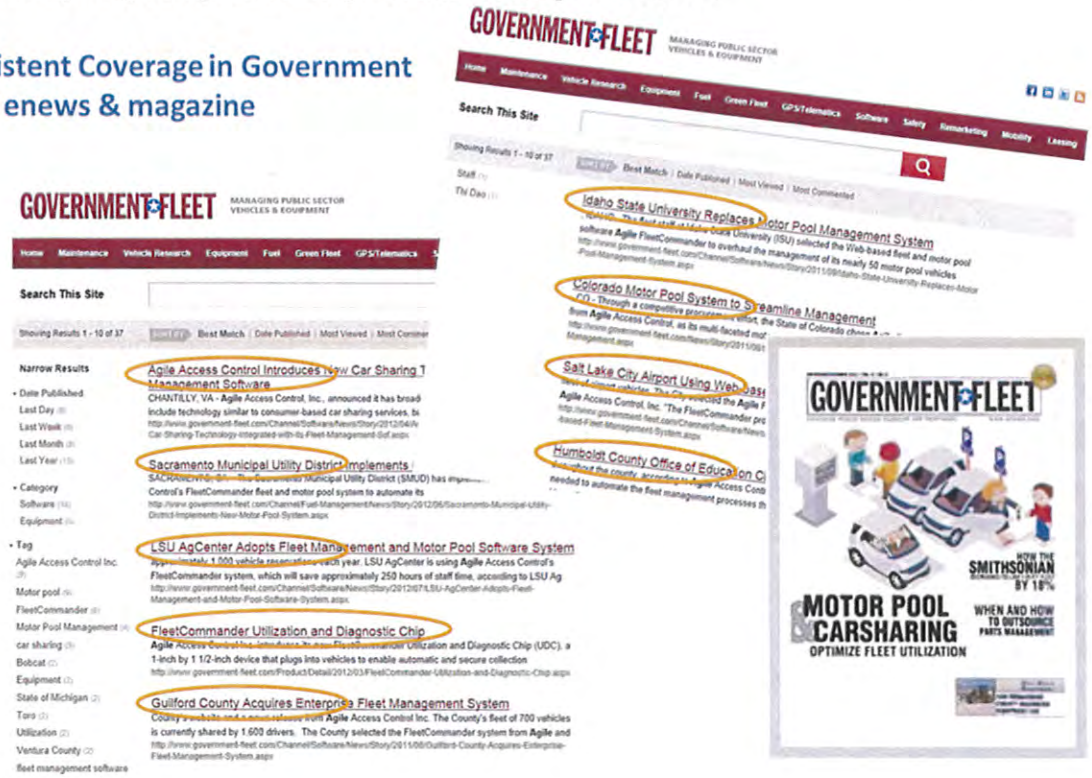

Speaking Engagements and Feature Articles

We are considered subject matter experts and are often quoted in industry publications, invited as guest speakers or authors of feature articles. Such engagements and interviews are opportunities to promote tools such as the NJPA. Venues that we use to promote our products and services, and potentially the NJPA tools, include meetings and events sponsored by NAFA, Government Fleet Expo, numerous articles and frequent news items in Government Fleet Magazine, NCSFA events, and in featured articles in Fleet Solutions magazine, to name a few.

✓ Positioning as Right Size SME Through Ads & Articles

Newsletters

We send regular newsletters to customers, prospective customers and selected vendors. We have a very targeted list of nearly 6,000 contacts in the fleet industry via email addresses that we have maintained and continue to grow over the years.

Web Presence

We have a healthy web presence. We use search engine analysis and optimization to maximize the effectiveness of our web site. In addition, we regularly advertise online via Google Adwords campaigns to drive traffic to our website.

Web Site

We have a web page that contains regularly-updated content.

31) Describe your perception of NJPA's role in marketing the contract and your contracted products/equipment and related services.

We feel NJPA will become an integral part of our marketing machine and our sales culture. Using the NJPA contract vehicle, and expertise gained from NJPA resources and other NJPA vendor partners, we anticipate our sales will grow significantly. Specific advantages we envision from partnering with NJPA include NJPA's ability to:

- Promote the NJPA brand so that buyers are familiar with the value of the NJPA contract vehicle.
- Promote our products and services for K-12, higher education, local and state level government through venues such as the NJPA web site and other NJPA marketing efforts.
- Jointly announce new contact wins that have been placed through the NJPA contract vehicles.
- Educate our team on how to sell and promote the NJPA contract vehicle.
- Make introductions to other NJPA vendors as well as NJPA members.

32) Describe in detail any unique marketing techniques and methods as a part of your proposal that would separate you from other companies in your industry.

Our team has been very successful in building a relationship with media outlets that have a broad reach to the fleet industry. In addition to ghost writing articles that have appeared in nationally-distributed venues, we have been interviewed for articles as subject matter experts and we have regularly had major fleet web sites pick up our press releases for distribution to larger audiences. Below is a sample of our press release coverage by Bobit Publishing at www.government-fleet.com.

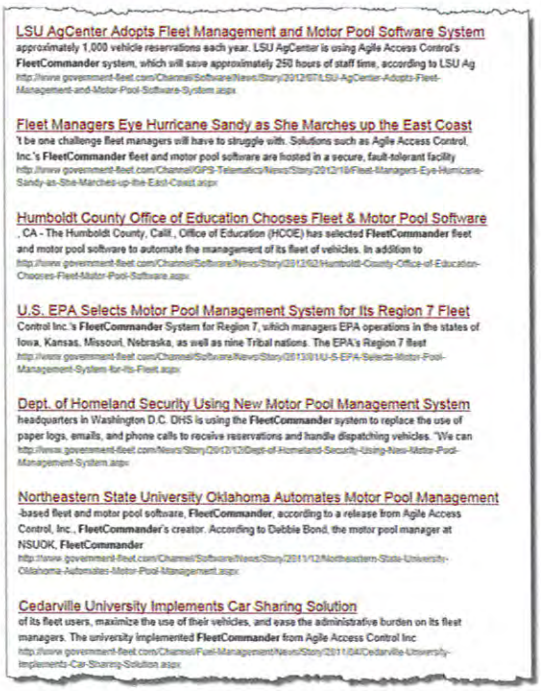

LSU AgCenter Adopts Fleet Management and Motor Pool Software System
approximately 1,000 vehicle reservations each year. LSU AgCenter is using Agile Access Control's **FleetCommander** system, which will save approximately 250 hours of staff time, according to LSU Ag
http://www.government-fleet.com/Channel/Software/News/Story/2012/07/LSU-AgCenter-Adopts-Fleet-Management-and-Motor-Pool-Software-System.aspx

Fleet Managers Eye Hurricane Sandy as She Marches up the East Coast
'l be one challenge fleet managers will have to struggle with. Solutions such as Agile Access Control, Inc.'s **FleetCommander** fleet and motor pool software are hosted in a secure, fault-tolerant facility
http://www.government-fleet.com/Channel/GPS-Telematics/News/Story/2012/10/Fleet-Managers-Eye-Hurricane-Sandy-as-She-Marches-up-the-East-Coast.aspx

Humboldt County Office of Education Chooses Fleet & Motor Pool Software
, CA - The Humboldt County, Calif., Office of Education (HCOE) has selected **FleetCommander** fleet and motor pool software to automate the management of its fleet of vehicles. In addition to
http://www.government-fleet.com/Channel/Software/News/Story/2012/02/Humboldt-County-Office-of-Education-Chooses-Fleet-Motor-Pool-Software.aspx

U.S. EPA Selects Motor Pool Management System for Its Region 7 Fleet
Control Inc.'s **FleetCommander** System for Region 7, which managers EPA operations in the states of Iowa, Kansas, Missouri, Nebraska, as well as nine Tribal nations. The EPA's Region 7 fleet
http://www.government-fleet.com/Channel/Software/News/Story/2013/01/U-S-EPA-Selects-Motor-Pool-Management-System-for-Its-Fleet.aspx

Dept. of Homeland Security Using New Motor Pool Management System
headquarters in Washington D.C. DHS is using the **FleetCommander** system to replace the use of paper logs, emails, and phone calls to receive reservations and handle dispatching vehicles. "We can
http://www.government-fleet.com/News/Story/2012/12/Dept-of-Homeland-Security-Using-New-Motor-Pool-Management-System.aspx

Northeastern State University Oklahoma Automates Motor Pool Management
-based fleet and motor pool software, **FleetCommander**, according to a release from Agile Access Control, Inc., **FleetCommander**'s creator. According to Debbie Bond, the motor pool manager at NSUOK, **FleetCommander**
http://www.government-fleet.com/Channel/Software/News/Story/2011/12/Northeastern-State-University-Oklahoma-Automates-Motor-Pool-Management.aspx

Cedarville University Implements Car Sharing Solution
of its fleet users, maximize the use of their vehicles, and ease the administrative burden on its fleet managers. The university implemented **FleetCommander** from Agile Access Control Inc
http://www.government-fleet.com/Channel/Fuel-Management/News/Story/2011/04/Cedarville-University-Implements-Car-Sharing-Solution.aspx

Our press releases are routinely picked up by Government Fleet magazine and other nationally-recognized fleet venues.

33) Describe your company's Senior Management level commitment with regards to embracement, promoting, supporting and managing a resultant NJPA awarded contract

Agile's senior management team is poised to fully embrace, promote and support the NJPA awarded contract. It is envisioned that the NJPA contract vehicle will be a primary vehicle through which our products and services are offered.

> *"I am excited to have the power of NJPA behind us and to be able to help grow NJPA's product offering to its customer base. We are committed to this. As someone that worked in a federal contracting office for several years, I appreciate the value that NJPA brings to the table for vendors and members alike."*

Ed Smith
President
Agile Access Control, Inc.
(408) 213-9555 x501

34) Do you view your products/equipment applicable to an E-procurement ordering process? Yes/ No.

No. As our product is so highly configurable, and the sales process is so consultative, we feel ordering via an Agile sales representative is the most effective process for Agile and the prospective customer.

35) If yes, describe examples of E-procurement system(s) that your products/equipment was available through. Demonstrate the success of government and educations customers to ordering through E-procurement.

Not applicable.

36) Please describe how you will communicate your pricing and pricing strategy to your sales force nationally?

Agile's pricing strategy is communicated via a standard set of tools we call the "pricing configurator". Changes in pricing are reviewed bi-weekly at the regularly scheduled sales force meetings.

Other Cooperative Procurement Contracts Held

37) Identify all cooperative contracts hosted by any government or education agency or government or education cooperative or by a third party marketing company, which are marketed in more than one state, held or utilized by the Proposer.

The only other type of *cooperative* contract used to promote FleetCommander is GSA schedule and our GSA BPA. This does not appear to meet the definition of cooperative contracts as defined by NJPA.

38) What is the annual dollar sales volume generated through each of the contract(s) identified in your answer to the previous question.

Not applicable.

39) Identify awarded WSCA or specific state procurement contracts held or utilized by the Proposer with any State of the United States.

Agile currently holds state procurement contracts with:

- Commonwealth of Kentucky
- State of Michigan
- State of West Virginia
- State of Colorado

40) What is the annual combined dollar sales volume for each of these contracts?

Annual combined dollar sales varies from year to year. Sales exceed $100,000.

41) Identify any GSA Contracts held or utilized by the Proposer.

A majority of our products and services are available via GSA's IT 70 contract as well as a GSA blanket procurement agreement. These are sold via a reseller partner (holder of the GSA schedule), Government Marketing & Procurement, LLC.

GSA

IT 70 Contract # GS-35F-0858N

Car Sharing BPA # GS-30F-AA034

42) If you are awarded the NJPA contract, are there any market segments or verticals (e.g., higher education, K-12 local governments, non-profits etc.) or geographical markets where the NJPA contract will not be your primary contract purchasing vehicle? If so, please identify those markets and which cooperative purchasing agreement will be your primary vehicle.

The only market segment we feel we may not use NJPA as the primary contract vehicle is the federal government. It is our understanding that the federal government's procurement processes would favor GSA schedule.

43) If you are awarded the NJPA contract, is it your intention and commitment to lead with your NJPA contract? X Yes ____ No Explain and demonstrate your commitment and/or restrictions.

Yes. It is in our best interest to use the NJPA contract to expedite time-to-implement and eliminate potential competition offered through a conventional RFP process.

44) Identify a proposed administrative fee payable to NJPA for facilitation, management and promotion of the NJPA contract, should you be awarded. This fee is typically calculated as a percentage of Contract sales and not a line item addition to the customers cost of goods.

We propose a 2.75% administrative fee payable to NJPA.

Value-Added Attributes

45) If applicable, describe any product/equipment training programs available as options for NJPA members. If applicable, do you offer equipment operator training as well as maintenance training?
X Yes ____ No

A variety of training is provided to support the products and services available via the NJPA contract vehicles. These include:

General web teleconferences – Available for prospective customers that are interested in learning about FleetCommander.

System Administrator Training – This is targeted toward the fleet staff responsible for managing the fleet software.

Technical / Network Administrator Training – This is targeted toward technical staff that is responsible for managing the technical components of the fleet solution, if required. Note that customers that use Agile's hosted solution and do not have hardware will not require this type of training.

End-user Training – Train-the-trainer training can be provided to assist in getting end-users trained on the fleet technology. Note that the design of FleetCommander is such that end-user training is often not required. Rather, a "Welcome email" generated from FleetCommander, sends easy-to-understand instructions and training guidance.

Refresher Training – Refresher training, on any topic, can be provided on an as-needed basis.

46) Is this training standard as a part of a purchase or optional?

Training is optional and is broken out as a separate line item. This provides for flexibility to meet the unique needs of each customer.

47) Describe current technological advances your proposed equipment/products and related services offer.

Our company offers a wide variety of technological advances to the fleet industry. These include, but are not limited to:

1) The most comprehensive and advanced car sharing, motor pool, and right-sizing tools available to fleet. New features are released continuously.
2) Web-based fleet management tools available in a SaaS or customer-hosted model, including:
    - Maintenance
    - Parts Inventory
    - Fuel Management
    - Risk Management
    - Driver Management
    - Mileage Collection
    - Policy Communication and Enforcement
    - And more
3) Innovative, real-time fleet status via automatically-updating fleet dashboards
4) Wireless, automated odometer collection hardware
5) In-vehicle car sharing hardware

These are described below.

Comprehensive Car Sharing, Motor Pool, and Right-sizing Tools

Many fleet experts will attest that the largest efficiency gains in fleet can be realized by sharing of vehicles using car sharing, motor pool, and right-sizing tools. The details and strengths of our advanced technologies are described below in the context of the three key ingredients of any car sharing initiative:

These three ingredients are discussed below.

1. Scheduling / Coordinating Use of Vehicles

Drivers have the ability to log in to FleetCommander to make a reservation without administrator involvement. Users can make reservations for themselves or, if authorized, for other users. Alternatively, a variety of tools exist to let authorized administrative staff make requests on behalf of a driver.

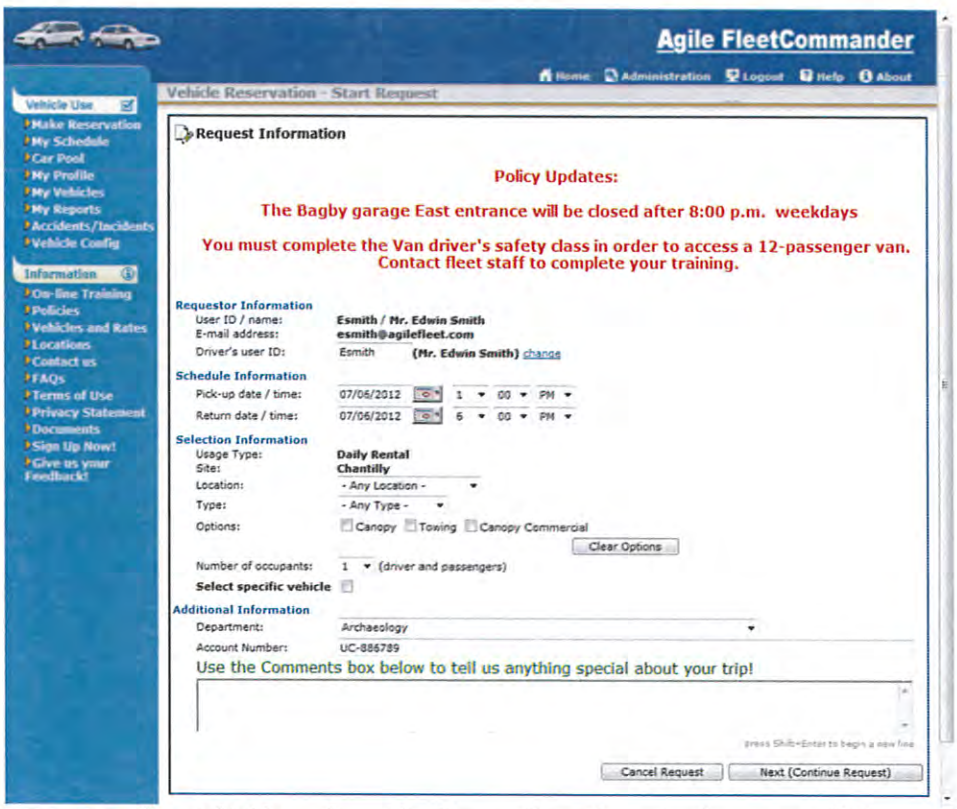

The on-line reservation form is highly configurable. Fleet staff can determine the content of help text (shown at top of page), which fields appear on the form, and even which fields are required.

FleetCommander forms such as the vehicle request form can be configured to meet the unique needs of a facility, a sub-location at a facility, specific drivers and specific vehicles. For example, some drivers may be able to select a specific vehicle while others may be automatically given the "best vehicle" that meets their criteria. The definition of "best vehicle" is determined by your fleet staff using FleetCommander's system administrative interface.

Examples of powerful features that set FleetCommander apart include, but are not limited to, features of the reservation process:

Usage Types - Usage types allow a customer to define the *types* of reservations that can be made. For example, a customer may have daily rental, long-term lease, maintenance, and courtesy reservation types. The reservation form can change according to the usage type. Each user's access can be limited to certain usage types and billing for reservations can be configured by usage type, vehicle location, and vehicle type.

Access Groups - FleetCommander uses the concept of access groups for policy enforcement to keep users and vehicles together or to keep them apart. Access groups are usually created to make sure users without proper training or the proper driver's license are not given access to vehicles they should not be driving. For example, the agency may require training before a user can drive a 15-passenger van. An access group entitled "15-pass van" can be created. This access group will appear in both the vehicle and user profiles. If it is not checked in a user's profile (indicating the user has not completed training), then FleetCommander will not allow a 15-pass van to be assigned to the user.

FleetCommander can be setup to automatically assign vehicles to requests and/or automatically approve requests. Regardless of the approval method, upon approval, a fully-customizable confirmation email can be automatically sent to the driver and others with a need-to-know.

As with other FleetCommander features, the content of reservation confirmation emails can be completely customized by authorized users.

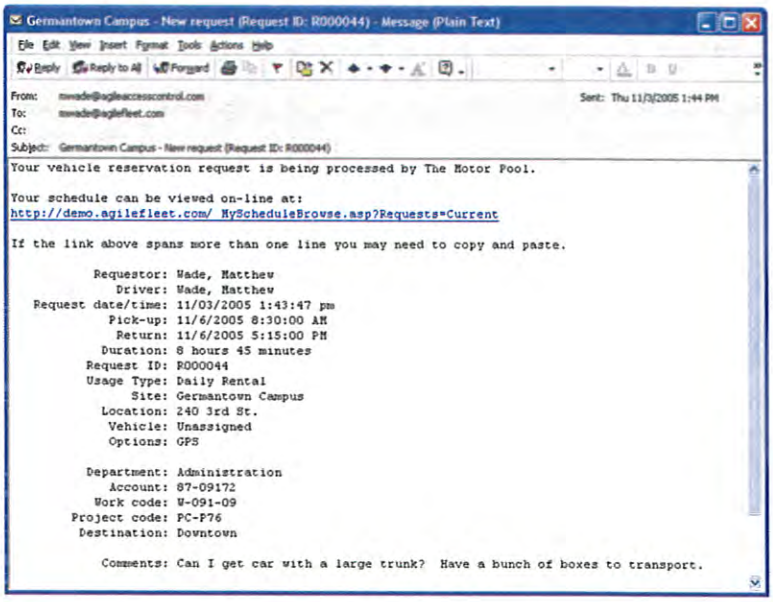

The users can always view their reservations by clicking on the My Schedule link in the left navigation.

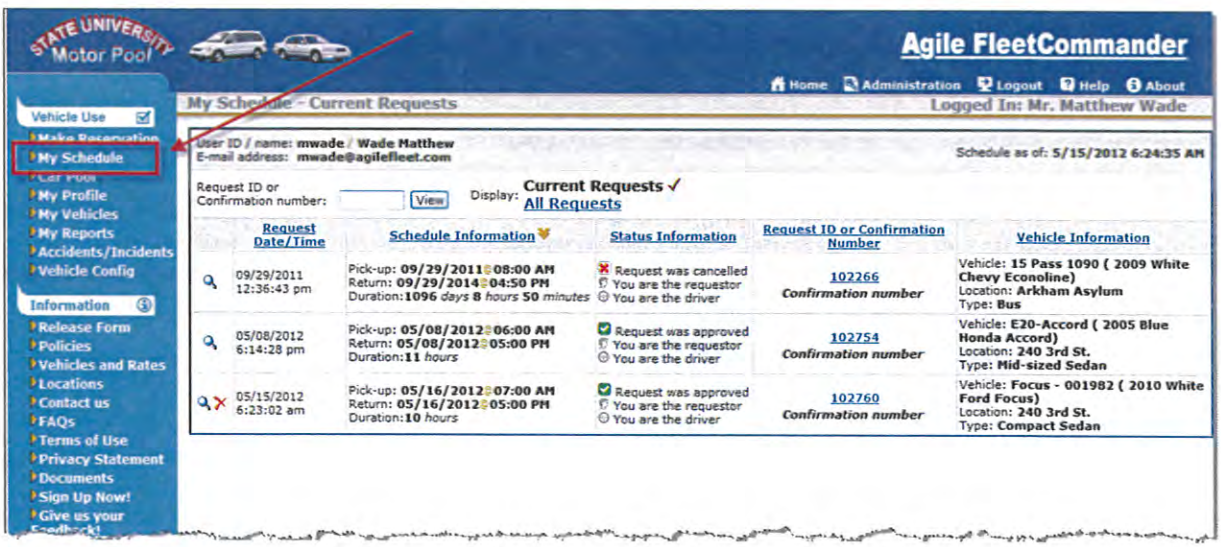

Providing the tools for fleet users to help themselves saves time for dedicated fleet staff. Allowing users to view, cancel, or request changes to reservations without Administrator assistance is user-friendly and reduces fleet manpower.

In addition to the above methods for scheduling vehicles, there are many other methods including the ability for authorized drivers to make requests right at the secure key location. It's the flexibility that will determine the acceptance of the solution.

2. Dispatching Vehicles (pick-up and drop-off keys)

FleetCommander is a highly flexible, unique car sharing application with regard to dispatching options. NO OTHER FLEET SOLUTION OFFERS THE VARIETY OF DISPATCHING METHODS REQUIRED TO EFFECTIVELY SHARE ACROSS ALL TYPES OF FLEETS. FleetCommander has options for 1) A desktop user interface for manual dispatching by fleet staff, 2) Centralized self-service kiosks which do not involve secure key control, 3) A self-service dispatching using a key box, and 4) even a solution for dispatching by swiping a badge at a vehicle's windshield.

Staffed dispatching using the automatically-updating fleet dashboard

Dispatching via a centralized self-service kiosk

Secure dispatching using a kiosk and secure key control

Dispatching at the vehicle by swiping a badge at the vehicle's windshield

No other vendors offer the variety of dispatching options needed to meet the needs for disparate segments of a fleet

Fleet organizations are not one-dimensional when it comes to the use of shared vehicles. Most organizations require a variety of options for scheduling and almost always require multiple types of dispatching to meet the unique needs of each segment of their fleet. The single product solution we propose provides many benefits to fleet drivers and fleet managers, including:

1. Access to a single solution rather than multiple, disparate systems when different types of car sharing options are needed.
2. Consistency in how vehicles are scheduled regardless of how the vehicles are dispatched.
3. Consistency in how policies are communicated and enforced, regardless of how the vehicles are ultimately dispatched.
4. Maintaining vehicle and driver data in one car sharing system.
5. Comprehensive reporting from one system rather than requiring manual collation of data retrieved from a multi-vendor solution.

Our solution uses a full-color, touch-screen display at the key box as opposed to other vendors' solutions which use a small, monochrome display and push button keyboard. User acceptance and ease-of-use are perhaps the two biggest factors that will determine whether car sharing will be readily accepted by administrators and drivers alike. Our user experience mirrors that of a kiosk used at an airport to check-in and get a boarding pass. That concept is accepted, for example at airports, for a good reason – it is intuitive and easy to use. The screen below is an example of the user interface that is part of our solution in lieu of the small display on the key box offered by other vendors. The example below shows what a user sees when he/she returns keys to a vehicle.

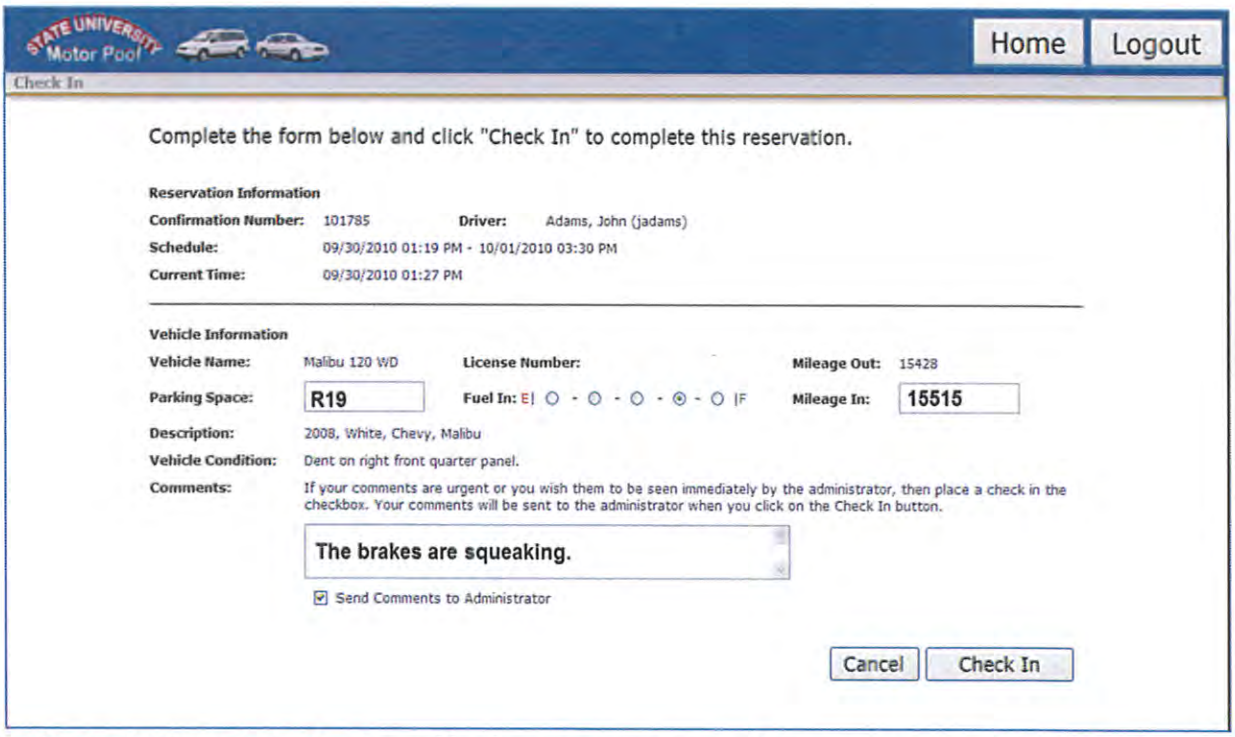

The full-color display at the key box is capable of communicating more information to the user at the time keys are picked up and dropped off. And, more information can be collected from the user. It's easy and intuitive compared to a monochrome display and a numeric keypad.

3. Reporting and On-Line Metrics

There are more than forty (40) standard reports that are part of FleetCommander. Each FleetCommander report has a filter page to help reveal just the data you are looking for. A list of reports includes, but is not limited to:

Statistics Reports:	User Reports:	Asset Reports:	Reservation Reports:
Summary	User Summary	Asset Summary	Reservation Summary
Vehicle Usage	User Details	Asset Details	Reservation Details
Motor Pool Utilization (MPU)	User Details Extra	Asset Data Dump	Reservation Details Extra
MPU By Asset Type	Driver Eligibility	Asset In/Out	Completed Reservations
Vehicle Demand	Department Summary	Tag/Vehicle Exception	Detailed Billing
Aging By Miles	Driver's License	Owner/Responsible Asset	Usage By Department
Aging By Time	Currency	Summary	Missing Mileage
Feedback	Lost and Found	Inspections	Late Return
System	User Citations	Prep	Cancellations
Audit Log	Human Resources		Travel Sheet
	User System Activity		Vehicle Availability
			Kiosk

Sample reports are shown below.

Motor Pool Utilization Report - By Asset Type (% of vehicles used)

Day of Month	30	1	2	3	4	5	6	7	8	9	10	11	12	13	Average
	T	W	R	F	S	S	M	T	W	R	F	S	S	M	
Car	63	83	50	67	100	17	50	67	50	80	60	20	40	40	56.13
Car/Hybrid	38	63	88	50	38	38	50	50	25	13	63	63	63	63	50.00
SUV - 5 passenger	14	0	0	0	0	14	57	43	14	0	29	29	29	43	19.39
Van - 7 passenger	50	67	0	50	50	0	50	50	0	0	0	0	0	0	22.62
Van - 8 passenger	29	29	8	46	23	0	0	0	0	15	23	23	31	46	19.47
Van (ADA compliant)	0	0	0	0	0	0	0	0	0	0	0	0	0	0	0.00
Van (Equipment)	0	100	100	100	0	0	100	100	100	100	0	0	100	0	57.14
Average	32	42	29	39	32	12	32	32	17	20	33	28	35	40	30.08

The "Motor Pool Utilization Report – By Asset" report helps right-size and identify the right mix of vehicles

Vehicle Demand Report

Date	Vehicles Leaving	Vehicles Returning	Total Vehicles in Use	Max Vehicles at One Time	Capacity
02/13/2008	7	11	13	13	56
02/14/2008	13	1	15	15	56
02/15/2008	13	11	27	26	56
02/16/2008	0	9	16	16	56
02/17/2008	0	2	7	7	56
02/18/2008	13	5	18	16	56
02/19/2008	13	9	26	25	56
02/20/2008	5	9	22	19	56
02/21/2008	15	11	28	24	56
02/22/2008	15	10	32	32	56
02/23/2008	0	7	22	22	56
02/24/2008	0	4	15	15	56
02/25/2008	6	4	17	14	56
02/26/2008	3	6	16	16	56

The Vehicle Demand Report (Utilization Report) shows capacity versus demand.
All reports can be exported to Excel and/or graphed.

Vehicle Usage Report

Vehicle	Elapsed Days	Total Days Used	% Days Used	Total Hours Used	Total # of Trips	Avg Trip Per Day	Total Miles	Average Miles Per Trip
E07058	31	16	51.61%	177	13	0.42	703	54
E07059	31	10	32.26%	106	8	0.26	284	36
E07060	31	16	51.61%	115	14	0.45	593	42
E07062	31	14	45.16%	165	9	0.29	411	46
E07065	31	18	58.06%	83	14	0.45	496	35
E07067	31	22	70.97%	331	11	0.35	430	39
E08080	31	24	77.42%	375	11	0.35	870	79
E08089	31	14	45.16%	195	9	0.29	449	50
E08090	31	21	67.74%	325	11	0.35	751	68
E08093	31	0	0.00%	0	0	0.00	0	0
	310	155.00	50.00%	1,872	100	0.32	4,987	49.87

Analyzing utilization for each specific vehicle can reveal underutilized vehicles

Web-based Fleet Management

FleetCommander is a 100% web-based fleet management solution. Web-based fleet management tools, available in a SaaS or customer-hosted model, include:

a. Maintenance – Work order system to keep track of all preventive maintenance and repairs, including costs.
b. Parts Inventory – Keep track of parts as they are assigned to work orders, ordered, etc.
c. Fuel Management – Keep track of all fuel records received from your fuel vendor.
d. Risk Management – Track all incidents/accidents along with the root cause of accidents. Mange subrogation processes.
e. Driver Management – Keep track of drivers, driver compliance, training, citations, access to vehicles, etc.
f. Mileage Collection – Collect odometer values through a variety of means, including at a kiosk, via on-line forms, and more. Mileage is automatically mapped to a vehicle's master record and maintenance reminders are automatically triggered.
g. Policy Communication and Enforcement – This is one of the most important functions of fleet. FleetCommander communicates and enforces dozens of different fleet policies.
h. And more

Real-time Fleet Status

Dashboards found in FleetCommander provide real-time status updates of different aspects of the fleet… without the need to go hunting for the information. The automatically-updating fleet dashboard provides authorized fleet staff with the current status of the fleet. In addition to showing vehicles that are departing and returning for the day, critical fleet activities such as late pickups and late returns are shown. To access more data, users can click on nearly any field on the dashboard to drill down to more information.

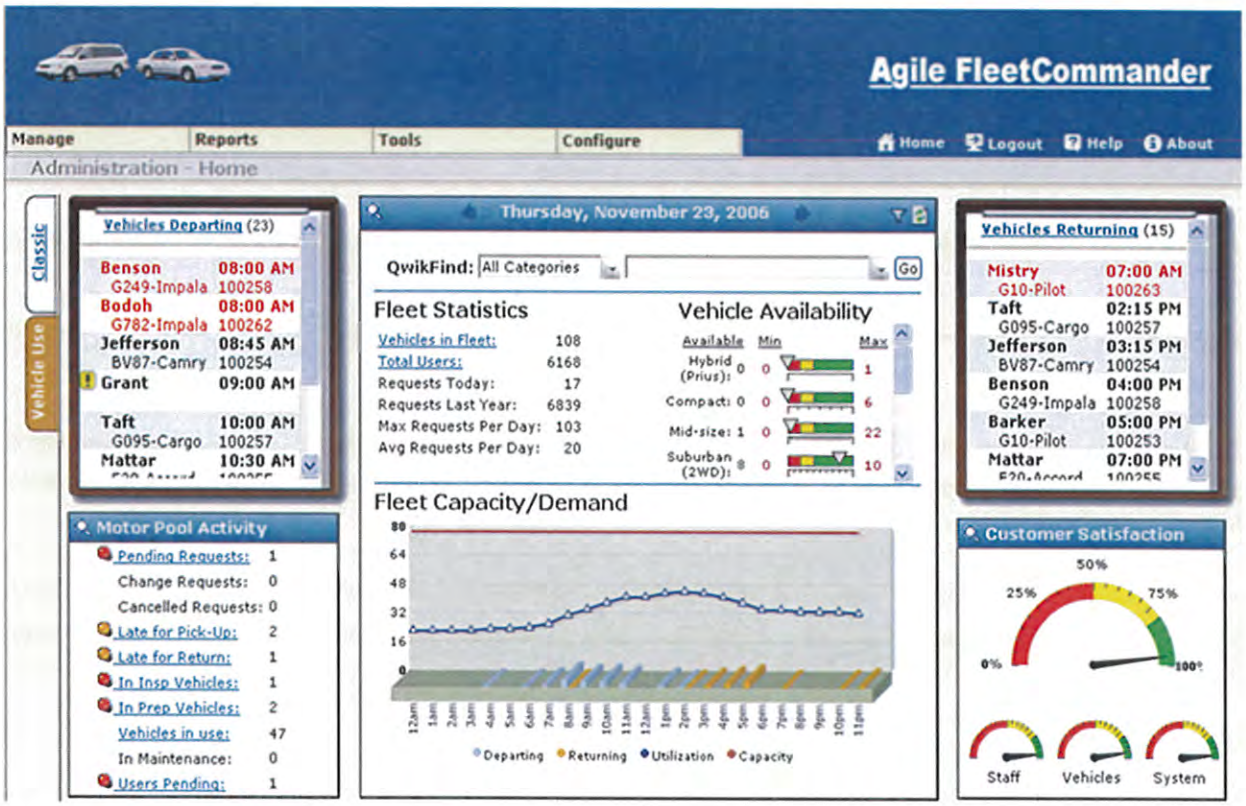

The Fleet Dashboard automatically updates to provide the latest status of the fleet

Other dashboards are available to show the status of accidents, maintenance, and more.

Wireless, automated odometer collection hardware

FleetCommander's Utilization and Diagnostic Chip (UDC) is a wireless solution that is used to collect odometer data and a wealth of other information from the vehicle such as: hard starts & stops, trip start & end, distance per trip, maximum speed, idle time, miles per gallon, diagnostic trouble codes (DTCs) and more.

The wireless device, unlike real-time GPS systems, does not require a monthly communications charge. Data is automatically transferred from the vehicle once the vehicle passes within range of a UDC access point.

Approximate size: 1" x 1.5" x 2"

UDCs plug in to the OBD port on passenger & light duty vehicles. Installation takes less than a minute.

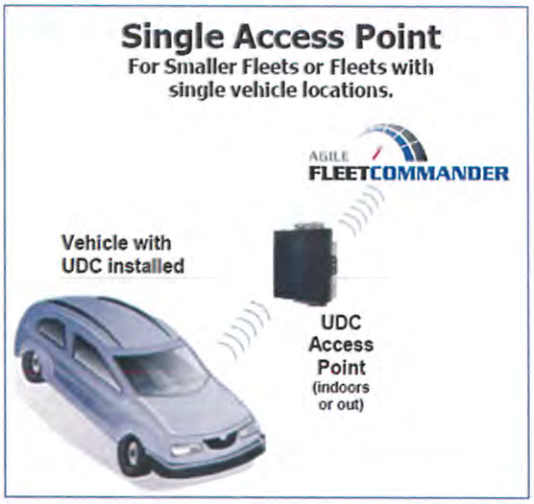

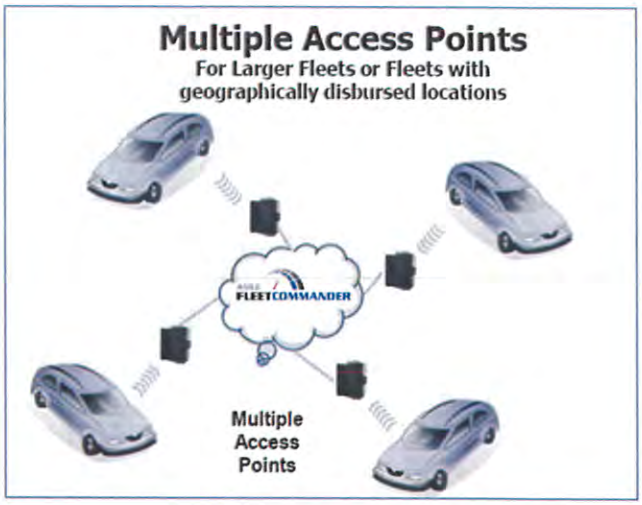

Larger fleets may want multiple access points to collect data throughout a campus or across a large geographic area.

In-vehicle car sharing hardware

Agile's in-vehicle dispatching hardware product, Agile FleetShare ™ is a technology advancement that offers fleet managers another option for managing vehicles. Here's how it works:

1) Vehicle requests are made and approved via FleetCommander's powerful on-line reservation capability.
2) Drivers simply scan their Agile FleetShare card to gain access to the vehicle and to mobilize the vehicle's engine. Keys are stored in the vehicle.
3) At the end of a trip, the vehicle is locked and immobilized to prevent unauthorized access. All trip data is collected and incorporated in to FleetCommander to facilitate automatic billing, utilization reports, and more.

Agile FleetShare ™ is yet another way to dispatch vehicles

48) Describe your "Green" program as it relates to your company, your products/equipment, and your recycling program, including a list of all green products accompanied by the certifying agency for each (if applicable).

Agile's management team maintains a focus on environmental stewardship, conservation of natural resources, reduction in mobile sources of emissions, and recycling. In 2011, for example, the company's telecommuting policy resulted in a reduction of more than 2,000 gallons of fuel and the associated reduction in emissions from more than 58,000 commuting miles. Employees located in Maryland car pool together to the corporate office in Virginia. Our company actively recycles paper, plastic, glass, metal, and hazardous materials. The president/CEO owns an all-electric vehicle to reduce his carbon footprint.

Our products help achieve green initiatives using technology such as:

- Our in-vehicle Utilization and Diagnostic Chip (UDC) tracks idle time, fast acceleration and deceleration, and other gas-consuming activities. This data is available in reports to help change driver behavior.
- Software components, such as the car pooling module, help reduce the number of trips needed by encouraging drivers to share a ride
- FleetCommander's reservation system has many different ways to communicate green policies and procedures. One fleet reported a 50% reduction in the number of out-of-town trip simply by communicating and enforcing policies regarding personal use of company vehicles.
- Agile's FleetCommander products and officials are featured in the major industry publication *GREEN FLEET*, July/August 2013 edition. The fleet industry looks to us as green subject matter experts.

Sharing Vehicles for a Leaner, Greener Fleet

"Vehicle sharing is a fleet management strategy to reduce costs and rightsize a fleet by facilitating the use of a single vehicle by more than one person," explained Ed Smith, president of Agile Access Control. Based in Chantilly, Va., Agile is the developer of FleetCommander, a Web-based technology for fleet and motor pool management.

"It's nothing more than having a ratio of vehicles-to-personnel of greater than one-to-one," Smith continued. "And, by increasing the ratio of cars to people without adversely impacting the ability to perform a job, you're generally reducing costs."

GREEN FLEET – Excerpt from Ed Smith, president of Agile Access Control, Inc.

49) Describe any Women or Minority Business Entity (WMBE) or Small Business Entity (SBE) accreditations and the general minority and small business program of your organization as it relates to a Contract resulting from this RFP.

None of these apply to our company and the method for selling products. However, our products and services are offered through a Small Disadvantaged Veteran Owned Small Business, Government Marketing & Procurement LLC, the holder of our GSA schedule.

50) Identify any other unique or custom value added attributes of your company or your products/equipment or related services.

FleetCommander is unique in that it is the most flexible and configurable fleet software available for the sharing of vehicles. Hundreds of features and configuration options help fleet managers automate their disparate fleets – whether at a single location, across a state, or across the country.

There are many unique, value-added attributes of our solution versus other vendors' offerings, including:

1. Free trials. We are able to provide fully-functional trial versions of software to ensure that the solution meets the needs of the fleet manager. In practice, more than 95% of all customers that trial the solution actually purchase the solution.
2. Our car sharing solution is the most user-friendly solution available:
    a. Training requirements are drastically reduced using FleetCommander since help text and intuitive buttons and on-screen graphics guide the user through the checkout and check-in process while the user is at the key box. One Fortune 500 customer of FleetCommander reported that 0.2% of their users required any training on FleetCommander due to its ease of use.
    b. Users are not required to remember a confirmation number in order to access vehicle keys. Rather, they can login using a familiar username and password. They aren't limited to just numerals, either. Security and ease-of-use are enhanced by the system's ability to accept letters and numbers. A user could login as "esmith17" and a password of "pwd9872". System administrators can set the desired password strength that is to be enforced. Solutions from many vendors require users to login using a number that changes each time a vehicle request is approved. Confirmation numbers for a reservation made weeks in advance may be easily forgotten. Our solution precludes the many potential calls resulting from forgotten confirmation numbers.
    c. Valuable fleet information can be communicated <u>to the user</u> on the large color display. For example, the display shows the vehicle make, model, license plate, mileage, fuel level, parking space (if used) and more. FleetCommander also displays a list of known damage to the vehicle and can provide helpful text such as "Remember: I-95 interchange construction this weekend near Springfield."
    d. Valuable information can be collected <u>from the user</u> immediately when keys are returned. FleetCommander can collect information such as odometer values, fuel level, and parking space numbers. Drivers can also enter information concerning damage, required

maintenance, or the cleanliness of the vehicle. A GSA customer's site-specific needs for data collection, such as Veterans Health Administration site requirements for collecting "trips" and "patients transported," can easily be met. Intuitive buttons and input prompts make it easy. This simply isn't available from solutions that rely on a numeric key pad as the user interface.

3. Our solution is flexible in that it can be hosted by the customer or by Agile.

51) Other than what you have already demonstrated or described, what separates your company, your products/equipment and related services from your competition? What makes your proposed solutions unique in your industry as it applies to NJPA members?

Discriminators of our company, products and services include:

1. We are U.S.-based. All of our product development, customer support, metal fabrication, hosting and other services are US-based.
2. We have the deepest and broadest capabilities with respect to car sharing and right-sizing of a fleet. No other company has the flexibility and configurability of our solution.
3. Our FleetCommander software solution has experienced 0 seconds of unscheduled downtime in more than four years. Our fault-tolerant hosting environment ensures that services are available to customers when needed.
4. Our commitment to our customers sets us apart. Here's what our customers are saying about us:

"I want to sincerely thank you for all your help. Best support around. FleetCommander has been a dream for us. And we get top quality service from Agile customer support."

-- Commonwealth of Kentucky

"I'd recommend purchasing the FleetCommander product because of its ease of use & excellent customer service. Volusia County does not consider you a vendor; you are a partner. Your product and customer service are awesome."

-- Volusia County, FL

"It has been going GREAT! I have never been involved in the implementation of a new computer system of any sort that has gone this smoothly. I have never had anything that wasn't responded to in a day. Particularly with questions we've had as the staff has started using the system, it's been great to have a response back to questions so promptly. I really feel that being able to get back to staff with solutions quickly helps with acceptance. I have no idea how you guys do it, but I sure appreciate it."

-- Humboldt County, CA Office of Education

52) Identify and describe any service contract options included in the proposal, or offered as a proposed option, for the products/equipment being offered.

Service contract options available with FleetCommander include:

Hosting: Agile offers turnkey hosting of the FleetCommander solution. Alternatively, the solution can be hosted by the customer.

Maintenance and Technical Support: Our software maintenance agreement ensures that all users gain the maximum benefit out of all enhancements added to the product. Product releases are distributed up to three (3) times per year. Our technical support services are provided to ensure that staff is available to answer questions and provide refresher training as needed.

Our solution is sold as a Software-as-a-Service (SaaS) model or as a perpetual license.

53) Identify your ability and willingness to offer an awarded contract to qualifying member agencies in Canada specifically and internationally in general.

We are able to offer qualifying member agencies in Canada a contract. We currently have several customers in Canada. Although there are exceptions, and our product is used internationally, our general policy is to restrict contracts to North America.

Risk of theft of our intellectual property rights is limited when we host our solution. Under a scenario in which we host the solution, we are more amenable to consider international customers outside of North America.

Note: Contracts to international sites will be considered on a case-by-case basis. Our concern for international sites is piracy of software. We are open to international contracts.

54) Describe any unique distribution and/or delivery methods or options offered in your proposal.

Agile's core product, FleetCommander, is provided as an Agile-hosted solution or a customer-hosted solution. Agile-hosted implementation of the solution can be setup in hours or days. Customer-hosted solutions are delivered via Agile's secure portal. The download, setup, and training processes are very straightforward.

Hardware is delivered in a manner desired by the customer. Our secure, automated key boxes are made to order to meet a customer's exact needs.

(Products, Pricing, Sector Specific, Services, Terms and Warranty are addressed on Form P)

Signature: _____ Date: 5/10/2013

3 Form B

Form B

PROPOSER INFORMATION

Company Name: Agile Access Control, Inc.

Address: 14101 Willard Rd, Suite A

City/State/Zip: Chantilly, VA 20151

Phone: (408) 213-9555 x501

Fax: (703) 832-8729

Toll Free Number: (866) 539-2668

E-mail: Sales@AgileFleet.com

Web site: www.AgileFleet.com

Voids sometimes exist between management (those who respond to RFPs) and sales staff (those who contact NJPA Members) that result in communication problems. Due to this fact, provide the names of your key sales people, phone numbers, and geographic territories for which they are responsible

COMPANY PERSONNEL CONTACTS

Contract Manager Michelle DeLuca

Email: Mdeluca@AgileFleet.com

Phone: (408) 213-9555 x516

Other Contract Management Personnel

Name: Ed Smith

Title: President

Email: esmith@AgileFleet.com

Phone: (408) 213-9555 x501

4 Form C

Form C

EXCEPTIONS TO PROPOSAL, TERMS, CONDITIONS AND SOLUTIONS REQUEST

Company Name: Agile Access Control, Inc.

Note: **Original must be signed** and inserted in the inside front cover pouch.

Any exceptions to the Terms, Conditions, Specifications, or Proposal Forms contained herein shall be noted in writing and included with the proposal submittal. Proposer acknowledges that the exceptions listed may or may not be accepted by NJPA and may or may not be included in the final contract. NJPA may clarify exceptions listed here and document the results of those clarifications in the appropriate section below.

Section/page	Term, Condition, or Specification	Exception	NJPA Accepts	NJPA Rejects
38	Audited financial statement	Not provided. We are privately held. We have provided a variety of other verifiable means for evaluating the health and size of our company, including: banking reference, customer references, customer testimonials, and sales totals.		

Proposer's Signature: _____ **Date:** 5/10/2013

NJPA's clarification on exception/s listed above:

5 Form D

FORM D

Formal Offering of Proposal
(To be completed Only by Proposer)

FLEET MANAGEMENT AND RELATED TECHNOLOGY SOLUTIONS.

In compliance with the Request for proposal (RFP) for "FLEET MANAGEMENT AND RELATED TECHNOLOGY SOLUTIONS", the undersigned warrants that I/we have examined this RFP and, being familiar with all of the instructions, terms and conditions, general specifications, expectations, technical specifications, service expectations and any special terms, do hereby propose, fully commit and agree to furnish the defined equipment/products and related services in full compliance with all terms, conditions of this RFP, any applicable amendments of this RFP, and all Proposer's Response documentation. Proposer further understands they accept the full responsibility as the sole source of responsibility of the proposed response herein and that the performance of any sub-contractors employed by the Proposer in fulfillment of this proposal is the sole responsibility of the Proposer.

Company Name: Agile Access Control, Inc Date: 5/10/2013

Company Address: 14101 Willard Rd; Suite A

City: Chantilly State: VA Zip: 20151

Contact Person: Ed Smith Title: President

Authorized Signature (ink only): Edwin E. Smith
(Name printed or typed)

Form E

Contract Acceptance and Award

(To be completed only by NJPA)

NJPA 051613 FLEET MANAGEMENT AND RELATED TECHNOLOGY SOLUTIONS

Agile Access Control, Inc.
Proposer's full legal name

Your proposal is hereby accepted and awarded. As an awarded Proposer, you are now bound to provide the defined product/equipment and services contained in your proposal offering according to all terms, conditions, and pricing set forth in this RFP, any amendments to this RFP, your Response, and any exceptions accepted or rejected by NJPA on Form C.

The effective date of the Contract will be July 16, 20 13 and continue for four years thereafter AND which is subject to annual renewal at the option of both parties. This contract has the consideration of an optional fifth year renewal option at the discretion NJPA.

National Joint Powers Alliance® (NJPA)

NJPA Authorized signature: _____ Chad Coauette
NJPA Executive Director (Name printed or typed)

Awarded this July 16 day of 20 13 **NJPA Contract Number # 051613** - AAC

NJPA Authorized signature: _____ Scott Vevona
NJPA Board Member (Name printed or typed)

Executed this July 16 day of 20 13 **NJPA Contract Number # 051613**-AAC

Proposer hereby accepts contract award including all accepted exceptions and NJPA clarifications identified on FORM C.

Vendor Name Agile Access Control, Inc

Vendor Authorized signature: _____ Edwin E. Smith
(Name printed or typed)

Title: President

Executed this 18th day of July 20 13 **NJPA Contract Number # 051613** - AAC

Revision 3-21-13

7 Form F

PROPOSER ASSURANCE OF COMPLIANCE

Proposal Affidavit Signature Page

PROPOSER'S AFFIDAVIT

The undersigned, representing the persons, firms and corporations joining in the submission of the foregoing proposal (such persons, firms and corporations hereinafter being referred to as the "Proposer"), being duly sworn on his/her oath, states to the best of his/her belief and knowledge:

1. The undersigned certifies the Proposer is submitting their proposal under their true and correct name, the Proposer has been properly originated and legally exists in good standing in its state of residence, that the Proposer possesses, or will possess prior to the delivery of any product/equipment and related services, all applicable licenses necessary for such delivery to NJPA members agencies nationally, and that they are authorized to act on behalf of, and encumber the "Proposer" in this Contract, and

2. To the best of my knowledge, no Proposer or Potential Proposer, nor any person duly representing the same, has directly or indirectly entered into any agreement or arrangement with any other Proposers, Potential Proposers, any official or employee of the NJPA, or any person, firm or corporation under contract with the NJPA in an effort to influence either the offering or non-offering of certain prices, terms, and conditions relating to this RFP which tends to, or does, lessen or destroy free competition in the letting of the Contract sought for by this RFP, and

3. The Proposer or any person on his/her behalf, has not agreed, connived or colluded to produce a deceptive show of competition in the manner of the proposal or award of the referenced contract, and

4. Neither I, the Proposer, nor, any officer, director, partner, member or associate of the Proposer, nor any of its employees directly involved in obtaining contracts with the NJPA or any subdivision of the NJPA, has been convicted of false pretenses, attempted false pretenses or conspiracy to commit false pretenses, bribery, attempted bribery or conspiracy to bribe under the laws of any state or federal government for acts or omissions after January 1, 1985, and

5. The Proposer has examined and understands the terms, conditions, scope, contract opportunity, specifications request and other documents of this solicitation and that any and all exceptions have been noted in writing and have been included with the proposal submittal, and

6. If awarded a contract, the Proposer will provide the equipment/products and services and/or services to qualifying members of the NJPA in accordance with the terms, conditions, scope of this RFP, Proposer offered specifications and other documents of this solicitation, and

7. The undersigned, being familiar with and understand the expectations requested and outlined in this RFP under consideration, hereby proposes to deliver through valid requests, Purchase Orders or other acceptable forms ordering and procurement by NJPA Members. Unless otherwise indicated, requested and agreed to on a valid purchase order per this RFP, only new, unused and first quality equipment/products and related services are to be transacted with NJPA Members relating to an awarded contract, and

8. The Proposer has carefully checked the accuracy of all proposed products/equipment and related services and listed total price per unit of purchase in this proposal to include shipping and delivery considerations. In addition, the Proposer accepts all general terms and conditions of this RFP, including all responsibilities of commitment as outlined and proposed, and

9. In submitting this proposal, it is understood that the right is reserved by the NJPA to reject any or all proposals and it is agreed by all parties that this proposal may not be withdrawn during a period of 90 days from the date

proposals were opened regarding this RFP, and

10. The Proposer certifies that in performing this Contract they will comply with all applicable provisions of the federal, state, and local laws, regulations, rules, and orders, and

Company Name: Agile Access Control, Inc

Contact Person for Questions: Ed Smith

(Must be individual who is responsible for filling out this Proposer's Response form)

Address: 14101 Willard Rd; Suite A

City/State/Zip: Chantilly, VA 20151

Telephone Number: (408) 213-9555 x501 Fax Number: (703) 832-8729

E-mail Address: esmith@Agile Fleet.com

Authorized Signature: [signature]

Authorized Name (typed): Edwin E. Smith

Title: President

Date: 5/10/2013

Notarized

SEAN ALEXANDER BIEHL COMMONWEALTH OF VIRGINIA #358695 COMMISSION EXPIRES 10/31/2014 NOTARY PUBLIC

SEAN ALEXANDER BIEHL COMMONWEALTH OF VIRGINIA #358695 COMMISSION EXPIRES 10/31/2014 NOTARY PUBLIC

Subscribed and sworn to before me this 10 the day of May, 20 13

Notary Public in and for the County of Fairfax State of VA

My commission expires: 10-31-14

Signature: [signature]

8 Form P

Form P

PROPOSER QUESTIONNAIRE
Products/Equipment, Pricing, Sector Specific, Services, Terms and Warranty

Proposer Name: Agile Access Control, Inc.

Questionnaire completed by: Edwin E. Smith, President

Payment Terms and Financing Options

1) Identify your payment terms if applicable. (Net 30, etc.)

Net 30.

2) Identify any applicable leasing or other financing options as defined herein.

Our standard method for selling the product is either as a sale or as a lease (i.e., Software-as-a-Service). This applies to software. Hardware is generally paid for up-front.

Costs of product purchase may be amortized over time. This is handled on a case-by-case basis.

3) Briefly describe your proposed order process for this proposal and contract award. (Note: order process may be modified or refined during an NJPA member's final Contract phase process).

The following general ordering process is used to purchase Agile products and services:

1. Contact is made with Agile.
2. Agile sales representatives consult with prospective customer and work through the best fit with respect to products and services that meet the customers' needs.
3. As needed, on-line demonstrations and a 30-day free trial may be used to assist the customer in analyzing the suitability of our products and services. A trial agreement is put in place for each 30-day free trial.
4. As needed, references from similar environments will be provided to the customer for evaluation.
5. A draft contract may be shared with the prospective customer.
6. Once the product and service list is finalized, Agile provides a formal quote. Note, an informal quote may be provided to support the customers planning efforts.
7. A contract may be signed by both parties.
8. The customer issues a purchase order
9. Agile delivers products and services.
10. The customer is invoiced.

4) Do you accept the P-card procurement and payment process?

We accept Visa and MasterCard. We do not accept any other type of purchasing card.

5) Describe your ability to serve NJPA and NJPA Members through an E-Marketplace solution?

Our products and services are highly configurable and we offer nearly 150 different products and/or services. The sale is generally highly consultative in nature. Therefore, we typically take orders "the old fashioned way".

Technically, we have the capabilities to receive orders should the need arise.

Warranty

6) Describe, in detail, your Manufacture Warranty Program including conditions and requirements to qualify, claims procedure, and overall structure.

The following software warranty is part of our standard contact:

6 Limited Warranty

6.1. Licensed Software. Vendor warrants that the Licensed Software shall perform substantially in accordance with the requirements of this Agreement and, solely to the extent not inconsistent with the documentation for the term of Agreement. Vendor shall not be responsible for any errors or nonconformities in the Licensed Software resulting from Customer's failure to use the Licensed Software in conformance with this Agreement or modification of the Licensed Software by Customer.

6.2. Services. Vendor warrants that all services provided by Vendor to Customer under this Agreement shall be performed in a workmanlike manner.

6.3. Viruses and Disabling Mechanisms. Vendor shall use commercially reasonable measures to screen the Licensed Software to avoid introducing any virus or other destructive programming that are designed (i) to permit unauthorized access or use by third parties to the software installed on Customer's systems, or (ii) to disable or damage Customer's systems. Vendor shall not insert into the Licensed Software any code or other device that would have the effect of disabling or otherwise shutting down all or any portion of the Licensed Software, except as such capabilities are included in the off-the-shelf Licensed Software in the form of a payment key or product key. In the event a payment key is included in the Licensed Software in a Customer-hosted environment, the payment key shall be set to expire no less than one hundred years from the date of this agreement. Vendor shall not invoke any new code or other device at any time or modify the payment key, including upon expiration or termination of this Agreement for any reason. Customer shall not modify or disable the payment key or product key at any time.

6.4. Infringement. To the best of Vendor's knowledge, Customer's permitted use of the Licensed Software will not infringe the intellectual property rights of any third party.

6.5. No Litigation. Vendor further warrants there is no pending or threatened litigation that would have a material adverse impact on its performance under this Agreement.

6.6. Authority. Vendor has the full power, capacity and authority to enter into and perform this Agreement and to make the grant of rights contained herein.

6.7. Compliance with Applicable Law. Vendor warrants that the services provided under this Agreement and Customer's permitted use of the Licensed Software shall comply with applicable federal, state, and local laws and regulations.

The above warranty applies to all customers that are current on all payments.

7) Do all warranties cover all products/equipment parts and labor?

Hardware parts are not involved with our software warranty. All labor is included.

Our standard warranty offering for hardware is to send replacement hardware to replace a failed component. Other options are available. Unique situations such as hardware that is "dead on arrival", should they occur, will be handled on a case-by-case basis in a way that is least impactful on the customer. As needed, on-site will be provided at no cost to remedy the situation.

8) Do warranties impose usage limit restrictions?

No.

9) Do warranties cover the expense of technicians travel time and mileage to perform warranty repairs?

No. This is typically not required. Any hardware that is included as part of our solution is typically repaired by sending the failed component via overnight mail. Replacement is done by the customer. Should the customer desire a technician to arrive on-site, Agile's cost would be passed along to the customer.

NOTE: This is a very rare occurrence. Our components are easily maintained by a customer with the knowledge of how to use a screwdriver. Should the customer not want this responsibility, we can provide on-site service.

10) Please list any other limitations or circumstances that would not be covered under your warranty.

Vandalism is not covered under warranty.

11) Please list any geographic regions of the United States for which you cannot provide a certified technician to perform warranty repairs. How will NJPA Members in these regions be provided service for warranty repair?

There are no geographic regions of the U.S. that cannot be serviced by a technician. Nearly 100% of warranty work involves a simple swap-out of a single component. This is generally performed by the customer. In the event that a unit is dead-on-arrival at the customer's site, a certified technician will be dispatched to the location or the unit will be returned to Agile.

Equipment/Products and Related Services and Pricing

12) Provide a general narrative description of the equipment/products and related services you are offering in your proposal.

Product Overview

FleetCommander is a fleet management system that is 100% web-based. That means users access all features from a web browser. There is no setup required on the user's desktop computer.

The term "fleet management system" means many things to many people. Our fleet management solution originated from right-sizing and optimization tools aimed at making it very easy to manage vehicles in a motor pool. The core product has always had powerful features to manage vehicles, drivers, and vehicle requests. The tool has evolved to include many additional features aimed at making a fleet manager's life easier across all aspects of fleet management, including, but not limited to maintenance, risk management, fuel management, odometer collection, carpooling, and more.

YOUR OWN FLEET WEB SITE - What is FleetCommander? FleetCommander is your very own web site that is used by you, fleet managers, dispatchers, maintenance personnel, inspection & prep staff, and even your drivers. We never license FleetCommander based on the number of users that access the system. In fact, we know that the more people that "touch" the system, the more efficient the fleet becomes. Site security ensures that each different type of user is only allowed to access the appropriate parts of the system. Your web site looks like you want it. Link FleetCommander to an existing enterprise web site or have it stand-alone. You can customize logos, links, and text to make it uniquely yours.

ON-LINE VEHICLE REQUESTS - One of the most effective ways to optimize the use of vehicles is to allow drivers to use vehicles from a motor pool. To make this easy and efficient, FleetCommander includes a customizable, on-line vehicle request form that is completed by your drivers. The form does automatic error-checking, performs automated policy enforcement, and provides a wealth of information to the driver.

Your users are encouraged to interact with the FleetCommander system directly. Doing so relieves the fleet staff of the burden of having to enter reservation data. For a user, the average request for a vehicle takes less than 30 seconds. The request is entered right into FleetCommander. The fleet administrator does not need to re-type the reservation request. Drivers receive an automated email and can even check their request status on-line at any time. Compare this to the time and effort it takes to respond to faxes, emails, and phone calls.

KEY CONTROL – The optional, automated key control capability enables your fleet drivers to pick-up and drop-off keys night or day, 24 x 7. Each transaction is secure and captured by FleetCommander. Authorized personnel can make requests for vehicles right at the key control kiosk. We also offer a keys-in-the-vehicle dispatch option, similar to commercial car-sharing services. This unique product, called Agile FleetShare ™, is fully integrated into FleetCommander with respect to reservations, billing, data collection and reporting.

UTILIZATION AND DIAGNOSTIC CHIP (UDC) - The FleetCommander UDC is a low-cost, powerful, wireless, plug-and-play device that enables you to accurately and automatically collect the data you need to understand individual vehicle trip detail and the overall utilization of your fleet. No need to rely on drivers to record accurate mileage: the FleetCommander UDC does it automatically, without requiring expensive monthly cellular charges or subscription fees. With the FleetCommander UDC invisibly installed in passenger vehicles and light duty trucks, data is wirelessly collected and forwarded

to FleetCommander. The data includes the trip date-stamp, duration in time and distance, max speed, idling, fuel usage, diagnostic trouble codes (DTCs), MPG, and max acceleration/deceleration. Vehicle profiles are automatically updated with odometer information that triggers preventive maintenance (PM) reminders. When used in conjunction with the Motor Pool module, the returning odometer can be provided by the UDC instead of the driver.

FLEET UTILIZATION, OPTIMIZATION & ASSIGNING VEHICLES - There is a right vehicle and a wrong vehicle to give to a driver. A seasoned dispatcher may know which vehicle is best based on years of experience. Is that dispatcher always available? Fortunately, tools like FleetCommander provide intuitive graphical interfaces to make it quick and easy for even the novice to maximize the efficiency of a fleet. Want to hand out high-mileage vehicles for short trips? Want to rotate through your vehicles in a round-robin fashion? Is there an opportunity to make several trips with the same vehicle in the same day? FleetCommander handles all this for you. And, FleetCommander can even "auto-assign" and "auto-approve" vehicle requests for authorized users.

VEHICLE MANAGEMENT - Need to see which vehicles are over-utilized? How about under-utilized? Want to compare utilization between different sites in your enterprise? Want to compare utilization by type of vehicle? Has management ever asked how vehicles are being used? Do you need a report that shows the utilization rates of each vehicle? A wealth of tools is available to enable you to manage and analyze your fleet.

USER/DRIVER MANAGEMENT - One of the more powerful features of FleetCommander is user/driver management. Do you need to look through paper records to see if someone is eligible to drive? Has he or she received the proper training for that vehicle? Has someone's driver's license expired since he last used a vehicle? FleetCommander automatically checks to make sure driver's license information is current. Are you sure that your drivers have seen the latest fleet policy changes? FleetCommander can require that they read about any policy changes each time a new policy goes into effect. FleetCommander can even prompt your users to update their on-line profiles. How is this done in your organization today?

FLEET DASHBOARDS - Which activities consume you and your staff? What information do you wish you could see without even touching your keyboard? Take a look at FleetCommander's Dashboards. Dashboards are the ultimate fleet management screens. At a glance, they tell you about what is going on with your fleet, and they update every five minutes.

The **Vehicle Use Dashboard** shows key information about how many vehicles are leaving and returning, how many vehicles are late being picked up or returned, how many outstanding requests for vehicles are pending, and how many new user registrations have yet to be acted upon by your administrator. You'll quickly know the availability for each type of vehicle in your fleet. The Fleet Capacity/Demand graph will show the utilization on an hour-by-hour basis. It will also let you know the busiest times when vehicles are leaving and returning so your staff can plan appropriately. The Clipboards let you electronically cross off each vehicle as it leaves and returns. And with is the Dashboard automatically updating every 5 minutes, fleet data is always current. Need to know more about an aspect of your fleet? The QwikFind feature quickly takes you to a vehicle profile, a user profile, a reservation, or a work order.

The **Maintenance Dashboard** conveniently provides an accurate summary of maintenance tasks and work orders. The **Risk Management Dashboard** is a critical launching point for viewing and acting upon incident/accident reports.

MILEAGE COLLECTION AND IMPUTED INCOME - FleetCommander's imputed income functions make it easy for you to collect odometer readings of assigned vehicles no matter where in the world the vehicles are located. The customizable forms can attribute miles driven to personal use, commuting, business

use, or other uses as you desire. FleetCommander will let you know who hasn't reported their mileage in the timeframe you define. It will then send your users a custom email that takes them to their own page in FleetCommander to report mileage and other information. We can even develop custom reports to import this data into your accounting system.

MAINTENANCE - FleetCommander's maintenance capabilities allow you to create maintenance plans and assign them to vehicles. FleetCommander will notify your maintenance staff when certain tasks are due or near-due as they trip time and mileage thresholds. You'll quickly create work orders and track the status and costs of the tasks. FleetCommander is great for those shops that outsource to a variety of vendors.

PARTS MANAGEMENT - The Parts Management module will allow administrators to track and control all inventory, including inventory levels and minimum and maximum points. Inventory can be tracked across multiple vehicle sites, stockrooms and vendors.

FUEL MANAGEMENT – Consolidate your fuel data with the remainder of your fleet data by importing your fuel records into FleetCommander. FleetCommander will map all fuel transactions to the specific vehicles, update vehicle odometers, and will provide user interfaces that are valuable for looking for fuel transaction exceptions.

RISK MANAGEMENT - The Risk Management module provides complete online incident reporting and subsequent claims processing. It allows users to upload photos, images, and reports.

GPS ODOMETER UPDATES - FleetCommander vehicle profiles can be updated with real-time updates from GPS systems located in vehicles. Odometer information will be captured from the GPS vendor databases and used to update the odometers of the vehicles in FleetCommander without intervention required from an administrator. The benefit is that FleetCommander will automatically have updated odometer information that is helpful in triggering PM reminders and aging reports.

FEEDBACK SURVEY - When all is said and done, your users will be happier and your fleet will be more efficient using FleetCommander. How do we know? We have hard data to show you. In fact, FleetCommander has an on-line Customer Feedback form that can be completed 24 hours a day to get valuable input from your users. There is even a tool within FleetCommander that sends the Customer Feedback form via email to recent fleet drivers. FleetCommander will increase customer satisfaction through the use of tools like email confirmation of vehicle requests, trip receipts, 24x7 on-line access to forms, reports, and vehicle reservations, and much more. Who wouldn't want survey results to show to their manager?

STANDARD MANAGEMENT REPORTS – FleetCommander has dozens of reports including utilization reports, billing reports, maintenance reports, asset reports, user reports, and more. Report interfaces allow you to quickly select the data you are looking for, specify criteria such as sort orders for data output, and even specify the format of your report (e.g. on-screen, Excel, or other formats).

INTEGRATION WITH OTHER SYSTEMS – Having all of your fleet data in one repository is invaluable when you are reporting. FleetCommander is very flexible and capable of being integrated with external systems. FleetCommander has successfully been integrated with many types of systems, including accounting systems, human resource systems, fleet maintenance systems, risk management systems, automobile manufacturing systems, fuel systems, and more.

User Interface Features & Conventions

FleetCommander is accessible via the Internet or your Intranet. Most sites that are hosted and administered by Agile have a URL in a format such as <yourURL>.agilefleet.com. If you elect to host FleetCommander

or if you desire to have a different URL, this can be accomplished by registering a new domain name. In either case, to gain access, type the URL (web address) in the "Address" line of your Internet Explorer browser as shown in the picture below.

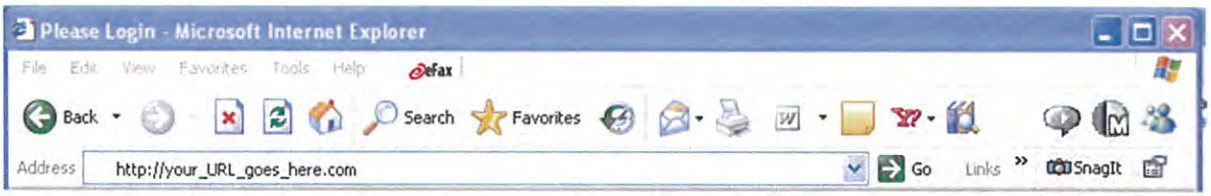

Your test, training, and production sites will all have a unique URL

FleetCommander Home Page

After successfully navigating to your FleetCommander web site, you will see the user home page. From this page, you can access:

Vehicle Use Features – These links let you make a reservation, check reservation status on-line, edit your user profile, run selected reports, use the car pool function, look at vehicles assigned to you, enter odometer values for vehicles you are responsible for, and more. These pages require that you log in. In the example below, these functions are found in the "***Vehicle Use***" section of the home page.

Information Pages – These pages provide customized content prepared by your administrator. They do not typically require that you log in; however, they can be configured to require a login. Important site information is often put in this section of the home page. There are functions available to system administrators to allow these web page functions to be customized to include content that is unique to your organization. Additionally, administrators can elect to show or not show these links. For example, administrators can elect to eliminate the "Sign Up Now!" feature if the on-line registration function is not desired.

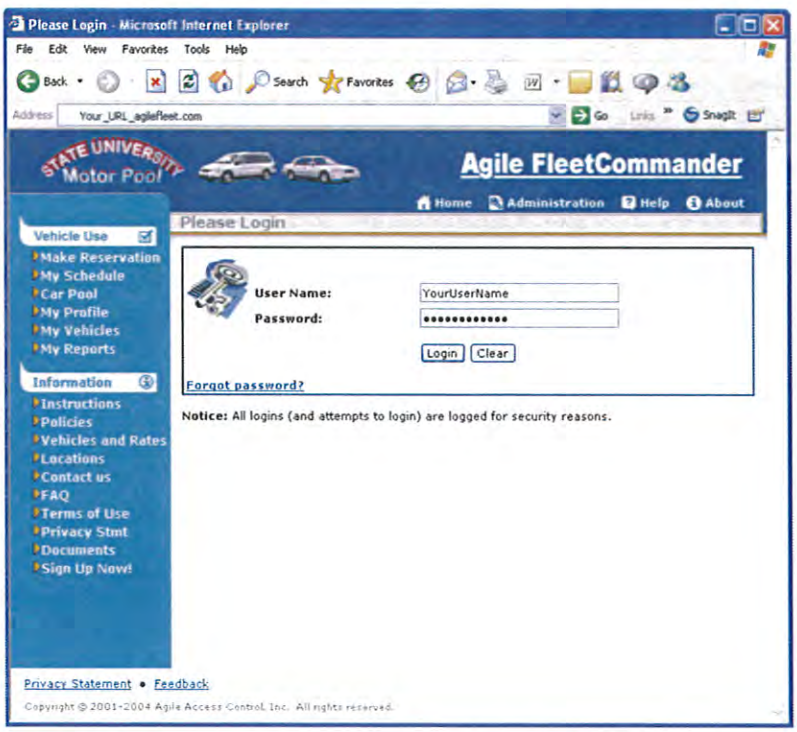

Users gain access through Internet Explorer or other web browser

Administrative Features – These are only available to users with system administration privileges. All administrative functions are accessed by clicking on the link titled "Administration" found in the top right of the web page.

Other features that can be customized on the home page include the logo found in the top-left portion of the page as well as the home page content that replaces the User Name and Password prompt after logging in.

Note: Your site can be easily customized by the system administrator. Examples shown throughout this document may look different than your actual site.

Menus accessed typically by users of FleetCommander on the home page are located on the left side of the page.

Menus on the administrative side of the application are different than the menus on the user side of the application. To access a menu item on the administrative interface, click on the primary menu item (Manage, Reports, Tools, Configure). Sub-menu items are invoked by simply moving the cursor over the desired function.

Administrative menus are intuitive

Authentication

To login to FleetCommander, complete the User Name and Password prompts and then click on the "Login" button.

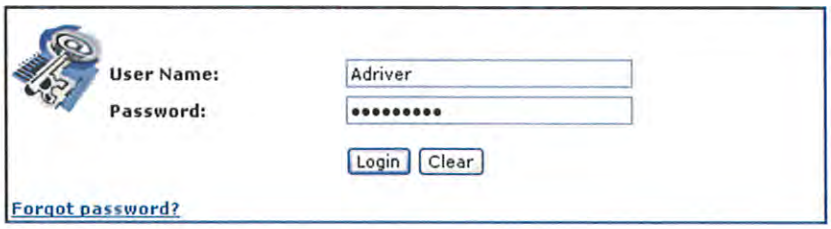

Some FleetCommander customers have synchronized their human resources, risk management, or Active Directory databases to help administer login accounts.

Driver / Requestor Interfaces

The FleetCommander functions that are accessible to persons requesting vehicles and persons driving your fleet vehicles are easy to use. By providing these users access to the system, you are increasing the level of customer service and you are increasing the quantity and quality of the metrics that are so critical to analyzing your fleet.

Functions that non-fleet staff can perform via the browser-based interface of FleetCommander include, but are not limited to:

- Make on-line vehicle requests
- Receive email confirmations of requests and request approvals
- Check status of all future and past requests
- Perform limited reporting (limited to their own data)
- Enter odometer readings for vehicles under their purview
- Compete the on-line customer satisfaction survey
- Enter accident/incident reports

The vehicle request form is simple. Default values for information such as start dates and end dates help make the form easy to use. Automatically populating the form's department and account fields with the information from the driver's profile helps out even more. It's simple and accurate. 99.8% of new users require no user training or technical assistance to make their first request.

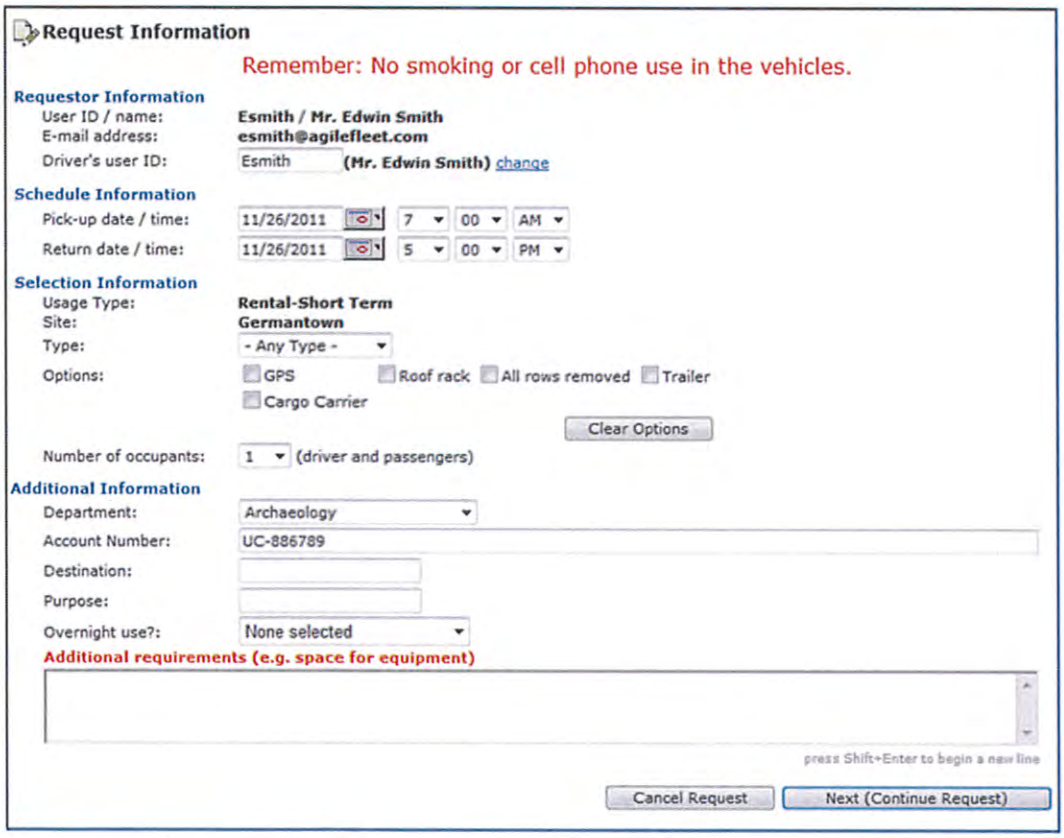

Request Information

Remember: No smoking or cell phone use in the vehicles.

Requestor Information
User ID / name: Esmith / Mr. Edwin Smith
E-mail address: esmith@agilefleet.com
Driver's user ID: Esmith (Mr. Edwin Smith) change

Schedule Information
Pick-up date / time: 11/26/2011 7 00 AM
Return date / time: 11/26/2011 5 00 PM

Selection Information
Usage Type: Rental-Short Term
Site: Germantown
Type: - Any Type -
Options: GPS Roof rack All rows removed Trailer Cargo Carrier
Clear Options
Number of occupants: 1 (driver and passengers)

Additional Information
Department: Archaeology
Account Number: UC-886789
Destination:
Purpose:
Overnight use?: None selected
Additional requirements (e.g. space for equipment)
press Shift+Enter to begin a new line

Cancel Request | Next (Continue Request)

It takes approximately 30 seconds to submit an accurate, validated vehicle request form.

Emails can be configured by your FleetCommander administrator to send confirmation emails to your drivers. Emails can even be automatically sent to a driver's supervisor and/or even the fiscal officer for the account specified on the form.

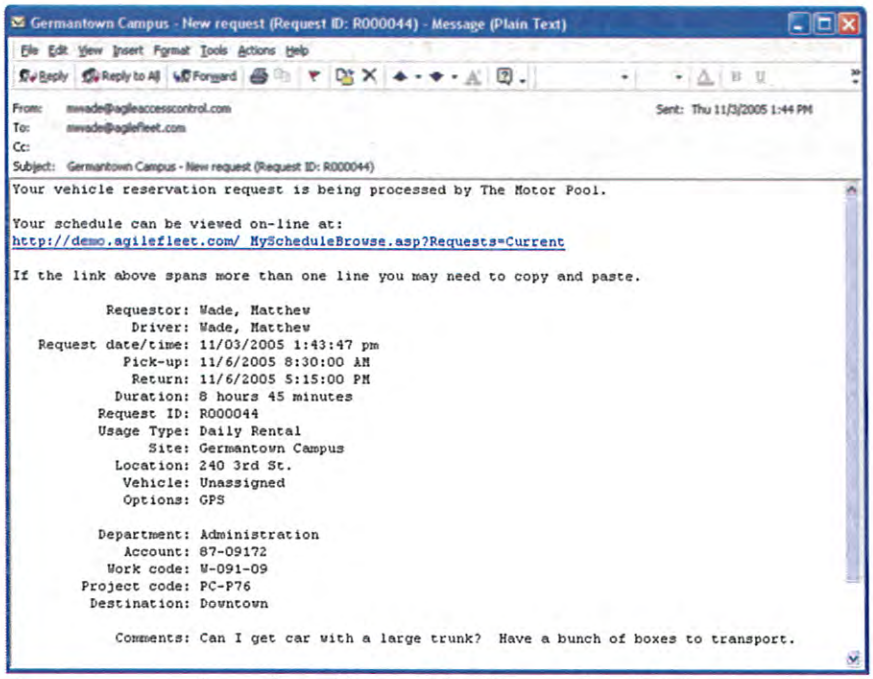

Email confirmation messages can be configured by your FleetCommander administrator to be sent to the driver, the driver's supervisor, and even the account fiscal officer.

Fleet drivers can also unburden the fleet staff by checking their own vehicle request status on line using the "My Schedule" link – any time night or day. It's easy.

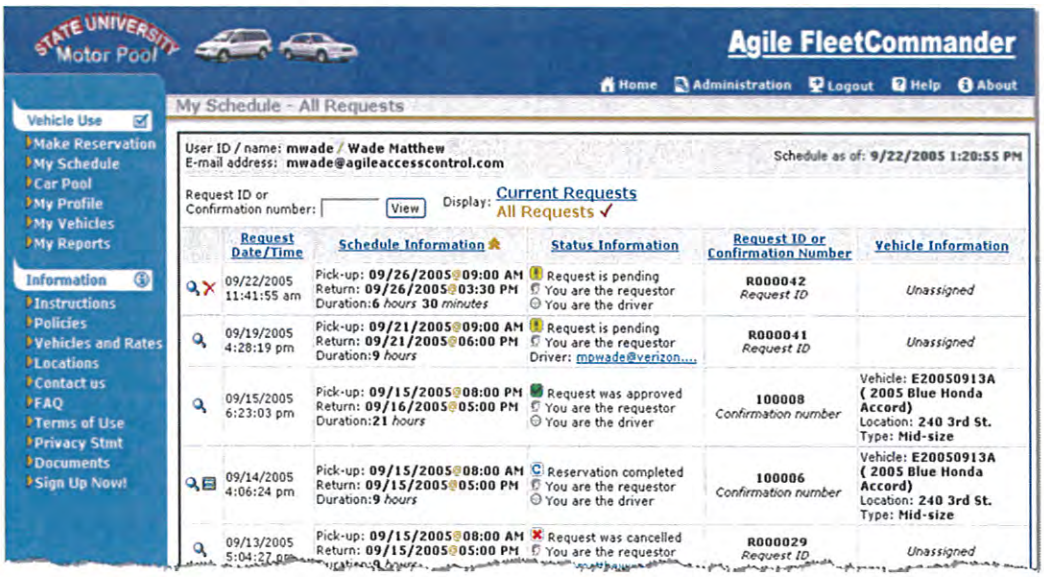

The status of current or past vehicle requests can be checked on-line any time.
Trip receipts are available for completed trips.

Fleet drivers that have permanently assigned vehicles can proactively record their odometer readings on-line using the Trip Log/Mileage Collection tool. Alternatively, fleet administrators can prompt "drivers of record" to record odometer readings on-line if they have not reported mileage within established time frames. A large benefit of current odometer readings is the accurate scheduling of preventive maintenance tasks based upon mileage thresholds.

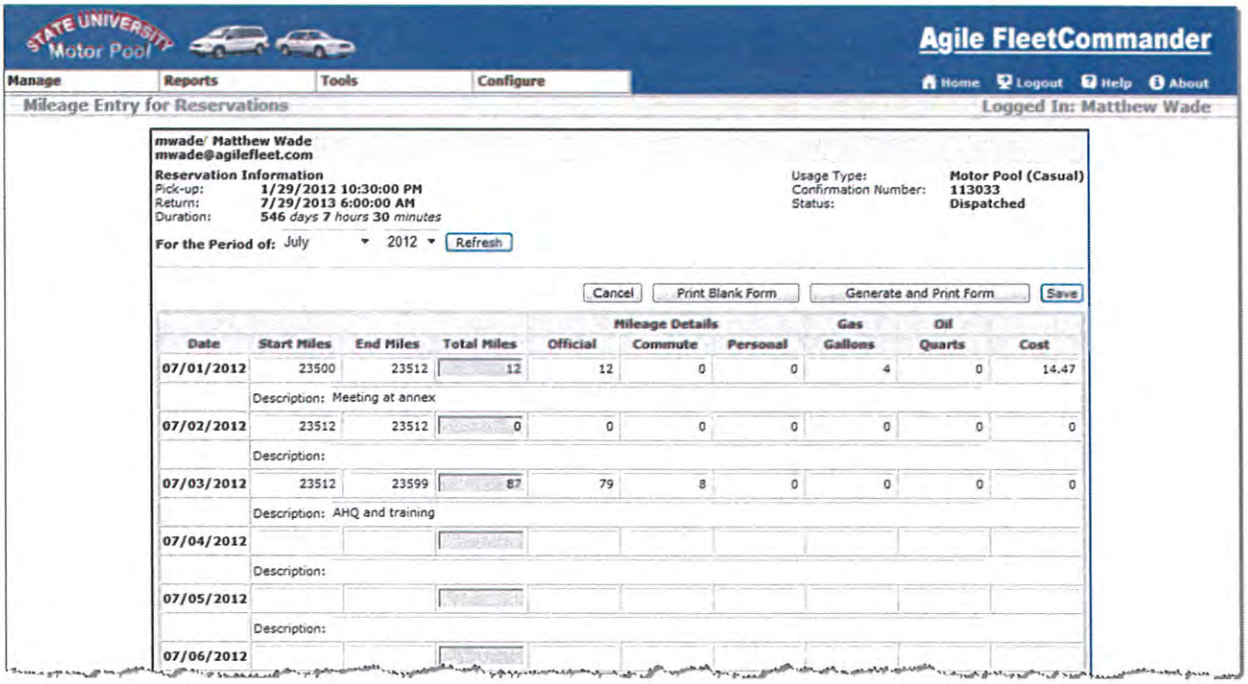

The mileage collection form, which can be configured in a variety of ways, is useful for capturing odometer information as well as imputed income and other valuable fleet data.

All of the features of FleetCommander provided to fleet drivers increase customer satisfaction. FleetCommander has the tools to show this. Fleet drivers can complete the on-line feedback form provided in FleetCommander at any time they desire. Or, drivers that have accessed FleetCommander within the designated reporting period can be prompted via an automated email to complete the on-line customer satisfaction form. The result? FleetCommander displays customer satisfaction ratings to fleet managers, which is automatically updated every five minutes. Trends in customer satisfaction can be tracked via the Feedback Report as well.

The graph at the right is real data taken from a FleetCommander site in a university setting. This graph automatically updates every five minutes on the fleet manager's desktop... reflecting the last thirty days' worth of customer satisfaction surveys submitted on-line.

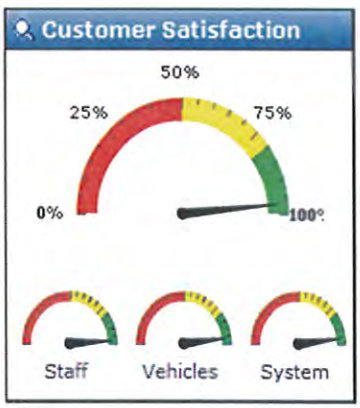

Administrative Interfaces

FleetCommander's administrative features provide everything you need to manage the fleet. The table below reflects just some of the functions available to fleet staff.

Assign Vehicles – optimizes assignment of the "right" vehicle to each vehicle request

Billing & Chargebacks – calculates charges and shares information with external systems

Manage Reservations – sorts, organizes, and manages all reservations

Dispatch Out & In – captures accurate check-out and check-in of vehicles

Manage Inspection & Prep – coordinates the inspection, cleaning, re-fueling, and other activities performed on fleet vehicles

Manage Vehicles – maintains information about vehicles, including standard vehicle data, usage data, access rules, and more

Manage Users – maintains a wealth of information about users and how they can interact with FleetCommander

Maintenance – coordinates all preventive maintenance, repairs and other maintenance

Reports – dozens of standard management reports

Fleet Dashboard – the most powerful tool in fleet. The system automatically updates every five minutes to display the status of your fleet

Manage Fleet – graphically depicts how your fleet is being used & vehicle availability

Mileage Collection – automates the collection of mileage data from your fleet users

GPS Updates – automatically collect odometers from your GPS provider to update the vehicle profiles without user intervention

Email Tools – manages the communication with a segment of your fleet staff via email

Manage Tags – coordinates renewal of tags/registration

Customer Feedback Tools – gathers and displays metrics depicting how well you are managing your fleet

Accident/Risk Management – tracks closure of accident claims

Fuel Management – imports and manages fuel transactions

FleetCommander's Vehicle Use Dashboard is perhaps the single most powerful interface in all fleet software. The screen automatically updates every five minutes to tell fleet administrators what is going on in their fleet. The screen can easily be "filtered" to only look at the segment of the fleet that the administrator is interested in seeing.

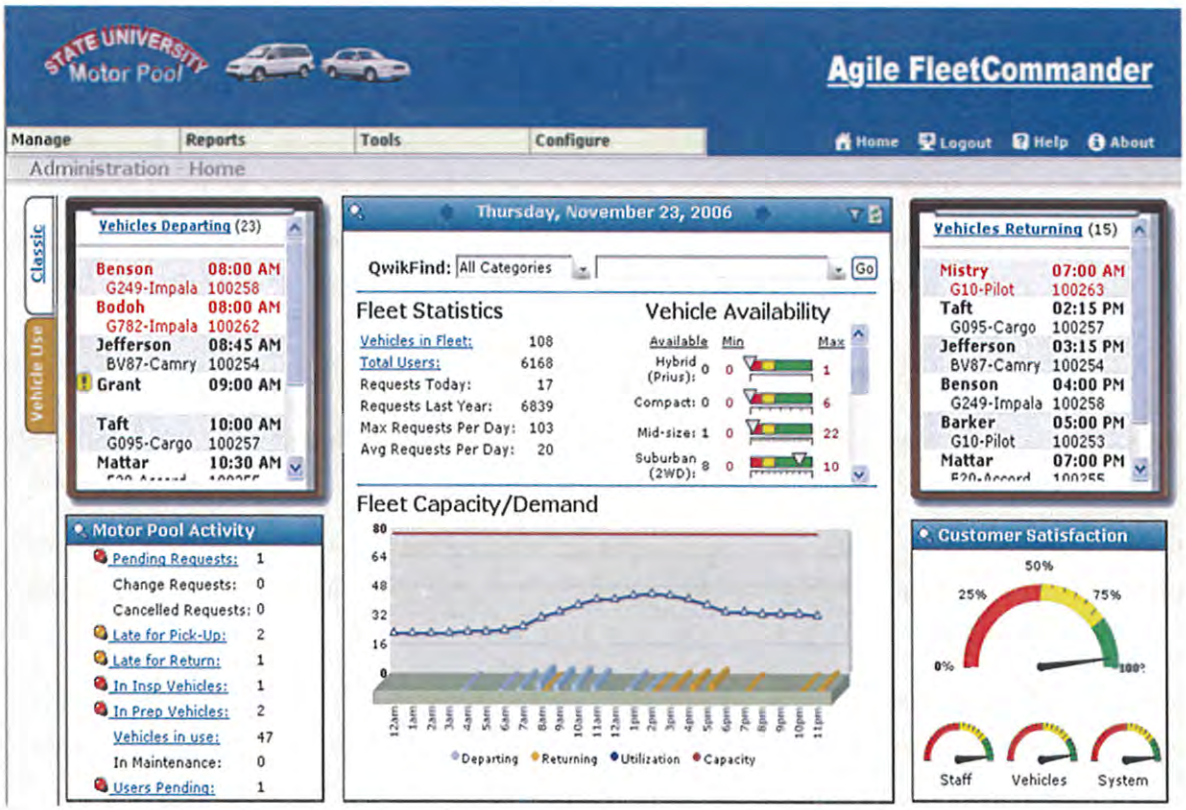

The staff has all of the fleet information at their fingertips

Here's what this single, automatically-updating screen is telling the fleet staff:

- The top-left "clipboard" tells us that there are 23 vehicles departing today… And, the first two (shown in red), are late being picked up. A 9:00am reservation (shown with a yellow icon next to it) has not been approved yet and needs to have a vehicle assigned to it. To dispatch a vehicle and time-stamp its departure, the administrator just clicks on the reservation in the clipboard. Or, watch it disappear after the keys are picked up from the key control device. If you need additional info, just click on the item.
- The top-right clipboard tells us that there are fifteen vehicles returning today. The first one (shown in red) is late returning. As vehicles & keys return, the dispatcher simply clicks on the reservation in this clipboard to time-stamp the return and enters critical trip information such as ending odometer, parking space, and fuel level. Vehicles returned via the key control device fall off of the clipboard automatically.
- The Fleet Statistics portion of the Dashboard highlights good-to-know fleet metrics.
- The Vehicle Availability section of the Dashboard shows how many of each type of vehicle are available for use as of the last five-minute update. If someone shows up at the dispatch counter and asks, "Do you have a mid-sized vehicle for me?" the administrator will have the answer immediately.
- The Motor Pool Activity section of the Dashboard shows that there is one pending request that needs to be approved. There are two vehicles late for pickup and one vehicle late for return. One vehicle is in the

Inspection queue and two vehicles are in the Prep queue. Forty-seven vehicles are in use today and there is one request pending for a user to be granted access to the system. Each of the items in this section of the screen can be acted upon simply by clicking on the link. It's easy.

- The Capacity/Demand graph shows an hour-by-hour accounting of what's happening in the fleet today. Looks like a relatively quiet day.
- Finally, the Customer Satisfaction graph shows that fleet customers remain very happy with the fleet staff, vehicles, and FleetCommander.

That's a lot of good information that is generally very difficult to pull together in one place.

Clicking on links from the Dashboard, or using the menus, helps fleet staff quickly access the data they need. Intuitive forms, such as the "Manage Reservations" screen shown below, use icons and colors effectively to display information. In this case, a list of vehicle requests is presented to the fleet dispatcher.

	Status	Request Info	Schedule Information	Req/Conf #	Requestor	Driver	Vehicle Information
	Pending	02/08/2007 9:25:24 am **(Daily Rental)**	Pick-up: **02/12/2007 08:00 AM** Return: **02/12/2007 05:00 PM** Duration: **9** *hours*	**R000484** *Request ID*	**pmistry** Mistry, Pankaj 301-987-6543 pmistry@agilea...	**pmistry** Mistry, Pankaj 301-987-6543 pmistry@agilea...	Vehicle: E20-Accord **(Honda)** Site: **Germantown Campus** Type: **Mid-size**
D	Approved (Late Pickup)	02/08/2007 4:07:08 pm **(Daily Rental)**	Pick-up: **02/08/2007 04:30 PM** Return: **02/08/2007 07:00 PM** Duration: **2** *hours* **30** *minutes*	**100313** *Confirmation number*	**mwade** Wade, Matthew 301-555-1213 mwade@agilefl...	**esmith** Smith, Edwin (703) 968-7300 esmith@agileac...	Vehicle: E20-Accord **(Honda)** Site: **Germantown Campus** Type: **Mid-size**
D	Approved	02/10/2007 1:39:59 pm **(Daily Rental)**	Pick-up: **02/13/2007 06:00 AM** Return: **02/13/2007 05:00 PM** Duration: **11** *hours*	**100321** *Confirmation number*	**esmith** Smith, Edwin (703) 968-7300 esmith@agileac...	**esmith** Smith, Edwin (703) 968-7300 esmith@agileac...	Vehicle: G095-Cargo **(Ford)** Site: **Germantown Campus** Type: **Van**

Lists of vehicle requests are easy to use with the help of intuitive icons & hyperlinks

Another handy feature is the automatically-updating Maintenance Dashboard. This feature provides instant maintenance status and a launching point for performing common maintenance activities. The dashboard is also a convenient place to see maintenance statistics that are traditionally hard to "mine" from legacy maintenance applications.

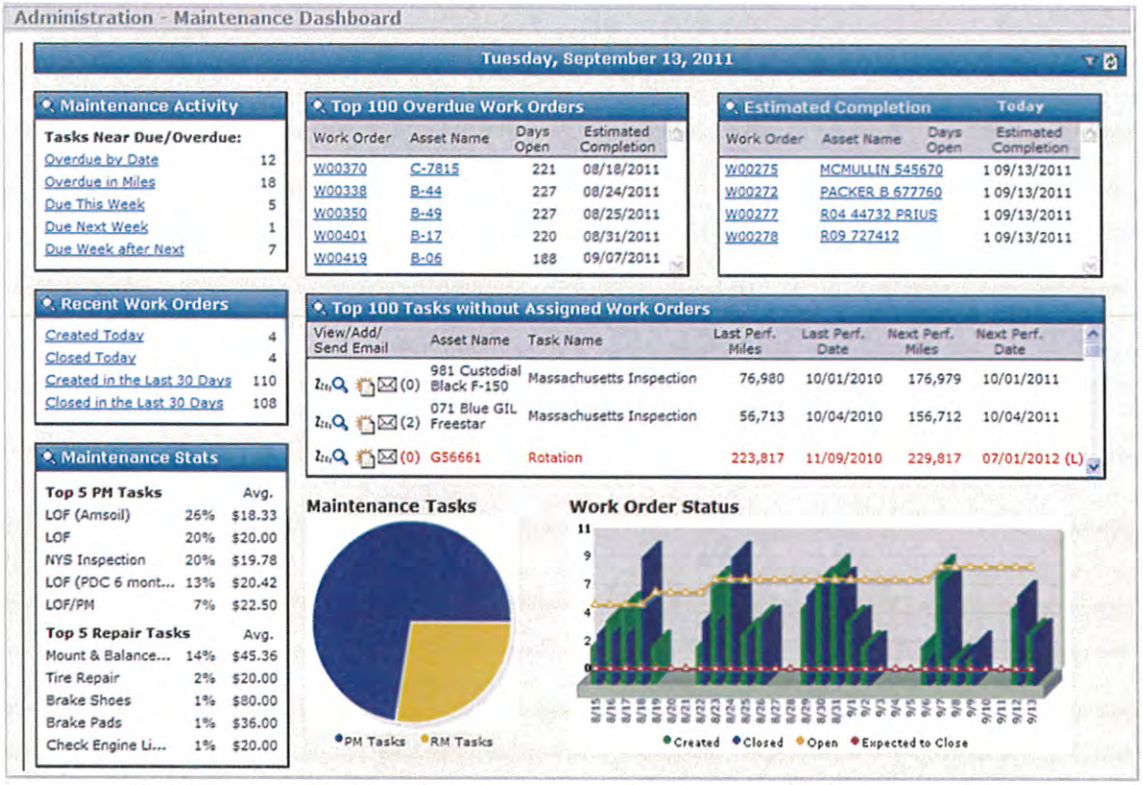

The Maintenance Dashboard provides an up-to-date summary of maintenance activities

With just a click of the mouse using the above dashboard, the following type of activities can be performed:

- Create a work order
- View overdue or near-due tasks
- View recent work orders created over a given period of time.
- Send an email notification of required maintenance to the persons responsible for a vehicle

The Vehicle Optimization chart shows a graphical view of the fleet. A similar screen helps administrators assign the "right" vehicle to each vehicle request.

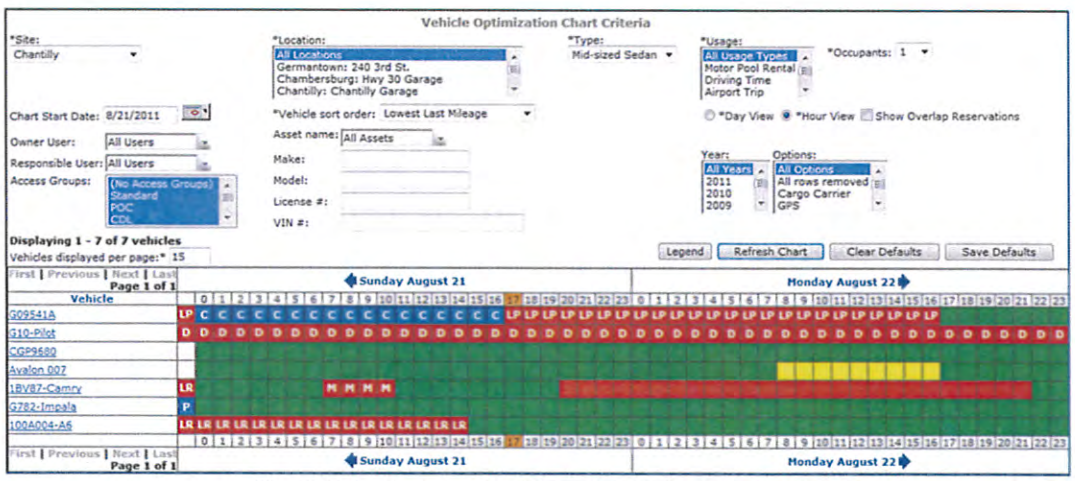

The Vehicle Optimization Chart depicts fleet use graphically.

User-friendly features such as the "Legend" help understand and use the Vehicle Optimization Chart.

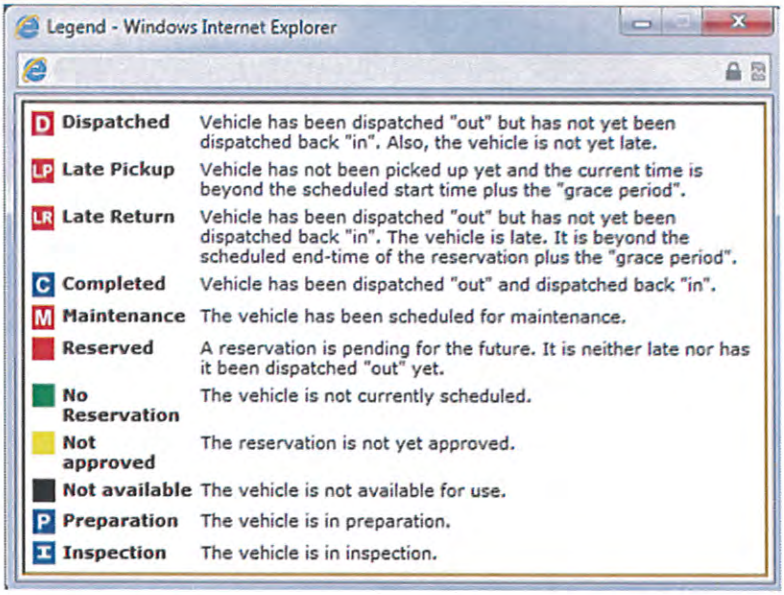

Legend - Windows Internet Explorer

D Dispatched	Vehicle has been dispatched "out" but has not yet been dispatched back "in". Also, the vehicle is not yet late.
LP Late Pickup	Vehicle has not been picked up yet and the current time is beyond the scheduled start time plus the "grace period".
LR Late Return	Vehicle has been dispatched "out" but has not yet been dispatched back "in". The vehicle is late. It is beyond the scheduled end-time of the reservation plus the "grace period".
C Completed	Vehicle has been dispatched "out" and dispatched back "in".
M Maintenance	The vehicle has been scheduled for maintenance.
Reserved	A reservation is pending for the future. It is neither late nor has it been dispatched "out" yet.
No Reservation	The vehicle is not currently scheduled.
Not approved	The reservation is not yet approved.
Not available	The vehicle is not available for use.
P Preparation	The vehicle is in preparation.
I Inspection	The vehicle is in inspection.

The legend is just one example of tools that help users understand FleetCommander

Standard management reports provide a wealth of information. All reports can be filtered before they are run to facilitate the drilling down into your critical fleet data. The report below shows very important fleet metrics such as utilization rates and the number of requests turned-down on a day-by-day basis. Note that *every* cell in this report is a hyperlink to more data.

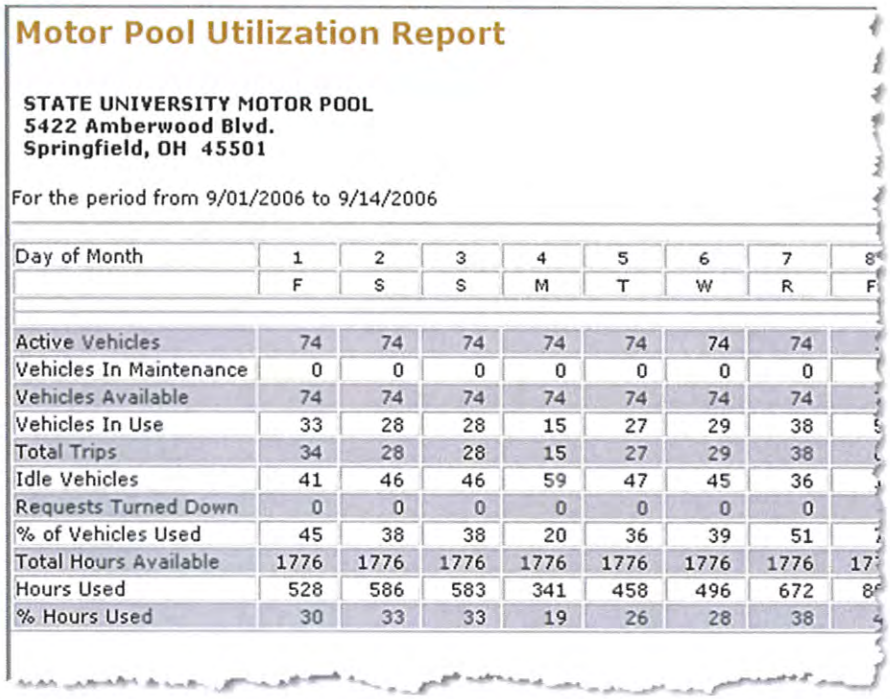

Motor Pool Utilization Report

STATE UNIVERSITY MOTOR POOL
5422 Amberwood Blvd.
Springfield, OH 45501

For the period from 9/01/2006 to 9/14/2006

Day of Month	1	2	3	4	5	6	7	8
	F	S	S	M	T	W	R	F
Active Vehicles	74	74	74	74	74	74	74	
Vehicles In Maintenance	0	0	0	0	0	0	0	
Vehicles Available	74	74	74	74	74	74	74	
Vehicles In Use	33	28	28	15	27	29	38	5
Total Trips	34	28	28	15	27	29	38	
Idle Vehicles	41	46	46	59	47	45	36	
Requests Turned Down	0	0	0	0	0	0	0	
% of Vehicles Used	45	38	38	20	36	39	51	
Total Hours Available	1776	1776	1776	1776	1776	1776	1776	17
Hours Used	528	586	583	341	458	496	672	8
% Hours Used	30	33	33	19	26	28	38	

The Motor Pool Utilization Report shows day-to-day utilization to help right-size your fleet

13) Provide a general narrative description of your pricing model identifying how the model works (line item and/or published catalog percentage discount).

Our pricing is line item pricing.

Our line item pricing is a derivative of our MSRP pricing model. Pricing is discounted for NJPA members. Discounts are equal to, or more than, 4.75% on all products and services.

14) Propose a strategy, process, and specific method of facilitating "Sourced Product/equipment and related services" or "Non-Standard Options" solution as defined herein.

Agile has a disciplined Change Request (CR) process for facilitating non-standard options, custom development, and integration with third party products and equipment. The CR process covers the complete system development life-cycle from definition of requirements all the way through test and implementation.

We'd welcome the opportunity to have evaluators talk with our reference clients to identify how well this process works. It is strongly grounded in the discipline of Systems Engineering.

15) Provide an overall proposed statement of method of pricing for individual line items, percentage discount off published product/equipment catalogs and/or category pricing percentage discount with regard to all equipment/products and related services and being proposed. Provide a SKU number for each item being proposed.

All of our individual line items are discounted a minimum of 4.75% off of our MSRP. Pricing is included in Attachment A.

16) Describe your ability to take advantage of, or operate with electronic marketplace solutions, if any.

Not applicable. See response to question 5.

17) If applicable, provide a "CORE LIST" of equipment/products and related services (defined as products/equipment or services most frequently used and highlighted with additional discounts when compared to the standard "Pricing") as a separate and named spreadsheet. Include special pricing, if any, on these items.

Not applicable.

18) If applicable, provide a "Hot List" format of specific product/equipment and related services as defined herein.

Not applicable.

19) Provide your NJPA customer volume rebate programs, as applicable.

There are no NJPA-specific customer volume rebate programs to date. We do offer volume discounts. These are reflected in our line item pricing. We would welcome the opportunity to discuss NJPA customer volume rebate programs that have worked well for NJPA vendors and members.

20) Identify any Total Cost of Acquisition (as defined herein) cost(s) which is NOT included "Pricing" submitted with your proposal response. Identify to whom these charges are payable to and their relationship to Proposer.

Not applicable.

21) If freight, delivery or shipping is an additional cost to the NJPA member, describe in detail the complete shipping and delivery program.

Shipping costs are included in all line item pricing.

22) As an important part of the evaluation of your offer, you must indicate the level of pricing you are offering.

Pricing is included as an attachment.

Prices offered in this proposal are (Your proposal will be deemed "Non-Responsive" if this question is not answered):

_____a. Pricing is the same as typically offered to an individual municipality, Higher ed or school district.

_____b. Pricing is the same as typically offered to GPOs, cooperative procurement organizations or state purchasing departments.

____X____c. Better than typically offered to GPOs, cooperative procurement organizations or state purchasing departments.

23) Do you offer quantity or volume discounts? __X___ YES _____ NO Outline guidelines and program.

Volume discounts are reflected in our line item product pricing for our FleetCommander solution.

24) Describe in detail your proposed exchange and return program(s) and policy(s).

Exchanges or returns are available at no cost to the customer for any equipment that is received dead on arrival. Should other special circumstances arise, we will resolve the issue with our customers on a case by case basis.

25) Specifically identify those shipping and delivery and exchange and returns programs as they relate to Alaska and Hawaii and any related off shore delivery of contracted products/ equipment and related services

There are no unique shipping and delivery requirements for initial delivery or for returns that are unique for Alaska and Hawaii customers.

26) Please describe any self-audit process/program you plan to employ to verify compliance with your anticipated contract with NJPA. Please be as specific as possible.

Agile engages an outside accounting firm, O'Brien Accounting, to assist with quarterly reviews of internal sales commission reports. This outside entity provides objectivity to the process used and provides a "second set of eyes" on the generated reports. This activity, which would be modified to include a self-audit of NJPA-related efforts, occurs on the following schedules:

Revenue Received Between	NJPA Report Prepared By:
January 01 and March 31	April 15
April 01 and June 30	July 15
July 1 and September 30	October 15
October 1 and December 31	January 15

We will use this same process to self-audit the NJPA program. It is anticipated that a separate class will be used in our accounting system to track NJPA transactions. Classes are an easy way to discern one type of cost from another and to easily show a subset of transactions on a single report.

Industry or Sector Specific Questions

1) NA

Signature: _____ Date: 5/10/2013

www.njpacoop.org

National Joint Powers Alliance®

202 12th Street NE
P.O. Box 219
Staples, MN 56479

Pricing was submitted with the response and are available upon request. Due to the difficulty in emailing such a large file they were not included.

As a public agency, NJPA proposals, responses and awarded contracts are a matter of public record, except for that data included in the proposals, responses and awarded contracts that is classified as nonpublic; thus, pursuant to NJPA policies and RFP terms and conditions, all documentation, except for data which is nonpublic, is available for review through a formal request process including a written request.

ANNUAL RENEWAL OF AGREEMENT

Made by and Between

Agile Access Control, Inc. (Vendor)
14101 Willard Rd., Suite A
Chantilly, VA 20151

and

National Joint Powers Alliance® (NJPA)
202 12th Street NE
Staples, MN 56479
Phone: (218) 894-1930

Whereas:

"Vendor" and "NJPA" have entered into an "Acceptance and Award #050613-AAC" for the procurement of Fleet Management and Related Technology Solutions, and having a maturity date of July 16, 2017, and which are subject to annual renewals at the option of both parties.

Now therefore:

"Vendor" and "NJPA" hereby desire and agree to extend and renew the above defined contract for the period of July 16, 2014 to July 16, 2015.

National Joint Powers Alliance® (NJPA)

By: _____, Its: Executive Director/CEO

Name printed or typed: Chad Coauette

Date _____

Agile Access Control, Inc.

By: _____, Its: President

Name printed or typed: Edwin E. Smith, president

Date 6/24/2014

If you do not desire to extend contract, please sign below and return this agreement.
Discontinue: We desire to discontinue the contract.

Signature: _____ Date: _____

ANNUAL RENEWAL OF AGREEMENT

Made by and Between

Agile Access Control, Inc. (Vendor)
14101 Willard Rd., Suite A
Chantilly, VA 20151

and

National Joint Powers Alliance® (NJPA)
202 12th Street NE
Staples, MN 56479
Phone: (218) 894-1930

Whereas:

"Vendor" and "NJPA" have entered into an "Acceptance and Award #050613-AAC" for the procurement of Fleet Management and Related Technology Solutions, and having a maturity date of July 16, 2017, and which are subject to annual renewals at the option of both parties.

Now therefore:

"Vendor" and "NJPA" hereby desire and agree to extend and renew the above defined contract for the period of July 16, 2015 to July 16, 2016.

National Joint Powers Alliance® (NJPA)

By: _____, Its: Executive Director/CEO

Name printed or typed: Chad Coauette

Date 6/10/15

Agile Access Control, Inc.

By: _____, Its: President

Name printed or typed: Edwin E Smith

Date 6/9/2015

If you do not desire to extend contract, please sign below and return this agreement.
Discontinue: We desire to discontinue the contract.

Signature: _____ Date: _____

ANNUAL RENEWAL OF AGREEMENT

Made by and Between

Agile Access Control, Inc. (Vendor)
14101 Willard Rd., Suite A
Chantilly, VA 20151

and

National Joint Powers Alliance® (NJPA)
202 12th Street NE
Staples, MN 56479
Phone: (218) 894-1930

Whereas:

"Vendor" and "NJPA" have entered into an "Acceptance and Award #051613-AAC" for the procurement of Fleet Management and Related Technology Solutions, and having a maturity date of July 16, 2017, and which are subject to annual renewals at the option of both parties.

Now therefore:

"Vendor" and "NJPA" hereby desire and agree to extend and renew the above defined contract for the period of July 16, 2016 to July 16, 2017.

National Joint Powers Alliance® (NJPA)

By: _____, Its: Executive Director/CEO

Name printed or typed: Chad Coauette

Date 6/2/16

Agile Access Control, Inc.

By: Edwin E. Smith, Its: President

Name printed or typed: Edwin E. Smith

Date 6/1/2016

If you do not desire to extend contract, please sign below and return this agreement.
Discontinue: We desire to discontinue the contract.

Signature: _____ Date: _____

ARF-6246 **Regular Agenda Item 4. F.**

Regular BOS Meeting

Meeting Date:	10/06/2020		
Submitted For:	Steve Sanders, Director		
Submitted By:	Betty Hurst, Contracts Administrator		
Department:	Public Works		
Fiscal Year:	2021	Budgeted?:	Yes
Contract Dates Begin & End:	10-06-20 to 06-30-21	Grant?:	No
Matching Requirement?:	No	Fund?:	Replacement

Information

Request/Subject

Approval to use Cooperative Agreement Sourcewell Contract No. 052417-CFC with Crafco, Inc. for the purchase of an Autoloader Crack Seal Machine.

Background Information

In 2019, the Board approved the purchase of a crack seal machine to replace the Consolidated Roads 2000 model that was costing too much in repairs and was unsafe to operate. There were 3 bids and the successful bidder gave a deep 14% discount price and it met all of the required specifications.

The Public Works staff likes the machine and have agreed that another machine should be purchased to make maintenance more efficient. Each region has to schedule time with the one machine and often times they could be crack sealing in both regions at the same time. Renting a machine is over $5000 a month and requires about six months of lead time.

Evaluation

The Consolidated Roads Division of the Public Works Department is asking to purchase the same machine again, with the same specifications. This would assist our maintenance teams in that they don't have to learn how to maintain or repair a different type of machine. The same type and size of the material may also be used so there are not excessive amounts of crack seal material left over. We could have one in each region and

assure that the road maintenance wouldn't be held up due to conflicting schedules.

Conclusion

The staff has concluded that two crack seal machines, one in each region would be more efficient and mean more maintenance on paved roads for Gila County. This activity always precludes the chip seal schedule and makes for longer-lasting chip seals.

Recommendation

The Public Works Director recommends the purchase of a machine through Crafco, Inc. under the Sourcewell Cooperative contract No. 052417-CFC in the amount of $87,160.33 for a new Autoloader SS125DC Crack Sealer in the Consolidated Roads Division.

Suggested Motion

Information/Discussion/Action to approve the use of Sourcewell Cooperative Purchasing Agreement No. 052417-CFC with Crafco, Inc. for the purchase of a new Autoloader SS125DC Crack Seal Machine in the amount of $87,160.33. **(Steve Sanders)**

Attachments

he purchase of Autoloader Crack Seal Machine.Agreement

Sourcewell Quote

Sourcewell Acceptance and Award-Crafco 052417

CONTRACT AGREEMENT

Contract Name: **Sourcewell-Crack Seal SS125DC with Autoloader** **Contract No.:** **Sourcewell No. 052417-CFC**

Statement of Purpose and Need (3-5 Sentences) Gila County wishes to utilize Cooperative Purchasing Agreement Sourcewell 052417-CFC with Crafco, Inc. All Documents executed by the Sourcewell Contract No. 052417-CFC, apply to this procurement between Gila County and Crafco, Inc.

INDEMNIFICATION: Contractor shall indemnify, defend, save and hold harmless the County of Gila and its officers, officials, agents, and employees (hereinafter referred to as "Indemnitee") from and against any and all claims, actions, liabilities, damages, losses, or expenses (including court costs, attorneys' fees, and costs of claim processing, investigation and litigation) (hereinafter referred to as "Claims") for bodily injury or personal injury (including death), or loss or damage to tangible or intangible property to the extent caused by the negligent or willful acts or omissions of Contractor or any of its owners, officers, directors, agents, employees or subcontractors. This indemnity includes any claim or amount arising out of or recovered under the Workers' Compensation Law or arising out of the failure of such contractor to conform to any federal, state or local law, statute, ordinance, rule, regulation or court decree. It is the specific intention of the parties that the Indemnitee shall, in all instances, except for Claims arising solely from the negligent or willful acts or omissions of the Indemnitee, be indemnified by Contractor from and against any and all claims. It is agreed that Contractor will be responsible for primary loss investigation, defense and judgment costs where this indemnification is applicable. In consideration of the award of this contract, the Contractor agrees to waive all rights of subrogation against the County, its officers, officials, agents and employees for losses arising from the work performed by the Contractor for the County.

IMMIGRATION LAW COMPLIANCE WARRANTY: As required by A.R.S. § 41-4401, Contractor hereby warrants its compliance with all federal immigration laws and regulations that relate to its employees and A.R.S. § 23-214(A). Contractor further warrants that after hiring an employee, it verifies the employment eligibility of the employee through the e-verify program. If Contractor uses any subcontractors in performance of the Agreement, subcontractors shall warrant their compliance with all federal immigration laws and regulations that relate to its employees and A.R.S. § 23-214(A), and subcontractors shall further warrant that after hiring an employee, such subcontractor verifies the employment eligibility of the employee through the e-verify program. A breach of this warranty shall be deemed a material breach of the Agreement subject to penalties up to and including termination of this Agreement. Contractor shall not be deemed in material breach if it and its subcontractors establish compliance with the employment verification provisions of Sections 274A and 274B of the federal Immigration and Nationality Act and the e-verify requirements contained in A.R.S. § 23-214(A). The County retains the legal right to inspect the papers of the Contractor and its subcontractors engaged in performance of this Agreement to ensure that the Contractor and its subcontractors are complying with the warranty. Any inspection will be conducted after reasonable notice and at reasonable times. If state law is amended, the parties may modify this paragraph consistent with state law.

Cancellation for Conflict of Interest. This Agreement is subject to cancellation for conflict of interest as provided in A.R.S. § 38-511, which is hereby fully incorporated herein by this reference as if the same as if fully set forth in this contract.

Renewal Option: ☒ **Yes** ☐ **No**

Contract End Date: **10-06-20 to 06-30-21**

Maximum Dollar Limit: **$87,160.33**

Contract Information

Firm Name:	**Crafco, Inc.**	**Contact Person:**	**Angie Hoaglin**
Address:	**6165 W. Detroit Street**	**Phone No:**	**602-276-0406**
City: **Chandler**	**State:** **AZ 85226**	**Fax:**	**Email:** Angie.hoaglin@crafco.com

Special Notes:
Gila County is part of the Sourcewell Cooperative Purchasing Cooperative, for Cooperative Purchasing. By using the Sourcewell Contract with Crafco, inc, it will save the County in both time and money for a rate that has already been established in the Sourcewell Procure bidding process.

Authorization to use a Cooperative Purchasing Agreement with the Sourcewell Cooperative Contract No. 052417-CFC for Purchase of equipment, supplies, training and services - approved this _____ day of _____2020.

GILA COUNTY BOARD OF SUPERVISORS

_____
Woody Cline, Board of Supervisors

ATTEST

_____

Marian Sheppard, Clerk of the Board

APPROVED AS TO FORM

_____
The Gila County Attorney's Office

SOURCEWELL PRICING WORKSHEET Contract #052417-CFC

DATE: 8/19/2020

PURCHASING AGENCY	CONTRACTOR	AUTHORIZED DISTRIBUTOR
BUYING AGENCY: Gila County ID# 12249	Crafco, Inc.	COMPANY
CONTACT PERSON: Brent Cline	Angie Hoaglin	Contact Name
PHONE: (928) 402-8526	602-276-0406	PHONE:
FAX: (928) 425-8104	480-961-0513	FAX:
EMAIL: bcline@gilacountyaz.gov	angie.hoaglin@crafco.com	EMAIL:

DELIVERED TO: 1400 E. Ash St., Globe, AZ 85501

EQUIPMENT PART #/DESCRIPTION:				Discounted Contract Price	
Part Number	Description				Price
47400-SRC	SUPERSHOT 125D W/100 CFM COMPRESSOR				$ 69,660.00
EQUIPMENT OPTIONS: (Listed in Contract)					
Price for options requiring mutiple units please list the total price not the each price.					
QTY/Part #/Description	Price	QTY/Part #/Description	Price		
		(2) 26119-SRC 3/8" SAFETY HOOK	$ 104.00		
20014-SRC PINTLE HITCH	$ 114.24	43416-SRC GRAVITY FEED KIT	$ 240.00		
24183-SRC SEVEN PIN ROUND CONNECTION	$ 54.99	51177-SRC AUTOLOADER	$ 7,280.00		
20120-SRC 18" HITCH EXTENSION	$ 496.00	43549-SRC SPARE TIRE KIT	$ 296.00		
24190K-SRC OVERNIGHT HEATER	$ 288.00	24086-SRC LOCKABLE BATTERY BOX	$ 236.00		
26058-SRC 10# FIRE EXTINGUISHER	$ 192.00	47500N-SRC ENGINE COVER ASSY	$ 2,440.00		
26059-SRC FIRE EXTINGUISHER BRACKET	$ 76.00	24096K-SRC FLASH BAR (ROTATING BEACON)	$ 440.64		
26098-SRC TOOL BOX	$ 76.80		$ -		
				Subtotal:	$ 12,334.67
UNPUBLISHED OPTIONS: (Items not shown it the Contract Price List)					
Price for options requiring mutiple units please list the total price not the each price.					
QTY/Part #/Description	Price	QTY/Part #/Description	Price		
	$ -		$ -		
	$ -		$ -		
	$ -		$ -		
	$ -		$ -		
	$ -		$ -		
	$ -		$ -		
				Subtotal:	$ -
	QUANTITY	1	Equipment Total:		$ 81,994.67
MATERIALS: (Listed in Contract Price list)					
Part #/Description	Units	Price/unit	TOTAL		
		$ -	$ -		
		$ -	$ -		
		$ -	$ -		
			Material Total:		$ -
TRADE-INS/DISC./FREIGHT/TAX					
Description	Price	Description	Price		
Sales tax (6.3%)	$ 5,165.66		$ -		
	$ -		$ -		
	$ -		$ -		
				Subtotal	$ 5,165.66
				TOTAL:	$ 87,160.33

Crafco Approval By: Date: 8/20/2020

Angie Hoaglin

Not Valid Without Approval

FORM E
CONTRACT ACCEPTANCE AND AWARD

(Top portion of this form will be completed by NJPA if the vendor is awarded a contract. The vendor should complete the vendor authorized signatures as part of the RFP response.)

NJPA Contract #: 052417-CFC

Proposer's full legal name: Crafco, Inc.

Based on NJPA's evaluation of your proposal, you have been awarded a contract. As an awarded vendor, you agree to provide the products and services contained in your proposal and to meet all of the terms and conditions set forth in this RFP, in any amendments to this RFP, and in any exceptions that are accepted by NJPA.

The effective date of the Contract will be October 2, 2017 and will expire on October 2, 2021 (no later than the later of four years from the expiration date of the currently awarded contract or four years from the date that the NJPA Chief Procurement Officer awards the Contract). This Contract may be extended for a fifth year at NJPA's discretion.

NJPA Authorized Signatures:

NJPA DIRECTOR OF COOPERATIVE CONTRACTS AND PROCUREMENT/CPO SIGNATURE

Jeremy Schwartz
(NAME PRINTED OR TYPED)

NJPA EXECUTIVE DIRECTOR/CEO SIGNATURE

Chad Coauette
(NAME PRINTED OR TYPED)

Awarded on September 29, 2017

NJPA Contract # 052417-CFC

Vendor Authorized Signatures:

The Vendor hereby accepts this Contract award, including all accepted exceptions and amendments.

Vendor Name Crafco, Inc.

Authorized Signatory's Title Vice President National Sales Manager

VENDOR AUTHORIZED SIGNATURE

N. Thomas Kelly
(NAME PRINTED OR TYPED)

Executed on Oct. 2nd, 2017

NJPA Contract # 052417-CFC

Crafco #052417-CFC

Pricing for contract #052417-CFC offers Sourcewell participating agencies a 5% to 20% discount based on equipment models and options.

ARF-6271 **Regular Agenda Item 4. G.**

Regular BOS Meeting

Meeting Date:	10/06/2020		
Submitted For:	Steve Sanders, Director		
Submitted By:	Betty Hurst, Contracts Administrator		
Department:	Finance		
Fiscal Year:	2021	Budgeted?:	Yes
Contract Dates Begin & End:	12-15-20 to 10-08-21	Grant?:	No
Matching Requirement?:	No	Fund?:	Renewal

Information

Request/Subject

Advertisement of Invitation for Bids No. 091120 Rim Trail Bridge Replacement (Structure No. 07881)

Background Information

Rim Trail Bridge is over the East Verde River 12 miles north of Payson on Bridge Road. Structure Number 07881 is on the ADOT(Arizona Department of Transportation) list. The records show it was built in 1984 and put into service in 1985. The bridge serves 56 residential parcels and is a single width of 10 feet and is 40 feet long. In May of 2020, the Rim Trail Bridge received a Sufficiency Rating of 16. Anything under 50 should be considered for replacement. The bridge condition is also listed as poor. The bridge is inspected by ADOT every two years. Public Works engaged an engineering firm in February 2018 to design the new bridge. In May 2020, the plans were complete so the project could be let in FY2021.

Evaluation

To advertise now and put a contract in place in December will allow the contractor to obtain materials in time to begin the construction on March 1, 2021. The project is going to fall into FY2021 for a completion time in September 2021. An engineer's estimate of $409,433 doesn't include construction oversight or inspection. Those items will have to be looked at separately.

Conclusion

Public Works staff is recommending the advertisement of bids to attract the best contractor for the project. Bridge experience is required and staff will check the contractor's references for previous projects.

Recommendation

Steve Sanders, Public Works Department Director, recommends that the Rim Trail Bridge Replacement Project be approved to advertise as soon as possible. This is an important bridge for the community.

Suggested Motion

Information/Discussion/Action to authorize advertisement of Invitation for Bids Number 091120-*Rim Trail Bridge Replacement Project (Structure No. 07881).* **(Steve Sanders)**

Attachments

Request to Advertise

IFB No. 091120-Rim Trail Bridge Replacement

RimTrail_AppendixA_StandardDetails

RimTrail_AppendixB_GeotechnicalReport

Rim Trail AppendixC_2020-0511_RimTrailPlans_Sealed

Rim Trail Bridge pictures

EXHIBIT "H"

GILA COUNTY DEPARTMENTAL REQUEST TO ADVERTISE FOR BIDS

All departments procuring purchases in excess of $50,000 that requires advertising for bids must follow the Procurement Procedures and must complete Item "I" of this form prior to such purchase. The requesting department is responsible for writing necessary specifications and routing them, including this form and completed Bid Request Form to the Purchasing Department. This Form must be completed and have a copy of the specifications attached before routing begins. All Requests and Specifications will be in accordance with the Arizona Revised Statutes and the latest version of the Gila County Purchasing Policy and Procedures.

IS THIS A REQUEST FOR *Check one*

Bids X Proposals _____

Qualifications _____

REQUEST NUMBER

_____

(For Procurement Use Only)

I. DESCRIPTION: *List item(s) to be purchased, purpose, specific summary, estimated cost and funding source.*

FUNDING: Engineers Estimate $409,433 PROJECT: BRIDGES_RimTrail

Fund 6510 Dept No. 341 Program 526 Location 000 Account 4500.71

INTENT

Replacement of Rim Trail Bridge over Verde River on Bridge Road beginning in December 2020 and completing in September 2021.

Signed: _____ Date 9/17/2020

Elected Official or Department Head

II. DEPARTMENTAL INFORMATION ONLY: *Action Dates*

DATE				
	Department Receipt	9/17/2020	Placed on Agenda	9/21/2020
	Presented to Board	10/6/2020	Approved to Call	
	Delivered to Paper		Paper Name	Payson Roundup
	Advertised From	10/13/2020	Advertised To	10/20/2020
	Closing Date	11/17/2020	Bid Award Date	12/15/2020
	Awarded To		Pre-Bid Meeting Date	

III. OTHER APPROVAL: *Only as necessary*

Department Name: _____

Department Head Signature _____ Date _____

Department Name: _____

Department Head Signature _____ Date _____

IV. APPROVED

Finance Director Signature _____ Date _____

GILA COUNTY
REQUEST FOR INVITATION FOR BIDS

RIM TRAIL BRIDGE REPLACEMENT (STRUCTURE NO. 07881)

BID NUMBER 091120

BIDDER'S INFORMATION
CONTRACT DOCUMENTS AND SPECIFICATIONS

BOARD OF SUPERVISORS
Woody Cline, Chairman
Tommie C. Martin, Vice Chairman
Timothy R. Humphrey, Member

COUNTY MANAGER
James Menlove

PUBLIC WORKS DIRECTOR
Steve Sanders

INVITATION FOR BIDS
BID NO. 091120

Sealed bids will be received by **Gila County Procurement, in the Copper Building Conference Room, 1400 East Ash St., Globe, AZ 85501, until 4:00 P.M. (AZ Time), Tuesday, November 17, 2020** for the **Bid No. 091120 - Rim Trail Bridge Replacement, GILA COUNTY, ARIZONA,** in strict accordance with the rules and regulations of the Gila County Procurement Code on file in the office of the Gila County Clerk of the Board, Globe, Arizona. **No bids will be accepted after 4:00 P.M. The Bids will be publicly opened and read aloud at 4:00 P.M., Arizona time, at the location and date listed above via Zoom App.**

All Bids shall be made on the Invitation for Bids forms included in the Contract Documents and shall include all applicable taxes.

Hard copy Plans, Specifications and Contract documents are available and may be obtained from the office of Engineering Services, 928-402-8502, Gila County Public Works Division, 745 North Rose Mofford Way, Globe, AZ. An optional attendance **pre-bid meeting** will take place at 2:00 P.M. on October 28, 2020. This meeting will be conducted online via the Zoom App. Invitations will be sent to the email address on file with the meeting I.D. number and password.

Each Bid submitted, either by hand, United States Postal Service, or other carrier, shall be sealed and plainly marked **BID NO. 091120 -** Rim Trail Bridge Replacement**,** All Bids shall be mailed or delivered to the **Gila County Procurement Department, Attention: Betty Hurst, Contracts Administrator, 1400 East Ash St., Globe, AZ 85501**. Gila County Engineering Services and Board of Supervisors of Gila County will not be responsible for those bids submitted that are not marked appropriately or sent to the wrong address. The prevailing clock shall be the atomic clock in the reception area of the Copper Building.

Contractors are invited to be present at the opening of bids but absence will not be considered cause for disqualification. This will be the only time, until bid award, this information will be revealed.

Contractors shall be responsible for any licenses or permits required by the regulatory agency of the State of Arizona that apply to the performance of this contract.

After the Contractor who is determined to be most advantageous to the county has been selected through the source selection process, negotiations may be conducted for the purpose of developing a recommended Contract for Award.

The Gila County Board of Supervisors reserves the right to reject all bids, or to waive any informality in any bid. All procurement activities conducted by Gila County are in conformance with the rules and regulations of the Gila County Clerk of the Board's office. A copy of the Code is available for review in the Clerk of the Board's office, Globe, AZ.

Dates advertised in the Payson Roundup: **October 13, 2020 and October 20, 2020**

Signed:_____ Date: _____/_____/_____
Woody Cline, Chairman of the Board of Supervisors

Signed: _____ Date: _____/_____/_____
Gila County Attorney's Office

NOTIFICATION TO BIDDERS

BIDDERS ARE HEREBY NOTIFIED:

1. The bidder must supply all the information required by the bid documents. All proposals shall be made on the bid forms prepared by Gila County. The proposal must include the following forms in triplicate and **all with original signatures on hardcopy paper**:

   - Bid Proposal (pages 127 to 129)
   - Bid Schedule (pages 130 to 131)
   - Surety (Bid) Bond (page 132)
   - Qualification & Certification Form (pages 133 to 134)
   - Reference List (pages 135)
   - Affidavit of Non-Collusion (page 136)
   - Subcontracting Certification (page 137)
   - Check List & Addenda Acknowledgment (page 138)

   Failure to include all above listed documents, all with original signatures, may invalidate the bid. Prices shall include all applicable taxes.

2. **Proposal Guaranty** -Proposals shall be accompanied by a certified check, cashier's check or bid bond for 10 percent (10%) of the total contract price bid.

3. **Delivery of Proposal** - Each bid shall be sealed and plainly marked **"Bid No. 091120" - RIM TRAIL BRIDGE REPLACEMENT**, on the outer most envelope or label. If courier is used, bidder shall instruct the courier to deliver the package by**, Tuesday, November 17, 2020**, **4:00 PM**, to the Gila County Procurement Department, Attention: Betty Hurst, Contracts Administrator, at 1400 East Ash, Globe, Arizona 85501. **No bids will be accepted after 4:00 P.M. AZ Time, Tuesday, November 17, 2020. Bids will be opened at 4:00 P.M., Tuesday November 17, 2020.**

4. **Rejection of Bids** -The Owner reserves the right to reject any and all bids, and to waive all or any informalities in the bids.

5. **Plans and Specifications** – A pdf version of plans, specifications and all other documents required by bidders may be obtained by email of bhurst@gilacountyaz.gov. No charge for a pdf version. Bids must be submitted by hardcopy on paper with original signatures.

   A hardcopy version of plans may be obtained with a deposit of $20 per set and $10 for mailing is required. $20 of which will be refunded per set upon return of the documents in good, usable order within seven (7) days of bid award. Payment shall be by check or money order only. No cash or credit cards will be accepted.

   Gila County
   Finance Department
   1350 E. Monroe
   Globe, Arizona 85501

6. **Arizona Contractor's License** - **Prior to submission of bids**, bidders must have a valid Arizona Contractor's License of a type which meets all criteria and requirements to perform the work as specified in the contract documents in accordance with the **Arizona State Registrar of Contractors**.

7. **Pre-bid Meeting** – An optional attendance **pre-bid meeting** will take place at 2:00 P.M. on October 28, 2020. This meeting will be conducted online via the Zoom App. Invitations will be sent to the email addresses on file with the meeting I.D. number and password.

8. **Bid Opening Information** – Contractors are invited to be present at the opening of bids but absence will not be considered cause for disqualification. This will be the only time, until bid award, this information will be revealed. A Zoom meeting will be set up online via the Zoom App. prior to the bid opening and those that wish to attend may contact Betty Hurst via email.

9. **Request for Clarifications**
   Requests for clarification shall be made to Betty Hurst, Contracts Administrator at bhurst@gilacountyaz.gov in writing (phone: 928-402-4355, fax: 928-402-4386) submitted no later than 4:00 P.M., AZ time, on Monday, November 9, 2020**.** A response will be issued to all plan holders no later than 4:00 P.M., AZ time, on Thursday, November 12, 2020.

Table of Contents

INVITATION FOR BIDS 2
NOTIFICATION TO BIDDERS 3
SPECIFICATIONS: 7
GENERAL REQUIREMENTS: 7
SECTION 101 DEFINITIONS AND TERMS: 12
SECTION 102 BIDDING REQUIREMENTS AND CONDITIONS 17
SECTION 103 AWARD AND EXECUTION OF CONTRACT 21
SECTION 104 SCOPE OF WORK: 23
SECTION 105 CONTROL OF WORK: 27
SECTION 106 CONTROL OF MATERIAL 33
SECTION 107 LEGAL RELATIONS AND RESPONSIBILITY TO PUBLIC 35
SECTION 108 PROSECUTION AND PROGRESS 46
SECTION 109 MEASUREMENT AND PAYMENT 53
SECTION 201 CLEARING AND GRUBBING 57
SECTION 202 REMOVAL OF STRUCTURES AND OBSTRUCTIONS: 57
SECTION 203 EARTHWORK 59
SECTION 205 GRADING ROADWAY FOR PAVEMENT 60
SECTION 207 DUST PALLIATIVE 60
SECTION 303 AGGREGATE SUBBASES AND AGGREGATE BASES 60
SECTION 403 ASPHALTIC CONCRETE HOT PLANT REQUIREMENTS 60
SECTION 404 BITUMINOUS TREATMENTS 61
SECTION 409 ASPHALTIC CONCRETE (MISCELLANEOUS STRUCTURAL) 62
SECTION 601 CONCRETE STRUCTURES 67
SECTION 604 STEEL STRUCTURES 81
SECTION 701 MAINTENANCE AND PROTECTION OF TRAFFIC 82
SECTION 803 LANDSCAPE PLATING MATERIALS 82
SECTION 810 EROSION CONTROL AND POLLUTION PREVENTION 86
SECTION 901 MOBILIZATION 86
SECTION 902 CHAIN LINK FENCE 87
ITEM 9030008 FENCE (SEE FENCE DETAIL, SHEET 6) 88
ITEM 9031001 TEMPORARY FENCE 89
ITEM 9050701 W-BEAM & POST RAILING (TXDOT TYPE T631LS) 90
ITEM 9130005 RIPRAP (GABIONS) 91
ITEM 9240010 FORCE ACCOUNT WORK (UNFORESEEN CONDITIONS) 98
SECTION 925 CONSTRUCTION SURVEYING AND LAYOUT 98
SECTION 1003 REINFORCING STEEL 104
SECTION 1005 BITUMINOUS MATERIALS 106
SECTION 1006 PORTLAND CEMENT CONCRETE 110
SECTION 1011 JOINT MATERIALS 122
SECTION 1013 BEARING PADS 123
SECTION 1015 EPOXY MATERIALS 123
CONTRACT FORMS LIST 126
PROPOSAL 127
BIDDING SCHEDULE 130
SURETY (BID) BOND 132
QUALIFICATION AND CERTIFICATION FORM 133

REFERENCE LIST.....135
NO COLLUSION 136
INTENTIONS CONCERNING SUBCONTRACTING.....137
BIDDERS CHECKLIST & RECEIPT OF ADDENDA 138
CONTRACT 139
CONTRACT PERFORMANCE WARRANTY.....148

APPENDICES

APPENDIX A - REFERENCED MAG & ADOT STANDARD DETAILS (see attachment)
APPENDIX B – GEOTECHNICAL REPORT (see attachement)
APPENDIX C – PROJECT PLANS (see attachment)

SPECIAL PROVISIONS FOR
RIM TRAIL BRIDGE REPLACEMENT (STRUCTURE NO. 07881)

The proposed work is located in the northern part of unincorporated Gila County, approximately 12 miles north of the Town of Payson. The work for this improvement project will be performed on Bridge Road. The work consists of removing an existing railcar bridge and constructing a new bridge crossing at the East Verde River including roadway excavation, embankment construction, grading, furnishing and placing aggregate base, asphaltic concrete pavement and other incidental work as shown on the project plans (see **APPENDIX C**) and as described in these Special Provisions.

SPECIFICATIONS:

The plans and these Special Provisions reference certain Standard Specifications and Standard Details developed by the Maricopa Association of Governments (MAG) and the Arizona Department of Transportation (ADOT). The following separate documents shall be used accordingly:

Arizona Department of Transportation, Standard Specifications for Road and Bridge Construction, Edition of 2008.
Arizona Department of Transportation, Construction Standard Drawings, 2012 edition.
Maricopa Association of Governments, Uniform Standard Specifications for Public Works Construction, 2020 Edition.
Maricopa Association of Governments, Uniform Standard Details for Public Works Construction, 2020 Edition.

Wherever reference in the above cited Standard Specifications is made to MAG or ADOT it shall refer to Owner as defined in Section 101-02 herein these Special Provisions.

In the event of any conflict between the plans and Standard Specifications, the plans shall prevail. In the event of any conflict between these Special Provisions and the plans or Standard Specifications, these Special Provisions shall prevail.

GENERAL REQUIREMENTS:

CONSTRUCTION WATER

The Contractor shall obtain an adequate water supply and furnish all construction water for the work specified herein. There will be no separate measurement or direct payment for obtaining, furnishing and applying construction water. The cost being considered as included in the total cost of the contract.

FIRE PREVENTION

If during the project fire restrictions are implemented, the Contractor shall be responsible for compliance with Tonto National Forest and Gila County fire prevention measures.

CONTRACTOR'S YARD

The Owner shall provide land, right-of-way, and easements for all work specified in this contract, except that the Contractor shall provide additional land if required for the erection of temporary construction facilities for storage of his material, together with right of access to same. The Contractor shall not enter or occupy with men, tools, equipment or materials, any private property without written consent of the Owner thereof.

The Contractor shall submit at the preconstruction conference a map showing the proposed location of his Contractor's yard. The location of the yard is subject to the approval of the Owner. The Contractor is responsible for the security of his yard and the equipment and materials stored at the yard or construction site. Damage, theft, vandalism, or loss of such equipment or materials is the responsibility of the Contractor. The Contractor will not be compensated for replacement, repair, or refusal of materials by the Engineer damaged by vandalism or theft. The Contractor will take whatever measures are necessary to secure his yard, equipment, and materials. Security measures such as yard fences, security guards, locks, chains, etc. are incidental to the work for this project.

See Section 901 Mobilization for additional information.

CONTRACT TIME

Contractor shall complete all project work, including material procurement, within two hundred and forty (280) calendar days from the date the Contractor receives the Notice to Proceed from the County.

The Contractor shall not start construction work before 03/01/2021.

TEMPORARY CONSTRUCTION EASEMENTS:

The Department has acquired temporary construction easements (TCE) where needed to complete the work. The Contractor shall not disturb existing improvements within the TCE which are not in conflict with the project. The Contractor shall keep his operations within the limits of the temporary fence and TCE as delineated on the project plans. The Contractor shall restore the area within the TCE to its original condition when it is no longer needed for construction. No direct measurement or payment will be made for the restoration of the TCE area, the cost being considered as included in the price bid for the contract items.

VERIFICATION OF EXISTING FEATURES:

The locations and dimensions of existing roadway features shown on the plans are based on as-built plans, aerial photographs, and field surveys. It shall be the Contractor's responsibility to field-verify the information given on the plans wherever that information affects the new work.

Significant differences between the measured and plan information shall be submitted to the Engineer prior to proceeding with the work. Minor adjustments to proposed improvements to the extent they are required to match existing construction and do not affect the disposition of other project features, will not require review or approval by the Engineer.

ACCESS REQUIREMENTS:

The Contractor shall maintain access to all driveways during their hours of operations. Access to adjacent private driveways shall be provided during all non-working hours. Where property has more than one point of access, no more than one access may be restricted or closed at a time.

The Contractor shall coordinate through the Engineer to inform all property and business operators that may be affected by any restrictions at least 72 hours in advance as a result of construction activities of the scope of work, duration of construction activities, and the possible interference with their day to day activities. The Contractor shall coordinate with the Engineer to communicate any business or residential access restrictions in writing with the affected businesses or residents at least one week in advance of the restriction.

The Contractor shall coordinate with the Engineer to make a good faith effort to make personal contact with affected property owners or business operators. If primary access cannot be maintained, the Contractor shall provide an alternative that will be pre-determined with the business prior to instituting the closure or restriction. If the property owner or business operator cannot be contacted, then the Engineer shall be the sole judge for the approval of any closures or restrictions.

EROSION / SEDIMENT CONTROL AND STORMWATER QUALITY:

The Contractor shall give attention to the impact of the construction operations upon natural landscape, and shall take care to maintain natural surroundings undamaged at no additional cost to the Owner. The Contractor shall minimize soil disturbance by implementing Low Impact Development (LID) methods to control erosion as close as possible to the source of disturbance.

The Contractor shall use all means necessary to significantly reduce impacts by staging**/**stockpiling and carrying out project activities in such a way as to curtail**/**contain the potential for erosion and discharge of pollutants from the project site.

Fine particles including minor miscellaneous dirt, dust, rock fragments or construction debris that may be associated with stormwater discharges into catch basins shall be prevented**/** controlled to maximum extent practicable (MEP) at no additional cost to the Owner.

When needed**,** the Contractor shall apply perimeter control Best Management Practices (BMPs) (Wattles) on the down-slope perimeter of construction disturbed areas**,** unpaved on-site staging, and stockpiling at no additional cost to the Owner. To prevent sediment from bypassing the wattle ends, the end of the wattles shall be turned up the slopes for a minimum of 3 feet to form an “L” shape. No portion of the wattle shall be installed within 6 feet from the edge of the pavement. Wattles shall not be placed over any driveways or access roads that intersect with the roadway mainline. Additionally, wattles shall **not** be placed on the flow path of inlets and outlets of drainage facilities. Perimeter control BMPs (wattles) shall be installed in accordance with the manufacturer’s instructions. The Contractor shall adjust the field layout of erosion control and sediment prevention elements as approved by the Engineer. The Contractor shall also observe

ADOT traffic safety standards when installing perimeter control BMPs in the traffic clear zone/recovery area.

During construction the contactor shall minimize vehicular travel or equipment operation on the unpaved soil areas to MEP. The Contractor shall develop and implement procedures to avoid earth disturbance, soil compaction, and damage to vegetative cover from vehicular travel or equipment operation during inclement weather or unsuitable soil conditions. The Contractor shall stabilize all construction disturbed soil areas at no additional cost to the Owner.

No grout, concrete or wash water shall be disposed within the project limits or its vicinity. The Contractor shall install concrete washout BMP as needed and under the direction of the Engineer at no additional cost to the Owner. This BMP shall include proper disposal of all excess grout, concrete, and wash water.

All Rock Mulch and Rock Riprap used for erosion/sediment control shall be placed and shaped as shown on the BMPs' plans/details. Rock Mulch/Riprap materials shall be fractured/crushed rocks in angular shape and as defined in the Section 810 of the ADOT Standard Specifications and these special provisions. Natural river-run materials, especially the rounded natural river rocks/cobblestones are not acceptable.

The Contractor shall not use unpaved areas within the project limits for staging or stockpiling without first installing erosion control and sediment prevention BMPs and as directed and approved by the Engineer. Staging and stockpiling on the unpaved areas shall be avoided to MEP.

EROSION/SEDIMENT CONTROL BEYOND THE PROJECT LIMITS:

The Contractor shall apply erosion/sediment and water quality protection BMPs as required by the commercial material source owner and environmental permit standard at no additional cost to the Owner.

The Contractor shall apply erosion/sediment and water quality protection BMPs for off-project-site staging, material storage, maintenance yard, disposal spots, and stockpiling areas as required by the facility owner and environmental permit standard at no additional cost to the Owner.

When needed, the Contractor shall only use off-project-site staging, material storage, maintenance yard, disposal spots, and stockpiling areas covered with existing environmental permit for operation.

ENVIRONMENTAL COMMITMENTS:

The following environmental mitigation measures are not subject to change without written approval from the Owner.

- If vegetation clearing will occur during the migratory bird breeding season (March 1 - August 31), the Contractor shall avoid any active bird nests. If the active nests cannot be avoided, the Contractor shall notify the Gila County Project Manager to evaluate the situation. During the non-breeding season (September 1 - February 28) vegetation removal is not subject to this restriction.

- If suspected hazardous materials are encountered during construction, work shall cease at that location and the Contractor will be notified. The Contractor will contact the Gila County Project Manager immediately, and make arrangements for assessment, treatment, and disposal of those materials.

- If previously unreported cultural resources are encountered during ground disturbing activities, all work must immediately cease within 30 meters (100 feet) until a qualified archaeologist has documented the discovery and evaluated its eligibility for the Arizona or National Register of Historic Places in consultation with Gila County, the Arizona State Museum, the State Historic Preservation Office, and Tribes, as appropriate. Work must not resume in this area without approval of Gila County.

- If human remains are encountered during ground-disturbing activities, all work must immediately cease within 30 meters (100 feet) of the discovery and the area must be secured. The Arizona State Museum burial coordinator, Gila County, State Historic Preservation Office, and appropriate Tribes must be notified of the discovery. All discoveries will be treated in accordance with Arizona Revised Statute (A.R.S. § 41-865), and work must not resume in this area without authorization from the Arizona State Museum and Gila County.

SECTION 101 DEFINITIONS AND TERMS:

101-01 BLANK

101-02 DEFINITIONS:

Whenever the following terms are used in these specifications, in the contract, in any documents or other instruments pertaining to construction where these specifications govern, the intent and meaning shall be interpreted as follows:

MAG. Maricopa Association of Governments.

ADOT. Arizona Department of Transportation

ADOT STANDARD SPECIFICATIONS. Arizona Department of Transportation Standard Specifications for Road and Bridge Construction, Edition of 2008.

ADVERTISEMENT. A public announcement, as required by local law, inviting bids for work to be performed and materials to be furnished.

ASTM. The American Society for Testing and Materials.

AASHTO. The American Association of State Highway and Transportation Officials.

AWARD. The acceptance, by the Owner, of the successful bidder's proposal.

BIDDER. Any individual, partnership, firm, or corporation, acting directly or through a duly authorized representative, who submits a proposal for the work contemplated.

BOARD OF SUPERVISORS. The Gila County Board of Supervisors acting under the authority of the laws of the State of Arizona.

CALENDAR DAY. Every day shown on the calendar.

CERTIFIED FLAGGER. An individual who has been trained and certified by the Arizona Department of Transportation, an Arizona County or Municipal agency, the Federal Highway Administration, or the Highway agency of another state, to control traffic in a construction zone. Individuals certified outside Arizona must also exhibit familiarity with Arizona laws.

CHANGE ORDER. A written order by the Engineer or Owner to the Contractor covering changes in the plans, specifications, or proposal quantities and establishing the basis of payment and contract time adjustment, if any, for the work affected by such changes. The work, covered by a change order, shall be within the scope of the contract.

CONSTRUCTION LIMITS. Construction limits shall be defined as that area of the public right-of-way, easement or area shown on the construction plans to be disturbed as a part of the contract for this project.

CONTRACT. The written agreement covering the work to be performed. The awarded contract shall include, but is not limited to: the Advertisement; the Contract form; the Proposal; the

Performance Bond; the Payment Bond; any required insurance certificates; the Specifications; the Plans; and any addenda issued to bidders.

CONTRACT ITEM (PAY ITEM). A specific unit of work for which a price is provided in the contract. All pay items on this contract will be measured in English units.

CONTRACT TIME. The number of calendar days or working days, stated in the proposal, allowed for completion of the contract, including authorized time extensions. If a calendar date of completion is stated in the proposal, in lieu of a number of calendar or working days, the contract shall be completed by that date.

CONTRACTOR. The individual, partnership, firm, or corporation primarily liable for the acceptable performance of the work contracted and for the payment of all legal debts pertaining to the work who acts directly or through lawful agents or employees to complete the contract work.

CONTRACTOR'S ENGINEER. The Arizona Registered Professional Civil Engineer, individual, partnership, firm, or corporation, duly authorized by Contractor to be responsible for engineering supervision, quality control and certification of the Contract work.

DEPARTMENT. The term Department in the ADOT Standard Specifications and supplements references the Arizona Department of Transportation. Department shall reference OWNER for this contract work.

ENGINEER. See OWNER.

EQUIPMENT. All machinery, together with the necessary fuel and supplies for upkeep and maintenance including, but not limited to, all tools and apparatus necessary for the proper construction and acceptable completion of the work.

EXTRA WORK. An item of work not provided for in the awarded contract as previously modified by change order or supplemental agreement, but which is found by the Owner's Engineer to be necessary to complete the work within the intended scope of the contract as previously modified.

INSPECTOR. An authorized representative of the Owner's Engineer assigned to make all necessary quality assurance inspections and/or tests of the work performed or being performed, or of the materials furnished or being furnished by the Contractor.

INTENTION OF TERMS. Whenever, in these specifications or on the plans, the words "directed," "required," "permitted," "ordered," "designated," "prescribed," or words of like import are used, it shall be understood that the direction, requirement, permission, order, designation, or prescription of the Owner's Engineer is intended; and similarly, the words, "approved," "acceptable," "satisfactory," or words of like import, shall mean approved by, or acceptable to, or satisfactory to the Owner's Engineer, subject in each case to the final determination of the Owner.

Any reference to a specific requirement of a numbered paragraph of the contract specifications or a cited standard shall be interpreted to include all general requirements of the entire section, specification item, or cited standard that may be pertinent to such specific reference.

LABORATORY. A testing laboratory as may be designated or approved by the Owner’s Engineer to test construction materials and products.

LABOR AND MATERIALS BOND. The approved form of security furnished by the Contractor and his surety as a guaranty that he will pay in full all bills and accounts for materials and labor used in the construction of the work. Also known as Payment Bond.

MAJOR AND MINOR CONTRACT ITEMS. A major contract item shall be any item that is listed in the proposal, the total cost of which is equal to or greater than 10 percent of the total amount of the awarded contract. All other items shall be considered minor contract items.

MATERIALS. Any substance specified for use in the construction of the contract work.

MUTCD. The Manual on Uniform Traffic Control Devices for Streets and Highways, U.S. Department of Transportation, Federal Highway Administration, 2003 Edition, with current revisions.

NOTICE TO PROCEED. A written notice to the Contractor to begin the actual contract work on a previously agreed to date. If applicable, the Notice to Proceed shall state the date on which the contract time begins.

OWNER. The term Owner shall mean the contracting agency signatory to the contract being Gila County or the “County”.

OWNER'S ENGINEER. The individual, partnership, firm, or corporation duly authorized by the Owner to be responsible for engineering supervision of the contract work and acting directly or through an authorized representative.

PAVEMENT. The combined surface, base course, and sub base course, if any, considered as a single unit.

PERFORMANCE BOND. The approved form of security furnished by the Contractor and his surety as a guaranty that the Contractor will complete the work in accordance with the terms of the contract.

PLANS. The official drawings or exact reproductions, approved by the Owner's Engineer, which show the location, character, dimensions and details of the work to be done and which are to be considered as a part of the contract, supplementary to the specifications.

PROJECT. The agreed scope of work for accomplishing specific tasks.

PROPOSAL (BID, BID PROPOSAL). The written offer of the bidder (when submitted on the approved proposal form) to perform the contemplated work and furnish the necessary materials in accordance with the provisions of the plans and specifications.

PROPOSAL GUARANTY. The security furnished with a proposal to guarantee that the bidder will enter into a contract if his proposal is accepted by the Owner.

SPECIFICATIONS. A part of the contract containing the written directions and requirements for completing the contract work. Standards for specifying materials or testing which are cited in the contract specifications by reference shall have the same force and effect as if included in the contract physically.

STRUCTURES. Facilities such as bridges, culverts, catch basins, inlets, retaining walls, cribbing, storm and sanitary sewer lines, water lines, underdrains, electrical ducts, manholes, handholes, lighting fixtures and bases, transformers, flexible and rigid pavements, navigational aids, buildings, vaults, and other manmade features that may be encountered in the work and not otherwise classified herein.

SUBGRADE. The soil that forms the pavement foundation.

SUPERINTENDENT. The Contractor's authorized representative who is present on the work site during progress, and is authorized to receive and fulfill instructions from the Owner's Engineer, and who shall supervise and direct the construction.

SUPPLEMENTAL AGREEMENT. A written agreement between the Contractor and the Owner covering: 1) work that would increase or decrease the total dollar amount of the awarded contract, or any major contract item, by more than 25 percent, such increased or decreased work being within the scope of the originally awarded contract, or 2) work that is not within the scope of the originally awarded contract.

SURETY. The corporation, partnership, or individual, other than the Contractor, executing payment or performance bonds which are furnished to the Owner by the Contractor.

WORK. The furnishing of all labor, materials, tools, equipment and incidentals necessary or convenient to the Contractor's performance of all duties and obligations imposed by the contract, plans, and specifications.

WORK DAY (WORKING DAY). A work day shall be any day other than a legal holiday, Saturday, or Sunday on which the normal working forces of the Contractor may proceed with regular work for at least 6 hours toward completion of the contract, unless work is suspended for causes beyond the Contractor's control. Saturdays, Sundays and holidays on which the Contractor's forces engage in regular work, after obtaining written permission from the Owners Engineer, which requires the presence of an inspector, will be considered and applied as working days.

WORK WEEK. A work week shall consist of forty (40) hours beginning on Sunday and ending on Saturday. Should the Contractor engage in work exceeding the forty (40) hour work week which requires the presence of an inspector, as determined by the Owners Engineer, the Contractor shall reimburse the County for all overtime hours.

OVERTIME HOURS. Any and all hours worked which are other than a normal work week. Contractor must give prior written notification to the Owners Engineer, for any and all overtime hours to be worked. It shall be at the Owner's discretion to provide an inspector at the worksite to ensure compliance during any and all overtime hours worked.

OVERTIME PAY. Any and all pay resulting from overtime hours worked.

OWNER'S INSPECTOR'S OVERTIME PAY. Any and all pay to the Owner's Inspector for overtime hours worked resulting from the Contractor having received approval for overtime hours. The inspector's overtime pay shall be the actual monies paid by the County and shall be reimbursed by the Contractor to the County. Certified payrolls for the Owner's Inspector's

Overtime will be submitted to the Contractor. The cost for the Owner's Inspector's Overtime Pay will be deducted from the Contractor's billing.

SUBSTANTIAL COMPLETION. Per Section 105.19 of the ADOT Standard Specifications unless modified herein.

SECTION 102 BIDDING REQUIREMENTS AND CONDITIONS

102-01 THRU 102-03 BLANK

102-04 CONTENTS OF PROPOSAL FORMS:

The Owner shall furnish bidders with proposal forms. All papers bound with or attached to the proposal forms are necessary parts of the proposal. The proposal submitted by the bidder must include the entire bid packet.

The plans, specifications, and other documents designated in the proposal whether attached or not to the proposal are considered as a part of and included with the proposal.

102-05 ISSUANCE OF PROPOSAL FORMS:

The Owner reserves the right to refuse to issue a proposal form to a prospective bidder should such bidder be in default for any of the following reasons:

(a) Failure to comply with any prequalification regulations of the Owner, if such regulations are cited, or otherwise included, in the proposal as a requirement for bidding.
(b) Failure to pay, or satisfactorily settle, all bills due for labor and materials on former contracts in force (with the Owner) at the time the Owner issues the proposal to a prospective bidder.
(c) Contractor default under previous contracts with the Owner.
(d) Unsatisfactory work on previous contracts with the Owner.

102-06 INTERPRETATION OF ESTIMATED PROPOSAL QUANTITIES:

An estimate of quantities of work to be done and materials to be furnished under these specifications is given in the proposal. It is the result of careful calculations and is believed to be correct. It is given only as a basis for comparison of proposals and the award of the contract. The Owner does not expressly or by implication agree that the actual quantities involved will correspond exactly therewith; nor shall the bidder plead misunderstanding or deception because of such estimates of quantities, or of the character, location, or other conditions pertaining to the work. **Payment to the Contractor will be made only for the actual quantities of work performed or materials furnished in accordance with the plans and specifications.** It is understood that the quantities may be increased or decreased as hereinafter provided in the subsection titled ALTERATION OF WORK AND QUANTITIES of Section 104-02(A) without in any way invalidating the unit bid prices.

102-07 EXAMINATION OF PLANS, SPECIFICATIONS, AND SITE OF WORK:

The bidder is expected to carefully examine the site of the proposed work, the proposal, plans, specifications, and contract forms. He shall satisfy himself as to the character, quality, and quantities of work to be performed, materials to be furnished, and as to the requirements of the proposed contract. The submission of a proposal shall be prima facie evidence that the bidder has made such examination and is satisfied as to the conditions to be encountered in performing the work and as to the requirements of the proposed contract, plans and specifications.

If any person contemplating submitting a bid for the proposed contract is in doubt as to the true meaning of any part of the plans, specifications, or other proposed contract documents, or finds discrepancies in, or omissions from the drawings or specifications, he may submit to the Owner's Engineer a written request for an interpretation or correction thereof. The person submitting the request will be responsible for its prompt delivery. Any interpretation or correction of the contract

documents will be made only by addendum duly issued and a copy of such addendum will be made or delivered to each person having received a set of such documents. The Owner will not be responsible for any other explanations or interpretations of the contract documents.

Any addenda or bulletins issued during the time of bid preparations, forming a part of the contract documents furnished the bidder for the preparation of his bid, shall be covered in the bid, and shall be made a part of the contract.

102-08 PREPARATION OF PROPOSAL:
The bidder shall submit his proposal on the forms furnished by the Owner. No forms shall be detached from the bid packet. The proposal must include the entire bid packet. All blank spaces in the proposal forms must be correctly filled in where indicated for each and every item for which a quantity is given. The bidder shall state the price (written in ink or typed) in NUMERALS for which he proposes to do each pay item furnished in the proposal. The TOTAL AGGREGATE AMOUNT bid shall be stated in both WORDS and NUMERALS. A minimum of one (1) original and two (2) copies all with original signatures shall be submitted.

The bidder shall sign his proposal correctly and in ink. If the proposal is made by an individual, his name and mailing address must be shown. If made by a partnership, the name and mailing address of each member of the partnership must be shown. If made by a corporation, the person signing the proposal shall give the name of the state under which the laws of the corporation were chartered and the name, titles, and business address of the president, secretary, and the treasurer. Anyone signing a proposal as an agent shall file evidence of his authority to do so and that the signature is binding upon the firm or corporation.

102-09 BLANK

102-10 IRREGULAR PROPOSALS:
Proposals shall be considered irregular for the following reasons:

(a) If the proposal is on a form other than that furnished by the Owner, or if the Owner's form is altered, or if any part of the proposal form is detached.
(b) If there are unauthorized additions, conditional or alternate pay items, or irregularities of any kind which make the proposal incomplete, indefinite, or otherwise ambiguous.
(c) If the proposal does not contain a unit price for each pay item listed in the proposal, except in the case of authorized alternate pay items, for which the bidder is not required to furnish a unit price.
(d) If the proposal contains unit prices that are obviously unbalanced.
(e) If the proposal is not accompanied by the proposal guaranty specified by the Owner.

The Owner reserves the right to reject any irregular proposal and the right to waive technicalities if such waiver is in the best interest of the Owner and conforms to local laws and ordinances pertaining to the letting of construction contracts.

102-11 DELIVERY OF PROPOSAL:
Each proposal submitted shall be placed in a sealed envelope plainly marked with the project number, name of project, and name and business address of the bidder on the outside. When sent by mail, preferably registered, or courier, the sealed proposal, marked as indicated above, should be enclosed in an additional envelope. No proposal will be considered unless received at

the place specified in the advertisement before the time specified. Proposals received after the specified time shall be returned to the bidder unopened.

102-12 PROPOSAL GUARANTY:
Each proposal shall be accompanied by a certified check, cashier's check or surety bond for ten percent (10%) of the amount of the bid included in the proposal as a guarantee that the Contractor will enter into a contract to perform the proposed work in accordance with the plans and specifications.

102-13 WITHDRAWAL OR REVISION OF PROPOSALS:
A bidder may withdraw or revise (by withdrawal of one proposal and submission of another) a proposal provided that the bidder's request for withdrawal is received by the Owner in writing or by telegram before the time specified for receipt of bids. Revised proposals must be received at the place specified in the advertisement before the time specified for receipt of bids.

102-14 BLANK

102-15 PUBLIC OPENING OF PROPOSALS:
Proposals shall be opened and read publicly at the time and place specified in the advertisement. Bidders, their authorized agents, and other interested persons are invited to attend.

Proposals that have been withdrawn (by written or telegraphic request) or received after the time specified shall be returned to the bidder unopened.

This will be the only time, until bid award, this information will be revealed.

102-GC1 DISQUALIFICATION OF BIDDERS:
A bidder shall be considered disqualified for any of the following reasons:

(a) Submitting more than one proposal from the same partnership, firm, or corporation under the same or different name.
(b) Evidence of collusion among bidders. Bidders participating in such collusion shall be disqualified as bidders for any future work of the Owner until any such participating bidder has been reinstated by the Owner as a qualified bidder.
(c) If the bidder is considered to be in "default" for any reason specified in the subsection titled ISSUANCE OF PROPOSAL FORMS of Section 102-05.
(d) Failure to submit all required official bid forms.

102-GC2 PROTESTS:
Only other bidders have the right to protest. A protest of a proposed award or of an award must be filed within ten (10) days after the bid award by the Gila County Board of Supervisors and must be sent to the Board of Supervisors. A protest must be in writing and must include:

(a) Name, address and telephone number of the protester.
(b) Signature of the protester or its representative, and evidence of authority to sign.
(c) Identification of the contract and the solicitation or contract number.
(d) Detailed statement of the legal and factual grounds of protest including copies of relevant documents.
(e) The form of relief requested.

All protests shall be sent to the attention of the Gila County Board of Supervisors, 1400 E. Ash Street, Globe, Arizona 85501.

SECTION 103 AWARD AND EXECUTION OF CONTRACT

103-01 CONSIDERATION OF PROPOSALS:

After the proposals are publicly opened and read, they will be compared on the basis of the summation of the products obtained by multiplying the estimated quantities shown in the proposal by the unit bid prices. If a bidder's proposal contains a discrepancy between unit bid prices written in words and unit bid prices written in numbers, the unit price written in words, unless obviously incorrect, shall govern.

Until the award of a contract is made, the Owner reserves the right to reject a bidder's proposal for any of the following reasons:

(a) If the proposal is irregular as specified in the subsection titled IRREGULAR PROPOSALS of Section 102-10.
(b) If the bidder is disqualified for any of the reasons specified in the subsection titled DISQUALIFICATION OF BIDDERS of Section 102-GC1.

In addition, until the award of a contract is made, the Owner reserves the right to reject any or all proposals; waive technicalities, if such waiver is in the best interest of the Owner and is in conformance with applicable state and local laws or regulations pertaining to the letting of construction contracts; advertise for new proposals; or proceed with the work otherwise. All such actions shall promote the Owner's best interests.

103-02 THRU 103-03 BLANK

103-04 AWARD OF CONTRACT:

The award of contract, if it is to be awarded, shall be made within sixty (60) calendar days of the date specified for publicly opening proposals, unless otherwise specified herein.

This contract will be awarded to the responsible bidder whose bid conforms to the invitation and whose bid is the most advantageous to the Owner concerning price, conformity to the specifications and other factors.

103-05 CANCELLATION OF AWARD:

The Owner reserves the right to cancel the award without liability to the bidder, except return of proposal guaranty, at any time before a contract has been fully executed by all parties and is approved by the Owner in accordance with the subsection titled APPROVAL OF CONTRACT of Section 103-GC1.

103-06 RETURN OF PROPOSAL GUARANTY:

All proposal guaranties, except those of the two (2) lowest bidders, will be returned immediately after the Owner has made a comparison of bids as hereinbefore specified in the subsection titled CONSIDERATION OF PROPOSALS of Section 103-01. Proposal guaranties of the two lowest bidders will be retained by the Owner until such time as an award is made, at which time the unsuccessful bidder's proposal guaranty will be returned as soon as the Owner receives the contract bonds as specified in the subsection titled REQUIREMENTS OF CONTRACT BONDS of Section 103-07.

103-07 REQUIREMENTS OF CONTRACT BONDS:

At the time of the execution of the contract, the successful bidder shall furnish the Owner surety bond or bonds which have been fully executed by the bidder and his surety guaranteeing the

performance of the work and the payment of all legal debts that may be incurred by reason of the Contractor's performance of the work. The surety and the form of the bond or bonds shall be acceptable to the Owner. Unless otherwise specified in this subsection, the surety bond or bonds shall be in a sum equal to the full amount of the contract. All bonds shall conform to the requirements of A.R.S. §34-222 and §34-223. §

103-08 EXECUTION OF CONTRACT:
The successful bidder shall sign (execute) the necessary agreements for entering into the contract and return such signed contract to the Owner, along with the fully executed surety bond or bonds specified in the subsection titled REQUIREMENTS OF CONTRACT BONDS of Section 103-07, the Contractor's Statement of Insurance and an original Certificate of Insurance conforming with the requirements of Section 107-14, within 10 calendar days from the date mailed or otherwise delivered to the successful bidder. If the contract is mailed, special handling is recommended.

103-GC1 APPROVAL OF CONTRACT:
Upon receipt of the contract and contract bond or bonds that have been executed by the successful bidder, the Owner shall complete the execution of the contract in accordance with local laws or ordinances, and return the fully executed contract to the Contractor. Delivery of the fully executed contract to the Contractor shall constitute the Owner's approval to be bound by the successful bidder's proposal and the terms of the contract. **This agreement is subject to cancellation pursuant to A.R.S. §38-511.**

103-09 FAILURE TO EXECUTE CONTRACT:
Failure of the successful bidder to execute the contract as specified in the subsection titled EXECUTION OF CONTRACT of Section 103-08 and furnish an acceptable surety bond or bonds within the 10-calendar-day period specified in the subsection titled REQUIREMENTS OF CONTRACT BONDS of Section 103-07 shall be just cause for cancellation of the award and forfeiture of the proposal guaranty, not as a penalty, but as liquidation of damages to the Owner.

SECTION 104 SCOPE OF WORK:

104-01 INTENT OF CONTRACT:

The intent of the contract is to provide for construction and completion, in every detail, of the work described. It is further intended that the Contractor shall furnish all labor, materials, equipment, tools, and supplies required to complete the work in accordance with the plans, specifications, and terms of the contract.

104-02(A) ALTERATION OF WORK AND QUANTITIES:

The Owner reserves and shall have the right to make such alterations in the work as may be necessary or desirable to complete the work originally intended in an acceptable manner. Unless otherwise specified herein, the Owner's Engineer shall be and is hereby authorized to make such alterations in the work as may increase or decrease the originally awarded contract quantities, provided that the aggregate of such alterations does not change the total contract cost or the total cost of any major contract item by more than twenty-five percent (25%) (total cost being based on the unit prices and estimated quantities in the awarded contract). Alterations which do not exceed the twenty-five percent (25%) limitation shall not invalidate the contract nor release the surety, and the Contractor agrees to accept payment for such alterations as if the altered work had been a part of the original contract. These alterations which are for work within the general scope of the contract shall be covered by "Change Orders" issued by the Owner's Engineer. Change order for altered work shall include extensions of contract time where, in the Owner's Engineer's opinion, such extensions are commensurate with the amount and difficulty of added work.

Should the aggregate amount of altered work exceed the twenty-five percent (25%) limitation hereinbefore specified, such excess altered work shall be covered by supplemental agreement. If the Owner and the Contractor are unable to agree on a unit adjustment for any contract item that requires a supplemental agreement, the Owner reserves the right to terminate the contract with respect to the item and make other arrangements for its completion.

All supplemental agreements shall require consent of the Contractor's surety and separate performance and payment bonds.

104-02(B) OMITTED ITEMS:

The Owner's Engineer may, in the Owner's best interest, omit from the work any contract item, except major contract items. Major contract items may be omitted by a supplemental agreement. Such omission of contract items shall not invalidate any other contract provision or requirement.

Should a contract item be omitted or otherwise ordered to be non-performed, the Contractor shall be paid for all work performed toward completion of such item prior to the date of the order to omit such item. Payment for work performed shall be in accordance with the subsection titled PAYMENT FOR OMITTED ITEMS of Section 109-05.

104-02(C) EXTRA WORK:

Should acceptable completion of the contract require the Contractor to perform an item of work for which no basis of payment has been provided in the original contract or previously issued change orders or supplemental agreements, the same shall be called EXTRA WORK. Extra work that is within the general scope of the contract shall be covered by written change order. Change orders for such extra work shall contain agreed unit prices for performing the change order work in accordance with the requirements specified in the order, and shall contain any adjustment to

the contract time that, in the Owner's Engineer's opinion, is necessary for completion of such extra work.

When determined by the Owner's Engineer to be in the Owner's best interest, he may order the Contractor to proceed with extra work by force account as provided in the subsection titled PAYMENT FOR EXTRA AND FORCE ACCOUNT WORK of Section 109-04.

Extra work that is necessary for acceptable completion of the project, but is not within the general scope of the work covered by the original contract, shall be covered by an agreement as hereinbefore defined as a SUPPLEMENTAL AGREEMENT.

Any claim for payment of extra work that is not covered by written agreement (change order or supplemental agreement) shall be rejected by the Owner.

104-03 **DISPUTE & RESOLUTION:**

- **Initial Notification & Dispute of Resolution:** As required by these Specifications or any time the Contractor believes the action or decision of the County, lack of action by the County, or for some other reason will result in or necessitate the revision of the Contract, the County Engineer must be notified immediately. If within two (2) working days the identified issue has not been resolved between the Contractor and the County, the Contractor shall provide a written notice. At a minimum, the written notice shall provide a description of the nature of the issue, the time and date the problem was discovered, and if appropriate, the location of the issue. After initial written notice has been provided, the County Engineer will proceed in accordance with MAG Uniform Standard Specifications Subsection 104.2. In addition to proceeding in accordance with Subsection 104.2, the Contractor and the County must make every effort to resolve the issue identified in the initial notice. Only if the issue cannot be quickly resolved will it be necessary to proceed to the next step in accordance with MAG Specs Subsection 110.2.2 Dispute Resolution.
- **Process for Dispute Resolution:** If the Contractor rejects the decision of the County according to Subsection 110.2.2(B), the Contractor may begin the Administration Process to resolve the dispute. All dispute resolutions shall be handled in accordance with MAG Spec's Subsection 110.3, Administrative Process for Dispute Resolution.

The administrative process for the resolution of disputes is sequential in nature and is composed of the following levels: Level I (County Project Manager), Level II (County Engineer, Level III (Public Works Director).

The provision set forth in Subsection 110.2 is a contractual obligation assumed by the Contractor in executing the Contract. It is understood that the Contractor will be forever barred from recovering against the County if the Contractor fails to give notice of any act or failure to act, by the County, or the happening of any event, thing, or occurrence, in accordance with Subsection 104.2, Alteration of Work.

Dispute Review Board: If the Dispute Review Board is utilized as prescribed in Subsection 110.3.3, the County Engineer shall be notified within thirty (30) days after the Level III Representative decision. The Dispute Review Board is a three (3) member board independent of the parties involved in the issue. The County and Contractor shall each select a member for this board. The third (3rd) member shall be a mutually agreed upon independent member. This Review Board must be selected within fourteen (14) calendar days after notice to the Level III Representative. Each member shall agree to impartially serve the County and Contractor. Fees and expenses of the Board Members are to be shared equally by the County and the Contractor.

The Dispute Review Board shall meet within thirty (30) days of the selection of the board, unless, by mutual agreement, another date is selected. The scope of the Dispute Review Board shall be restricted and limited to the matters originally presented to the Level III Representative for decision or determination and shall include no other matters. The Board shall consider and evaluate the dispute and render a written decision that assigns financial responsibilities and allocates adjustments in the contact time, if applicable, within seven (7) calendar days after the meeting. The decision of the Dispute Review Board will be final.

104-04 MAINTENANCE OF TRAFFIC:

It is the explicit intention of the contract that the safety of all traffic, vehicular and pedestrian, as well as the Contractor's equipment and personnel, is the most important consideration.

With respect to his own operations and the operations of all his subcontractors, the Contractor shall provide marking, lighting, and other acceptable means of identifying personnel, equipment, vehicles, storage areas, and any work area or condition that may be hazardous to the operation of all traffic, vehicular and pedestrian.

When the contract requires the maintenance of vehicular traffic on an existing road, street, or highway during the Contractor's performance of work that is otherwise provided for in the contract, plans, and specifications, the Contractor shall keep such road, street, or highway open to all traffic and shall provide such maintenance as may be required to accommodate traffic. The Contractor shall furnish, erect, and maintain barricades, warning signs, flaggers, and other traffic control devices in reasonable conformity with the MUTCD, unless otherwise specified herein. The Contractor shall also construct and maintain in a safe condition any temporary connections necessary for ingress to and egress from abutting property or intersecting roads, streets or highways. Unless otherwise specified herein, the Contractor will not be required to furnish snow removal for such existing road, street, or highway.

The Contractor shall make his own estimate of all labor, materials, equipment, and incidentals necessary for providing the maintenance of pedestrian and vehicular traffic as specified in this subsection.

104-05 RIGHTS IN AND USE OF MATERIALS FOUND IN THE WORK:

Should the Contractor encounter any materials such as (but not restricted to) sand, stone, gravel, slag, or concrete slabs within the established lines, grades, or grading sections, the use of which is intended by the terms of the contract to be either embankment or waste, he may at his option either:

(a) Use such material in another contract item, providing such use is approved by the Owner's Engineer and is in conformance with the contract specifications applicable to such use; or,
(b) Remove such material from the site, upon written approval of the Owner's Engineer; or,
(c) Use such material for his own temporary construction on site; or,
(d) Use such material as intended by the terms of the contract.

Should the Contractor wish to exercise option (a), (b), or (c), he shall request the Owner's Engineer's approval in advance of such use. Should the Owner's Engineer approve the Contractor's request to exercise option (a), (b), or (c), the Contractor shall be paid for the excavation or removal of such material at the applicable contract price. The Contractor shall replace, at his own expense, such removed or excavated material with an agreed equal volume

of material that is acceptable for use in constructing embankment, backfills, or otherwise to the extent that such replacement material is needed to complete the contract work. The Contractor shall not be charged for his use of such material so used in the work or removed from the site.

Should the Owner's Engineer approve the Contractor's exercise of option (a), the Contractor shall be paid, at the applicable contract price, for furnishing and installing such material in accordance with requirements of the contract item in which the material is used.

It is understood and agreed that the Contractor shall make no claim for delays by reason of his exercise of option (a), (b), or (c).

The Contractor shall not excavate, remove, or otherwise disturb any materials, structure, or part of a structure which is located outside the lines, grades, or grading sections established for the work, except where such excavation or removal is provided for in the contract, plans, or specifications.

104-06 THRU 104-07 BLANK

104-08 PREVENTION OF AIR AND NOISE POLLUTION: Per Section 104.08 of the ADOT Standard Specifications unless modified herein.

104-09 PROTECTION OF LANDSCAPE DEFACEMENT; PROTECTION OF STREAMS, LAKES AND RESERVOIRS: Per Section 104.09 of the ADOT Standard Specifications unless modified herein.

104-10 CONTRACTOR'S RESPONSIBILITY FOR WORK:
Until the Owner's Engineer's final written acceptance of the entire completed work, excepting only those portions of the work accepted in accordance with the subsection titled PARTIAL ACCEPTANCE of Section 105-20(A), the Contractor shall have the charge and care thereof and shall take every precaution against injury or damage to any part due to the action of the elements or from any other cause, whether arising from the execution or from the non-execution of the work. The Contractor shall rebuild, repair, restore, and make good all injuries or damages to any portion of the work occasioned by any of the above causes before final acceptance and shall bear the expense thereof except damage to the work due to unforeseeable causes beyond the control of and without the fault or negligence of the Contractor, including but not restricted to acts of God such as earthquake, tidal wave, tornado, hurricane or other cataclysmic phenomenon of nature, or acts of the public enemy or of governmental authorities.

If the work is suspended for any cause whatever, the Contractor shall be responsible for the work and shall take such precautions necessary to prevent damage to the work. The Contractor shall provide for normal drainage and shall erect necessary temporary structures, signs, or other facilities at his expense.

104-11 thru 104-13 BLANK

104-14 FINAL CLEAN UP:
Before final acceptance, all private or public property and grounds occupied by the Contractor in connection with the work shall be cleaned of all rubbish, excess materials, temporary structures and equipment, and all parts of the work shall be left in a condition acceptable to the Owner's Engineer.

SECTION 105 CONTROL OF WORK:

105-01 AUTHORITY OF THE OWNER'S ENGINEER:

The Owner shall decide any and all questions which may arise as to the quality and acceptability of materials furnished, based upon the Contractor's Engineer's certification for the quality and acceptability work performed, and as to the manner of performance and rate of progress of the work. He shall decide all questions which may arise as to the interpretation of the specifications or plans relating to the work, the fulfillment of the contract on the part of the Contractor, and the rights of different contractors on the project. The Owner shall review and determine, based upon the Contractor's Engineer's certifications on amounts, quality of work and materials furnished, the amount and quality of the several kinds of work performed and materials furnished which are to be paid for under contract.

105-02 THRU 105-03 BLANK

105-04 CONFORMITY WITH PLANS AND SPECIFICATIONS:

All work and materials furnished shall be the full responsibility of the Contractor and shall be in reasonably close conformity with the lines, grades, grading section, cross sections, dimensions, material requirements, and testing requirements that are specified (including specified tolerances) in the contract, plans, or specifications, and shall be certified by the Contractor's Engineer.

If the Owner finds the materials furnished, work performed, or the finished product not within reasonably close conformity with the plans and specifications, but that the portion of the work affected will, in his opinion, result in a finished product having a level of safety, economy, durability and workmanship acceptable to the Owner, he will advise the Contractor of his determination that the affected work be accepted and remain in place. In this event, the Owner will document his determination and recommend to the Contractor a basis of acceptance which will provide for an adjustment in the contract price for the affected portion of the work. The Owner's determination and recommended contract price adjustments will be based on good engineering judgment and on such tests or retests by the Contractor's Engineer, and at the Contractor's expense, of the affected work as are, in his opinion, needed. Changes in the contract price shall be covered by contract modifications (change order or supplemental agreement) as applicable.

If the Owner finds the materials furnished, work performed, or the finished product are not in reasonably close conformity with the plans and specifications and have resulted in an unacceptable finished product, the affected work or materials shall be removed and replaced or otherwise corrected by and at the expense of the Contractor in accordance with the Owner’s written orders.

For the purpose of this subsection, the term "reasonably close conformity" shall not be construed as waiving the Contractor's responsibility to complete the work in accordance with the contract, plans and specifications. The terms shall not be construed as waiving the Owner's right to insist on strict compliance with the requirements of the contract, plans, and specifications during the Contractor's prosecution of the work, when, in the Owner's opinion, such compliance is essential to provide an acceptable finished portion of the work.

For the purpose of this subsection, the term "reasonably close conformity" is also intended to provide the Owner with the authority to use good engineering judgment in his determinations as to acceptance of work that is not in strict conformity but will provide a finished product equal to or better than that intended by the requirements of the contract, plans and specifications.

105-05 BLANK

105-06 COORDINATION OF CONTRACT, PLANS AND SPECIFICATIONS:
The contract, plans, specifications, and all referenced standards cited are essential parts of the contract requirements. A requirement occurring in one is as binding as though occurring in all. They are intended to be complementary and to describe and provide for a complete work. In case of discrepancy or conflict, the order in which they govern shall be as follows:

(A) Supplemental Agreements
(B) Special Provisions
(C) Project Plans
(D) Standard Drawings
(E) Standard Specifications

The Contractor shall not take advantage of any apparent error or omission on the plans or specifications. In the event the Contractor discovers any apparent error or discrepancy, he shall immediately call upon the Owner for his interpretation and decision, and such decision shall be final.

105-07 COOPERATION OF CONTRACTOR: Per Section 105.07 of the ADOT Standard Specifications unless modified herein.

105-08 COOPERATION WITH UTILITY COMPANIES: Per Section 105.08 of the ADOT Standard Specifications unless modified herein.

105-09 COOPERATION BETWEEN CONTRACTORS: Per Section 105.09 of the ADOT Standard Specifications unless modified herein.

105-10 CONSTRUCTION STAKES, LINES AND GRADES: Per Section 105.10 of the ADOT Standard Specifications unless modified herein.

105-11 AUTHORITY AND DUTIES OF INSPECTORS:
Inspectors employed by the Owner shall be authorized to inspect all work done and all material furnished. Such inspection may extend to all or any part of the work and to the preparation, fabrication, or manufacture of the materials to be used. Inspectors are not authorized to revoke, alter, or waive any provision of the contract. Inspectors are not authorized to issue instructions contrary to the plans and specifications or to act as foreman for the Contractor.

Inspectors employed by the Owner are authorized to notify the Contractor or his representative of any failure of the work or materials to conform to the requirements of the contract, plans, or specifications and to reject such nonconforming materials in question until such issues can be referred to the Owner's Engineer for his decision.

105-12 INSPECTION OF WORK: Per Section 105.12 of the ADOT Standard Specifications unless modified herein.

105-13 REMOVAL OF UNACCEPTABLE AND UNAUTHORIZED WORK:

All work which does not conform to the requirements of the contract, plans, and specifications will be considered unacceptable, unless otherwise determined acceptable by the Owner as provided in the subsection titled CONFORMITY WITH PLANS AND SPECIFICATIONS of Section 105-04.

Unacceptable work, whether the result of poor workmanship, use of defective materials, damage through carelessness, or any other cause found to exist prior to the final acceptance of the work, shall be removed immediately and replaced in an acceptable manner in accordance with the provisions of the subsection titled CONTRACTOR'S RESPONSIBILITY FOR WORK of Section 104-10.

No work shall be done without lines and grades having been given by the Contractor's Engineer and authorized by the Owner. Work done contrary to the instructions of the Owner, work done beyond the lines shown on the plans or as given, except as herein specified, or any extra work done without authority will be considered as unauthorized and will not be paid for under the provisions of the contract. Work so done may be ordered removed or replaced at the Contractor's expense.

Upon failure on the part of the Contractor to comply as soon as possible with any order of the Owner made under the provisions of this subsection, the Owner will have authority to cause unacceptable work to be remedied or removed and replaced and unauthorized work to be removed and to deduct the costs (incurred by the Owner) from any monies due or to become due the Contractor.

105-14 LOAD RESTRICTIONS: Per Section 105.14 of the ADOT Standard Specifications unless modified herein.

105-15 MAINTENANCE DURING CONSTRUCTION:
The Contractor shall maintain the work during construction and until the work is accepted. This maintenance shall constitute continuous and effective work prosecuted day by day, with adequate equipment and forces so that the work is maintained in satisfactory condition at all times.

In the case of a contract for the placing of a course upon a course or subgrade previously constructed, the Contractor shall maintain the previous course or subgrade during all construction operations.

All costs of maintenance work during construction and before the project is accepted shall be included in the unit prices bid on the various contract items, and the Contractor will not be paid an additional amount for such work.

105-16 FAILURE TO MAINTAIN THE WORK:
Should the Contractor at any time fail to maintain the work as provided in the subsection titled MAINTENANCE DURING CONSTRUCTION of Section 105-15, the Owner shall immediately notify the Contractor of such noncompliance. Such notification shall specify a reasonable time within which the Contractor shall be required to remedy such unsatisfactory maintenance conditions. The time specified will give due consideration to the emergency that exists.

Should the Contractor fail to respond to the Owner’s notification, the Owner may suspend any work necessary for the Owner to correct such unsatisfactory maintenance condition, depending on the emergency that exists. Any maintenance cost incurred by the Owner shall be deducted from monies due or to become due the Contractor.

105-17 BLANK

105-18 OPENING SECTIONS OF THE WORK TO TRAFFIC:

Should it be necessary for the Contractor to complete portions of the contract work for the beneficial occupancy of the Owner prior to completion of the entire contract, such "phasing" of the work shall be specified herein and indicated on the plans. When so specified, the Contractor shall complete such portions of the work on or before the date specified or as otherwise specified. The Contractor shall make his own estimate of the difficulties involved in arranging his work to permit such beneficial occupancy by the Owner as described below:

Upon completion of any portion of the work listed above, with certification of the work by the Contractor's Engineer, such portion shall be accepted by the Owner in accordance with the subsection titled PARTIAL ACCEPTANCE of Section 105-20(A).

No portion of the work may be opened by the Contractor for public use until ordered by the Owner's Engineer in writing. Should it become necessary to open a portion of the work to public traffic on a temporary or intermittent basis, such openings shall be made when, in the opinion of the Owner's Engineer, such portion of the work is in an acceptable condition to support the intended traffic. Temporary or intermittent openings are considered to be inherent in the work and shall not constitute either acceptance of the portion of the work so opened or a waiver of any provision of the contract. Any damage to the portion of the work so opened that is not attributable to traffic which is permitted by the Owner shall be repaired by the Contractor at his expense.

The Contractor shall make his own estimate of the inherent difficulties involved in completing the work under the conditions herein described and shall not claim any added compensation by reason of delay or increased cost due to opening a portion of the contract work.

105-19 BLANK

105-20 ACCEPTANCE:

(A) PARTIAL ACCEPTANCE:

If at any time during the prosecution of the project the Contractor substantially completes a usable unit or portion of the work, the occupancy of which will benefit the Owner, he may request the Owner to make final inspection of that unit. If the Owner finds upon inspection that the unit has been satisfactorily completed in compliance with the contract, and certified to be in compliance by the Contractor's Engineer, he may accept it as being completed, and the Contractor may be relieved of further responsibility for that unit, subject to stated guarantees. Such partial acceptance and beneficial occupancy by the Owner shall not void or alter any provision of the contract.

(B) FINAL ACCEPTANCE:

Upon due notice from the Contractor of presumptive completion of the entire project, and certification of completion and compliance to the approved plans by the Contractor's Engineer, the Owner will make an inspection. If all construction provided for and contemplated by the contract is found to be completed in accordance with the contract, plans, and specifications, such inspection shall constitute the final inspection. The Owner shall notify the Contractor in writing of final acceptance as of the date of the final inspection.

If, however, the inspection discloses any work, in whole or in part, as being unsatisfactory, the Owner will give the Contractor the necessary instructions for correction of same, and the Contractor shall immediately comply with and execute such instructions. Upon correction of the work, and recertification by the Contractor's Engineer, another inspection will be made which shall constitute the final inspection, provided the work has been satisfactorily completed. In such event, the Owner will make the final acceptance and notify the Contractor in writing of this acceptance as of the date of final inspection.

105-GC2 NEGOTIATIONS:
It is the intent of the County to award a Contract to the lowest responsible Bidder provided the Bid has been submitted in accordance with the requirements of the Bid Documents, is judged reasonable, and does not exceed the funds available.

(a) The County shall have the authority to negotiate with the lowest bidder to reduce the scope of the Project in the event that all responsive bids exceed the Project budget.

Bids shall be made available for public inspection by appointment only after the award has been made by the Board of Supervisors. The Board of Supervisors has the sole authority to award bids and any statement by any employee of the County is not binding on the Board.

The following criteria will be considered a part of the evaluation process:

(a) Competence and responsibility of Bidder.
(b) Qualifications and experience of Bidder.
(c) Past performance of Bidder.
(d) Conformity with bidding requirements and general considerations.
(e) Record of timely completion of punch lists on past projects.

Negotiations With Individual Contractors: Gila County Public Works Division shall establish procedures and schedules for conducting Negotiations. Disclosure of one (1) Contractor's Price or any information derived from competing Bid Prices or any information derived from competing Bids is prohibited.

(a) Any response to a request for clarification of a bid shall be in writing.
(b) The Public Works Division shall keep a record of all negotiations.

For the purpose of conducting Negotiations with Contractors, Gila County may use any of the following methods that, in their judgment, best meets the unique requirements.

(a) Concurrent Negotiations: Negotiations may be conducted concurrently with responsible Contractors for the purpose of determining source selection and/or Contract Award.
(b) Exclusive Negotiations: A determination may be made by the Public Works Director to enter into exclusive negotiations with the responsible Contractor whose bid is determined in the selection process to be the most Advantageous to Gila County.

Exclusive Negotiations may be conducted subsequent to concurrent Negotiations or may be conducted without requiring previous concurrent Negotiations.

(a) A determination to conduct exclusive Negotiations shall not constitute a Contract Award nor shall it confer any property rights to the successful bidder.

If exclusive Negotiations are conducted and an agreement is not reached, the County may enter into exclusive Negotiations with the next highest ranked Contractor without the need to repeat the formal Solicitation process.

105-21 CLAIMS FOR ADJUSTMENT AND DISPUTES:

If for any reason the Contractor deems that additional compensation is due him for work or materials not clearly provided for in the contract, plans, or specifications or previously authorized as extra work, he shall notify the Owner in writing of his intention to claim such additional compensation before he begins the work on which he bases the claim. If such notification is not given or the Owner is not afforded proper opportunity by the Contractor for keeping strict account of actual cost as required, then the Contractor hereby agrees to waive any claim for such additional compensation. Such notice by the Contractor and the fact that the Owner has kept account of the cost of the work shall not in any way be construed as proving or substantiating the validity of the claim. When the work on which the claim for additional compensation is based has been completed, the Contractor shall, within 10 calendar days, submit his written claim, along with certification by the Contractor's Engineer, to the Owner for consideration in accordance with local laws or ordinances.

Nothing in this subsection shall be construed as a waiver of the Contractor's right to dispute final payment based on differences in measurements or computations.

SECTION 106 CONTROL OF MATERIAL

Per Section 106 of the ADOT Standard Specifications unless modified herein.

106.04(A) General: the fourth and fifth paragraphs of the Standard Specifications are revised to read:
The sampling, testing, and acceptance of materials shall be in accordance with the requirements of the specifications, in conjunction with the following:

- The ADOT Materials Testing Manual.
- The ADOT Materials Policy and Procedure Directives Manual.
- Applicable Federal, AASHTO, or ASTM specifications or test designations.
- Applicable specifications or test designations of other nationally recognized organizations.

Unless otherwise specified, whenever a reference is made to an Arizona Test Method or an ADOT Materials Policy and Procedure Directive, it shall mean the test method or policy and procedure directive in effect on the bid opening date.

106.04(C)(2) Quality Control Laboratory: the first paragraph is revised to read:
All field and laboratory sampling and testing shall be performed by a laboratory or laboratories approved by the Department. The requirements for approval of laboratories are specified in ADOT Materials Policy and Procedure Directive No. 19, "ADOT System for the Evaluation of Testing Laboratories". Approved laboratories, and the test methods for which they are approved to perform, are listed in the "ADOT Directory of Approved Materials Testing Laboratories". Approved test methods listed in the "ADOT Directory of Approved Materials Testing Laboratories" do not include field sampling and testing procedures. When field sampling and testing procedures are performed, the appropriate valid Arizona Technical Testing Institute (ATTI) and/or American Concrete Institute (ACI) certification(s) are required. ADOT Materials Policy and Procedure Directive No. 19, "ADOT System for the Evaluation of Testing Laboratories" and the "ADOT Directory of Approved Materials Testing Laboratories" may be obtained on the internet from the ADOT Materials Quality Assurance Section website.

106.04(C)(6) Weekly Quality Control Reports: of the Standard Specifications is revised to read:
The contractor shall submit Weekly Quality Control Reports to the Engineer. The weekly reports shall be complete and accurate, and shall state the types of work which have been performed during the report period. The report shall also include the process control measures taken to assure quality. The report shall provide sample identification information for materials tested during the report period, including sample number, date sampled, sample location, first and last name of person obtaining sample, and original source of material. The report shall also provide the results for all required tests and any retests, corrective actions, and other information relevant to quality control. The report shall include daily diaries for each day of testing, a weekly summary, the contract number, and the testing laboratory's project identification number.

Except as stated in the following paragraph, the weekly quality control report shall be prepared using standard forms provided by the Department. The standard forms are available on the Department's website at www.azdot.gov. After accessing the Department's website, select "Business", "Engineering and Construction", "Construction", "Contractors' Information", "Forms and Documents", and then "Weekly Quality Control Forms". Except for the daily diaries, all

documentation and information required on the forms shall be typed. Daily diaries may be hand-written if acceptable to the Engineer. The weekly report shall be submitted to the Engineer in paper form with a transmittal letter signed by the contractor's quality control manager.

In lieu of using the standard weekly quality control forms available on the Department's website, the contractor or testing laboratory may prepare the weekly report using proprietary or other software, if acceptable to the Engineer, provided that all required information is included, the format is comparable to the Department's standard format, and the report is submitted in paper form with the required transmittal letter.

The report period shall end at midnight of each Friday, and the report shall be submitted to the Engineer no later than 5:00 p.m. of the following Wednesday. The Engineer will verify that the report is timely, complete and accurate.

Reports that are not submitted by the above-referenced deadline shall be considered delinquent. Reports that are submitted by the above-referenced deadline, but are not complete and accurate, shall also be considered delinquent. In either case monies shall be deducted from the contractor's monthly estimate in accordance with the requirements for Contractor Quality Control, as specified in these special provisions.

106.05 Certificates: of the Standard Specifications is revised to read:

(A) General:

The contractor shall submit to the Engineer an original or copy of either a Certificate of Compliance or a Certificate of Analysis, as required, prior to the use of any materials or manufactured assemblies for which the specifications require that such a certificate be furnished.

Certificates shall be specifically identified as either a "Certificate of Compliance" or a "Certificate of Analysis".

The Engineer may permit the use of certain materials or manufactured assemblies prior to, or without, sampling and testing if accompanied by a Certificate of Compliance or Certificate of Analysis, as herein specified. Materials or manufactured assemblies for which a certificate is furnished may be sampled and tested at any time, and, if found not in conformity with the requirements of the plans and the specifications, will be subject to rejection, whether in place or not.

Certificates of Compliance and Certificates of Analysis shall comply with the requirements specified herein, the ADOT Materials Testing Manual, and applicable ADOT Materials Policy and Procedure Directives.

(B) Certificate of Compliance:

A Certificate of Compliance shall be submitted on the manufacturer's or supplier's official letterhead, and shall contain the following information:

(1) The current name, address, and phone number of the manufacturer or supplier of the material.
(2) A description of the material supplied.
(3) Quantity of material represented by the certificate.
(4) Means of material identification, such as label, lot number, or marking.

(5) A statement that the material complies in all respects with the requirements of the cited specifications. Certificates shall state compliance with the cited specification, such as AASHTO M 320, ASTM C 494; or specific table or subsection of the Arizona Department of Transportation Standard Specifications or Special Provisions. Certificates may cite both, if applicable.
(6) A statement that the individual identified in item seven below has the legal authority to bind the manufacturer or the supplier of the material.
(7) The name, title, and signature of the responsible individual. The date of the signature shall also be given.

Each of the first six items specified above shall be completed prior to the signing of the certificate as defined in item seven. No certificate will be accepted that has been altered, added to, or changed in any way after the authorized signature has been affixed to the original certificate. However, notations of a clarifying nature, such as project number, contractor, or quantity shipped are acceptable, provided the basic requirements of the certificate are not affected.

A copy or facsimile reproduction of the original certificate will be acceptable; however, the original certificate shall be made available upon request.

(C) Certificate of Analysis:
A Certificate of Analysis shall include all the information required for a Certificate of Compliance and, in addition, shall include the results of all tests required by the specifications.

106.15 BLANK

SECTION 107 LEGAL RELATIONS AND RESPONSIBILITY TO PUBLIC

107-01 LAWS TO BE OBSERVED:
The Contractor shall keep fully informed of all Federal and State laws, all local laws, ordinances, and regulations and all orders and decrees of bodies or tribunals having any jurisdiction or authority, which in any manner affect those engaged or employed on the work, or which in any way affect the conduct of the work. He shall at all times observe and comply with all such laws, ordinances, regulations, orders, and decrees; and shall protect and indemnify the Owner and all his officers, agents, or servants against any claim or liability arising from or based on the violation of any such law, ordinance, regulation, order, or decree, whether by himself or his employees.

Laws and Ordinances: This agreement shall be enforced under the laws of the State of Arizona and Gila County. The Contractor shall maintain in current status all Federal, State and Local licenses and permits required for the operation of the business conducted by the Contractor. The Contractor shall comply with the applicable provisions of the Americans with Disabilities Act (Public Law 101-336, 42 U.S.C. 12101-12213) and applicable federal regulations under the Act.

107-02 PERMITS, LICENSES, AND TAXES: Per Section 107.02 of the ADOT Standard Specifications unless modified herein.

107-03 PATENTED DEVICES, MATERIALS, AND PROCESSES: Per Section 107.03 of the ADOT Standard Specifications unless modified herein.

107-04 THRU 107-06 BLANK

107-07 SANITARY, HEALTH, AND SAFETY PROVISIONS:

The Contractor shall provide and maintain in a neat, sanitary condition such accommodations for the use of his employees as required to comply with the requirements of the State and local boards of health, or of other bodies or tribunals having jurisdiction. Contractor is responsible for supplying toilet and hand washing facilities at the work site.

Attention is directed to Federal, State and local laws, rules and regulations concerning construction safety and health standards. The Contractor shall not require any worker to work in surroundings or under conditions which are unsanitary, hazardous, or dangerous to his health or safety as determined under the Arizona Occupational Safety and Health Standards for Construction, adopted by the Industrial Commission of Arizona pursuant to the Authority in A.R.S. §23-410.

Before the Contractor or any subcontractor begins work on the project they must read the Gila County Public Works Division Safety & Loss Control booklet and sign an acknowledgement form.

Contractor Safety Tailgate Meetings: Contractor shall conduct tailgate safety meetings regularly to ensure that safety on the job is given priority.

Accident/Injury Procedure: Contractor shall contact the Owner and the Gila County Risk Management Division within twenty-four (24) hours of the occurrence of an accident or injury arising out of the Contractor's work under this contract.

Unsafe Acts: Contractor employees are encouraged to abate or remedy any unsafe act or condition which may arise in the course of Contractor's work under this contract.

Safety Audits: The County reserves the right to conduct safety audits at the job site and stop unsafe acts at any time. In addition, the County shall be notified should any OSHA inspection occur at a County job site.

107-08 PUBLIC CONVENIENCE AND SAFETY:

The Contractor shall control his operations and those of his subcontractors and all suppliers, to assure the least inconvenience to the traveling public. Under all circumstances, safety shall be the most important consideration.

All work shall be performed in compliance with Federal OSHA Standards.

The Contractor shall maintain the free and unobstructed movement of vehicular traffic with respect to his own operations and those of his subcontractor and all suppliers in accordance with the subsection titled MAINTENANCE OF TRAFFIC of Section 104-04 hereinbefore specified.

107-09 BARRICADES, WARNING SIGNS AND HAZARD MARKINGS:

The Contractor shall furnish, erect and maintain all barricades, warning signs, and markings for hazards necessary to protect the public and the work. When used during periods of darkness, such barricades, warning signs and hazard markings shall be suitably illuminated.

For vehicular and pedestrian traffic, the Contractor shall furnish, erect, and maintain barricades, warning signs, lights and other traffic control devices in reasonable conformity with the MUTCD.

The Contractor shall furnish and erect all barricades, warning signs and markings for hazards prior to commencing work which required such erection and shall maintain the barricades, warning signs, and markings for hazards until their dismantling is directed by the Owner's Engineer.

107-10 BLANK

107-11 PROTECTION AND RESTORATION OF PROPERTY AND LANDSCAPE: Per Section 107.11 of the ADOT Standard Specifications unless modified herein.

107-12 BLANK

107-13 RESPONSIBILITY FOR DAMAGE CLAIMS:
To the fullest extent permitted by law, Contractor shall defend, indemnify and hold harmless Gila County and their respective agents, representatives, officers, directors, officials, and employees from and against any and all demands, proceedings, suits, actions, claims, damages, or losses relating to, arising out of, resulting from or alleged to have resulted from the performance of the Work. Contractor's duty to defend, indemnify and hold harmless the indemnitee and their respective agents, representatives, officers, directors, officials and employees shall arise in connection with any and all demands, proceedings, suits, actions, claims, workers compensation claims, unemployment claims, damages, losses or expenses (including but not limited to attorney's fees, court costs and the cost of appellate proceedings) that are attributable to personal or bodily injury, sickness, disease, death, or injury to, impairment or destruction of property including the loss of use resulting thereon, caused by any act or omission of the Contractor, a subcontractor, anyone directly or indirectly employed by them or for whose acts they may be liable. The amount and type of insurance coverage requirements set forth in the Contract shall in no way be construed as limiting the scope of this indemnity.

107-14 CONTRACTOR'S INSURANCE:
Within ten (10) days of the execution of the contract, the Contractor shall file with the Gila County Procurement Department a certificate or certificates of insurance executed by an insurance company doing business in the State of Arizona and acceptable to the Owner's Engineer. The certificate of insurance shall state that, with respect to the contract awarded the Contractor; the Contractor carries insurance in accordance with the requirements of the Contract listed on pages 142 through 144.

On all policies Gila County shall be named as an additional insured.

107-15 CONTRACTOR'S RESPONSIBILITY FOR UTILITY PROPERTY AND SERVICES:

(A) General:

The contractor's attention is directed to the requirements of Arizona Revised Statutes Section 40-360.21 through .29 requiring all parties excavating in public streets, alleys or utility easements to first secure the location of all underground facilities in the vicinity of the excavation.

The contractor shall contact the owners of the various utilities prior to the start of construction and shall obtain from them any information pertaining to existing utilities that will either supplement information shown on the project plans or will correct any such information that may be incorrect. The contractor shall furnish the Engineer with evidence that the contractor has contacted the utility companies. Such evidence shall be submitted at the preconstruction conference, and shall include a copy of the information received from each utility as a result of such contacts.

If the contractor learns from either the owner of the utility or from any other source of the existence and location of properties of railway, telegraph, telephone, fiber optics cable, water, sewer, septic tanks or systems, electric, gas and cable television companies either omitted from or shown incorrectly on the project plans, the contractor shall immediately notify the Engineer and shall not disturb the utilities. Relocation or adjustment of such utilities, if deemed necessary, will be either performed by others or shall be performed by the contractor in accordance with the provisions of Subsection 104-02(C).

The contractor shall cooperate with the owners of any underground or overhead utility lines in their removal and rearrangement operations in order that these operations may progress in a reasonable manner, that duplication of rearrangement work may be reduced to a minimum and that services rendered by these parties will not be unnecessarily interrupted.

Temporary or permanent relocation or adjustment of any utility line or service connection desired by the contractor for its convenience shall be its responsibility. The contractor shall obtain the approval of both the Engineer and the utility company and upon approval shall make all necessary arrangements with the utility company and shall bear all costs in connection with such relocation or adjustment. The contractor shall also submit a Sewer Discharge Prevention Plan, as specified in Subsection 107-15(C)(1), describing each anticipated relocation or adjustment involving existing sanitary sewer lines. No work on a particular facility shall begin until all approvals for that facility have been received.

(B) Contractor Qualifications for Water and Sewer Lines:

Breakage of active sanitary sewer lines may result in the potential spread of disease, contamination of the site and any adjacent bodies of water, and other hazards to the public. Substantial cleanup costs may be associated with such breakage, as well as possible major civil and/or criminal penalties. Therefore, the Engineer will closely consider the qualifications of any personnel proposed by the contractor to oversee or perform work involving active sanitary sewer lines. The contractor shall not assume that the personnel assigned to perform such work will be acceptable to the Department merely because they meet the experience requirements listed herein.

The contractor, or the subcontracting firm assigned to perform the water and sewer work, shall have a minimum of five years of experience in the installation and construction of underground large diameter (18-inch or above) water and sewer improvements.

In addition, the key personnel assigned by the contractor to perform any work on water or sewer lines, whether from the prime contractor or a subcontracting firm, shall also have at least five years of experience in the installation and construction of underground large diameter (18-inch or above) water and sewer improvements. A minimum of two such people shall be designated by the contractor. The designated personnel may have the title of foreman or superintendent; however, at least one of these people shall be present at all times at the location of any work being performed at or near an active sanitary sewer line.

For both the firm and the key personnel, the experience shall include working with and around water and sewer utility lines that are in service. The contractor shall submit the following documentation to the Engineer for review and approval:

(1) A list indicating that the designated key project personnel have at least five years of applicable experience, as specified above. The list shall be accompanied with resumes for each of the key people. The resumes shall include the following information, and demonstrate compliance with the specified requirements:

(a) Detailed relevant experience for a minimum of two projects, including project description, date of work, actual work performed by the individual, and references (a minimum of one for each project).

(b) Level of applicable formal training.

(c) Number of years of relevant experience in performing like construction.

(2) A list of water and sewer construction projects completed by the firm performing the water or sewer work, as specified above, indicating a minimum of five years of applicable experience. Include the dates of work, type of work, description of the project, amount of work performed by the contractor/subcontractor, and the name and phone number of a contact with the owning company or agency for which the work was completed.

(3) List of equipment that will be used for this project. The list shall include, as a minimum, equipment type, date of manufacture, and if contractor-owned or rented.

(4) A list of all violations and citations in the past five years of applicable water and wastewater laws and statutes for both the prime contractor and the subcontractor responsible for the utility work.

The contractor shall submit this documentation to the Engineer for approval at least 21 calendar days prior to any anticipated work involving active sanitary sewer lines, whether new or existing.

(C) Protection of Existing Utility Lines:

At points where the contractor's operations are adjacent to right-of-way properties or easements for railway, telegraph, telephone, water, sewer, electric, gas and cable television companies, hereinafter referred to as utilities, or are adjacent to other facilities and property, damage to which might result in considerable expense, loss, inconvenience, injury or death, work shall not be commenced until all arrangements necessary for the protection thereof have been made.

The exact locations and depths of all utilities that are underground or the location of those on or near the surface of the ground which are not readily visible shall be determined. Such locations

shall be marked in such a manner so that all workmen or equipment operators will be thoroughly apprised of their existence and location. It will be the contractor's responsibility to see that every effort possible has been made to acquaint those actually involved in working near utilities not only with the type, size, location and depth, but with the consequences that might follow any disturbance. No trenching or similar operation shall be commenced until the Engineer is satisfied that every possible effort has been taken by the contractor to protect utilities.

The contractor shall coordinate with others working near new or existing sewer lines or other utilities on the procedures to be followed to prevent damaging of these utilities.

(1) Sewage Discharge Prevention Plan (SDPP):
For any work which may impact active sanitary sewer pipes, whether new or existing, the contractor shall prepare a Sewage Discharge Prevention Plan (SDPP) which shall describe the contractor's procedures and work plan for such lines. The Sewage Discharge Prevention Plan shall also describe the precautions that the contractor shall take to prevent unplanned breakage or spills, and the procedure which the contractor shall follow if breakage or a spill occurs.

The contractor's method of work described in the SDPP shall ensure that any work done in or near any active sewer line is performed in a safe and controlled manner resulting in no accidental discharges. As a minimum, the contractor's equipment and procedures shall be appropriate for the intended work, and shall conform to standard industry practices.

The SDPP shall include information, as specified below, for all portions of the project which involve the following work activities, and for any other element of work which may involve contact with an active sanitary sewer line:

- Interrupt, divert, relocate, plug, or abandon a sewer line or service connection, or
- Brace, or tie into a sewer line or service connection.

Construction activities in the vicinity of active sanitary sewer lines or service connections shall also be included in the SDPP if any of the following conditions exist:

(1) Any work crossing beneath the pipe, at any angle, regardless of vertical separation.

(2) Any work crossing over the pipe, at any angle, within two feet of the top of pipe.

(3) Work located parallel to the pipe within the following areas:

(a) For the area from the bottom of the pipe to two feet above the top of the pipe, any work within two feet horizontally of the pipe wall.

(b) For the area below the bottom of the pipe, any work located below an imaginary line beginning at the pipe spring line and progressing downward at a slope of 1.5 feet vertically to 1.0 feet horizontally.

The contractor’s Sewage Discharge Prevention Plan shall address each of the items tabulated below, as applicable, for every location where construction activity will involve an active sanitary sewer line.

(2) Required Elements of the Sewage Discharge Prevention Plan:
The following elements shall be addressed in the SDPP:

(a) Describe the proposed work in general, including the reasons for the work, scope, objectives, locations, dates, and estimated times the work will be conducted. Include project plan sheets detailing the proposed work, and indicating the peak flowrates of active sewer lines, determined as specified.

(b) For all existing sanitary sewer pipes, determine whether the lines are active or abandoned, and the peak flowrates of lines in service, as provided by the owner of the utility.

(c) List the key personnel (crew foreman, superintendent, and manager) and field office that are proposed to perform the work (include phone numbers).

(d) Describe the work in step-by-step detail for each location, including excavation plans and how both the new and existing structures and utilities will be identified and protected.

(e) Provide a detailed listing of any hardware, fittings, pipe plugs, flex couplings, tools, and materials needed to accomplish the work, and note the status of these items (on-hand, to-be-fabricated, on-order with expected delivery date, etc.). Include any manufacturer's specifications or recommendations, especially for any pipe plugs, sewer line fittings, and patching materials.

(f) List all major equipment to be used to perform the work. Include in this item any pumps that will be used to perform the work and the rated capacity of the pumps at the anticipated suction head.

(g) List all equipment to be used in the event of an unplanned release and specify how the equipment will be used. The locations of standby pumps shall be specified in this item. The plan shall indicate that all standby equipment to be used in the event of an unplanned discharge can be delivered to the site and put into service within two hours of identification of any unplanned flow.

(h) List the safety equipment to be used, and describe any unique safety procedures. Cite the applicable OSHA standards covering the work.

(i) Describe any contingency plans the contractor will implement in the event of unplanned releases and/or damage to existing facilities. List all personnel and subcontractors that will be responsible for responding to unplanned releases or damaged lines. Provide qualifications for all such personnel and subcontractors, including education, formal training, and relevant experience.

(j) Describe how the public will be protected during the work, and include or cite any applicable traffic control plans.

(k) Describe the quality control procedures that will be used in the field.

(l) Discuss how temporary plugs or flow control devices will be secured, monitored, and removed.

The SDPP shall be in written form, and shall include any diagrams or sketches necessary for clarity. When possible, diagrams and sketches should be shown using the applicable project plan sheets.

The contractor shall modify the SDPP as necessary throughout the project to include any new or revised information relevant to the items listed above. The contractor shall resubmit the revised SDPP to the Engineer for approval in each case.

(3) Sewage Discharge Prevention Plan Approval:
The SDPP shall be submitted to the Engineer at least 21 calendar days before any work involving an active sewer line is to be done. The Engineer will review the plan, solicit comments from the owner/operator of the sewer line, and return the plan to the contractor within 14 calendar days from original submittal.

No work involving active sanitary sewer lines shall be done until a final SDPP meeting all the requirements specified in Subsection 107-15(C)(2) has been approved by the Engineer.

Approval of the contractor's Sewage Discharge Prevention Plans, personnel, or construction methods and operation shall not relieve the contractor from its responsibility to safely perform the work included in this contract, nor from its liability for damage resulting, either directly or indirectly, from its work performed under this contract.

(D) Service Connections:

(1) General:
In the event of interruption to water, sewer, or utility services as a result of accidental breakage or as a result of lines being exposed or unsupported, the contractor shall promptly notify the proper authority and shall cooperate with the said authority in the restoration of service. When service is interrupted, repair work shall be continuous until the service is restored. No work shall be undertaken around fire hydrants until provisions for continued service have been approved by the local fire authority.

(2) Unidentified Water and Sewer Connections:
The contractor shall protect unidentified, undamaged water or sewer service connections encountered during excavation. The contractor shall immediately notify the Engineer when an unidentified service connection is encountered.

The contractor shall immediately repair unidentified water or sewer service connections that are damaged during excavation. Any damaged service connections shall be reported to the Engineer, including all remedial actions taken.

(E) Repairing Damaged Lines:
When the operations of the contractor result in damage to any utility line or service connection, the location of which has been brought to the contractor's attention, the contractor shall assume full responsibility for such damage.

Should an unplanned breakage occur in an active sewer line as a result of the contractor's operations, the contractor shall immediately notify the Engineer, and begin repairs to halt any flows and restore normal service, in accordance with the procedures described in the approved Sewage Discharge Prevention Plan. The contractor shall also immediately notify the affected utility company and the appropriate regulatory agencies. The contractor shall be responsible for repairing the damaged pipe, restoring any interruptions in service, and cleaning up the affected areas within 24 hours of the beginning of the spill. Sewage discharge damage assessments, as specified in Subsection 107-15(F), will be charged to the contractor for any unplanned breakage which results in a discharge.

The contractor shall be responsible to repair any breakage, in accordance with requirements of the broken line's owner/operator, and clean up the site per applicable codes and regulations of the Environmental Protection Agency, OSHA, Arizona Department of Environmental Quality (ADEQ), and all other agencies' specifications, at no additional cost to the Department.

(F) Sewage Discharge Damage Assessments:
The Department will assess liquidated damages in accordance with the Table 1 below for each 24-hour period, or portion thereof, for each unplanned breakage that occurs in an active sanitary sewer line as a result of the contractor's operation. The rate of liquidated damages assessed is based on the type and quantity of effluent discharged as determined by the Engineer.

These liquidated damages do not relieve the contractor from any of its responsibilities under the contract, including any liquidated damages that may be assessed under Subsection 108.09 for late completion of the project.

Liquidated damages assessed by the Department will be independent of any penalties imposed by others.

The contractor acknowledges that Regulatory agencies may assess or impose civil or criminal penalties on the contractor resulting from sewer discharges.

The Department will not be responsible for any civil or criminal penalties, fines, damages, or other charges imposed on the contractor by any regulatory agency or court for sewage discharges that are a result, directly or indirectly, of the contractor’s work performed under this contract.

Table 1		
Liquidated Damages (each 24 hour period, or portion thereof)		
Volume of Discharge	Raw Sewage or Industrial Wastewater	Treated Effluent
Less than 10,000 gallons	$5,000.00	$1,000.00
10,000-99,999 gallons	$10,000.00	$2,000.00
100,000-1 million gallons	$25,000.00	$3,000.00
Greater than 1 million gallons	$40,000.00	$5,000.00

Liquidated damages shall be assessed for each 24 hour period, or portion thereof, until the contractor has completed all of the following tasks:

(A) Stopped the discharge.

(B) Repaired the damaged pipe.

(C) Restored normal service.

(D) Fully cleaned and disinfected the site to the satisfaction of the Engineer.

REDUCTION OF LIQUIDATED DAMAGES: Upon completion of tasks A, B, and C above, and prior to completion of Task D, the liquidated damages assessed for the current 24-hour period shall be at the rate shown in Table 1. However, for each subsequent 24-hour period, the assessment will be one half of the rate shown in Table 1.

Damages will continue at the reduced rate until the site has been fully cleaned and disinfected to the satisfaction of the Engineer.

As an example, the amounts assessed each 24-hour period for an unplanned discharge of 20,000 gallons of raw sewage, in which the contractor completes tasks A, B, and C within the second 24-hour period but does not complete full cleanup until the third 24-hour period, will be as follows:

First 24-hour period: $10,000.00

Second 24-hour period: $10,000.00

Third 24-hour period: $5,000.00

For this example, the total liquidated damage assessment will be $25,000.00 ($10,000 + $10,000 + $5,000).

107-16 PERSONAL LIABILITY OF PUBLIC OFFICIALS:

In carrying out any of the contractor provisions or in exercising any power or authority granted to him by this contract, there shall be no liability upon the Owner's Engineer, his authorized representatives, or any official of the Owner either personally or as an official of the Owner. It is understood that in such matters they act solely as agents and representatives of the Owner.

107-17 NO WAIVER OF LEGAL RIGHTS:

Upon completion of the work, the Owner will expeditiously make final inspection and notify the Contractor of final acceptance. Such final acceptance, however, shall not preclude or stop the Owner from correcting any measurement, estimate, or certificate made before or after completion of the work, nor shall the Owner be precluded or stopped from recovering from the Contractor or his surety, or both, such overpayment as may be sustained, or by failure on the part of the Contractor to fulfill his obligations under the contract. A waiver on the part of the Owner of any breach of any part of the contract shall not be held to be a waiver of any other or subsequent breach.

The Contractor, without prejudice to the terms of the contract, shall be liable to the Owner for latent defects, fraud, or such gross mistakes as may amount to fraud, or as regards the Owner's rights under any warranty or guaranty.

SECTION 108 PROSECUTION AND PROGRESS

108-01 SUBLETTING OF CONTRACT:

The Contractor shall not sublet, sell, transfer, assign or otherwise dispose of the contract or contracts or any portion thereof or of his right, title or interest therein without written consent of the Owner's Engineer. In case such consent is given, the Contractor will be permitted to sublet a portion thereof, but shall perform with his own organization work amounting to not less than 50 percent of the total contract amount, except that any items designated in the contract as "Specialty Items" may be performed by subcontract and the cost of any such specialty items so performed by subcontract may be deducted from the total cost before computing the amount of work required to be performed by the Contractor with his own organization. No subcontracts or transfer of contract shall release the Contractor of his liability under the contract and bond.

"His own organization" shall be construed to include only workmen employed and paid directly by the prime contractor and equipment owned or rented by him, with or without operators.

"Specialty Items" shall be construed to be limited to work that requires highly specialized knowledge, craftsmanship or equipment not ordinarily available in contracting organizations qualified to bid on the contract as a whole and in general are to be limited to minor components of the overall contract.

The contract amount upon which the 50 percent requirement is computed includes the cost of materials and manufactured products which are to be purchased or produced by the Contractor under the contract provisions.

Any items that have been selected as "Specialty Items" for the contract will be listed as such in the special provisions, bidding schedule, or elsewhere in the contract documents.

The Owner will not recognize any subcontractor on the work. The Contractor shall at all times when work is in progress be represented either in person, by a qualified superintendent, or by other designated, qualified representative who is duly authorized to receive and execute the orders of the Owner's Engineer.

Should the Contractor elect to assign his contract, said assignment shall be concurred in by the surety, shall be presented for the consideration and approval of the Owner, and shall be consummated only on the written approval of the Owner. In case of approval, the Contractor shall file copies of all subcontracts with the Owner's Engineer

108-02 NOTICE TO PROCEED:

The notice to proceed shall state the date on which it is expected the Contractor will begin the construction and from which date contract time will be charged. The Contractor shall begin the work to be performed under the contract within ten (10) calendar days of the date set by the Owner's Engineer in the written notice to proceed, but in any event, the Contractor shall notify the Owner's Engineer at least two (2) work days in advance of the time actual construction operations will begin.

108-03 PRECONSTRUCTION CONFERENCE:

The contractor shall meet with the Engineer for a preconstruction conference prior to commencing work. At the preconstruction conference, the contractor shall submit to the Owner a progress schedule for review and approval. The schedule shall show the order in which the contractor proposes to carry out the work, the dates on which the contractor will start the salient features of

the work and the contemplated dates for the completion of the said salient features. The schedule may be in a bar chart format or a critical path method format. No schedule activity shall be shorter than one day or longer than 15 working days. The schedule must show interrelationships among the activities, and the controlling items of work throughout the project shall be identified. If requested by the Engineer, the contractor shall furnish information needed to justify activity time durations. Such information shall include estimated manpower, equipment, unit quantities, and production rates. The schedule shall illustrate the completion of the work not later than the contract completion date.

The contractor shall furnish a list of the contractor's proposed subcontractors and major material suppliers.

The contractor shall submit a traffic control plan in accordance with Subsection 701-1 of the ADOT Standard Specifications. The contractor shall designate an employee who is competent and experienced in traffic control to implement and monitor the traffic control plan. The qualifications of the designated employee must be satisfactory to the Engineer.

The contractor shall submit a Safety Plan and designate a competent person as Safety Supervisor to be responsible for implementation of the Safety Plan.

Both plans must be satisfactory to the Engineer.

If approved by the Engineer, the contractor may designate one employee to be responsible for both the traffic control and safety plans.

The contractor shall also submit a program for erosion control and pollution prevention, as set forth in Subsection 104-09, on all projects involving clearing and grubbing, earthwork, or other construction, when such work is likely to create erosion or pollution problems.

If the contractor fails to provide the required submissions, the Engineer may order the preconstruction conference suspended until such time as they are furnished. Work shall not begin until the preconstruction conference has been concluded and the safety plan has been approved, unless authorized by the Engineer. The contractor shall not be entitled to additional compensation or an extension of contract time resulting from any delays due to such a suspension.

When the specifications require specific quality control measures for certain materials by referencing Subsection 106.04(C), the contractor shall designate a qualified employee as Quality Control Manager. The Quality Control Manager shall be responsible for the implementing and monitoring of the quality control requirements described in Subsection 106.04(C).

108-04 PROSECUTION AND PROGRESS:

The Contractor's progress schedule, when approved by the Owner's Engineer, may be used to establish major construction operations and to check on the progress of the work. The Contractor shall provide sufficient materials, equipment, and labor to guarantee the completion of the project in accordance with the plans and specifications within the time set forth in the proposal.

If the Contractor falls significantly behind the submitted schedule, the Contractor shall, upon the Owner's Engineer's request, submit a revised schedule for completion of the work within the contract time and modify his operations to provide such additional materials, equipment, and labor

necessary to meet the revised schedule. Should the prosecution of the work be discontinued for any reason, the Contractor shall notify the Owner's Engineer at least twenty-four (24) hours in advance of resuming operations.

The Contractor shall not commence any actual construction prior to the date on which the notice to proceed is issued by the Owner.

108-05 LIMITATION OF OPERATIONS: Per Section 108.05 of the ADOT Standard Specifications unless modified herein.

108-06 CHARACTER OF WORKERS: Per Section 108.06 of the ADOT Standard Specifications unless modified herein.

108-07 METHODS AND EQUIPMENT: Per Section 108.07 of the ADOT Standard Specifications unless modified herein.

108-GC1 TEMPORARY SUSPENSION OF THE WORK:
The Owner's Engineer shall have the authority to suspend the work wholly, or in part, for such period or periods as he may deem necessary, due to unsuitable weather, or such other conditions as are considered unfavorable for the prosecution of the work, or for such time as is necessary due to the failure on the part of the Contractor to carry out orders given or perform any or all provisions of the contract.

In the event that the Contractor is ordered by the Owner's Engineer, in writing, to suspend work for some unforeseen cause not otherwise provided for in the contract and over which the Contractor has no control, the Contractor may be reimbursed for actual money expended on the work during the period of shutdown. No allowance will be made for anticipated profits. The period of shutdown shall be computed from the effective date of the Owner's Engineer's order to suspend work to the effective date of the Owner's Engineer's order to resume the work. Claims for such compensation shall be filed with the Owner's Engineer within the time period stated in the Owner's Engineer's order to resume work. The Contractor shall submit with his claim information substantiating the amount shown on the claim. The Owner's Engineer will forward the Contractor's claim to the Owner for consideration in accordance with local laws or ordinances. No provision of this article shall be construed as entitling the Contractor to compensation for delays due to inclement weather, for suspensions made at the request of the Contractor, or for any other delay provided for in the contract, plans or specifications.

If it should become necessary to suspend work for an indefinite period, the Contractor shall store all materials in such manner that they will not become an obstruction nor become damaged in any way. He shall take every precaution to prevent damage or deterioration of the work performed and provide for normal drainage of the work. The Contractor shall erect temporary structures where necessary to provide for the continuous flow of traffic.

108-08 DETERMINATION AND EXTENSION OF CONTRACT TIME:
The number of calendar or working days allowed for completion of the work shall be stated in the proposal and contract and shall be known as the CONTRACT TIME.

Should the contract time require extension for reasons beyond the Contractor's control, it shall be adjusted as follows:

(a) CONTRACT TIME based on WORKING DAYS shall be calculated weekly by the Owner's Engineer. The Owner's Engineer will furnish the Contractor a copy of his weekly statement of the number of working days charged against the contract time during the week and the number of working days currently specified for completion of the contract (the original contract time plus the number of working days, if any, that have been included in approved CHANGE ORDERS or SUPPLEMENTAL AGREEMENTS covering EXTRA WORK (104-02(C)).

The Owner's Engineer shall base his weekly statement of contract time charged on the following considerations:

(1) No time shall be charged for days on which the Contractor is unable to proceed with the principal item of work under construction at the time for at least 6 hours with the normal work force employed on such principal item. Should the normal work force be on a double-shift, 12 hours shall be used. Should the normal work force be on a triple-shift, 18 hours shall apply. Conditions beyond the Contractor's control such as strikes, lockouts, unusual delays in transportation, temporary suspension of the principal items of work under construction or temporary suspension of the entire work which have been ordered by the Owner's Engineer for reasons not the fault of the Contractor, shall not be charged against the contract time.
(2) The Owner's Engineer will not make charges against the contract time prior to the effective date of the notice to proceed.
(3) The Owner's Engineer will begin charges against the contract time on the first working day after the effective date of the notice to proceed.
(4) The Owner's Engineer will not make charges against the contract time after the date of final acceptance as defined in the subsection titled FINAL ACCEPTANCE of Section 105-20(B).
(5) The Contractor will be allowed one week in which to file a written protest setting forth his objections to the Owner's Engineer's weekly statement. If no objection is filed within such specified time, the weekly statement shall be considered as acceptable to the Contractor.

The contract time (stated in the proposal) is based on the originally estimated quantities as described in the subsection titled INTERPRETATION OF ESTIMATED PROPOSAL QUANTITIES of Section 102-06.

Should the satisfactory completion of the contract require performance of work in greater quantities than those estimated in the proposal, the contract time shall be increased in the same proportion as the cost of the actually completed quantities bears to the cost of the originally estimated quantities in the proposal. Such increase in contract time shall not consider either the cost of work or the extension of contract time that has been covered by change order or supplemental agreement and shall be made at the time of final payment.

(b) CONTRACT TIME based on CALENDAR DAYS shall consist of the number of calendar days stated in the contract counting from the effective date of the notice to proceed and including all Saturdays, Sundays, holidays, and non-work days. All calendar days elapsing between the effective dates of the Owner's Engineer's orders to suspend and resume all work, due to causes not the fault of the Contractor, shall be excluded.

At the time of final payment, the contract time shall be increased in the same proportion as the final cost bears to the estimated cost in the proposal. Such increase in the contract time shall not consider either the cost of work or the extension of contract time that has been covered by a change order or supplemental agreement. Charges against the contract time will cease as of the date of final acceptance.

(c) When the contract time is a specified completion date, it shall be the date on which all contract work shall be substantially completed.

If the Contractor finds it impossible for reasons beyond his control to complete the work within the contract time as specified, or as extended in accordance with the provisions of this subsection, he may, at any time prior to the expiration of the contract time as extended, make a written request to the Owner's Engineer for an extension of time setting forth the reasons which he believes will justify the granting of his request. The Contractor's plea that insufficient time was specified is not a valid reason for extension of time. If the Owner's Engineer finds that the work was delayed because of conditions beyond the control and without the fault of the Contractor, he may extend the time for completion in such amount as the conditions justify. The extended time for completion shall then be in full force and effect, the same as though it were the original time for completion.

108-09 FAILURE TO COMPLETE ON TIME:

For each calendar day or working day, as specified in the contract, that any work remains uncompleted after the contract time (including all extensions and adjustments as provided in the subsection titled DETERMINATION AND EXTENSION OF CONTRACT TIME of Section 108-08 the sum specified in the contract and proposal as liquidated damages will be deducted from any money due or to become due the Contractor or his surety. Such deducted sums shall not be deducted as a penalty but shall be considered as liquidation of a reasonable portion of damages that will be incurred by the Owner should the Contractor fail to complete the work in the time provided in his contract.

Permitting the Contractor to continue and finish the work or any part of it after the time fixed for its completion, or after the date to which the time for completion may have been extended, will in no way operate as a waiver on the part of the Owner of any of its rights under the contract.

108-10 DEFAULT AND TERMINATION OF CONTRACT:

The Contractor shall be considered in default of his contract and such default will be considered as cause for the Owner to terminate the contract for any of the following reasons if the Contractor:

(a) Fails to begin the work under the contract within the time specified in the "Notice to Proceed (108-02)"; or
(b) Fails to perform the work or fails to provide sufficient workers, equipment or materials to assure completion of work in accordance with the terms of the contract; or

(c) Performs the work unsuitably or neglects or refuses to remove materials or to perform anew such work as may be rejected as unacceptable and unsuitable; or
(d) Discontinues the prosecution of the work; or
(e) Fails to resume work which has been discontinued within a reasonable time after notice to do so; or
(f) Becomes insolvent or is declared bankrupt, or commits any act of bankruptcy or insolvency; or
(g) Allows any final judgment to stand against him unsatisfied for a period of 10 days; or
(h) Makes an assignment for the benefit of creditors; or
(i) For any other cause whatsoever, fails to carry on the work in an acceptable manner.

Should the Owner's Engineer consider the Contractor in default of the contract for any reason hereinbefore, he shall immediately give written notice to the Contractor and the Contractor's surety as to the reasons for considering the Contractor in default and the Owner's intentions to terminate the contract.

If the Contractor or surety, within a period of 10 calendar days after such notice, does not proceed in accordance therewith, then the Owner will, upon written notification from the Owner's Engineer of the facts of such delay, neglect, or default and the Contractor's failure to comply with such notice, have full power and authority without violating the contract, to take the prosecution of the work out of the hands of the Contractor. The Owner may appropriate or use any or all materials and equipment that have been mobilized for use in the work and are acceptable and may enter into an agreement for the completion of said contract according to the terms and provisions thereof, or use such other methods as in the opinion of the Owner's Engineer will be required for the completion of said contract in an acceptable manner.

All costs and charges incurred by the Owner, together with the cost of completing the work under contract, will be deducted from any monies due or which may become due the Contractor. If such expense exceeds the sum which would have been payable under the contract, then the Contractor and the surety shall be liable and shall pay to the Owner the amount of such excess.

108-GC2 TERMINATION OF CONTRACT FOR NATIONAL EMERGENCIES:
The Owner shall terminate the contract or portion thereof by written notice when the Contractor is prevented from proceeding with the construction contract as a direct result of an Executive Order of the President with respect to the prosecution of war or in the interest of national defense.

When the contract, or any portion thereof, is terminated before completion of all items of work in the contract, payment will be made for the actual number of units or items of work completed at the contract price or as mutually agreed for items of work partially completed or not started. No claims or loss of anticipated profits shall be considered.

Reimbursement for organization of the work, and other overhead expenses, (when not otherwise included in the contract) and moving equipment and materials to and from the job will be considered, the intent being that an equitable settlement will be made with the Contractor.

Acceptable materials, obtained or ordered by the Contractor for the work and that are not incorporated in the work shall, at the option of the Contractor, be purchased from the Contractor at actual cost as shown by receipted bills and actual cost records at such points of delivery as may be designated by the Owner's Engineer.

Termination of the contract or a portion thereof shall neither relieve the Contractor of his responsibilities for the completed work nor shall it relieve his surety of its obligation for and concerning any just claim arising out of the work performed.

SECTION 109 MEASUREMENT AND PAYMENT

Measurement will be in place for the completed work, with no allowance for waste, and as may be more particularly described in the description of the various items set forth in the Standard Specifications and as shown on the plans.

No additional payments will be made for work related to any item unless specifically noted and called for in the Proposal. Payment will be made at the unit price or lump sum price bid in the Proposal.

In addition to the requirements set forth in the ADOT Standard Specifications, no measurement or direct payment will be made for the following work. The cost for such work shall be considered as included in the price of other contract items.

A. Removal and salvage items as called for on the plans, in the Standard Specifications, or these Special Provisions.
B. Removal, salvage and/or re-installation of existing fence lines.
C. Sampling, testing, certification, and other quality control actions.
D. Disposal of surplus, waste or non-salvageable materials.
E. Grading of drainage ditches and drainage excavation not called out on the plans.
F. Preparation and submittal of operation, traffic control, and storm water pollution prevention plans, whether specified herein or required by the other agencies.
G. Obtaining and maintaining any required environmental and/or other permits and licenses.

The quantities set forth in the Proposal are used for the purpose of determining the basis of the award of the Contract, and may be increased or decreased 10% or less by the Owner to conform to the requirements of the work as set forth on the plans, and the Contractor shall agree to perform the work on the basis of the prices bid for the items contained in the Proposal regardless of whether or not the items or units are decreased or increased.

The Owner’s Engineer shall have the right to order omitted from the Contract any minor item found unnecessary to the work without violating the Contract or Performance Bond, and without any compensation to the Contractor.

To ensure the Contractor's satisfactory performance of the Contract, progress payments shall be subject to retainage pursuant to A.R.S. §34-221 in the amount of 10% of the approved estimate of the Work performed in the preceding calendar month. When the Work is 50% complete, the retainage shall be reduced to 5% so long as the Contractor is making satisfactory progress. If the Owner determines in writing that the Contractor is not making satisfactory progress at any time, the 10% retainage may be reinstated. In lieu of retainage, the Contractor may post substitute security meeting the requirements of A.R.S. §34-221.

109-01 MEASUREMENT OF QUANTITIES: Per Section 109.01 of the ADOT Standard Specifications unless modified herein.

109-02 SCOPE OF PAYMENT:
The Contractor shall receive and accept compensation provided for in the contract as full payment for furnishing all materials, for performing all work under the contract in a complete and acceptable manner, and for all risk, loss, damage, or expense of whatever character arising out of the nature of the work or the prosecution thereof, subject to the provisions of the subsection titled NO WAIVER OF LEGAL RIGHTS of Section 107-17.

When the "basis of payment" subsection of a specification requires that the contract price (price bid) include compensation for certain work or material essential to the item, this same work or material will not also be measured for payment under any other contract item which may appear elsewhere in the contract, plans or specifications.

Periodic progress payments shall be in accordance with A.R.S. §34-221.

109-03 COMPENSATION FOR ALTERED QUANTITIES:
When the accepted quantities of work vary from the quantities in the proposal, the Contractor shall accept as payment in full, so far as contract items are concerned, payment at the original contract price for the accepted quantities of work actually completed and accepted. No allowance, except as provided for in the subsection titled ALTERATION OF WORK AND QUANTITIES of Section 104-02(A) will be made for any increased expense, loss of expected reimbursement, or loss of anticipated profits suffered or claimed by the Contractor which results directly from such alterations or indirectly from his unbalanced allocation of overhead and profit among the contract items, or from any other cause.

109-04 PAYMENT FOR EXTRA AND FORCE ACCOUNT WORK:
Extra work, performed in accordance with the subsection titled EXTRA WORK of Section 104-02(C), will be paid for at the contract prices or agreed prices specified in the change order or supplemental agreement authorizing the extra work requiring that it be done by force account, such force account shall be measured and paid for as follows:

(a) Labor. For all labor (skilled and unskilled) and foremen in direct charge of a specific force account item, the Contractor shall receive the rate of wage (or scale) for every hour that such labor or foreman is actually engaged in the specified force account work. Such wage (or scale) shall be agreed upon in writing before beginning the work.

The Contractor shall receive the actual costs paid to, or in behalf of, workers by reason of subsistence and travel allowances, health and welfare benefits, pension fund benefits or other benefits, when such amounts are required by collective bargaining agreement or other employment contract generally applicable to the classes of labor employed on the work. An amount equal to 15 percent of the sum of the above items will also be paid the Contractor.

(b) Insurance and Taxes. For property damage, liability and workmen's compensation insurance premiums, unemployment insurance contributions, and social security taxes on the force account work the Contractor shall receive the actual cost, to which cost (sum) 5 percent will be added. The Contractor shall furnish satisfactory evidence of the rate or rates paid for such insurance and taxes.

(c) Materials. For materials accepted by the Owner's Engineer and used, the Contractor shall receive the actual cost of such materials delivered on the work, including

transportation charges paid by him (exclusive of machinery rentals as hereinafter set forth), to which cost (sum) 15 percent will be added.

(d) Equipment. For any machinery or special equipment (other than small tools) including fuel and lubricants, plus transportation costs, the use of which has been authorized by the Owner's Engineer, the Contractor shall receive the rental rates in the current "Blue Book for Construction Equipment".

(e) Miscellaneous. No additional allowance will be made for general superintendence, the use of small tools, or other costs for which no specific allowance is herein provided.

(f) Comparison of Records. The Contractor and the Owner's Engineer shall compare records of the cost of force account work at the end of each day. Agreement shall be indicated by signature of the Contractor and Owner's Engineer or their duly authorized representatives.

(g) Statements. No payment will be made for work performed on a force account basis until the Contractor has furnished the Owner's Engineer with duplicate itemized statements of the cost of such force account work detailed as follows:

(1) Name, classification, date, daily hours, total hours, rate and extension for each laborer and foreman.
(2) Designation, dates, daily hours, total hours, rental rate and extension for each unit of machinery and equipment.
(3) Quantities of material, prices, and extensions.
(4) Transportation of materials.
(5) Cost of property damage, liability and workmen's compensation insurance premiums, unemployment insurance contribution and social security tax.

Statements shall be accompanied and supported by receipted invoice for all materials used and transportation charges. However, if materials used on the force account work are not specifically purchased for such work but are taken from the Contractor's stock, then in lieu of the invoices the Contractor shall furnish an affidavit certifying that such materials were taken from his stock, that the quantity claimed, was actually used, and that the price and transportation claimed represent the actual cost to the Contractor.

The additional payment, based on the percentages specified above, shall constitute full compensation for all items of expense not specifically provided for in the force account work. The total payment made as provided above shall constitute full compensation for such work.

109-05 PAYMENT FOR OMITTED ITEMS:

As specified in the subsection titled OMITTED ITEMS of Section 104-02(B), the Owner's Engineer shall have the right to omit from the work (order nonperformance) any contract item, except major contract items, in the best interest of the Owner.

Should the Owner's Engineer omit to order nonperformance of a contract item or portion of such item from the work, the Contractor shall accept payment in full at the contract prices for any work actually completed and acceptable prior to the Owner's Engineer's order to omit or non-perform such contract item.

Acceptable materials ordered by the contract or delivered on the work prior to the date of the Owner's Engineer's order will be paid for at the actual cost to the Contractor and shall thereupon become the property of the Owner.

In addition to the reimbursement hereinbefore provided, the Contractor shall be reimbursed for all actual costs incurred for the purpose of performing the omitted contract item prior to the date of the Owner's Engineer's order. Such additional costs incurred by the Contractor must be directly related to the deleted contract item and shall be supported by certified statements by the Contractor as to the nature and amount of such costs.

109-06 THRU 109-08 BLANK

109-09 ACCEPTANCE AND FINAL PAYMENT:

When the contract work has been accepted in accordance with the requirements of the subsection titled FINAL ACCEPTANCE of Section 105-20(B), the Owner's Engineer will prepare the final estimate of the items of work actually performed. The Contractor shall approve the Owner's Engineer's final estimate or advise the Owner's Engineer of his objections to the final estimate which are based on disputes in measurements or computations of the final quantities to be paid under the contract as amended by change order or supplemental agreement. The Contractor and Owner's Engineer shall resolve all disputes (if any) in the measurement and computation of final quantities to be paid within 30 calendar days of the Contractor's receipt of the Owner's Engineer's final estimate. If, after such 30-day period, a dispute still exists, the Contractor may approve the Owner's Engineer's estimate under protest of the quantities in dispute and such disputed quantities shall be considered by the Owner as a claim in accordance with the subsection titled CLAIMS FOR ADJUSTMENT AND DISPUTES of Section 105-21.

After the Contractor has approved, or approved under protest, the Owner's Engineer's final estimate, final payment will be processed based on the entire sum, or the undisputed sum in case of approval under protest, determined to be due the Contractor less all previous payments and all amounts to be deducted under the provisions of the contract. All prior partial estimates and payments shall be subject to correction in the final estimate and payment.

Contractor shall provide an executed Affidavit of Release of Liens and an Affidavit of Payment to the Owners Engineer prior to the release of the final payment.

If the Contractor has filed a claim for additional compensation under the provisions of the subsection titled CLAIMS FOR ADJUSTMENTS AND DISPUTES of Section 105-21 or under the provisions of this subsection, such claims will be considered by the Owner in accordance with local laws or ordinances. Upon final adjudication of such claims, any additional payment determined to be due the Contractor will be paid pursuant to a supplemental, final estimate.

SECTION 201 CLEARING AND GRUBBING

Clearing and grubbing shall be in accordance with the requirements of Section 201 of the ADOT Standard Specifcations and as modified herein.

201-3.02 **Removal and Disposal of Materials:** the second and third paragraphs of the ADOT Standard Specifications are revised to read:

In the disposal of all tree trunks, stumps, brush, limbs, roots, vegetation and other debris, the Contractor shall comply with the requirements of Title 49, Chapter 3, of the Arizona Revised Statutes, and with the Rules and Regulations for Air Pollution Control, Title 18, Chapter 2, Article 6, adopted by the Arizona Department of Environmental Quality pursuant to the authority granted by the Arizona Administrative Code.

Burning of trash, debris, plant material, wood, or any other waste materials will not be allowed.

SECTION 202 REMOVAL OF STRUCTURES AND OBSTRUCTIONS:

Removal of structures and obstructions shall be in accordance with the requirements of Section 202 of the ADOT Standard Specifcations and as modified herein.

202-5 **Basis of Payment:** the first paragraph of the ADOT Standard Specifications is revised to read:

Payment for the accepted quantities of removal of structures and obstructions will be made by lump sum or by specific removal items or by a combination of both. Payment for removal of structures and obstructions not listed in the bidding schedule, but necessary to perform the construction operations designated on the project plans or specified in the Special Provisions shall be considered as included in the prices of contract items.

When saw cutting is not included as a contract pay item, full compensation for any saw cutting necessary to perform the construction operations designated on the plans shall be considered as included in the price of contract items.

ITEM 2020057 REMOVE AND SALVAGE (GATE):

ITEM 2020058 REMOVE AND SALVAGE (FENCE):

Description:

The work under these items shall consist of removing and salvaging existing fences and gates within the project limits at the locations indicated on the Plans and as specified herein.

Construction Requirements:

Removing and salvaging of fences and gates shall be performed in accordance with the requirements of Subsection 202-3.01 of the ADOT Standard Specifications.

The Contractor shall remove the fences and gates carefully to avoid any damages to the fences and gates. Fence and gate components damaged by the Contractor during removal shall be

replaced by the Contractor at no additional cost to the Owner. Salvaged fence and gates shall be reused for construction at the locations indicated on the Plans and in these Special Provisions. Excess and broken fence and gate compoents shall become the property of the Contractor and disposed of off the project site.

Method of Measurement:

Removal and salvage of fence will be measured by the linear foot.

Removal and salvage of gates will be measured by the unit for each gate removed and salvaged.

Basis of Payment:

The accepted quantities of removal and salvage of fence, measured as provided above, will be paid for at the contract unit price per linear foot, which price shall be full compensation for the work, complete in place.

The accepted quantities of removal and salvage of gates, measured as provided above, will be paid for at the contract unit price per each, which price shall be full compensation for the work, complete in place.

ITEM 2020065 REMOVAL OF TREES (GREATER THAN 12" DIAMETER)
ITEM 2020115 REMOVE (TREE) (12" DIAMETER OR LESS)

Description:

The work under this item shall include removing and disposing of the existing trees as shown on the project plans, in accordance with the requirements of Section 201 of the ADOT Standard Specifications and these Special Provisions.

Construction Requirements:

All tree removal personnel shall have a minimum of one-year experience in large tree removal and be supervised at all times by a foreman with a minimum of two years' experience. Background information on all personal associated with this task, along with references that will verify experience, shall be submitted to the Engineer at the pre-construction meeting.

The Contractor shall cut trees flush with existing grades. All stumps shall be ground to a minimum of three feet below existing grade including the removal of all roots that are at that same elevation below existing grade.

Cavities resulting from the removal of stumps and roots shall be backfilled with material approved by the Engineer. The material shall be compacted to a density of not less than 95 percent of the maximum density as determined in accordance with the requirements of the applicable test methods of the ADOT Materials Testing Manual, as directed and approved by the Engineer.

The Contractor shall coordinate with the Engineer no less than two weeks prior to this work to tag all trees designated for removal.

Upon removal, trees shall become property of the Contractor.

Burning of the removed trees will not be permitted. All tree materials resulting from removal shall be removed from the jobsite during the same work day period. No debris larger than one square inch shall remain after the removal process is completed.

Method of Measurement:

Removal of Trees will be measured by the unit for each.

Basis of Payment:

The accepted quantities of Removal of Trees, measured as provided above, will be paid for at the contract unit price per each, which price shall be full compensation for the work, complete in place, including excavation and subsequent backfill, hauling, cutting, and disposing of the trees, and as shown on the project plans and specified herein.

SECTION 203 EARTHWORK

Earthwork shall be in accordance with the requirements of Section 203 of the ADOT Standard Specifcations and as modified herein.

203-5.03(B)(4) Compaction of Backfill: the first paragraph of the ADOT Standard Specifications is revised to read:

Each layer of structure backfill material shall be compacted to at least 100 percent of the maximum density as determined in accordance with the requirements of the applicable test methods of the ADOT Materials Testing Manual, as directed and approved by the Engineer.

203-5.03(C) Geocomposite Wall Drain: the first sentence of the first paragraph of the Standard Specifications is revised to read:

Geocomposite wall drains shall be installed on the soil side of abutment walls, retaining walls, and culvert wing walls. If shown on the plans, geocomposite wall drains shall also be installed on the soil side of culvert sidewalls.

203-6.01 Description: of the ADOT Standard Specifications is modified to add:

Hand work may be necessary at some locations where equipment is not practical to use.

The removal of all excess material that cannot be reshaped in the area specificied for grading shall become the property of the Contractor.

203-6.04 Method of Measurement: of the ADOT Standard Specifications is revised to read:

203-6.04 Blank

203-6.05 Basis of Payment: the title of the ADOT Standard Specifications is revised to read:

No measurement for payment will be made for grader ditch, the cost being considered as included in the cost of the contract bid item Grading Roadway for Pavement.

203-6.05 Blank

SECTION 205 GRADING ROADWAY FOR PAVEMENT

Grading roadway for pavement shall be in accordance with Section 205 of the ADOT Standard Specifications.

SECTION 207 DUST PALLIATIVE

207-1 Description:

The work under this section shall consist of applying all water required for the control of dust as considered necessary for the safety and convenience of the traveling public, and for the reduction of the dust nuisance to adjacent property.

207-2 Blank

207-3 Construction Requirements:

The use of pressure pumps and spray bars on all sprinkling equipment used for the application of dust palliative will be required. The use of gravity flow spray bars and splash plates will not be permitted.

Water applied for dust control shall be as approved or directed by the Engineer. The Contractor shall provide appropriate equipment for effective control of dust.

207-4 Method of Measurement and Basis of Payment:

No measurement will be made for application of dust palliative, including furnishing water and all necessary equipment and labor, the cost being considered as included in contract items.

SECTION 303 AGGREGATE SUBBASES AND AGGREGATE BASES

Aggregate Base Course shall be Class II in accordance with the requirements of Section 303 of the ADOT Standard Specifcations.

SECTION 403 ASPHALTIC CONCRETE HOT PLANT REQUIREMENTS

Asphaltic Concrete Hot Plant Requirements shall be in accordance with Section 403 of the ADOT Standard Specifications unless modified herein.

403-2 Requirements: the third paragraph of the ADOT Standard Specifications is revised to read:

The mineral admixture shall be added and thoroughly mixed with the mineral aggregate by means of a mechanical mixing device prior to the mineral aggregate and mineral admixture entering the dryer. For all asphaltic concrete mixes except ACFC (Specification Sections 407 and 411) and

AR-ACFC (Specification Section 414), the moisture content of the combined mineral aggregate shall be a minimum of 3 percent by weight of the aggregate during the mixing process. For ACFC and AR-ACFC mixes, the mineral aggregate shall be wet with free moisture on the surface of the aggregate just prior to the mixing process. To ensure that adequate mixing water is available on the surface of the aggregate, the Engineer may require that the mineral aggregate for ACFC and AR-ACFC mixes have a moisture content of up to 1-1/2 percent above the combined water absorption.

403-2 **Requirements:** the twelfth paragraph of the ADOT Standard Specifications is revised to read:

The Contractor shall provide daily documentation of the weight and proportion of each individual component (mineral aggregate, mineral admixture, and bituminous material) incorporated into the mix, within three business days of the production. When a dedicated plant is being used, plant startup waste shall be shown in the hot plant documentation. In addition, when reclaimed asphaltic pavement (RAP) is used, the Contractor shall provide daily documentation of the weight, determined by a calibrated or certified belt scale, and proportion of material from each individual RAP stockpile incorporated into the mix. The percent moisture content of the RAP material from each stockpile shall also be determined and provided daily by the Contractor.

When Warm Mix Asphalt (WMA) technologies are used, the Contractor shall provide the percent of water (for WMA water foaming processes) and/or the percent of WMA additive incorporated in the mix. The percent of each WMA technology shall be reported either by weight of total mix or by weight of total binder.

When incorporating WMA technologies, the hot plant shall be modified as required by the WMA technology manufacturer to introduce the WMA technology. Plant modifications may include additional plant instrumentation, the installation of asphalt binder foaming systems and/or WMA additive delivery systems, adjusting the plant burner and/or the mixing drum flights in order to operate at lower production temperatures, and/or reducing the production rate of WMA.

SECTION 404 BITUMINOUS TREATMENTS

Bituminous Treatments shall be in accordance with Section 404 of the ADOT Standard Specifications unless modified herein.

404-3.12 **Tack Coat:** of the Standard Specifications is revised to read:

Tack coat shall be applied prior to placing a bituminous mixture on a primed surface, an existing bituminous surface, or an existing Portland cement concrete pavement surface. Tack coat shall also be applied between layers of bituminous mixtures. A light coat of bituminous material shall also be applied to edges or vertical surfaces against which a bituminous mixture is to be placed.

The Contractor shall choose the bituminous material to be used for tack coat. The Engineer must approve the Contractor's choice of bituminous material prior to its use.

The bituminous material used for tack coat shall conform to the requirements of Section 1005.

The rate of application for the specific usage will be specified by the Engineer. The following table shows approximate tack coat application rates:

Type of Bituminous Material	Approximate Tack Coat Application Rates: Gallons / Square Yard		Payment Factor
	Prior to Placing ACFC or AR-ACFC	All Other Tack Coats	
Emulsified Asphalt (Special Type) – See Note Below.	Not Allowed	0.12	0.7
Emulsified Asphalt (Other than Special Type)	0.08	0.08	1.0
Asphalt Cement	0.06 to 0.08	0.06 to 0.08	1.0
Note: Emulsified Asphalt (Special Type) shall consist of Type SS-1 or CSS-1 emulsified asphalt diluted with water to provide an asphalt content of not less than 26 percent.			

If emulsified asphalt of any type is used, it shall have broken before the bituminous mixture is placed.

If emulsified asphalt of any type is held over night, it shall be reheated and agitated prior to further application.

The Engineer may either adjust the application rate or, except as specified below, eliminate the use of tack coat in any part of the work if, in the Engineer's judgment, the bituminous mixture to be placed will be effectively bonded to the underlying surface. For asphaltic concrete friction course, asphaltic concrete friction course (asphalt-rubber), or asphaltic concrete (asphalt-rubber), application of the tack coat immediately prior to placing such pavements shall not be eliminated, although the Engineer may adjust the application rate.

Tack coat shall be applied only as far in advance of the placement of the bituminous mixture as is necessary to obtain the proper condition of tackiness. In no event shall more tack coat be applied in one day than will be covered by the bituminous mixture during that same day.

SECTION 409 ASPHALTIC CONCRETE (MISCELLANEOUS STRUCTURAL)

Asphaltic Concrete Pavement shall be in accordance with Section 409 of the ADOT Standard Specifications except as modified herein.

A thickened asphalt edge will be required throughout the project and where new pavement matches existing pavement and shall be constructed per MAG Standard Detail 201, Type A (**See Appendix A**). The cost of constructing each thickened asphalt edge shall be considered included in the cost of Bidding Item No. 409.

409-1 **Description:** of the ADOT Standard Specifications is revised to read:

The work under this section shall consist of constructing Asphaltic Concrete (Miscellaneous Structural), hereinafter asphaltic concrete, by furnishing all materials, mixing at a plant, hauling and placing a mixture of aggregate materials, reclaimed asphalt pavement (RAP) if used, mineral admixture, and bituminous material (asphalt cement) to form a pavement course or to be used for other specified purposes, in accordance with the details shown on the project plans and the requirements of the specifications, and as directed by the Engineer.

The Contractor shall acquire and make all arrangements for a source or sources of material, furnish a mix design which will meet the design criteria specified hereinafter, and provide all the equipment, materials, and labor necessary to complete the work.

409-2 **Materials:** of the ADOT Standard Specifications is modified to add:

The bidding schedule quantity of asphaltic concrete is based on an estimated unit weight of 145 pounds per cubic foot.

409-2.01 **Mineral Aggregate:** "Carbonates" and "Note (1)" are added to the table following the first paragraph of the ADOT Standard Specifications:

Mineral Aggregate Characteristics	Test Method	Requirement
Carbonates (1)	Arizona Test Method 238	Maximum 20%
(1): Testing for carbonates only applies if either of the following conditions exist: (a) The asphaltic concrete is the designed final pavement surface normally used by traffic. (b) The asphaltic concrete, temporary or otherwise, will be subject to traffic for more than 60 days.		

409-2.01 **Mineral Aggregate:** the table following the second paragraph of the ADOT Standard Specifications is revised to read:

Mix Design Grading Limits						
Sieve Size	**Percent Passing**					
	Lift Thickness Less Than 1½ Inches		**Lift Thickness 1½ to 2 Inches**		**Lift Thickness Greater Than 2 Inches**	
	Without Admixture	**With Admixture**	**Without Admixture**	**With Admixture**	**Without Admixture**	**With Admixture**
1 Inch					100	100
3/4 Inch			100	100	90 – 100	90 – 100
1/2 Inch	100	100	90 – 100	90 – 100	---	---
3/8 Inch	90 – 100	90 – 100	70 – 85	70 – 85	70 – 85	70 – 85
No. 8	41 – 55	42 – 56	41 – 51	42 – 52	41 – 51	42 – 52
No. 40	9 – 19	10 – 20	---	---	---	---
No. 200	2.0 – 5.0	3.0 – 6.5	2.0 – 5.0	3.0 – 6.5	2.0 – 5.0	3.0 – 6.5

409-2.02 **Bituminous Material:** the first paragraph of the ADOT Standard Specifications is revised to read:

Asphalt cement shall be a performance grade (PG) asphalt binder, conforming to the requirements of Section 1005. **The type of asphalt binder shall be PG 64-28**.

409-2.03 **Mineral Admixture:** the last paragraph of the ADOT Standard Specifications is revised to read:

The certification and acceptance of Portland cement, blended hydraulic cement, and hydrated lime shall be in accordance with ADOT Materials Practice and Procedure Directive No. 13, "Certification and Acceptance of Hydraulic Cement, Fly Ash, Natural Pozzolan, Silica Fume, and Lime".

409-2.04 **Mix Design:** the third and fourth paragraphs of the ADOT Standard Specifications are revised to read:

The mix design shall be prepared by or under the direct supervision of a professional engineer experienced in the development of mix designs and mix design testing. Reclaimed asphalt pavement (RAP) may be used in the mixture if properly designed per Arizona Test Method 833; however, RAP will not be allowed in the mixture when asphalt cement type PG 76-22 TR+ or PG 70-22 TR+ is specified in Subsection 409-2.02. Limits for the usage of RAP shall be per ADOT Materials Practice and Procedure Directive No. 20, “Guidance on the Use of Reclaimed Asphalt Pavement (RAP) in Asphaltic Concrete”. The mix design engineer shall meet the requirements given in ADOT Materials Practice and Procedure Directive No. 4, “Asphaltic Concrete Mix Design Proposals and Submittals”. The mix design shall be provided in a format that clearly indicates all the mix design requirements and shall be sealed, signed, and dated by the mix design engineer.

The mix design shall be prepared by a mix design laboratory that has met the requirements of ADOT Materials Practice and Procedure Directive No. 19, “ADOT System for the Evaluation of Testing Laboratories”.

If approved by the Engineer, as an alternative to meeting the mix design requirements specified herein, a 1/2 inch or 3/4 inch mix design meeting the requirements of either Section 416 or Section 417 of the specifications may be substituted for use. The type of asphalt binder used in the alternative mix design must be the same as that specified in Subsection 409-2.02. The alternative mix design may include reclaimed asphalt pavement (RAP) if properly designed per Arizona Test Method 833. The lift thickness for the alternative mix design shall conform to the following table.

Alternative Mix Design	Minimum Lift Thickness
Section 416 (1/2 inch mix)	1-1/2 inches
Section 416 (3/4 inch mix)	2 inches
Section 417 (1/2 inch mix)	2 inches
Section 417 (3/4 inch mix)	2-1/2 inches

The Contractor may propose the use of a mix design that has been developed for a previous project. The proposed mix design shall meet the requirements of these specifications. The Contractor shall provide evidence that the type and source of bituminous material, the type of mineral admixture, and the source and methods of producing mineral aggregate, and RAP material if applicable, have not changed since the formulation of the previous mix design. The Contractor shall also provide current test results for all specified characteristics of the mineral aggregate, and RAP material if applicable, proposed for use. The Engineer will determine if the previously used mix design is suitable for the intended use and if the previous use of the mix design was satisfactory to the Department. The Engineer will either approve or disapprove the proposed mix design. Should the Engineer disapprove the use of the previously used mix design, the Contractor shall prepare and submit a new mix design proposal in accordance with the requirements of these specifications.

A previously used mix design older than two years from the date it was formulated, sealed, signed, and dated shall not be allowed for use. Once approved for use on a project, a previously used mix design may be used for the duration of that project.

409-2.04 **Mix Design:** the last two paragraphs of the ADOT Standard Specifications are revised to read:

The mix design shall meet the following criteria when tested in accordance with the requirements of the following test methods:

Criteria	Requirement	Arizona Test Method
1. Voids in Mineral Aggregate: %, Range	14.5 – 18.5	(See Note)
2. Effective Voids: %, Range	5.3 – 5.7	(See Note)
3. Absorbed Asphalt: %, Range	0 – 1.0	(See Note)
Note: For mixes without RAP, Arizona Test Method 815. For mixes with RAP, Arizona Test Method 833.		

The Engineer reserves the right to adjust the asphalt content during production from the mix design value without additional compensation to the Contractor in order to obtain desirable effective voids.

409-2.05 **Sampling and Testing:** of the ADOT Standard Specifications is revised to read:

Sampling and testing the materials and mixture for quality control purposes shall be the Contractor's responsibility. The Contractor shall perform sufficient testing to assure that mineral aggregate and asphaltic concrete are produced which meet all specified requirements. The Engineer reserves the right to sample and test the materials and mixture when necessary to determine that they reasonably conform to the requirements specified herein.

409-3.01 **General:** the ninth, tenth, eleventh, and twelfth paragraphs of the ADOT Standard Specifications are revised to read:

All wheels and tires of compactors shall be wetted with water, or if necessary soapy water, or a release agent in order to prevent the sticking of asphaltic concrete. All other equipment surfaces shall be treated when necessary with a release agent. Only release agents evaluated through NTPEP are acceptable for use. The results from NTPEP testing, when tested in accordance with AASHTO TP 102, shall meet the following criteria:

RELEASE AGENT TEST	REQUIREMENT
Asphalt Stripping Test Diluted Non-Diluted (Full Strength)	No Stripping No Stripping
Mixture Slide Test	10 g Retained, Max.
Asphalt Performance Test	Less than or equal to 10.0% after the third cycle

Release agents which degrade, dissolve, or in any way damage the bituminous material shall not be used. Diesel fuel shall not be used as a release agent.

Asphaltic concrete immediately behind the laydown machine shall be in a thoroughly mixed, free-flowing, and workable condition, be free of lumps and crusts, and have a minimum temperature of 275 degrees F.

All courses of asphaltic concrete shall be placed and finished by means of self-propelled paving machines except under certain conditions or at certain locations where the Engineer deems the use of self-propelled paving machines impractical.

The speed of the paving machine shall be coordinated with the production of the plant and an adequate number of trucks for hauling asphaltic concrete shall be available in order to achieve, as far as practical, a continuous operation.

Self-propelled paving machines shall spread the mixture within the specified tolerances, without segregation or tearing, true to the line, grade, and crown indicated on the project plans. Pavers shall be equipped with hoppers and augers which will distribute the mixture uniformly in front of adjustable screeds.

409-3.01 **General:** the seventeenth paragraph of the ADOT Standard Specifications is revised to read:

Before asphaltic concrete is placed, the surface to be paved shall be cleaned of all objectionable material and tacked with bituminous material in accordance with the requirements of Section 404.

409-5.02 **Reduction for Noncompliance:** of the ADOT Standard Specifications is revised to read:

A reduction in payment to the Contractor for asphaltic concrete will be made for quantities of asphalt cement (bituminous material) that do not meet the requirements of Section 1005 as determined by corresponding test results. Adjustments in payment will be made in accordance with the requirements of Table 1005-1 and the following formula:

$$R = (100 - P) \text{ x} \left[\frac{(CP) \text{ x } T}{100} \right]$$

Where:

R	=	Amount of Reduction in Payment (dollars)
T	=	Quantity of asphalt cement in failure (tons, rounded to nearest tenth)
P	=	Percent of Contract Unit Price allowed (Table 1005-1)
CP	=	Current Price for asphalt cement (bituminous material), as determined by the Department, for the month in which a deficiency was noted. This value will be posted on the ADOT Contracts and Specifications Section website, on or shortly after the last Wednesday of each month.

SECTION 601 CONCRETE STRUCTURES

Concrete Structures shall be in accordance with Section 601 of the ADOT Standard Specifications except as modified herein.

601-3.02 **Falsework and Forms:** of the ADOT Standard Specifications is revised to read:

601-3.02 Falsework and Forms:

(A) Design and Drawings:

The Contractor shall be responsible for designing and constructing safe and adequate falsework and forms which provide the necessary rigidity, support the loads imposed, and produce in the finished structure the lines, grades, and dimensions shown on the project plans and established by the Engineer.

The Contractor shall apply the best practice principles available from the current publications of AASHTO's Guide Design Specifications for Bridge Temporary Works and Construction Handbook for Bridge Temporary Works.

Forms shall be any system of structural elements which provide horizontal support or restraint to the lateral pressure of concrete.

Falsework shall be any system of structural elements that provide temporary lateral and vertical support for loads from plastic concrete, forms, reinforcing steel, structural steel, loads from placement operations or other related loads, and continues to provide support until the concrete has attained adequate strength and the structure is capable of self-support. Stay-in-place metal forms for cast-in-place concrete decks are also considered a falsework system.

The design load for falsework shall consist of the sum of dead and live vertical loads, and an assumed horizontal load. The minimum total design load for any falsework shall be not less than 100 pounds per square foot for the combined live and dead load, applied over the area supported, regardless of concrete slab thickness.

Dead loads shall include the weight of concrete, reinforcing steel, forms and falsework. The weight of concrete, reinforcing steel and forms shall be assumed to be not less than 160 pounds per cubic foot for normal concrete and not less than 130 pounds per cubic foot for lightweight concrete.

Live loads shall consist of the actual weight of any equipment to be supported by falsework applied as concentrated loads at the points of contact and a uniform load of not less than 50 pounds per square foot applied over the area supported.

The assumed horizontal load to be resisted by the falsework bracing system shall be the sum of the actual horizontal loads due to equipment, construction sequence or other causes and an allowance for wind, but in no case shall the assumed horizontal load to be resisted in any direction be less than two percent of the total dead load. The falsework shall be designed so that it will have sufficient rigidity to resist the assumed horizontal load without considering the weight of the concrete.

If the concrete is to be prestressed, the falsework shall be designed to support any increased or readjusted loads caused by prestressing forces.
Falsework shall be designed by the working stress design method, and stresses under all loads shall not exceed the maximum allowable stresses provided for in the current edition of AASHTO Guide Design Specifications for Bridge Temporary Works. The maximum allowable stresses provided for in the current National Design Specification (NDS) for wood construction may be used as an alternate to the AASHTO specifications for timber design. The maximum allowable horizontal shear stress in timber shall not exceed 125 pounds per square inch after all applicable modification factors have been applied. No increase in allowable stresses for repetitive member uses will be allowed.

Unless otherwise specified on the plans, deflection of the falsework span due to the weight of concrete only shall not exceed 1/240 of the falsework beam span irrespective of the fact that the deflection may be compensated for by camber strips.

In the case of post-tensioned structures, the falsework deflections shall not produce stresses in the structure at any time prior to post-tensioning greater than 0.8 times the modulus of rupture for plain concrete unless approved by the Engineer.

Falsework over or adjacent to roadways or railroads which are open to traffic shall be designed and constructed so that the falsework will be stable if subjected to impact by vehicles. Falsework posts which support members that cross over a roadway or railroad shall be considered as adjacent to roadways or railroads. Other falsework posts shall be considered as adjacent to

roadways or railroads only if they are located in the row of falsework posts nearest to the roadway or railroad and the horizontal distance from the traffic side of the falsework to the edge of pavement or to a point 10 feet from the centerline of track is less than the total height of the falsework and forms.

The vertical load used for the design of falsework posts and towers, but not footings, which support the portion of the falsework over openings, shall be increased to not less than 150 percent of the design load calculated in accordance with the provisions for design load previously specified.

Falsework posts adjacent to roadways or railroads shall consist of either steel with a minimum section modulus about each axis of 9.5 inches cubed or sound timbers with a minimum section modulus about each axis of 250 inches cubed.

Each falsework post adjacent to roadways or railroads shall be mechanically connected to its supporting footing at its base, or otherwise laterally restrained, so as to withstand a force of not less than 2,000 pounds applied at the base of the post in any direction except toward the roadway or railroad track. Such posts also shall be mechanically connected to the falsework cap or stringer. Such mechanical connection shall be capable of resisting a load in any horizontal direction of not less than 1,000 pounds.

For falsework spans over roadways, all exterior falsework stringers, stringers adjacent to the ends of discontinuous caps, the stringer or stringers over points of minimum vertical clearance, and every fifth remaining stringer, shall be mechanically connected to the falsework cap or framing. Such mechanical connections shall be capable of resisting a load in any direction, including uplift on the stringer, of not less than 500 pounds. Such connections shall be installed before traffic is allowed to pass beneath the span. For falsework spans over railroads, all falsework stringers shall be so connected to caps.

The falsework shall be located so that falsework footings or piles are at least three inches clear of railing posts and barriers and all other falsework members are at least one foot clear of railing members and barriers.

Falsework bents within 20 feet of the center line of a railroad track shall be sheathed solid in the area between 3 and 17 feet above the track elevation on the side facing the track. Sheathing shall consist of plywood not less than 5/8 inch thick or lumber not less than one inch thick (nominal). Bracing on such bents shall be adequate so that the bent will resist the required assumed horizontal force or 5,000 pounds, whichever is greater.

Drawings shall be prepared in accordance with the requirements of Subsection 105.03; Falsework calculations shall be sealed and signed by a professional engineer who is registered as a Civil or Structural Engineer in the State of Arizona.

The drawings shall be complete and fully detailed working drawings showing the dimensions and material for all parts, arrangement, spacing, and connections, and all provisions for adjustment and for measuring displacement. The falsework foundations, any connections or contacts with previously built structures or other works, and the means of protecting such other works from damage shall be detailed. The above data may be presented as convenient either on the drawings or in the design summary, which shall also describe the assumptions and types of calculations used in the design and the stresses and deflections found for critical points. For soffit fill construction, the equivalent of the above drawings and data shall be submitted, and in addition

the source, classification, and compaction requirements for the material and the results of any tests performed on the material. In no case shall the soffit fill be compacted to less than 90 percent compaction, and the top three feet shall be compacted to a minimum of 95 percent compaction when tested in accordance with the requirements of the applicable test methods of the ADOT Materials Testing Manual, as directed and approved by the Engineer. The soffit fill shall be topped with a lean concrete waste slab screeded to the required grades.

Falsework design will require written approval by the Engineer prior to commencing work and shall be in accordance with the requirements of Subsection 105.03.

In the application and design of deck falsework systems, all bridge girders, new or existing, shall be braced or tied to resist any forces that would cause rotation and torsion in the girders caused by the placing of concrete for diaphragms or decks. In lieu of this requirement, the Contractor's professional engineer shall provide sealed calculations to prove the bridge girders are adequate to resist those effects.

Except as provided for on the project plans, supports for deck falsework, forming or screed supports shall not be welded to steel girders, shear connectors, slab ties or girder stirrups.

Modifications of girders to support falsework and forming will not be allowed except as approved by the Engineer. This includes connections of any type in girder webs and flanges to support deck forming. Through-holes of any type in girder flanges will not be permitted. When modification of girders to support the deck falsework and forming has been approved by the Engineer, shop drawings for both the girders and the falsework and forming shall be submitted concurrently so that the review and approval of the drawings can be coordinated.

The tops of the erected girders shall be surveyed by the Contractor in the field prior to placement of the deck forming falsework. The survey shall include girder ends, tenth points, station and offset of survey point locations, or as specified in the project plans. This survey shall be submitted to the Engineer for evaluation. If the top of erected girder elevations are higher than the screed elevations minus the combined deck slab and the buildup thicknesses, adjustments may have to be made in the roadway profile, screed elevations, or girder bearing seat elevations. Encroachment into the deck slab of up to 1/2 inch will be allowed for random occurrences.

(B) Falsework Construction:

(1) General Requirements:

The falsework shall be constructed to conform to the falsework drawings. The materials used in the falsework construction shall be of the quality necessary to sustain the stresses required by the falsework design. The workmanship used in falsework construction shall be of such quality that the falsework will support the loads imposed on the falsework.

The Contractor shall provide temporary bracing for the falsework system to withstand all imposed loads during erection and removal of any falsework. Wind loads must be included in the design of the temporary bracing.

Falsework shall be founded on a solid footing safe against undermining and capable of supporting the loads imposed.

Wedges, screws or jacks shall be used in connection with falsework to set the forms to required grade and uniform bearing prior to placing concrete.

All wedges shall be in pairs to ensure uniform bearing. Laminated sections will not be permitted. If additional material is required under wedges, either single blocks or thicker wedges will be required. A sufficient number of wedges shall be used to cover the entire bearing area.

The Contractor shall provide tell-tales attached to the soffit forms and readable from the ground in enough systematically placed locations to determine the total settlement of the entire portion of the structure where concrete is being placed.

If any signs of distress develop during the placing of the concrete or the falsework shows any undue settlement or distortion, the work shall be stopped and the falsework corrected and strengthened.

(2) Submittals:

The Contractor shall submit to the Engineer the methods and sequences of falsework construction, including all equipment the Contractor plans on using to erect the falsework, and shall certify that the material used to construct the falsework meets the requirements of Subsection 601-3.02(B) (1).

If the Contractor elects to deviate from the superstructure placing diagram shown on the design plans, the Contractor shall submit a superstructure placing diagram showing concrete placing sequence and construction joint locations per the requirements of Subsection 601-3.03(B).

No concrete shall be placed in any forms supported by falsework until the Contractor's professional engineer or their designee has inspected the completed falsework, and the Contractor's professional engineer has issued a properly sealed and signed certificate that the falsework has been constructed according to the approved falsework drawings.

(3) Material:

When timber members are used to brace falsework bents which are located adjacent to roadways or railroads, all connections for such timber bracing shall be of the bolted type using 5/8 inch diameter or larger bolts, or shall be connected in a manner that will equal 100 percent capacity of the smaller member connected.

(4) Welding:

All field welds must be performed by an AWS certified welder. Contractors must submit copies of current AWS certification for all welders to the Engineer before any field welding begins.

Field welding and inspection of field welding must comply with the requirements of the most recent edition of the ANSI/AWS Structural Welding Code - Steel.

(C) Forms Construction:

(1) General Requirements:

Forms shall be of wood, metal or other suitable material conforming to the requirements specified herein. Forming plans for cast-in-place bridge girders shall be prepared in accordance with the requirements of Subsection 105.03.

The forms shall be mortar tight and shall be designed, constructed, braced and maintained so that the finished concrete will be true to line and elevation and will conform to the required dimensions and contours. They shall be designed to withstand the pressure of concrete with consideration given to rate of concrete placement, temperature of the concrete, use of set-retarding admixtures or pozzolanic materials in the concrete, the effects of vibration as the concrete is being placed and all loads incidental to the construction operations, without distortion, or displacement.

Stay-in-place forming shall not be used unless specified on the plans or approved by the Engineer. Expanded metal mesh may be used to form construction joints provided three-inch cover is maintained. The use of expanded metal mesh in bridge decks is prohibited.

Forms to be reused shall be maintained at all times in good condition as to accuracy of shape, strength, rigidity, mortar-tightness and smoothness of surface. Forms or form lumber unsatisfactory in any respect shall not be used.

Forms shall be constructed so that portions may be removed without disturbing forms that are to remain. Forms to be used when a Class II finish or ornamental work is required shall be constructed of metal, fiberglass coated panels, or plywood. All form joints shall be taped or caulked in an acceptable manner. Forms for this work shall be equivalent to first class pattern work.

Forms shall be filleted 3/4 inch at all exposed, sharp corners of the concrete, unless otherwise noted in the plans.

All forms shall be treated with an approved form release agent before concrete is placed. Any material which will adhere to or discolor the concrete shall not be used.

Forms shall be cleaned of all dirt, sawdust, water and other foreign material prior to placing concrete in the forms.

For narrow walls and columns where the bottom of the form is inaccessible, provisions shall be made for cleaning out extraneous material immediately before placing the concrete. The cells of box girders shall be cleared of all loose materials prior to the completion of deck forming when such forming is to remain in place. When the deck forming is to be removed, the cells of the box girders shall be cleared of all loose materials after removal of the forms.

(2) Wood Forms:

All lumber used for forms shall be free from defects affecting the accuracy of shape, strength, rigidity, mortar-tightness and smoothness of the surface. All lumber for forms above stream bed shall be plywood. All form lumber shall be securely fastened to the studding so that cupping cannot occur. Chamfer strips shall be of selected material dressed to true line and uniform dimensions. The interior surfaces of all forms in contact with concrete surfaces which will be exposed in the finished work shall be smooth and even. No uneven or offset joints or single boards projecting so that their impressions are left in the concrete will be allowed. Forms, as far

as practicable, shall be so constructed that the form marks will conform to the general lines of the structure. In general, grain of the lumber and direction of side joints shall be horizontal on wide faces and walls and vertical on narrow faces. If varying widths of panels are used, the wider panels shall be placed on the bottom and the narrower ones near the top. Panel end joints shall be staggered not less than three feet. Spreaders made of wood shall not be left in the concrete.

(3) Metal, Fiberglass and Other Forms:

The same provisions as specified under wood forms shall apply to metal and fiberglass forms and in addition, the following shall apply:

All bolts and rivet heads shall be countersunk. Clamps, rods, pins or other connecting devices shall be designed to hold the forms rigidly together and allow removal without injury to the concrete. Forms which do not present a smooth surface or are not properly aligned shall not be used.

Care shall be exercised to keep the forms free of dust, grease, or other foreign matter which will tend to discolor the concrete.

Metal forms shall be used for the casting of precast I-beams, box beams, and voided or flat slabs where the contract number of units combined dictates production runs equal to or longer than the precasting bed length. A limited number of units, having a total combined length at least one unit length less than bed length, may be cast with alternate forms, as approved by the Engineer. Dimensional tolerances using alternate forms shall conform with Subsection 601-4.02 (B).

Waste slabs used as a part of the forms shall be finished to the appropriate grade including any camber. The finished slab shall not vary more than 1/4 inch from the theoretical grade nor more than 1/4 inch from a 10 foot straightedge in any direction.

(4) Internal Cells:

Internal cells or voids in pre-cast box beams shall be constructed with either wood forms conforming to Subsection 601-3.02(C) (2), or with solid expanded polystyrene.

When solid expanded polystyrene is used, the entire top surface of the polystyrene of the internal void shall be covered with 3/8 inch thick, exterior-grade plywood. Butt joints of the plywood sections shall be at least two feet away from any joined section of polystyrene. Polystyrene sections shall be securely held together by an adhesive recommended by the manufacturer of the polystyrene.

All wood forms or polystyrene/plywood sections shall be securely held in place by nails, waterproof adhesive, or other means approved by the Engineer. Internal cells shall be completely sealed so no plastic concrete is allowed to enter the formed cell.

(D) Removal of Falsework and Forms:

(1) General Requirements:

No falsework or forms shall be relieved of load and no forms shall be removed without approval of the Engineer.

Falsework, excluding bridge deck cantilevered overhangs for cast-in-place prestressed structures, shall not be removed until after the prestressing steel has been tensioned and a minimum of 72 hours after the prestressing steel has been grouted. Falsework for the cantilevered bridge deck overhang shall be removed prior to prestressing but shall not be removed within seven days of concrete placement unless the concrete has attained a minimum compressive strength of 3,000 pounds per square inch. In no case shall falsework be removed within five days of concrete placement. On bridges with both transverse and longitudinal stressing the deck or overhang falsework shall not be removed until after the transverse prestressing has been completed unless shown otherwise on the plans. The deck overhang falsework shall then be removed prior to performing the longitudinal prestressing.

Falsework for cast-in-place non-prestressed structures or composite superstructures, excluding concrete above the bridge deck, shall not be removed until either:

(1) At least 10 days after the last concrete has been placed in each continuous span and until the compressive strength of all placed concrete has attained at least 70 percent of the required 28-day compressive strength; or
(2) At least five days after the last concrete has been placed in each continuous span and until the concrete has attained the required 28-day compressive strength.

The sloped exterior girders of cast-in-place box girder bridges shall be laterally braced or supported until the top slab (deck) concrete has been placed and has attained at least 70 percent of the required 28-day compressive strength.

Side forms for footings, beams, girders, box culverts, columns, railings, curbs or other members wherein the forms do not resist dead load bending may be removed after the concrete has set, and the Contractor shall cure and protect the concrete thus exposed in accordance with the requirements of Section 1006. The Contractor shall assume all risks and responsibility resulting from such removals. Forms for cast-in-place concrete, unless otherwise specified herein, shall not be removed until at least seven days after concrete has been placed in the forms, without the approval of the Engineer.

Placement of backfill material shall be in accordance with Subsection 203-5.03 (B). Where backfill is to be placed against both sides of a structural element, the backfill elevations on one side of the element shall not exceed the backfill elevations on the opposite side of the element by more than five feet.

Forms for precast concrete shall stay in place a minimum of eight hours.

The period of time between the placement of concrete in the top slab of a standard concrete box culvert (12 foot span or less) and the removal of the slab support forms may be reduced to 48 hours if the top slab remains supported along the center line of the culvert span by a continuous beam and line of posts erected as a part of the original slab form, and which will remain in place, undisturbed, a minimum of seven days.

If the Engineer allows the removal of forms before the specified curing period has elapsed, the Contractor shall cure the concrete for the remaining required curing time by one of the methods specified in Section 1006.

Forms for cast-in-place concrete above the bridge decks that require a Class II finish may be removed after the concrete has set, providing the required surface finishing of the concrete is completed within four days. If finishing cannot be completed within four days, the forms shall remain in place for seven days.

All forms shall be removed, except forms used to support the deck of box girders when no permanent access to the cells is available.

Care shall be taken in removing falsework and forms so as not to deface or damage the structure. Methods of removal likely to damage or cause overstressing of the concrete shall not be used.

All falsework shall be removed from under bridge superstructures prior to opening the structure to traffic. Falsework shall be removed in such a manner that excessive stresses are not induced into the structure. Holes shall not be drilled into the structure to facilitate removal of the falsework. Round blockouts may be used for such purpose providing the Contractor can submit evidence that the blockouts are not detrimental to the structure and the Engineer approves the use of the blockouts. The maximum blockout diameter shall not exceed six inches.

(2) Submittals:

The Contractor shall submit to the Engineer, prior to a pre-activity meeting, the methods and sequences of falsework removal, including all equipment the Contractor plans to use in removing the falsework. The falsework removal sequence shall consider load transfer when portions of the falsework have been removed, and the load is being carried by still in-place falsework. The falsework removal plan shall be reviewed and approved by a qualified person selected by the Contractor before submission to the Engineer. A qualified person, as defined by OSHA, is one who by possession of a recognized degree, certificate, or professional standing, or who by extensive knowledge, training, and experience, has successfully demonstrated their ability to solve or resolve problems relating to the subject matter, the work, or the project. The Contractor shall submit documentation of that person's status as the qualified person to the Engineer. No falsework removal shall take place until the Contractor's approved falsework removal plan has been reviewed by the Engineer.

The falsework removal plan shall include a hazard assessment, shall identify the Contractor's safety superintendent, and shall include plans to secure the area underneath the falsework and adjacent areas, including work zones and roadways that are within the potential fall zone of any equipment or falsework components while removal operations take place. No personnel shall be permitted under the falsework suspended by a hoisting system, unless the falsework components are secured by an additional temporary load support system. The Contractor's safety superintendent will be responsible for the safety of all personnel allowed into the area beneath and adjacent to falsework during falsework removal activities.

A pre-activity meeting shall occur prior to any falsework removal. During the pre-activity meeting, the Contractor shall provide the Engineer any necessary changes to the falsework removal plan, the area needed for falsework removal, and any impact the falsework removal will have on public safety, project schedule, traffic, and project activities not related to falsework removal.

601-3.03(C) Pumping Concrete: of the ADOT Standard Specifications is modified to add:

Where freeze-thaw durability is of concern (such as in bridge decks, overlays, approach slabs, and barrier walls), the concrete shall be sampled at the supply truck and the point of placement to determine air loss through the pump. If the loss of air, as measured between the supply truck and the point of placement, exceeds two percent, the Contractor shall employ measures acceptable to the Engineer to reduce the loss of air to less than two percent. Sampling and testing shall be performed in accordance with Subsection 1006-7.02.

601-3.05(D) Finishing Bridge Deck: of the ADOT Standard Specifications is revised to read:

(1) General:

Bridge decks that will be covered with a special riding surface or waterproofing membrane shall be lightly textured with a burlap drag during the plastic concrete state, after the finishing operation and smoothness test, as specified below, and prior to the curing process. Bridge decks exposed directly to traffic shall be grooved or tined as specified in Subsection 601-3.05(D)(2).

The finishing operation shall be completed before the water sheen disappears. The deck surface shall be finished to a smooth floated surface, free of mortar ridges, hollows, and any other projections. Water shall not be applied to the deck surface at any time during floating or finishing except that a fine fog mist may be applied as approved by the Engineer.

Fogging equipment shall be capable of applying water to the concrete in form of a fine fog mist in sufficient quantity to curb the effects of rapid evaporation of mixing water from the concrete. The fine fog mist shall be applied at a distance not to exceed 12 inches from the surface. Application by brushes or any other method that concentrates water will not be permitted.

Excess concrete, mortar, or paste produced by the finishing process shall not be discarded into areas of the bridge deck that will be covered by sidewalks, medians, curbs, or parapets, or otherwise incorporated into the work, but shall be removed and disposed of properly.

The finished surface of the concrete shall be tested with a 10 foot straightedge placed on the deck surface. For deck surfaces exposed directly to traffic, the surface plane shall not vary by more than 1/8 inch, as measured from the bottom of the straightedge. Deck surfaces to be covered with a special riding surface or waterproofing membrane shall not vary by more than 1/4 inch, as measured from the bottom of the straightedge.

Deck surface areas tested during the plastic state that do not meet the smoothness criteria specified above shall be corrected immediately, refinished, and retested. All corrected areas shall be textured to match the finish of the surrounding deck surface.

Should the deck surface require additional corrections or repair after the concrete has cured, as determined by the Engineer, such work shall be in accordance with Subsection 105.04. If the bridge deck corrections require mechanical grinding, all corrected areas shall be re-textured with sawed grooves to match the finish of the surrounding deck surface. After such corrective grinding and re-grooving is completed, the minimum remaining cover over the reinforcing steel shall be not less than 2 1/4 inches.

(2) Grooving and Tining:

(a) General Requirements:

Unless longitudinal grooving is specified on the plans, the Contractor shall texture the bridge deck, approach slab, and anchor slab with transverse grooves.

Grooves shall be placed with tine brooming while the concrete is still plastic; however, if an item for Bridge Deck Texturing (Sawed Grooves) is included in the bidding schedule, the bridge deck, approach slab, and anchor slab shall be textured with sawed grooves after the concrete has been cured.

A uniform textured surface of grooves shall be installed for the entire length of the bridge deck, approach slabs, and anchor slabs, except for those areas occupied by devices installed on the deck.

Widened bridge decks shall be finished to match the existing deck surface texture.

Bridge sidewalks shall be textured to a light broomed finish during the plastic concrete state.

(b) Tine Brooming:

Tine broom texturing shall occur after the Engineer has accepted the smoothness of the finished surface, and during the plastic concrete state, but prior to the curing process.

The tined grooves shall terminate at 12 inches $\pm$ 3 inches from the face of curbs, bridge rails or median dividers along each edge of the bridge deck surface. Texturing shall be stopped 9 inches to 12 inches from any devices installed on the bridge deck, including scuppers and expansion devices, whether perpendicular to the tined grooves or skewed.

The apparatus producing the texture grooves in the plastic concrete shall be mechanically operated from an independent self-propelled bridge. The bridge shall be used for texturing only, and shall be supported on the same steel rails used for the screed equipment. The tine brooming equipment shall be capable of producing grooves which meet the dimensional requirements specified in Subsection 601-4.01.

The timing of the texture operation in the plastic concrete is critical. The texturing shall be completed before the surface is torn or unduly roughened by the texturing operation. Grooves that close following the texturing will not be permitted.

Hand tine brooms shall be provided and available at the job site at all times when texturing plastic concrete.

(c) Sawed Grooves:

(1) General:

Sawed groove texturing shall occur after the Engineer has accepted the finished surface, and after the concrete has cured for at least seven days, but before the roadway is opened to traffic.

Grooving shall occur prior to the application of any concrete sealer if a sealer is specified in the contract documents.

A self-propelled texturing machine built for grooving of concrete surfaces shall be used for making the sawed grooves. The saw grooving equipment shall be capable of producing grooves which meet the dimensional requirements specified in Subsection 601-4.01.

Sawed groove texturing shall terminate at 12 inches $\pm$ 3 inches from the face of curbs, bridge rails or median dividers along each edge of the bridge deck surface. Texturing shall be stopped 9 inches to 12 inches from any devices installed on the bridge deck, such as scuppers and expansion devices that are perpendicular to the grooves.

For skewed expansion devices on the bridge deck, the direction of the grooves as specified above shall not be altered, and texturing shall terminate no closer than six inches nor farther than four feet from the joint armor. The maximum gap in texturing, from one side to other of skewed expansion devices, shall not exceed five feet.

Overlapping of grooves by succeeding passes will not be permitted.

(2) Equipment:

The self-propelled texturing machine shall have diamond-tipped circular saw blades mounted on a multi-blade arbor, and shall have a depth control device that detects variations in the deck surface and adjusts the cutting head height to maintain the specified depth of the groove. The texture machine shall also include devices to control alignment. Single blade equipment may be authorized by the Engineer where multi-blade assemblies are not capable of sawing to within one foot of obstructions. Flailing or impact type grooving equipment shall not be used.

The grooving equipment shall be equipped with vacuum slurry pickup equipment which shall continuously pick up water and sawing dust, and pump the slurry to a collection tank.

(3) Construction:

The Contractor shall submit a plan detailing the proposed layout of the texturing to the Engineer for approval at least seven days prior to the grooving operations. Spacing dimensions at the starting and ending point of each pass shall be noted. A description of the saw cutting equipment shall be included.

Prior to grooving operations, the Contractor shall provide two gauges, designed for verification of groove depth, to the Engineer for approval. The gauges shall be accompanied by the manufacturer's instructions for their use. During grooving operations the Contractor shall check the groove dimensions, under the observation of the Engineer, at random locations. If the minimum groove depth has not been achieved, the grooving operation shall stop and the necessary adjustments shall be made.

At the beginning of each work shift, the Contractor shall furnish a full complement of saw blades for each texturing machine that are capable of cutting grooves of the specified width, depth, and spacing.

If during the work a single grooving blade on a machine becomes incapable of cutting a groove, the Contractor shall continue work for the remainder of the work shift. The Contractor will not be required to cut the groove omitted resulting from the failed blade. If two or more grooving blades on a machine become incapable of cutting grooves, the Contractor shall cease operating the machine until it is repaired.

The Contractor shall continuously remove all slurry from the equipment throughout the grooving operations with a vacuum pickup, and shall dispose of the slurry at an approved off-site location, and in accordance with applicable laws and ordinances for disposal. All textured areas shall be flushed with clear water as soon as possible to remove any slurry material not collected by the vacuum pickup. Flushing shall be continued until all surfaces are clean and accepted by the Engineer.

The Contractor shall repair all damage to the expansion devices caused by the grooving operation in a manner satisfactory to the Engineer. If the Engineer determines that the expansion device cannot be repaired in a manner which will allow proper functioning of the system, the Contractor shall replace the device at no additional cost to the Department. The replacement shall be a new expansion device equal in all respects to the expansion device being replaced.

Damage to any other portion of the bridge deck, or to anything attached or embedded in the bridge deck, that is attributable to the Contractor's operations shall be repaired in a manner satisfactory to the Engineer at no additional cost to the Department.

601-3.07 Supporting, Handling, and Transporting Precast Concrete Items: the title and text of the ADOT Standard Specifications are revised to read:

601-3.07 Supporting, Handling, Transporting, and Erecting Precast Concrete Items:

(A) General:

After prestressing, precast members for major structures shall be handled or supported at or near the final bearing points for storage.

Precast items shall be supported during transporting in a manner that will allow reasonable conformity to the proper bearing points. At all times, the items shall be handled or supported securely in an upright position.

Items that have been damaged in shipment will be rejected at the point of delivery.

Lifting devices shall not project above the surface of the item after placement unless they will be embedded in a subsequent concrete pour, will have a minimum concrete cover of two inches, and will not interfere with the placement of reinforcing steel or concrete.

(B) Bridge Girder Erection:

Girders shall be placed accurately on bearings to avoid creating eccentricities capable of initiating imbalance.

Girders with shapes that exceed a height to width ratio of two shall be temporarily braced. The girder width shall be determined from the outside dimension of the bottom flange.

The Contractor shall secure such girders in position on the structure with temporary lateral bracing to resist loads as specified in the AASHTO Guide Design Specifications for Bridge Temporary Works. Lateral bracing shall be designed to allow for girder temperature movements. The bracing shall be placed prior to the release of the erection equipment from each girder.

Prior to erection of any girders, the Contractor shall provide a lateral bracing plan, prepared and sealed by a professional engineer registered in the State of Arizona, for the Engineer's review. Such bracing plan shall be included with the working drawings specified in Subsection 105.03, and shall include supporting calculations. A girder pre-erection meeting will be scheduled following the review and prior to erection of any girders. All parties involved in the installation shall be represented, and no girders shall be placed until the plan has been approved.

No traffic shall be allowed under each newly erected girder until the girder has been laterally braced.

Temporary bracing shall remain in place until after permanent concrete diaphragms are installed at the bents, or the girder is integrated with a permanent feature that restricts the girder's lateral movement.

601-4.01 **Surface Texture:** of the ADOT Standard Specifications is revised to read:

The grooves for decks exposed directly to traffic shall be rectangular in shape and shall be 1/8 inch ± 1/32 inch deep by 1/8 inch ± 1/32 inch wide. Spacing of the grooves shall be 3/4 inches ± 1/8 inch center to center. The textured groove depth will be measured in accordance with the requirements of Arizona Test Method 310.

601-5 **Method of Measurement:** the last paragraph of the ADOT Standard Specifications is revised to read:

No measurement or direct payment will be made for texturing of the bridge deck with a burlap drag or by tine brooming, the cost being considered as included in contract items.

Bridge Deck Texturing (Sawed Grooves), when included in the bidding schedule, will be measured to the nearest square yard. The area will be determined by the length of the bridge, approach slabs, and anchor slabs, multiplied by the width of the roadway between the face of curb or bridge rail on each side, less 2.0 feet. The quantity shown on the bidding schedule shall be considered final and will not be re-measured unless changes are specified by the Engineer, or if the Engineer or Contractor determines that the constructed area varies by an amount greater or less than two percent of the quantity shown on the bidding schedule. Such adjustments, if required, shall be in accordance with Subsection 104.02.

No measurement or direct payment will be made for the temporary bracing of erected girders, or for preparation of the girder bracing plan, the costs being considered as included in contract items.

601-6 **Basis of Payment:** of the ADOT Standard Specifications is modified to add:

The accepted quantities of sawed groove texturing, measured as provided above, will be paid for at the contract unit price, complete in place, including all labor, tools, equipment and incidentals.

SECTION 604 STEEL STRUCTURES

Steel Structures shall be in accordance with Section 604 of the ADOT Standard Specifications except as modified herein.

604-3.01 Shop and Working Drawings: of the ADOT Standard Specifications is revised to read:

The Contractor shall prepare shop and working drawings for submittal in accordance with the requirements of Subsection 105.03 of the ADOT Standard Specifications. The submittal shall allow sufficient time for review based on the days identified in Subsection 105.03 of the ADOT Standard Specifications, within the Contractor's schedule of work.

Working drawings for steel structures shall show complete fabrication and erection details including full detailed dimensions and sizes of component parts of the structure and details of miscellaneous parts such as pins, nuts, bolts, and rivets.

604-3.02 Fabrication: of the ADOT Standard Specifications is revised to read:

Fabrication of all metal for steel structures shall be in accordance with the approved shop drawings and shall conform to the requirements of Section 11, Steel Structures, of AASHTO LRFD Bridge Construction Specifications, except as specified herein.

The structural steel fabrication plant shall be certified under the AISC Quality Certification program to the standard and supplemental requirements for the type of work being performed. The following categories are defined under the AISC Quality Certification program:

Certified Bridge Fabricator - Simple (SBR)
Certified Bridge Fabricator - Intermediate (IBR)
Certified Bridge Fabricator - Advanced (ABR)
Certified Bridge Manufacturer – Component (CPT)

Fracture Critical members must be fabricated at a plant that has acquired an AISC Fracture Critical Endorsement (FCE).

Fabrication of steel components shall not begin until arrangements have been made for shop inspection.

In planing the surfaces of expansion bearings, the cut of the tool shall be in the direction of expansion.

604-3.04 Shop Inspection: of the ADOT Standard Specifications is revised to read:

For shop inspection of structural steel fabrication, the Contractor shall provide two written notifications to the Engineer, as follows:

(a) First written notification shall be submitted at least 60 days prior to beginning work in the shop per the requirements listed herein, and in Subsections 604-3.02. The first written notification shall include:

1) The name and address of the fabricator
2) The approximate fabrication schedule.
3) A description of the work to be fabricated.

Approved shop drawings are not required at the time of the first written notification, but are required before fabrication begins. Upon notification, the Engineer will contact ADOT Bridge Group to arrange for an inspector to be assigned to perform the steel shop inspection.

(b) Second written notification shall be submitted at least seven working days prior to beginning work in the shop in order for ADOT Bridge Group to schedule the shop inspection.

The Contractor shall furnish all facilities for the inspection of material and workmanship in the shop in accordance with the requirements of Subsection 106.06 of the ADOT Standard Specifications.

Inspection at the shop is intended as a means of facilitating the work and avoiding errors, and it is expressly understood that it will not relieve the Contractor from any responsibility in regard to defective material or workmanship and the necessity of replacing defective material or doing the work again. Reinspection costs incurred by the Department due to Contractor errors shall be reimbursed by the Contractor.

SECTION 701 MAINTENANCE AND PROTECTION OF TRAFFIC

Maintenance and protection of traffic shall be in accordance with Section 701 of the ADOT Standard Specifications except as modified herein.

701-4 **Method of Measurement:** of the ADOT Standard Specifications is revised to read:

No measurement shall be made for Maintenance and Protection of Traffic. The contract unit of measurement shall be lump sum.

701-5 **Basis of Payment:** of the ADOT Standard Specifications is revised to read:

Payment for Maintenance and Protection of Traffic shall be lump sum and shall be full compensation for all work necessary to provide Maintenance and Protection of Traffic.

SECTION 803 LANDSCAPE PLATING MATERIALS

Landscape plating materials shall be in accordance with Section 803 of the ADOT Standard Specifications except as modified herein.

803-1 **Description:** of the ADOT Standard Specifications is revised to read:

The work under this section consists of the following:

- Eradicating existing grasses and weeds by mechanical methods.

- Grading surfaces upon which granite mulch and decomposed granite shall be placed to ensure proper drainage.
- Furnishing, placing, and compacting granite mulch and decomposed granite, which shall include all excavation and backfilling.
- Maintaining these areas free of weeds and trash/debris during the construction and landscape establishment phases of the project.

All work under this section shall be completed in accordance with the details shown on the Project Plans and the requirements of these Specifications.

803-2.02 **Decomposed Granite and Granite Mulch:** of the Standard Specifications is modified to add:

Decomposed granite shall be 3/4" screened.

The salvage and reuse of existing decomposed granite from the project area will not be allowed. All decomposed granite shall be new.

The colors for the decomposed granite shall be as shown in the tables below. No decomposed granite or substitute decomposed granite shall be used on the project until the color and source have been approved by the Owner. Each decomposed granite type shall come from a single source to ensure uniformity of color.

Decomposed granite color selections acceptable for use are as follows:

<u>Decomposed granite:</u>

COLOR	GRANITE NAME	SOURCE
Brown	Express Brown	Granite Express
Brown	Copper Canyon Brown	Kilauea Crushers
Brown	Apache Brown	Pioneer Landscape Materials

The Contractor may propose an alternate color from an alternate source for review and approval by the Owner.

For color verification of the specified color and/or for approval of an alternate color, the Contractor shall provide a 5-gallon bucket material sample for review.

Decomposed Granite supplied for use on the project shall meet the gradation requirements as shown in the following table:

3/4” Screened	
Sieve Size	**Percent Passing**
3/4 inch	100
1/2 inch	45-70
No. 40	5 – 20

803-3 **Construction Requirements:** of the Standard Specifications is modified to add:

Granite to be used on the project and all granite samples prior to placement on the job site shall meet the following requirements:

- Copy of the environmental permit for each granite source pit.
- The cost for any approved alternate decomposed granite color will be paid for at the contract bid price.
- The Contractor shall provide a 5-gallon bucket sample for each color required on the project and each proposed alternate color.
- Alternate granite samples shall have been approved by the Engineer prior to color submittal and on site placement for review and approval.
- Alternate granite samples shall be submitted a minimum of 14 calendar days prior to granite installation for review and approval.

The granite color review and approval process shall be coordinated by the Contractor with the Owner and requires a 1-week minimum advance notice by the Contractor. All granite colors and color alternates are as approved by the Owner. Granite colors are evaluated by comparison to approved color samples.

The Contractor shall remove all non-planted vegetation from all areas designated to receive decomposed granite (by chemical or mechanical means) and maintain the designated areas "vegetation-free" for a minimum period of 14 calendar days prior to placement of the granite mulch and decomposed granite, or as specified by the Owner.

Prior to placement of the decomposed granite, designated areas to receive decomposed granite shall be completely free of all grass, weeds, or other miscellaneous vegetation growth.

When using herbicides, a pre-emergent herbicide (Gallery, Surflan, Barricade or equivalent) shall be applied to all granite material areas in the manner recommended by the manufacturer to prevent germination of noxious weeds. The Contractor shall comply with all applicable portions of Subsection 803-3.02 of the specifications.

803-3.02 **Decomposed Granite and Granite Mulch:** of the Standard Specifications is modified to add:

The sub-grade upon which the decomposed granite shall be placed, shall be graded and compacted to promote proper drainage, as approved by the Engineer. The sub-grade shall be compacted to between 85 to 90-percent of the maximum proctor density, as determined in accordance with the requirements of Arizona Test Methods 230 or 235, depending on the test method used to determine the compaction density (Sand Cone or Nuclear Method).

All vehicles used for spreading, grading and raking the decomposed granite shall have one set of wheels with floatation tires having a minimum width of 18-inches to allow equal compaction of the decomposed granite.

Decomposed granite shall be placed to a depth of 2-inches. After rough spreading and rough grading of the decomposed granite within the designated areas, the decomposed granite shall be raked evenly and thoroughly to blend the different gradation sizes.

The use of conveyor belt type equipment for placing decomposed granite shall not relieve the Contractor from the requirements of compacting the granite much.

After placement, the decomposed granite shall be saturated with water to an optimum moisture level as recommended by the supplier. The Engineer will approve the amount of water necessary to aid in the compaction of the decomposed granite, prior to application.

During the final spreading and final grading operations, all surfaces within the decomposed granite areas shall be passed over by the spreading and grading equipment a minimum of 2-times.

Equipment operations for spreading, grading, raking, chemical application, water settling, and any other operations shall be done in a manner that uniformly maximizes the vehicle(s) wheel compaction over the surface area.

The pre-emergent herbicide shall be utilized in the manner recommended by the manufacturer to prevent germination of weeds/undesirable plant species, and shall be Gallery, Pendulum AquaCap, Surflan, Dimension, or an approved equal, and shall be applied at a rate based on product information/data for best control effects. Pre-emergent herbicide shall also be employed to the designated decomposed granite and granite mulch area, prior to the final water settling operation. Selection of pre-emergent herbicide products shall be based on the type of weeds or undesirable plant species to be treated as evaluated by a Construction Professional Landscape Architect and approved by the Engineer. The first application of pre-emergent herbicide and each subsequent application shall be from different products to optimize the lasting result of designated decomposed granite and granite mulch area.

After placing, spreading and grading the decomposed granite, the Contractor shall water settle the total thickness of the decomposed granite, to remove the fine material from the surface. The water settling operation, noted above, shall be completed by applying water at minimum depth of ½-inch over the decomposed granite placed or as approved by the Engineer.

803-4 Method of Measurement: of the Standard Specifications is modified to add:

Decomposed granite will be measure by the square yard of material in place at the specified thickness. The quantity shown in the Bid Schedule will be used for payment of Item 8030104 – Decomposed granite (3/4" Screened), unless both the Contractor and the Engineer mutually agree that a variation in excess of 10 percent of this quantity exists. If a variation exists, the Engineer will determine the variation based on the project plans and evidence provided by the Contractor. Acceptable form of evidence can be construction survey – such as making field measurements for verification as approved by the Engineer.

803-5 Basis of Payment: of the Standard Specifications is modified to add:

Payment for the accepted quantities of decomposed granite measured as provided above will be made at the contract unit price per square yard, which price shall be full compensation for the work complete in place.

There shall be no separate measurement or direct payment for required or requested samples, grading, compaction, pre-emergent herbicide. The cost for this work is considered to be included in the cost of the contract item.

SECTION 810 EROSION CONTROL AND POLLUTION PREVENTION

Erosion control and pollution prevention shall be in accordance with Section 810 of the ADOT Standard Specifications except as modified herein.

810-2.06(A) General: the first paragraph of the ADOT Standard Specifications is revised to read:

Sediment logs, sediment wattles, and fiber rolls shall be manufactured or constructed rolls of fiber matrix, secured with netting, and used for the purpose of controlling erosion by slowing high flow water velocity and trapping silt sediments. Netting for fiber rolls and sediment wattles shall have a minimum durability of one year after installation, and shall be tightly secured at each end of the individual rolls. All wheat straw used in sediment logs, sediment wattles, and fiber rolls shall comply with the requirements of Subsection 810-2.05(B).

SECTION 901 MOBILIZATION

Mobilization shall be in accordance with Section 901 of the ADOT Standard Specifications except as modified herein.

The Contractor shall be responsible for providing a construction yard and/or staging area as needed for this project at no additional cost to the Owner, the cost being considered included in the cost of contract item 9010001.

901-5 Basis of Payment: of the Standard Specifications is revised to read:

Payment for mobilization, measured as provided above, will be made at the contract lump sum price, which shall be full compensation for supplying and furnishing all materials, facilities and services and performing all the work involved as specified herein.

Partial payments under this item will be made in accordance with the following provisions. Reference herein to the adjusted contract shall mean the original contract amount exclusive of mobilization:

> The first payment of the lump sum price for mobilization will be paid after the Preconstruction Conference provided that all submissions required under Subsection 108.03 are submitted by the Contractor at the Preconstruction Conference to the satisfaction of the Engineer. The amount paid for the first partial payment will be in accordance with Table 901-1.
>
> The second payment of the lump sum price for mobilization will be made when the Engineer has determined that a significant amount of equipment has been mobilized to the project site which will be used to perform portions of the contract work. The amount paid for the second partial payment will be in accordance with Table 901-1.
>
> The third payment of the lump sum price for mobilization will be made on the first estimate following completion of 5 percent of the adjusted contract. Such percentage determination will not include partial payments for material on hand. The amount paid for the third payment will be in accordance with Table 901-1.

The fourth payment of the lump sum price for mobilization will be made on the first estimate following completion of 10 percent of the adjusted contract. Such percentage determination will not include partial payments for material on hand. The amount paid for the fourth payment will be in accordance with Table 901-1.

The total sum of all payment shall not exceed the original contract lump sum price for mobilization, regardless of the fact that the Contractor may have, for any reason, shut down its work on the project or moved its equipment away from the project and back again.

TABLE 901-1 AMOUNT ALLOWED FOR MOBILIZATION DURING THE LIFE OF THE CONTRACT		
Contract Amount: $	**% Of Contract**	**Basis Of Payment**
0 - 5,000,000	12% *	25% of the lump sum price for mobilization or 3% of the original contract amount, whichever is less.
5,000,000 +	10% *	25% of the lump sum price for mobilization or 2.5% of the original contract amount, whichever is less.
* If the price bid for mobilization exceeds this percentage, any excess will be paid to the Contractor upon completion of the contract.		

The adjustment provisions in Section 104 and the retention of funds provisions in Section 109 shall not apply to the item of mobilization.

When other contract items are adjusted as provided in Section 104, and if the costs applicable to such items of work include mobilization costs, such mobilization costs will be considered as recovered by the Contractor in the lump sum price paid for mobilization, and will be excluded from consideration in determining compensation under Section 104.

When mobilization is not included as a contract item, full compensation for any necessary mobilization required will be considered as included in the prices paid for the various contract items involved and no additional compensation will be made.

SECTION 902 CHAIN LINK FENCE

Chain link fence shall be in accordance with Section 902 of the ADOT Standard Specifications.

ITEM 9020251 RECONSTRUCT FENCE GATE FROM SALVAGE

Description:

The work under this item shall consist of reconstructing existing gates from salvage at the locations shown on the project plans and in accordance with these Special Provisions.

Materials:

Materials from existing gates shall be reused when reconstructing gates.

All posts, pipe, fabric or hardware which are deemed by the Engineer to be unsuitable for use in reconstructing the fence gates shall be removed and disposed of as directed by the Engineer. If any of these materials require replacement to complete the fence gate construction, the materials shall be furnished by the Contractor and will be paid for as specified in Subsection 109-04.

New materials shall conform to the requirements of Subsection 902-2 of the ADOT Standard Specifications.

Construction Requirements:

Gates shall be reinstalled in accordance with the requirements of Subsection 902-3 of the ADOT Standard Specifications.

The Contractor may, at its option and at no additional cost to the Owner, construct new fence gates in lieu of constructing fence gates from salvage. If the Contractor elects to construct new fence gates, the fence gate materials originally designated for construction from salvage shall become the property of the Contractor.

Method of Measurement:

Reconstruct fence gate from salvage will be measured per each.

Basis of Payment:

The accepted quantities of reconstruct fence gate from salvage, measured as provided above, will be paid for at the contract unit price per each, which price shall be full compensation for the work, complete in place, including excavation, footing concrete, fittings, hardware and gate bracing.

Any new posts, pipe, fabric or hardware furnished by the Contractor to replace salvaged fence components deemed by the Engineer to be unsuitable for use, will be measured and paid for in accordance with the provisions of Subsection 104-02 (C).

ITEM 9030008 FENCE (SEE FENCE DETAIL, SHEET 6)

Description:

The work under this item shall consist of constructing new fence to the forms, shapes and dimensions shown on the project plans and in accordance with these Special Provisions.

Materials:

Post materials shall conform to the requirements of Subsection 902-2.02 of the ADOT Standard Specifications.

Concrete for post footings shall be utility concrete conforming to the requirements of Section 922 of the ADOT Standard Specifications.

Fittings and hardware shall conform to the requirements of Section 902-2.07 of the ADOT Standard Specifications.

Construction Requirements:

Fence shall be constructed in accordance with the requirements of Subsection 902-3 of the ADOT Standard Specifications.

Welding shall be in accordance with and conform to the requirements of Subsection 604-3 of the Specifications.

Method of Measurement:

Fence will be measured by the linear foot along the top of the completed fence from outside to outside of end posts, excluding the widths of gate openings. Gate posts and latch posts will be considered as included in the measurement of the completed fence.

Basis of Payment:

The accepted quantities of fence, measured as provided above, will be paid for at the contract unit price per linear foot, which price shall be full compensation for the work, complete in place, including excavation, concrete, welding, fittings, and hardware.

ITEM 9031001 TEMPORARY FENCE

Description:

The work under this item shall consist of furnishing, installing, maintaining and removing non-metallic temporary fence at the locations shown on the project plans in accordance with the applicable requirements of Section 903 of the ADOT Standard Specifications and these Special Provisions.

Materials:

Fencing materials shall manufactured using a plastic mesh with minimum opening size of 1.5” and be of a fluorescent color. Height requirement shall be a minimum of 36”.

Metal t’ style posts of sufficient length shall be used to secure the fence materials to their full height and into the ground surface.

Construction Requirements:

Temporary fence shall be erected prior to any construction activities onto private property. The line of temporary fence as indicated on the plans shall be staked or marked out on the ground by the Contractor and approved by the Engineer prior to installation.

Posts shall be securely driven on six foot-maximum centers, normal to the ground, to a depth 1/3 of the total post length. Posts shall be placed in a vertical position.

Fence fabric shall be placed along the side of all posts. Ends of fencing segments shall overlap a distance of at least one half the fence height.

Fencing shall be secured to posts with wire or cable ties at top, middle and bottom of post. Fastener shall be tight enough to prevent the fencing from slipping down. Overlaps shall be securely fastened.

Existing fences that are to remain in place and which have been damaged by the Contractor's operations shall be replaced or restored by the Contractor at no additional cost to the Department.

Fence shall be constructed within the right-of-way and temporary construction easements as shown on the plans.

The Contractor shall maintain the fence immediately after erection and continue until project completion or as directed by the Engineer. Maintenance shall include replacing damaged post(s) and fencing, re-fastening and tightening fencing, and restoring fence to its intended height.

Prior to project completion, the temporary fence shall be removed. Removed fence shall become the property of the Contractor and disposed of offsite. Cavities resulting from the removal of posts shall be backfilled and compacted to the satisfaction of the Engineer.

Method of Measurement:

Temporary Fence will be measured by the linear foot along the ground line of the fence completely installed.

Basis of Payment:

The accepted quantities of temporary fence, measured as provided above, will be paid for at the contract unit price per linear foot, which price shall be full compensation for the work, complete in place, including excavation, backfill, compaction, maintenance, removal and disposal of temporary fence.

ITEM 9050701 W-BEAM & POST RAILING (TXDOT TYPE T631LS)

Description:

The work under this item shall consist of furnishing and installing w-beam and post railing type T631LS and rounded w-beam end sections in accordance with the requirements of the plans and these special provisions.

Materials:

Structural steel material shall conform to ASTM 588 Grade 50, ASTM A847 Grade 50W and ASTM A709 Grade 50W and be supplied in accordance with and conform to the material requirements of Subsection 604-2 of the Specifications and the requirements of the Project Plans.

All steel components for the traffic rail shall utilize weathering steel.

Anchor bolts shall conform to ASTM F1554 Grade 105.

High-strength bolts shall be ASTM A325 Type 3 with A563 grade DH3 nuts and F436 Type 3 washers supplied in accordance with and conforming to the material requirements of Subsection 604-2 of the Specifications and the requirements of the Project Plans.

Welding shall be in accordance with and conform to the requirements of Subsection 604-3 of the Specifications.

Construction Requirements:

W-beam post and railing shall be constructed in accordance with the requirements of the Project Plans unless noted otherwise.

Prior to fabrication, the Contractor shall submit four sets of shop drawings to the Engineer for approval in accordance with the requirements of Subsection 105.03 of the ADOT Standard Specifications. The shop drawings shall show complete details of the method of installation to be followed, including a temperature correction chart for adjusting the dimensions of the joint according to the ambient temperature and any additions or rearrangements of the reinforcing steel from that shown on the project plans.

The Contractor shall make the railing's line and grade true and shall not follow unevenness in bridge deck or approach slab. Unless the plans require otherwise, the Contractor shall construct the railing with the posts normal to the grade of the structure.

Unless the plans provide otherwise, the Contractor shall set anchor bolts during concrete placement and shall locate the anchor bolts to provide the correct railing alignment. The anchor bolts shall not project more than 3/8 inch beyond the nut after attaching the rail.

The Contractor shall shim to align each railing post and end base plate as shown on the project plans.

Rounded w-beam end sections shall be installed at the end of each railing as shown on project plans.

Method of Measurement:

W-beam and post railing will be measured by the linear foot from end-post to end-post.

Basis of Payment:

The accepted quantities of w-beam and post railing, measured as provided above, will be paid for at the contract unit price per linear foot, which price shall be full compensation for the work, complete in place including all steel, rail, hardware, weathered components and other materials.

W-beam end sections will not be measured or paid separately and will be considered as included in the cost of w-beam and post railing.

ITEM 9130005 RIPRAP (GABIONS)

Description:

The work under this items shall consist of furnishing and installing gabion protection as shown on the project plans and in accordance with the requirements of the ADOT Standard Specifications and these Special Provisions.

Materials:

(A) Metal Items:

At the Contractor's option, either woven wire mesh or welded wire mesh (welded mesh) may be used. For each individual gabion, the same mesh style shall be used for the base, front, ends, back, diaphragms, and lid panels. Each gabion shall be divided into cells of equal length, no greater than 3 feet, by diaphragm panels.

Mesh: Individual wires of either mesh style (woven or welded) shall conform to the definitions and requirements of ASTM A641 for "carbon steel", zinc-coated wire. All zinc coated gabion shall conform to ASTM A975 Style 1 (zinc coated gabions) for woven gabion and ASTM A974 Style 1 for welded gabion and shall meet the following requirements:

Characteristic	Test Designation	Requirement
Minimum tensile strength	ASTM A370	60,000 psi
Zinc Coating	ASTMA641	Class 3
Wire Size (Minimum) Wire Diameter (Minimum) Galvanizing	USA Steel Wire Gage ASTM A 641 ASTM A 641, Table 3 ASTM A 641, Table 1 And ASTM A90	11 0.120 inch 0.116 inch 0.85 oz/sf
Wire Size (Minimum) Wire Diameter (Minimum) Galvanizing	USA Steel Wire Gage ASTM A 641 ASTM A 641, Table 3 ASTM A 641, Table 1 And ASTM A 90	9 0.148 inch 0.144 inch 0.90 oz/sf

Mattress-style gabion baskets that are 12 inches high shall be manufactured from either 11 gage welded mesh or twisted mesh. Cubical-celled gabion baskets that are 36 inches high by 36 inches wide shall be fabricated from 11 gage twisted mesh or welded mesh gages between 11–gage and 9–gage, inclusive.

Twisted-mesh wires shall form a uniform hexagonal pattern and shall be formed with a non-raveling twist. The area of the hexagonal opening shall not exceed 3-¼ inch. Twisted-mesh gabion panels shall be manufactured from 11-gage wires with 9-gage selvage wires.

Welded-mesh wires shall form a grid pattern. Welds shall be made by resistance welding. Welds and panels shall also conform to ASTM A 185, "Steel Welded Wire Fabric -Plain for Concrete," except weld shears shall be 600 pounds force for 11-gage wires and 800 pounds force for 9-gage wires.

Joints: Wires used to form joints shall conform to the definitions and requirements of ASTM A 641 for "carbon steel", zinc-coated wire and shall meet the following requirements:

Characteristic	Test Designation	Requirement
Minimum tensile strength	ASTM A370	60,000 psi
Zinc Coating	ASTMA641	Class 3
Tie Wire Wire Size (Minimum) Wire Diameter (Minimum) Galvanizing	 USA Steel Wire Gage ASTMA641 ASTM A 641, Table 3 ASTM A 641, Table 1 And ASTM A90	 13.5 0.086 inch 0.083 inch 0.70 oz/sf
Spirals Wire Size (Maximum) Wire Diameter (Minimum) Galvanizing	 USA Steel Wire Gage ASTM A641 ASTM A 641, Table 3 ASTM A 641, Table 1 And ASTMA90	 9 0.148 inch 0.144 inch 0.90 oz/sf

Spiral binders shall have a 3-inch separation between continuous, successive loops. Overlapping fasteners (rings) may be used in lieu of, or to complement, lacing wire for basket assembly and installation. The spacing of the fasteners during all phases of assembly and installation shall be in accordance with spacing based pull apart resistance of 1,400 lb/ft for galvanized mesh when tested in accordance with ASTM A975 section 13.1.2, with a nominal spacing of 4 in., and not to exceed 6 in.

- Galvanized Fasteners: Diameter = 0.120 in. in accordance with ASTM A313, Type 302, Class I.
- Tensile strength: 230,000 to 273,000 psi in accordance with ASTM A764-95(2001).
- Proper installation of rings: A properly formed ring fastener shall have a nominal overlap of one (1) in. after closure.

Internal cross tie connecting wires or preformed stiffeners shall be at least 13.5-gage. Each wire shall also meet the minimum requirements of the wire in this specification. Internal connecting shall be provided on a 1-foot grid.

The Contractor may request acceptance of alternative fasteners. Alternative fasteners for woven and welded gabions must be tested in accordance with ASTM A975 Table 2 panel to panel connection. Contractor shall provide copy of the tests made by a recognized laboratory 15 days prior to construction of gabions. The Contractor's request shall describe how and where the proposed alternative fasteners will be used.

Gabions which have been constructed with unacceptable alternative fasteners shall be removed or reconstructed at no additional cost to the Department at the discretion of the Engineer.

Certificates of Compliance conforming to the requirements of Subsection 106.05 shall be submitted.

(B) Soil Anchor Stakes:

Soil anchor stakes shall meet the requirements of Subsection 913-2.02 (F) of the ADOT Standard Specifications.

(C) Gabion Baskets:

Acceptable gabion basket dimensions of width, height and length are as shown on the project plans. The height, width, or length of individual gabions shall not vary more than 5 percent from the dimensions in these specifications or as shown on the plans.

Woven mesh wire baskets shall consist of a uniform hexagonal wire mesh woven in a double twist pattern with openings of approximately 2 ½ inches by 3 ¼ inches, fabricated in such a manner as to be non-raveling, and designed to provide the required flexibility and strength.

Welded wire baskets shall consist of wire spaced at 3 inches center to center.

Empty gabion baskets shall be manufactured individually, in the factory with base, front, ends, back, and diaphragms all connected together on one side minimum, lids may be assembled on the site. Gabion baskets shall be assembled such that the strength and flexibility along the joints are in accordance with ASTM A975 (woven gabion) and A974 (welded gabion) panels to panels connection.

(D) Riprap:

Riprap shall meet the requirements of Subsection 913-2.01 (D) of the ADOT Standard Specifications.

(E) Bedding Material and Earthwork:

Bedding Material shall consist of granular material having a maximum dimension of two inches and shall be free of clay or organic material.

The earthwork/grading included with this item shall consist of providing a specific soil cover over the in-place gabion or gabion mattress bank protection as shown in the project details and plans, excavation and backfilling required to construct the toe-down, and all excavation and backfilling required to attain required compaction.

Excavation and backfilling required as shown on the project plans shall be in accordance with ADOT Standard Specifications Section 203-4 and 203-10.

Control of groundwater necessary to complete the excavation and placement of the gabions will be considered incidental to the gabion construction.

(F) Filter Fabric:

Geotextile filter fabric shall meet the requirements of Subsection 913-2.05 of the ADOT Standard Specifications.

Construction Requirements:

(A) General:

Areas on which bank protection is to be constructed shall be cleared, grubbed, and excavated or backfilled in accordance with the requirements of the appropriate sections of these Special

Provisions and ADOT Standard Specifications to produce a ground surface in reasonable conformance with the lines and grades shown on the project plans or established by the Engineer.

Gabion construction may require excavation below the water table. Dewatering or other methods to control the groundwater may be required. Placement of gabions through water will not be permitted unless otherwise approved by the Engineer.

(B) Gabions:

The gabion bed shall be excavated to the width, line and grade as shown on the plans. The gabions shall be founded on this bed and laid to the lines and dimensions required. Excavation for toe shall be made to the neat lines of the toe.

Gabions shall be preassembled in the factory with sides, ends, and diaphragms all connected together, on side minimum where they can be assembled at the construction site into rectangular units of the specified sizes. Lids may be assembled on site. Gabions are to be of single unit construction; the base, ends and sides either to be woven into a single unit or one edge of these members connected to the base section of the unit.

Where the length of the gabion exceeds its horizontal width, the gabion is to be equally divided by diaphragms, of the same mesh and gauge as the body of the gabions, into cells whose length does not exceed the horizontal width. The gabion shall be furnished with the necessary diaphragms secured in proper position on the base section in such a manner that no additional tying at this juncture will be necessary. All perimeter edges of gabions shall be securely selvedged or bound so that the joints formed by tying the selvedges have the minimum connection strength.

Gabions shall be placed to conform to the specifications and dimensions shown on the project plans. Rock for gabions shall be placed in close contact in the unit so that maximum fill is obtained. The units may be filled by machine with sufficient handwork to accomplish requirements of this specification. Units shall be overfilled to a level surface by 1.5 to 2 inches before closing the lid to compensate for settlement.

The exposed face or faces shall be hand-placed using selected rocks or prevent bulging of the gabion cell and to improve appearance.

Each cell of the 3 foot deep gabions shall be filled in three (3)-12 inch lifts. Two connecting tie wires shall be placed between each lift in each cell. All connecting tie wires shall be looped around two mesh openings and the ends of the wires shall be securely twisted to prevent loosening. Care shall be taken to protect the vertical panels and diaphragms from being bent during filling operations.

The last lift of rock in each cell shall be placed level with the top of the gabion in order to properly close the lid and provide an even surface for the next course.

All gabion units shall be tied together each to its neighbor along all contacting edges in order to form a continuous connecting structure.

Empty gabions stacked on filled gabions shall be laced to the filled gabion at the front, side and back. Interlocking rings or overlapping rings may be used for assembly of individual gabions.

There shall be a ring in each mesh opening along the joint in lieu of tie wire or spiral binders. The use of alternative joint fasteners shall be approved by the Engineer in writing.

(C) Filter Fabric:

Filter fabric shall be placed on all areas to receive gabions, as shown on the project plans, prior to placement of the gabion. The surface to receive the filter fabric shall be free of obstructions, depressions, and debris. The fabric shall be loosely laid and not placed in a stretched condition.

The strips of filter fabric shall be placed to provide a minimum 24-inch overlap along each joint. On horizontal joints, the uphill strip shall overlap the downhill strip. On vertical joints the upstream strip shall overlap the downstream strip. The fabric shall be protected at all times during construction from extensive exposure to sunlight.

Placement of the gabions shall be done in such a manner as not to damage the fabric. If in the opinion of the Engineer, the fabric is damaged or displaced during the placement of the gabion or gabion mattress to the extent that it cannot function as intended the Contractor shall remove the rock and replace the filter fabric.

The filter fabric shall be attached to the bottom and side of the gabions that make up the outside perimeter of a finished bank protection unit. Typically, this attachment will be made horizontally along the top-of-bank and end-of-apron, and vertically along the upstream and downstream limits of each continuous unit of bank protection.

(D) Testing:

When requested by the Engineer, the Contractor shall provide a copy of all tests made by an approved laboratory for the following properties:

For woven gabions all tests for zinc coating, mesh tensile strength, panels to panels connection and salt spray test when alternative fastener is used shall be made in accordance with ASTM A975 for Double-Twisted Hexagonal Mesh Gabions and Revert Mattresses.

For welded gabions all tests for zinc coating, welds shear strength and panels to panels connection shall be made in accordance with ASTM A974 for Welded Wire Fabric Gabions and Gabion Mattresses.

All tests shall not be older than 5 years.

(E) Plans and Working Drawings:

Prior to fabrication of the baskets, the Contractor shall prepare shop and working drawings in accordance with the requirements of Subsection 105.03 of the ADOT Standard Specifications. The shop drawings shall show complete fabrication and erection details for the frames including detailed dimensions and sizes of component parts.

Method of Measurement:

Riprap (Gabions) will be measured by the cubic yard by computing the volume of the rock filled wire baskets as shown on the respective details of the project plans.

Basis of Payment:

Riprap (Gabions) measured as provided above, will be paid for at the contract unit price per cubic yard for the work unique to each of the two details. This price shall be full compensation for the work, complete in place, including excavation and dewatering or groundwater control as defined in this section, removal of existing gabions as shown on the project plans, backfilling gabions, furnishing and installing the gabion baskets, mattresses, rock, riprap drains, filter fabric, granular beddings, wire ties, anchor stakes, and miscellaneous metal items and associated work and testing described herein and as shown on the project plans.

ITEM 9240010 FORCE ACCOUNT WORK (UNFORESEEN CONDITIONS)

Description:

The work under this item shall serve as a contingency fund for Change Orders, as directed by the Owner's Engineer, in regards to unforeseen conditions and changes to the Scope of Work required to complete the work originally intended.

Measurement and Payment:

Measurement and payment for unforeseen conditions will be made on a Force Account basis in accordance with Section 109-04 of these Special Provisions.

SECTION 925 CONSTRUCTION SURVEYING AND LAYOUT

925-1 Description:

The work under this section shall consist of furnishing all materials, personnel, and equipment necessary to perform all surveying, staking, establishment of all pit boundaries, laying out of haul roads, and verification of the accuracy of all existing control points which have been provided by the Department. The control point verification process shall include locating and making ties to all section line, right-of-way, and roadway monuments in the vicinity of the proposed work. Included in this work shall be all calculations required for the satisfactory completion of projects, including grade and drain, overlay, safety, landscape, rest areas, structures, surfacing projects, or combinations thereof, in conformance with the plans and specifications. The work shall include establishing and marking 'as-built' elevations on bridges, and culverts. The work shall be done under the direction of a registered professional engineer or a registered land surveyor employed by the Contractor. The crew chief shall be (National Society of Professional Surveyors) NSPS Certified Level III, (National Institute for Certification in Engineering Technologies) NICET Certified Level III, or a registered Land Surveyor-in-Training. A minimum of 50 percent of the survey crew shall be either NSPS Certified Level II or NICET Certified Level II. All work affecting real property boundaries as described in Arizona State Board of Technical Registration Standards shall be performed under the direction of a registered land surveyor licensed in the State of Arizona.

When construction of new right-of-way monuments is included with the project, the Department will establish all initial right-of-way monuments prior to construction and forward a right-of-way staking plan to the Contractor. Prior to completion of the construction project, as directed by the Engineer, the Department will supply, install, and stamp the final right-of-way markers.

All other existing cadastral corners, such as section corners, quarter corners, intersecting street centerline monuments, and property corners that are destroyed by the Contractor shall be re-established by a registered land surveyor employed by the Contractor.

Measurement of all pay quantity items will be the responsibility of the Department.

When utility adjustments are a part of the contract, the Contractor shall perform all layout work and set all control points, stakes and references necessary for carrying out all such adjustments.

The Contractor shall not employ or engage the services of any person or persons in the employ of the Arizona Department of Transportation for the performance of any of the work as described herein.

925-2 Materials, Personnel and Equipment:

Materials and equipment shall include, but shall not necessarily be limited to, vehicles for transporting personnel and equipment, properly adjusted and accurate survey equipment, straightedges, stakes, flagging, and all other devices necessary for checking, marking, establishing and maintaining lines, grades and layout to perform the work called for in the contract. The Contractor shall furnish competent personnel to perform the survey work and layout.

Traffic control devices and procedures for construction surveying shall be in accordance with the requirements of the MUTCD and associated ADOT Supplement.

Field books or other electronic data collection records used by the Contractor for recording survey data and field notes shall be available for inspection by the Department at any time and shall become the property of the Department upon completion of the work.

925-3 Construction Requirements:

925-3.01 General:

Prior to beginning any survey operations, the Contractor shall furnish to the Engineer, for approval, a written outline detailing the method of staking, marking of stakes, grade control for various courses of materials, referencing, structure control, pavement markings, and any other procedures and controls necessary for survey completion. A part of this outline shall also be a schedule which will show the sequencing of the survey and layout work, throughout the course of the contract, listing a percentage of completion for each month. Section 1150, Chapter 11 of the ADOT Construction Manual shall be used by the Contractor as a guide in the preparation of this outline. The ADOT Construction Manual is available on the Department's website, through the Construction and Materials Group.

When design survey is established and shown on project plans, the Department will provide a minimum of 3 control points within 1 mile of the project site, and centerline geometry information for the Contractor's use. Department furnished control points set in the field will be identified to the Contractor. On projects without design survey, the Department will identify record drawings from which the Contractor can establish construction survey.

The Contractor shall verify the accuracy of the control points established by the Department prior to use. The Contractor shall, as part of the control point verification process, locate and make ties to any section line, right-of-way, and roadway monuments which will be affected by the proposed work. After verification of these points, the Contractor shall notify the Department in writing of the results.

The Contractor shall establish an accurate construction centerline and bench marks for the proper layout of the work as described herein.

Traverse and control points established by the Contractor shall be provided to the Department as follows:

For horizontal control, the Contractor shall run a traverse from which construction centerline can be established. The control points, delineated by iron pins, marks in concrete, or similar devices, shall be located to minimize the likelihood of their destruction during construction activities. Coordinates of these points or ties to construction centerline shall be provided to the Department.

For vertical control, the Contractor shall establish bench marks for the entire length of the project at horizontal intervals not to exceed 2,500 feet.

Traverse or control points set by the Contractor shall be identified in the field to the Department.

When GPS is utilized, the Contractor will furnish the GPS localization results to the Department at least seven days before beginning construction layout survey work. The Engineer may order the GPS localization calibration and associated 3D model to be broken into two or more zones to maintain the localized relationship between control points and original ground.

The established initial right-of-way monuments shall be protected in place and re-established by the Contractor, if disturbed, at no additional cost to the Department.

For locating and establishing ties to section line, right-of-way, and roadway monuments, the Contractor shall follow the standards listed in Subsection 925-3.02(B).

Throughout the work, when design survey is established and shown on project plans, the Contractor shall set all stakes including centerline stakes; offset stakes; reference point stakes; slope stakes; pavement lines, curb lines and grade stakes; stakes for sewers, roadway drainage, pipe, under drains, clearing, paved gutter, guardrail, fence, survey monuments and culverts; blue tops for subgrade, subbase and base courses; control points for bridges, bridge piers, abutments, footings, pile cutoff, pile layout, pier caps, bridge seats, bridge beams, girder profiles and screed elevations; supplemental bench marks; permanent as-built elevation marks; and all other horizontal or vertical controls necessary for complete and accurate layout and construction of the work. Regardless of the staking method, construction stakes shall be marked in such a manner that all construction personnel can easily identify the stake location, elevation, and other appropriate information. The coordinates of any new control points established by the Contractor during the course of the work shall be given to the Engineer within five working days of control point establishment.

On surface treatment projects, and other projects without horizontal control, stakes indicating locations shall be placed every 500 feet, unless otherwise defined in the Special Provisions. Locations may be painted on the pavement in place of staking when approved by the Engineer.

If errors are discovered during the verification process, and control points do not agree with the geometrics shown in the plans, the Contractor shall promptly notify the Engineer in writing, and explain the problem in detail. The Engineer will advise the Contractor within five working days of any corrective actions which may be deemed necessary.

Directed changes to the work shall be reimbursed under Subsection 925-5 and additional contract time may be considered for any delays.

The Contractor shall be responsible for the proper layout and accuracy of all property markers which are required by the project plans.

Structure sites shall be accurately profiled and cross-sectioned, and structure control points shall be set and checked to assure the proper construction or installation of each structure. Profiles shall be approved by the Engineer prior to constructing or installing each structure. All profile survey data shall be entered in field books, or electronic reports satisfactory to the Engineer and preserved as a permanent project record.

The Contractor shall exercise care in the preservation of stakes, references and bench marks and shall reset them when any are damaged, lost, displaced or removed.

On all projects, the centerline layout for the final surface course shall be established by instrument survey by the Contractor and shall serve as marks for permanent traffic centerline striping. On projects requiring Contractor striping, the Contractor shall set points at intervals of not greater than 50 feet for each traffic lane at the beginning and ending of each yellow stripe, and at the beginning and ending of gores and tapers.

The Contractor shall also provide control points on the roadway, satisfactory to the Engineer, corresponding to the locations of all transition points for all lines of striping, including the beginnings, ends, breaks, and changes in the striping, including all tapers in the striping, and pavement edges when necessary to establish striping.

A minimum of two weeks prior to any paving activities, the Contractor, the Contractor’s surveyors, the pavement marking subContractor, and the Engineer shall meet to discuss the survey control for the applications of all temporary detour and permanent striping. At this meeting the Contractor shall provide a written plan, satisfactory to the Engineer, to provide survey control and layout of the temporary detour and permanent striping in a timely manner.

On projects that include no-passing zones, the Contractor shall also coordinate the survey layout of such zones with the ADOT No Passing Zone Crew. The Contractor shall contact the ADOT No Passing Zone Crew at the phone number provided on the project plans at least five working days before placement of the related pavement marking.

On projects where traffic is being carried through the work zone, pavements shall be marked for traffic centerline delineation before the end of each work shift. Temporary pavement markings shall conform with the requirements set forth under Subsection 701-3.05 of these specifications and any subsequent modifications thereto.

Any discrepancies in grade, alignment, earthwork quantities, locations or dimensions detected by the Contractor shall immediately be brought to the attention of the Engineer. No changes in the project plans will be allowed without the approval of the Engineer. Requests for verification of earthwork quantities shall be in accordance with Subsection 203-2.01.

The Department reserves the right to make inspections and random checks of any portion of the staking and layout work. If, in the Engineer's opinion, the work is not being performed in a manner that will assure proper controls and accuracy, the Engineer will order any or all of the staking and layout work redone at no additional cost to the Department.

If any portion of the Contractor's staking and layout work is ordered redone, resulting in additional rechecking by the Department, the Department shall be reimbursed for all costs for such additional checking. The amount of such costs will be deducted from the Contractor's monthly estimate.

Inspection of the Contractor's layout by the Engineer and the acceptance of all or any part of it shall not relieve the Contractor of its responsibility to secure the proper dimensions, grades and elevations.

925-3.02 Resetting Monuments:

(A) General:

The Contractor shall be responsible to maintain all existing monumentation, including section line, right-of-way, and roadway monumentation. Monumentation disturbed during construction shall be re-established by the Contractor, and recorded at the appropriate county recorder's office, at no additional cost to the Department.

(B) Monumentation Standards:

Section corner, quarter corner, and property corner monuments shall be re-established following the procedures in the Manual of Surveying Instructions 2009, published by the U.S. Department of the Interior, Bureau of Land Management, and all applicable statutes and requirements specified in the current Arizona State Board of Technical Registration's “Arizona Boundary Survey Minimum Standards.” The Contractor shall also follow the ADOT Right-of-Way Standards when re-establishing right-of-way monuments.

(C) Procedures:

Section line, right-of-way, and roadway monumentation re-established by the Contractor shall bear the registration number of the Land Surveyor in responsible charge of the location.

Monuments used to define section lines shall be stamped in accordance with Manual of Surveying Instructions 2009, published by the Department of Interior, Bureau of Land Management. Roadway monumentation shall be stamped in accordance with the requirements of the appropriate municipal jurisdiction. Right-of-way monuments shall be stamped in accordance with the ADOT Right-of-Way Standards.

Monuments that are re-established shall be recorded at the appropriate county recorder's office, and a copy of the Corner Recordation documentation shall be submitted to the Engineer within five working days of recordation.

925-3.03 Office Survey Work:

The Contractor shall be compensated for office work associated with project survey under the following circumstances:

(A) When the project plans fail to provide sufficient information to lay out the project or any part thereof.

(B) When the Contractor performs office survey work based on erroneous plans information which results in the duplication of work.

(C) If the Department should change any plans information for which the Contractor has already performed office work which results in the duplication of that work.

The Contractor shall not be due compensation for any office survey work that includes the following:

(A) When information provided in the plans is sufficiently complete and accurate to allow additional information necessary for the complete layout of the project to be routinely calculated.

(B) When the Contractor fails to inform the Engineer of discovered plan errors prior to the performance of extra office survey work.

The Contractor shall inform the Engineer in a timely manner of any omissions, ambiguities, or errors which the Contractor feels may result in extra office survey work, so as not to delay the project or create unnecessary calculations.

All office survey work shall be documented by the Contractor and verified by the Engineer for compensation. Documentation shall consist of at least a detailed office diary specifically addressing the work involved in the alleged problem area. The Contractor may be required to provide the calculations, charts, graphs, drawings, or other physical evidence which verifies the extra work.

925-3.04 Survey Manager:

The Contractor shall be compensated for a survey manager when deemed necessary for extra work ordered by the Engineer. The use of a survey manager, along with all survey manager duties required as a result of the additional work, must be authorized in advance by the Engineer. The survey manager shall be a Registered Land Surveyor in the State of Arizona.

925-4 Method of Measurement:

Construction surveying and layout will be measured on a lump sum basis.

One-, two-, and three- person survey parties, survey managers, and office survey technicians will be measured by the hour to the nearest half hour.

925-5 Basis of Payment:

Payment for construction surveying and layout will be made at the contract lump sum price and will be made as follows:

The approved schedule showing the sequencing and percentage of the survey and layout work, as submitted under Subsection 925-3.01, shall be the basis on which monthly progress payments shall be made. This schedule shall be subject to periodic review, at the request of the Contractor or the Department, if the survey and layout work lags or accelerates. If necessary the schedule will be revised to reflect changes in survey and layout progress. When approved by the Engineer, the revised schedule will become the basis of payment.

If additional staking and layout are required as a result of additional work ordered by the Engineer, such work will be paid under items listed in the table below.

ITEM	PREDETERMINED RATE
9250101-ONE-PERSON SURVEY PARTY	$110 per hour
9250102-TWO-PERSON SURVEY PARTY	$150 per hour
9250103-THREE-PERSON SURVEY PARTY	$190 per hour
9250106-SURVEY MANAGER	$175 per hour
9250105–OFFICE SURVEY TECHNICIAN	$85 per hour

Payment will be made at the respective predetermined unit prices listed in the table above. No additional payment will be made for overtime hours. Should such additional work require the Contractor to pay travel and subsistence costs for the survey party or survey parties utilized, payment for travel and subsistence will be made under the provisions of Subsection 109.04, except that no mark-up will be allowed for profit and overhead. The Engineer will determine whether the additional work shall be performed by the Contractor or by Department forces.

The amount per hour for a one-person, two-person, or three-person survey party includes the cost of all work necessary to complete the extra work.

Traffic control and flagging, including any necessary because of the additional staking and layout required as a result of extra work ordered by the Engineer, or additional work resulting from contract expansion and ordered by the Engineer, shall conform to the requirements of Section-701, Maintenance and Protection of Traffic, and will be measured and paid under the respective contract items.

No payment will be made for the resetting of stakes, references, bench marks, and other survey control unless directed by the Engineer.

The amount per hour for a survey manager and an office survey technician shall include all necessary office supplies and equipment.

Unless otherwise directed by the Engineer, requests for payment for additional survey work performed shall be submitted prior to the end of the monthly estimate billing period during which the work is performed.

SECTION 1003 REINFORCING STEEL

Reinforcing Steel shall be in accordance with Section 1003 of the ADOT Standard Specifications except as modified herein.

1003-1 **General Requirements:** the first paragraph of the ADOT Standard Specifications is revised to read:

Reinforcing steel shall be furnished in the sizes, shapes, and lengths shown on the plans and in conformance with the requirements of the specifications.

Certificates of Compliance conforming to the requirements of Subsection 106.05 shall be submitted for epoxy coated reinforcing bars, as well as uncoated reinforcing bars, wire, and welded wire fabric. In addition, for epoxy coated reinforcing bars, Certificates of Compliance shall

be required from the coating manufacturer and Certificates of Analysis shall be required from the coating applicator.

1003-2 **Reinforcing Bars:** the first paragraph of the ADOT Standard Specifications is revised to read:

Except when used for wire ties or spirals, steel bars used as reinforcement in concrete shall be deformed and shall conform to the requirements of ASTM A 615. Unless otherwise specified, steel bars meeting the requirements of ASTM A 706 may be substituted for ASTM A 615 steel bars. When ASTM A 706 bars are used, tack welding of the reinforcement will not be permitted unless approved in writing by the Engineer.

1003-3 **Wire:** of the ADOT Standard Specifications is revised to read:

Steel wire used as spirals or ties for reinforcement in concrete shall conform to the requirements of ASTM A 82.

1003-5.02 **Epoxy for Coating:** the first paragraph of the ADOT Standard Specifications is revised to read:

A list of powdered epoxy resins which have passed prequalification tests, as described in ASTM A 775, “Epoxy-Coated Steel Reinforcing Bars”, and which may be used if the material is applied and cured in the same manner as that used to coat the test bars in the original powder prequalification test may be found on the Department’s Approved Products List. Copies of the most current version are available on the internet from the ADOT Research Center through its Product Evaluation Program.

1003-5.02 **Epoxy for Coating:** the fifth paragraph of the ADOT Standard Specifications is revised to read:

The Contractor shall furnish a Certificate of Compliance from the coating manufacturer, conforming to the requirements of Subsection 106.05. The Certificate of Compliance shall properly identify the batch and/or lot number, material, quantity of batch, date of manufacture, name and address of manufacturer, and a statement that the material is the same composition as the initial sample prequalified for use. The certificate shall also state that production bars and prequalification bars have been identically prepared and applied with epoxy powders.

1003-5.03 **Application of Coating:** the second paragraph of the ADOT Standard Specifications is revised to read:

The surface to be coated shall be blast cleaned in accordance with the requirements of the Society for Protective Coatings, Surface Preparation Standard SSPC-SP10, Near White Blast Cleaning.

1003-5.03 **Application of Coating:** the fifth paragraph of the ADOT Standard Specifications is revised to read:

The epoxy coating shall be applied as a smooth uniform coat. After curing, the coating thickness shall be ten ± two mils. Coating thickness shall be controlled by taking measurements on a representative number of bars from each production lot. Coating thickness measurements shall

be conducted by the method outlined in the Society for Protective Coatings Paint Application Standard SSPC-PA2.

1003-5.03 **Application of Coating:** the ninth and tenth paragraphs of the ADOT Standard Specifications are revised to read:

The Contractor shall furnish a Certificate of Analysis from the coating applicator, conforming to the requirements of Subsection 106.05, with each shipment of coated steel. In addition to the requirements of Subsection 106.05, the Certificate of Analysis shall state that the coated items and coating material have been tested in accordance with the requirements of this subsection and that the entire lot is in a fully-cured condition.

The coating applicator shall be responsible for performing quality control and tests. This will include inspection and testing to determine compliance with the requirements of this subsection for the coating thickness, continuity of coating, coating cure, and flexibility of coating.

SECTION 1005 BITUMINOUS MATERIALS

Bituminous materials shall be in accordance with Section 1005 of the ADOT Standard Specifications except as modified herein.

1005-2 **Sampling of Bituminous Material:** the first sentence of the first paragraph of the Standard Specifications is revised to read:

Sampling of bituminous material shall conform to the requirements of Arizona Test Method 103.

1005-3.01 **Asphalt Cement:** the second paragraph of the Standard Specifications is revised to read:

If PG 76-22 TR+ asphalt binder is used, it shall conform to the requirements of Table 1005-1a.

If PG 70-22 TR+ asphalt binder is used, it shall conform to the requirements of Table 1005-1b.

If PG 64-28 TR+ asphalt binder is used, it shall conform to the requirements of Table 1005-1c.

1005-3.01 **Asphalt Cement:** the third paragraph of the Standard Specifications is hereby deleted:

1005-3.04 **Emulsified Asphalt (Special Type):** of the Standard Specifications is revised to read:

Emulsified asphalt (special type) shall consist of Type SS-1 or CSS-1 diluted with water to provide an asphalt content not less than 26 percent. The water used must be potable. The material shall not be diluted in the field.

TABLE 1005-1: "Creep Stiffness of PAV Binder" in Table 1005-1 of the Standard Specifications is revised to read:

TABLE 1005-1 ASPHALT BINDER ADJUSTMENT TABLE			
Test Property	AASHTO Test Method	Test Result	Percent of Contract Unit Price Allowed
Creep Stiffness of PAV Binder: S, MPa	T 313	≤ 300 301-330 331-450 451-600 > 600	100 95 85 75 65 (1)

TABLE 1005-1b: **PG 70-22 TR+ ASPHALT BINDER** is hereby added to the Standard Specifications:

TABLE 1005-1b PG 70-22 TR+ ASPHALT BINDER				
Test Property	Test Method	Requirement	Test Result	Percent of Contract Unit Price Allowed
Solubility in Trichloroethylene, %, minimum	ASTM D 2042	97.5	------	------
Softening Point, °C, minimum	AASHTO T 53	54	≥ 54 51 - 53 < 51	100 85 70 (1)
Elastic Recovery, @ 10 °C, %, Minimum	AASHTO T 301	55	≥ 55 50 - 54 < 50	100 85 70 (1)
Phase Angle (δ), @ 70 °C @ 10 rad/sec, degrees, maximum	AASHTO T 315	75	≤ 75 76 - 83 > 83	100 85 65 (1)
(1) Reject Status: The pay adjustment applies if allowed to remain in place.				
Notes:				

PG 70-22 TR+ asphalt binder shall contain a minimum of 8 percent crumb rubber and a minimum of two percent SBS (styrene-butadiene-styrene) polymer.

PG 70-22 TR+ asphalt binder shall conform to the requirements of AASHTO M 320 and, in addition, shall meet the requirements specified above.

Table 1005-1 will also apply for PG 70-22 TR+ asphalt binder.

Should the bituminous material be deficient on more than one of the properties listed in Tables 1005-1 and 1005-1b, the pay adjustment will be the greatest reduction to the contract unit price specified considering individual test results.

The pressure aging temperature for PG 70-22 TR+ asphalt binder shall be 110 °C.

The crumb rubber shall be derived from processing whole scrap tires or shredded tire materials. The tires from which the crumb rubber is produced shall be taken from automobiles, trucks, or other equipment owned and operated in the United States. The processing shall not produce, as a waste product, casings or other round tire material that can hold water when stored or disposed of above ground.

TABLE 1005-1c: PG 64-28 TR+ ASPHALT BINDER is hereby added to the Standard Specifications:

TABLE 1005-1c
PG 64-28 TR+ ASPHALT BINDER

Test Property	Test Method	Requirement	Test Result	Percent of Contract Unit Price Allowed
Solubility in Trichloroethylene, %, minimum	ASTM D 2042	97.5	-----	-----
Softening Point, °C, minimum	AASHTO T 53	50	≥ 50 47 - 49 < 47	100 85 70 (1)
Elastic Recovery, @ 10 °C, %, Minimum	AASHTO T 301	55	≥ 55 50 - 54 < 50	100 85 70 (1)
Phase Angle (δ), @ 64 °C @ 10 rad/sec, degrees, maximum	AASHTO T 315	75	≤ 75 76 - 83 > 83	100 85 65 (1)
(1) Reject Status: The pay adjustment applies if allowed to remain in place.				
Notes:				

PG 64-28 TR+ asphalt binder shall contain a minimum of 8% crumb rubber and a minimum of two percent SBS (styrene-butadiene-styrene) polymer.

PG 64-28 TR+ asphalt binder shall conform to the requirements of AASHTO M 320 and, in addition, shall meet the requirements specified above.

Table 1005-1 will also apply for PG 64-28 TR+ asphalt binder.

Should the bituminous material be deficient on more than one of the properties listed in Tables 1005-1 and 1005-1c, the pay adjustment will be the greatest reduction to the contract unit price specified considering individual test results.

The pressure aging temperature for PG 64-28 TR+ asphalt binder shall be 100 °C.

The crumb rubber shall be derived from processing whole scrap tires or shredded tire materials. The tires from which the crumb rubber is produced shall be taken from automobiles, trucks, or other equipment owned and operated in the United States. The processing shall not produce, as a waste product, casings or other round tire material that can hold water when stored or disposed of above ground.

TABLE 1005-3a: "Elastic Recovery by means of Ductilometer" is revised and "Note 2" is added in Table 1005-3a of the Standard Specifications:

TABLE 1005-3a
POLYMERIZED CATIONIC RAPID SET (CRS-2P)
EMULSIFIED ASPHALT (1)

Tests on Emulsion:	Test Method	Requirement
Elastic Recovery by means of Ductilometer, 25 ºC (77 ºF), % minimum	AASHTO T 301 (2)	55

(2) Testing shall be performed on residue by distillation, not on residue by oven evaporation.

TABLE 1005-3b: "Elastic Recovery by means of Ductilometer" is revised and "Note 3" is added in Table 1005-3b of the Standard Specifications:

TABLE 1005-3b
POLYMERIZED HIGH FLOAT EMULSIFIED ASPHALT (1)

Tests on Emulsion:	Test Method	Requirement	
		HFE-150P	HFE-300P
Elastic Recovery by means of Ductilometer, 4 ºC (39.2 ºF), % minimum	AASHTO T 301 (3)	25	25

(3) Testing shall be performed on residue by distillation, not on residue by oven evaporation.

TABLE 1005-6: PG 70-22 TR+ and PG 64-28 TR+ are added to "Paving Asphalt" in Table 1005-6 of the Standard Specifications:

TABLE 1005-6 OTHER REQUIREMENTS			
Grade of Asphalt Specification Designation	Range of Temperatures for Application by Spraying, °F (Not applicable for Plant Mixing)	Range of Aggregate Temperatures for Plant Mixing, °F	Basis of Conversion, Average Gallons Per Ton at 60 °F
Paving Asphalt	275 - 400	------	
PG 76-XX			232
PG 70-XX			233
PG 64-XX			235
PG 58-XX			236
PG 52-XX			238
PG 76-22 TR+			229
PG 70-22 TR+			230
PG 64-28 TR+			231

SECTION 1006 PORTLAND CEMENT CONCRETE

Portland Cement Concrete shall be in accordance with Section 1006 of the ADOT Standard Specifications except as modified herein.

1006-1 **General Requirements:** of the ADOT Standard Specifications is revised to read:

Portland cement concrete shall consist of a mixture of hydraulic cement, fine aggregate, coarse aggregate, and water. It may also contain air-entraining admixtures, chemical admixtures, and supplementary cementitious materials.

The Contractor shall determine the mix proportions and shall furnish concrete which conforms to the requirements of the specifications. All concrete shall be sufficiently workable, at the slump proposed by the Contractor within the specified range, to allow proper placement of the concrete without harmful segregation, bleeding, or incomplete consolidation. It shall be the responsibility of the Contractor to proportion, mix, place, finish, and cure the concrete properly in accordance with the requirements of the specifications.

1006-2.01 **Hydraulic Cement:** the second through the fifth paragraphs of the ADOT Standard Specifications are revised to read:

Portland cement shall conform to the requirements of ASTM C 150 for Type II, III, or V, and shall be low alkali cement containing not more than 0.60 percent total alkali (Na_2O equivalent).

Portland-pozzolan cement shall conform to the requirements of ASTM C 595 for blended hydraulic cement with moderate sulfate resistance, Type IP (MS).

Cementitious material is defined as an inorganic material or a mixture of inorganic materials that sets and develops strength by chemical reaction with water by formation of hydrates and is capable of doing so under water. In this specification, cementitious materials are defined as: hydraulic cement (Portland cement or Portland-pozzolan cement) and supplementary cementitious material (Fly Ash, Natural Pozzolan, or Silica Fume).

Hydraulic cement shall be approved prior to its use in accordance with ADOT Materials Policy and Procedure Directive No. 13, "Certification and Acceptance of Hydraulic Cement, Fly Ash, Natural Pozzolan, Silica Fume, and Lime".

1006-2.02 **Water:** the first sentence of the first paragraph of the ADOT Standard Specifications is revised to read:

The water used shall be free of injurious amounts of oil, acid, alkali, clay, vegetable matter, silt, or other harmful matter.

1006-2.03(A) **General Requirements:** the first paragraph of the ADOT Standard Specifications is revised to read:

When concrete is to be placed at elevations above 4,500 feet, the fine aggregate and the coarse aggregate shall be subjected to five cycles of the sodium sulfate soundness test, and the weighted percentage loss determined separately for each, in accordance with the requirements of AASHTO T 104. The weighted percentage loss determined for each shall not exceed 10 percent. Tests for soundness may be waived when aggregates from the same source have been approved and the approved test results apply to the current production from that source.

1006-2.03(A) **General Requirements:** the second paragraph of the ADOT Standard Specifications is hereby deleted:

1006-2.03(A) **General Requirements:** the fifth paragraph of the ADOT Standard Specifications is revised to read:

When aggregates are stored on the ground, the sites for the stockpiles shall be level and clear of all vegetation. The bottom one-foot layer of aggregate shall not be disturbed or used.

1006-2.03(A) **General Requirements:** "Lightweight particles" in the table of the ninth paragraph of the ADOT Standard Specifications is revised to read:

Lightweight particles (Specific gravity less than 2.0)	AASHTO T 113 (See Note)

1006-2.03(B) **Fine Aggregate:** "Lightweight particles" in the table of the second paragraph of the ADOT Standard Specifications is revised to read:

Lightweight particles (Specific gravity less than 2.0)	AASHTO T 113 (Except that the percent of lightweight particles shall be reported to the nearest 0.01%.)	1.25% (0.25% Max. Coal and Lignite*)

1006-2.03(B) **Fine Aggregate:** the last paragraph of the ADOT Standard Specifications is revised to read:

Fine aggregate shall be made into mortar and subjected to testing under AASHTO T 71, except that the mortar shall develop a compressive strength at seven and 28 days of not less than 90 percent of that developed by a mortar prepared in the same manner with the same Type II cement and graded sand conforming to the requirements of ASTM C 778.

1006-2.03(C) **Coarse Aggregate:** "Lightweight particles" in the table of the second paragraph of the ADOT Standard Specifications is revised to read:

Lightweight particles (Specific gravity less than 2.0)	AASHTO T 113 (Except that the percent of lightweight particles shall be reported to the nearest 0.01%.)	1.25% (0.25% Max. Coal and Lignite*)

1006-2.04(A) **General Requirements:** the first paragraph of the ADOT Standard Specifications is hereby deleted.

1006-2.04(B) **Air-Entraining Admixtures:** the first paragraph of the ADOT Standard Specifications is revised to read:

Air-entraining admixtures shall conform to the requirements of ASTM C 260.

Air-entraining admixtures shall be approved prior to their use in accordance with ADOT Materials Policy and Procedure Directive No. 2, "Certification and Acceptance of Chemical and Air-Entraining Admixtures for Portland Cement Concrete".

1006-2.04(C) **Chemical Admixtures:** the first paragraph of the ADOT Standard Specifications is revised to read:

Chemical admixtures shall conform to the requirements of ASTM C 494.

Chemical admixtures shall be approved prior to their use in accordance with ADOT Materials Policy and Procedure Directive No. 2, "Certification and Acceptance of Chemical and Air-Entraining Admixtures for Portland Cement Concrete".

1006-2.04(D) **Supplementary Cementitious Material (Fly Ash, Natural Pozzolan, and Silica Fume):** the first paragraph of the ADOT Standard Specifications is revised to read:

Supplementary cementitious materials may be used in addition to hydraulic cement. Supplementary cementitious materials shall be approved prior to their use in accordance with ADOT Materials Policy and Procedure Directive No. 13, "Certification and Acceptance of Hydraulic Cement, Fly Ash, Natural Pozzolan, Silica Fume, and Lime".

1006-2.04(D) **Supplementary Cementitious Material (Fly Ash, Natural Pozzolan, and Silica Fume):** the last two paragraphs of the ADOT Standard Specifications are revised to read:

When a supplementary cementitious material with a calcium oxide content greater than 15 percent is proposed, the hydraulic cement/supplementary cementitious material blend shall be tested for sulfate expansion in accordance with ASTM C 1012. The maximum expansion shall be 0.10 percent at six months.

When either moderate or high sulfate resistant concrete is specified in the Special Provisions, the proposed hydraulic cement/supplementary cementitious material blend shall be tested for sulfate expansion in accordance with ASTM C 1012. When moderate sulfate resistance is specified, the maximum expansion shall be 0.10 percent at six months. When high sulfate resistance is specified, the maximum expansion shall be 0.05 percent at six months or 0.10 percent at one year.

1006-2.05 **Concrete Curing Materials:** the second paragraph of the ADOT Standard Specifications is revised to read:

Acceptance of concrete curing materials shall be as specified in ADOT Materials Policy and Procedure Directive No. 3, "Curing Compounds".

1006-3.01 **Design Criteria:** Table 1006-A of the ADOT Standard Specifications is revised to read:

TABLE 1006-A

Class of Concrete	**Minimum 28-Day Compressive Strength Required: psi** (See Note 1)	**Cementitious Material Content: Lbs per Cu Yd Minimum - Maximum** (See Notes 2, 3, and 4)	**Maximum Water/Cementitious Material Ratio (w/cm): Lb./Lb.**	**Slump Range: Inches**
B	2,500	470 - 658	None	(See Note 6)
S	2,500	520 - 752	0.55	
	3,000			

	(See Note 5)			
	3,500			
	4,000			
	4,500	564 - 752	0.50	
	Greater than 4,500	564 - 800	0.45	
P	4,000	564 - 658	None	0 - 4.5
H	High performance concrete as specified in project special provisions.			

Note 1: Testing for compressive strength of cylinders for all classes of concrete shall be in accordance with the requirements of Arizona Test Method 314.

Note 2: A supplementary cementitious material (fly ash, natural pozzolan, or silica fume) conforming to the requirements of Subsection 1006-2.04(D) may be used, as specified in paragraphs (a) through (f) below.

(a) When Portland cement is used, a maximum of 25 percent, by weight of the cementitious material, may be an approved fly ash or natural pozzolan, except as specified in paragraphs (d), (e), and (f) below.

(b) When Portland-pozzolan cement [Type IP (MS)] is used, fly ash or natural pozzolan is not allowed, except as specified in paragraphs (d), (e), and (f) below.

(c) When silica fume is used, a maximum of 10 percent, by weight of either Portland cement or Portland-pozzolan cement, may be used.

(d) When a compressive strength greater than 4,500 psi is required, supplementary cementitious material may be added in excess of the maximum cementitious material content. Fly ash or natural pozzolan may exceed 25 percent, by weight of the cementitious material, if approved by the Engineer.

(e) When increased sulfate resistance is specified, the required amount of fly ash or natural pozzolan shall be incorporated into the concrete and may exceed 25 percent, by weight of the cementitious material.

(f) For Class S concrete used in bridge decks, a minimum of 20 percent, by weight of the cementitious material, must be an approved Class F fly ash or natural pozzolan, unless otherwise approved by the Engineer.

Note 3: For any concrete mix, other than for precast and/or prestressed bridge members, with a Portland cement content greater than 545 pounds per cubic yard, one of the options specified in paragraphs (a) through (e) below for the mitigation of a potential alkali silica reaction (ASR) shall be used:

(a) A minimum of 20 percent Class F fly ash or natural pozzolan, by weight of the cementitious material, shall be used. The Class F fly ash or natural pozzolan shall have a calcium oxide content of 15 percent or less.

(b) Instead of using Portland cement, Type IP (MS) Portland-pozzolan cement with a Class F fly ash or natural pozzolan content of at least 20 percent, by weight of the cementitious material, shall be used. The Class F fly ash or natural pozzolan shall have a calcium oxide content of 15 percent or less.

(c) Limit the total alkali (Na_2O equivalent) to a maximum of 3.00 pounds per cubic yard of concrete, when calculated as follows:

$$\begin{bmatrix}\text{Pounds of total}\\ \text{alkali per cubic}\\ \text{yard of concrete}\end{bmatrix} = \frac{\begin{pmatrix}\text{Pounds of Portland}\\ \text{cement per cubic}\\ \text{yard of concrete}\end{pmatrix} \text{ x } \begin{pmatrix}\text{Na}_2\text{O equivalent (\%)}\\ \text{in Portand cement}\end{pmatrix}}{100}$$

(d) Introduce a lithium nitrate admixture, which has been approved by the Engineer, at a minimum dosage of 0.55 gallons of 30 percent lithium nitrate solution per pound of total alkali (Na_2O equivalent) per cubic yard of concrete. The required amount of lithium nitrate is calculated as follows:

$$\begin{bmatrix}\text{Required gallons}\\ \text{of 30 percent}\\ \text{lithium nitrate}\\ \text{solution}\end{bmatrix} = \frac{\begin{pmatrix}\text{Pounds of}\\ \text{Portland cement}\\ \text{per cubic yard}\\ \text{of concrete}\end{pmatrix} \text{ x } \begin{pmatrix}\text{Na}_2\text{O equivalent (\%)}\\ \text{in Portand cement}\end{pmatrix}}{100} \text{ x } (0.55)$$

(e) The coarse aggregate and the fine aggregate shall be tested separately in accordance with ASTM C 1260 to determine the potential for alkali silica reaction (ASR). When aggregates show the potential for ASR, as indicated by expansions of 0.10% or greater at 16 days after casting, sufficient mitigation for the expansion shall be determined in accordance with ASTM C 1567. The use of fly ash or natural pozzolan may exceed 25 percent, by weight of the cementitious material.

Note 4: Unless otherwise specified, the cementitious material content shall be as shown.

Note 5: Unless otherwise shown on the plans.

Note 6: The proposed slump shall be chosen by the Contractor. Concrete at the proposed slump shall be sufficiently workable to allow proper placement without harmful segregation, bleeding, or incomplete consolidation.

1006-3.01 **Design Criteria:** the second, third, and fourth paragraphs of the ADOT Standard Specifications are revised to read:

Air-entraining admixtures will be required for all classes of concrete placed at an elevation of 3,000 feet or above. The air content of the concrete mixture at the point of placement shall not be less than four percent nor more than seven percent by volume. Where freeze-thaw durability is of concern (such as in bridge decks, overlays, approach slabs, and barrier walls) and the potential for air loss is expected during placement, the range for acceptable air content, when sampled at the truck in accordance with Subsection 1006-7.02, shall be increased to not less than five percent nor more than eight percent. However, no air-entrainment will be required for minor precast structures, precast pipe, and precast, prestressed structural members supporting a concrete deck slab or impervious overlay. Also, no air-entrainment will be required for any precast items constructed using the dry pack or no-slump method.

For elevations below 3,000 feet, air-entraining admixtures may be used at the option of the Contractor. If air-entraining admixtures are used, the air content of the concrete mixture at the point of placement shall not exceed seven percent by volume.

Concrete that fails to conform to the air content requirements listed above for the respective elevation as determined by the Engineer, shall be rejected prior to placement.

1006-3.01 **Design Criteria:** the first and second sentences of the sixth paragraph of the ADOT Standard Specifications are revised to read:

The coarse aggregate size designation for Class S or Class B concrete shall be chosen by the Contractor and approved by the Engineer and shall conform to the size designation and grading requirements of AASHTO M 43. In choosing the size designation, the maximum size of coarse aggregate shall not be larger than one fifth of the narrowest dimension between the sides of adjacent forms, or two thirds of the minimum clear spacing between reinforcing bars, or two thirds of the minimum clear spacing between reinforcing bars and the sides of adjacent forms, or one third of the depth of the slab, whichever is least.

1006-3.01 **Design Criteria:** the first sentence of the seventh paragraph of the ADOT Standard Specifications is revised to read:

Coarse aggregate for Class P concrete used to construct Portland cement concrete pavement without load transfer dowels shall be separated into two or more stockpiles.

1006-3.02 **Design Procedures:** the first paragraph of the ADOT Standard Specifications is revised to read:

At least two weeks prior to the appropriate concreting operation, the Contractor shall furnish a mix design for each class of concrete and each strength of Class S concrete for review and approval. More than one mix design for each class of concrete and each strength of Class S concrete may be submitted for approval provided specific items and locations of intended uses accompany the mix design. The Contractor shall substantiate each mix design by furnishing test data and providing all details of the mixtures proposed for use. Mix designs, for other than precast or prestressed concrete, shall be prepared by or under the direction of, and signed by, a registered professional engineer, a NICET Level III or higher certified technician in the concrete subfield, a NRMCA Level 3 Certified Concrete Technologist, or an ACI certified Concrete Laboratory Testing Technician Level 2 or Grade II. Mix designs for precast or prestressed concrete shall be prepared by or under the direct supervision of, and signed by, either one of the individuals listed above or

a PCI Quality Control Technician/Inspector Level II or higher. Individuals preparing and submitting mix designs shall have experience in the development of mix designs and mix design testing for the respective type of concrete.

1006-3.02 **Design Procedures:** the second and third paragraphs of the ADOT Standard Specifications are revised to read:

The complete solid volume mix designs submitted for approval shall include all weights and volumes of all ingredients. The brand, type, and source of hydraulic cement and admixtures, the coarse aggregate size number designation, source of aggregates, the specific gravities of all ingredients, the proposed slump, the water/cementitious material ratio, a product code to identify the mix design, and the intended use of each mix design shall be an integral part of each mix design.

The use of new and previously used mix designs, and the requirements for trial batches, will be as required by ADOT Materials Policy and Procedure Directive No. 15, “Submittal and Approval of Portland Cement Concrete Mix Designs”.

1006-4.01 **General Requirements:** of the ADOT Standard Specifications is revised to read:

The Contractor may obtain concrete for each class of concrete and for each strength of Class S concrete from a source approved by the Engineer in lieu of establishing a batch plant at the project site.

For each class of concrete and each strength of Class S concrete, except for Class P concrete produced in a batch plant at the site and used exclusively for Class P work, the Contractor shall furnish a delivery ticket for each batch of concrete. The minimum information to be shown on each delivery ticket shall be the date, time batched, truck identification number, name or identification of batch plant, name of Contractor, name and location of project, the quantity of concrete, the batch weights/volumes or mix design product code, the amount of permissible additional water to meet the design water/cementitious material ratio, and the number of revolutions that the concrete has been mixed at mixing speed in a truck mixer. An authorized representative of the Contractor shall be responsible for each delivery ticket and shall sign each delivery ticket accepting the Contractor's responsibility for the concrete. The representative shall immediately furnish the delivery ticket to the Engineer.

When requested by the Engineer, the Contractor shall supply a separate record for each batch of concrete which shows the batch weight/volume of each individual ingredient.

1006-4.02(A) **Hydraulic Cement:** the last sentence of the first paragraph of the ADOT Standard Specifications is hereby deleted:

1006-4.03(A) **General Requirements:** the last sentence of the first paragraph of the ADOT Standard Specifications is revised to read:

Concrete may be mixed in a mobile mixer at the site for Class S or Class B concrete, provided written permission of the Engineer is granted.

1006-4.03(B) **Mixing in a Stationary Mixer:** the last sentence of the third paragraph of the ADOT Standard Specifications is revised to read:

The mixing time shall be not less than 60 seconds for one cubic yard and shall be increased 15 seconds for each additional cubic yard or fraction thereof for Class S or Class B concrete.

1006-4.03(C) **Mixing in Truck Mixers:** the first sentence of the last paragraph of the ADOT Standard Specifications is revised to read:

If additional mixing water is required to maintain the mix design water/cementitious material ratio, the concrete shall be mixed by a minimum of 30 revolutions of the drum at mixing speed after the water has been added, prior to discharge of any concrete for placement.

1006-4.03(D) **Mixing in Mobile Mixers:** of the ADOT Standard Specifications is revised to read:

Concrete mixing in mobile mixers for Class S or Class B concrete shall be performed in accordance with the requirements of AASHTO M 241.

1006-4.04 **Consistency:** the second paragraph of the ADOT Standard Specifications is revised to read:

The Contractor shall furnish Class S and Class B concrete having the slump shown on the approved mix design, with a permissible variation of ± one inch when the slump shown on the approved mix design is four inches or less, and a permissible variation of ± 1½ inches when the slump shown on the approved mix design is greater than four inches. However, when an approved high range water reducing chemical admixture (ASTM C 494, Type F or Type G) conforming to the requirements of Subsection 1006-2.04 is used, the permissible variation will be ± two inches, regardless of the slump shown on the approved mix design.

1006-5 **Weather Limitations:** the title of the ADOT Standard Specifications is revised to read:

1006-5 **Concrete Temperature and Weather Limitations:**

1006-5.01 **General Requirements:** of the ADOT Standard Specifications is revised to read:

The temperature of the concrete mixture immediately before placement shall not be less than 50 degrees F nor greater than 90 degrees F. Concrete that fails to conform to this temperature requirement shall be rejected prior to placement.

Under rainy conditions, placing of concrete shall be stopped before the quantity of surface water is sufficient to cause a flow or wash of the concrete surface or have a detrimental effect on the finished concrete and acceptance parameters.

Placing of concrete shall immediately cease if the hauling vehicles or any equipment or pedestrian traffic tracks mud on the prepared base or changes the allowable subgrade dimensional tolerances for Class P concrete and slabs placed on subgrade for Class S or Class B concrete.

1006-5.02 **Hot Weather Concreting:** of the ADOT Standard Specifications is revised to read:

Forms, subgrade, and reinforcing steel shall be sprinkled with cool water just prior to the placement of concrete.

Mix water may be cooled by refrigeration, liquid nitrogen, or well-crushed ice of a size that will melt completely during the mixing operation. If crushed ice is used, it shall be substituted for part of the mix water on a pound for pound basis.

1006-5.03 **Cold Weather Concreting:** of the ADOT Standard Specifications is revised to read:

Concrete shall not be placed on or against ice-coated forms, reinforcing steel, structural steel, conduits, or construction joints; nor on or against snow, ice, or frozen earth materials. Immediately prior to placing concrete, the temperature of forms, reinforcing steel, earthen material, or any other material that will come in contact with the freshly placed concrete shall be a minimum temperature of 40 degrees F. If artificial heat is used to adjust the temperature of the items that will come in contact with the freshly mixed concrete, the temperature of these items shall not exceed 10 degrees F greater than that of the concrete being placed.

Concrete operations shall be discontinued when a descending ambient temperature in the shade and away from artificial heat falls below 40 degrees F. Concrete operations shall not be resumed until an ascending ambient temperature in the shade and away from artificial heat exceeds 35 degrees F unless otherwise approved by the Engineer.

Mixing and placing concrete shall continue no later in any day than that time which will allow sufficient time to place and protect the concrete already poured before the ambient temperature drops to 35 degrees F.

Concrete shall be protected in a manner to maintain all concrete surface temperatures at not less than 50 degrees F for a period of 72 hours after placement and at not less than 40 degrees F for an additional 96 hours.

The Contractor may use equipment to heat the aggregates or water, or both, prior to mixing. If aggregates are heated, the minimum temperature of the heated aggregate shall be 60 degrees F and the aggregates shall have no chunks of ice or frozen aggregate present. Equipment used to heat the aggregates shall be such that consistent temperatures are obtained throughout the aggregate within each batch and from one batch to another. Water shall not be heated in excess of 150 degrees F unless the water is mixed with the aggregate prior to the addition of cement to the batch. During the heating or mixing process, cement shall not be added to water and aggregate combinations which exceed 100 degrees F.

When weather forecasts indicate a probability that ambient temperatures will fall below 35 degrees F during the placement or curing periods, the Contractor shall submit a cold weather concreting plan to the Engineer for approval prior to concrete placement. The cold weather concreting plan shall detail methods and equipment which will be used to ensure that the required concrete temperatures are maintained. The Contractor shall provide adequate cold weather protection in the form of insulation and/or heated enclosures to protect the concrete after placement. For bridge decks and suspended structures, the cold weather concreting plan shall

include protection measures for both the top and bottom surfaces of the concrete. This protection shall maintain concrete surface temperatures as specified above at all locations in the structure. When artificial heating is required, the heating units shall not locally heat or dry the surface of the concrete.

When a cold weather concreting plan is required, the Engineer may require concrete temperatures to be measured and continuously recorded by the use of temperature sensing devices during the entire curing period. The Contractor shall provide the temperature sensing devices and recording instruments. The Contractor shall install temperature sensing devices near the surface of the concrete at locations and depths designated by the Engineer. When concrete is placed on a bridge deck or suspended structure, both the bottom surface and the top surface shall be monitored with temperature sensing devices. Temperature sensing devices and recording instruments shall be approved by the Engineer. The Contractor shall continuously monitor the concrete temperature and provide the recorded data to the Engineer at any time upon request.

If the surface concrete temperature at any location in the structure falls below 35 degrees F during the curing period, the Engineer may direct the Contractor to core the areas in question at the locations indicated by the Engineer. The Contractor shall submit the cores to a petrographer for examination in accordance with ASTM C 856. Concrete damaged by frost, as determined by the petrographer, shall be removed and replaced at no additional cost to the Department. All costs associated with coring, transmittal of cores, and petrographic examination shall be borne by the Contractor regardless of the outcome of the petrographic examination.

The placing of concrete will not be permitted until the Engineer is satisfied that all the necessary protection equipment and materials are on hand at the site and in satisfactory working condition.

Concrete requiring cold weather protection shall have such protection removed at the end of the required curing period in such a manner that will permit a gradual drop in the concrete temperatures.

1006-7.01 **General:** the second paragraph of the ADOT Standard Specifications is revised to read:

Rejection of concrete will also occur due to insufficient compressive strength. Concrete compressive strength requirements consist of the specified strength which the concrete shall attain before various loads or stresses are applied and a minimum strength at 28 days.

1006-7.01 **General:** the last sentence of the third paragraph of the ADOT Standard Specifications is revised to read:

Sampling and testing for compressive strength will be performed on all classes of concrete furnished, including each strength specified on the project plans for Class S concrete.

1006-7.02 **Sampling and Testing of Concrete:** the first sentence of item (1) of the second paragraph of the ADOT Standard Specifications is revised to read:

(1) Concrete for Class S or Class B shall be sampled only once during discharge in the middle portion of the batch.

1006-7.02 Sampling and Testing of Concrete: the third paragraph of the ADOT Standard Specifications is revised to read:

Concrete pumped to facilitate placement will be sampled for acceptance at the final point of placement. Samples will be taken during continuous discharge of concrete that has been pumped beyond the pump hopper without interruption at the normal production rate. Where freeze-thaw durability is of concern (such as in bridge decks, overlays, approach slabs, and barrier walls), the concrete shall also be sampled at the truck to determine air loss through the pump. In accordance with Subsection 601-3.03(C), if the loss of air as measured between the supply truck and the point of placement exceeds two percent, the Contractor shall employ measures acceptable to the Engineer to reduce the loss of air to less than two percent. If sampling at the point of placement is not practical, as determined by the Engineer, or creates a safety concern, the concrete shall be sampled for acceptance at the truck. When acceptance sampling can only be performed at the truck, the acceptable range of air content of the supplied mix will be adjusted to not less than five percent nor more than eight percent in accordance with Subsection 1006-3.01.

1006-7.02 Sampling and Testing of Concrete: of the ADOT Standard Specifications is modified to add:

If approved by the Engineer, and unless otherwise specified, Arizona Test Method 318 may be used to estimate concrete strength by the maturity method. The maturity method shall not substitute for compressive strength acceptance testing (28-day test cylinder breaks). The Contractor shall submit a written request to the Engineer prior to using the maturity method. If its use is approved by the Engineer, the Contractor shall be responsible to develop the strength-maturity relationship and shall also be responsible to provide the maturity meter(s) and digital data loggers necessary, as well as performing all required testing, all at no additional cost to the Department.

1006-7.03(A) Class S and Class B Concrete: of the ADOT Standard Specifications is revised to read:

For Class S concrete with a compressive strength requirement less than 4000 psi, a sample of concrete for the required tests, as specified in Subsection 1006-7.02, will be taken on a daily basis for each 100 cubic yards, or fraction thereof, of continuously placed concrete from each batch plant. For Class S concrete with a compressive strength requirement equal to or greater than 4000 psi, a sample of concrete for the required tests, as specified in Subsection 1006-7.02, will be taken on a daily basis for each 50 cubic yards, or fraction thereof, of continuously placed concrete from each batch plant. For Class B concrete, a sample of concrete for the required tests, as specified in Subsection 1006-7.02, will be taken for each 100 cubic yards placed from each batch plant. For Class S or Class B concrete placed at elevations of 3,000 feet or above, air content testing shall be performed for each 50 cubic yards placed, regardless of the compressive strength requirement. An additional sample or samples for any of the required tests may be taken at an interval of less than the sampling frequency specified above, at the discretion of the Engineer, on any batch or load of concrete. A sample for the required tests on daily placements of 10 cubic yards or less may be taken at the discretion of the Engineer.

1006-7.03(B) **Class E Concrete:** of the ADOT Standard Specifications is revised to read:

1006-7.03(B) **BLANK**

1006-7.06(A) **Class P Concrete:** the fourth sentence of the second paragraph of the ADOT Standard Specifications is revised to read:

Cores must be obtained under the observation of an ADOT representative and delivered to the Engineer in time to allow complete testing within 48 days of placement. Testing shall be performed by the Department.

1006-7.06(B) **Class S and Class B Concrete:** the second paragraph of the ADOT Standard Specifications is revised to read:

Concrete failing to meet at least 85 percent of the 28-day compressive strength for specified strengths of 3,000 pounds per square inch and below, 90 percent for a specified strength of 3,500 pounds per square inch, or 95 percent for specified strengths of 4,000 pounds per square inch and above, or any concrete failing to meet the other requirements of Subsection 1006-7.01, will be rejected and removed at no additional cost to the Department and replaced with concrete which meets the specified requirements, unless the Contractor can submit evidence that will indicate to the Engineer that the strength and quality of the concrete is such that the concrete should be considered acceptable and be allowed to remain in place.

1006-7.06(B) **Class S and Class B Concrete:** the third sentence of the last paragraph of the ADOT Standard Specifications is revised to read:

All cores shall be obtained and tested in accordance with the requirements of Arizona Test Method 317. Testing shall be performed by the Department.

1006-7.06(C) **Class E Concrete:** of the ADOT Standard Specifications is revised to read:

1006-7.06(C) **BLANK**

SECTION 1011 JOINT MATERIALS

Joint Materials shall be in accordance with Section 1011 of the ADOT Standard Specifications except as modified herein.

1011-3 **Joint Sealant (Hot-Poured):** the title and text of the ADOT Standard Specifications is revised to read:

1011-3 **Joint Sealant (Hot-Applied):**

Joint sealant material, including asphalt-rubber sealants, shall be a hot-applied type, conforming to the requirements of ASTM D 6690, Type II or Type III. Joint sealant shall not contain any coal-tar materials.

The following requirement shall be added to the "Packaging and Package Marking" requirements of ASTM D 6690:

The minimum ambient temperature during application and ambient temperatures under various storage conditions shall be clearly marked on the container.

Certificates of Compliance conforming to the requirements of Subsection 106.05 shall be submitted.

1011-6.03 Semi-rigid, Closed-cell Polypropylene Foam, Preformed Expansion Joint Filler: is hereby added to the ADOT Standard Specifications:

Semi-rigid, closed-cell polypropylene foam, preformed expansion joint filler, shall conform to the requirements of ASTM D8139.

1011-8.03 Field Performance: of the Standard Specifications is revised to read:

The manufacturer of the joint sealant shall demonstrate satisfactory field performance in Arizona, or by NTPEP field evaluation, of less than one percent total failure (either within the material or the adhesive bond to the joint face) after one year of service, before the material shall be used.

SECTION 1013 BEARING PADS

Bearing pads shall be in accordance with Section 1013 of the ADOT Standard Specifications except as modified herein.

TABLE 1013-2: FABRICATION TOLERANCES: Item "7. Thickness" of the ADOT Standard Specifications is revised to read:

Table 1013-2 FABRICATION TOLERANCES		
Parameters	**Tolerances**	
	(-)	(+)
7. Thickness Top and Bottom Cover Layer (if required)	0	1/8 inch

SECTION 1015 EPOXY MATERIALS

Epoxy Materials shall be in accordance with Section 1015 of the ADOT Standard Specifications except as modified herein.

1015-1 General Requirements: the first paragraph of the ADOT Standard Specifications is revised to read:

Certificates of Compliance, conforming to the requirements of Subsection 106.05, shall be submitted to the Engineer by the Contractor for any epoxy materials used on a specific project. Only those epoxy materials shown on the Department's Approved Products List (APL), or equal, will be allowed for use. Approved products may only be used in accordance with the limitations

stated in the manufacturer's instructions, the APL, and the International Code Council Evaluation Service (ICC-ES) evaluation report for the product, if applicable. Copies of the most current version of the APL are available on the internet from the ADOT Research Center, through its Product Evaluation Program.

1015-1.02 Directions for Use: the third paragraph of the ADOT Standard Specifications is revised to read:

Immediately prior to mixing, each component shall be thoroughly mixed with a paddle, unless otherwise specified. Separate paddles shall be used to stir each component.

1015-2 Epoxy Resin Based Anchoring Adhesive: the title and text of the ADOT Standard Specifications are revised to read:

1015-2 Epoxy Resin Based, Post-Installed, Anchoring Adhesive:

Epoxy resin based, post-installed, adhesive anchoring systems shall be used for bonding anchors and rebar dowels into hardened concrete or masonry. Applications shall be limited to horizontal and down hole orientations. Post-installed anchoring adhesive shall not be used in any overhead vertical application, or permanently sustained purely axial tension application.

The anchoring adhesive shall consist of a two component epoxy resin based formula that is packaged in a dual-cylinder cartridge that can automatically combine the constituents in the proper proportions. Manual proportioning of the components shall not be used for anchoring applications. The adhesive shall not be used beyond the expiration date shown on the packaging.

For horizontal applications where flow out of the anchoring hole is a problem, high viscosity or non-sag anchoring adhesives shall be used. Low and medium viscosity anchoring adhesives may be utilized in down holes which open upward. The product shall only be used for the application and limitations for which it was designed according to the manufacturer's product literature. Post-installed anchoring adhesives shall be installed in accordance with the manufacturer's printed installation instructions (MPII). Installation of adhesive anchors shall be performed by personnel trained to install adhesive anchors.

(A) Structural Applications:

Structural applications are defined as those requiring the anchoring adhesive system to develop a minimum tensile and shear strength resistance to an applied load. Post-installed anchoring adhesives shall have been tested in accordance with ICC-ES Acceptance Criteria for Post-Installed Adhesive Anchors in Concrete (AC308), which incorporates the requirements found in ACI 355.4. A current ICC-ES evaluation report for the anchoring adhesive shall be submitted to the Engineer, who will review the conditions of use listed in the report before it is approved for use on a project. The conditions of use include limitations on base material temperature since higher temperatures affect adhesive bond tension and shear load strength. The anchoring adhesive shall only be used for the broad category (un-cracked concrete, cracked concrete, or masonry) for which it has been designated in the ICC-ES report.

Horizontal applications where a component of the applied load will be in sustained tension shall be installed by an individual who has a current ACI/CRSI Adhesive Anchor Installer Certification.

(B) Load Transfer Dowel and Tie-Bar Applications:

Applications for load transfer dowels and tie-bars are defined as those required to transfer load across joints in concrete slabs, walls and other concrete and masonry members. Epoxy adhesive bonding material shall provide a minimum pullout resistance of 13,200 pounds when tested in accordance with ASTM E488. The anchors shall be installed, using the adhesive bonding material, in the concrete or masonry member in strict accordance with the manufacturer's instructions. The anchoring adhesive shall only be used for the broad category (un-cracked concrete, cracked concrete, or masonry) for which it has been designated in the manufacturer's product literature.

SECTION 1017 NONSHRINK GROUT MATERIALS

1017-1 **General Requirements:** the first paragraph of the Standard Specifications is revised to read:

Certificates of Compliance, conforming to the requirements of Subsection 106.05, shall be submitted to the Engineer by the Contractor for any nonshrink grout materials used on a specific project. Only nonshrink materials shown on the Department's Approved Products List (APL) will be allowed for use. Copies of the most current version of the APL are available on the internet from the ADOT Research Center, through its Product Evaluation Program. The nonshrink grout material must be approved for the use or application for which it is intended and shall meet the requirements of ASTM C1107, unless otherwise specified herein.

1017-4 **Nonshrink Grout Material Requirements:** the third and fourth paragraphs of the Standard Specifications are revised to read:

The compressive strength shall be determined in accordance with the requirements of ASTM C1107. The minimum compressive strength at seven days shall be 2,500 pounds per square inch and the minimum compressive strength at 28 days shall be 5,000 pounds per square inch. Nonshrink grouts with high early strength development as stated by the manufacturer will be tested for conformance to the manufacturer's claims. The compressive strength of nonshrink grout material at 28 days shall be equal to or greater than the 28 day compressive strength requirement of the concrete to be patched.

The expansion percent for the nonshrink grout material shall be determined in accordance with the requirements of ASTM C1107. The maximum expansion shall be 0.4 percent when measured at 3, 14, and 28 days. The percent shrinkage at 28 days shall be zero.

***Contract Forms are a binding part of**
Informal Bid Documents and Awarded Contract.*

CONTRACT FORMS LIST

Proposal	**P-1 to P-3**
Bidding Schedule	**BS-1 to BS-2**
Bid Bond	**BB-1**
Qualification & Certification	**QC-1 to QC-2**
Reference List	**RL-1**
Affidavit of Non-Collusion	**ANC-1**
Subcontractor Certification	**SC-1**
Checklist & Addenda Acknowledgment	**CK-1**
Contract	**C-1 to C-7**
Contract Performance Bond	**CPB-1**
Labor and Materials Bond	**LMB-1**
Contract Performance Warranty	**CPW-1**
IRS W-9 Form	**W-9**

PROPOSAL (P-1 to P-3)

TO THE GILA COUNTY PUBLIC WORKS DIVISION:

Gentlemen:

The following Proposal is made for **Bid No. 091120 - Rim Trail Bridge Replacement**, in the County of Gila in the State of Arizona.

The following Proposal is made on behalf of

_____

_____

_____

and no others. The Proposal is in all respects fair and is made without collusion on the part of any person, firm or corporation mentioned above, and no member or employee of Gila County is personally or financially interested, directly or indirectly, in the Proposal, or in any purchase or sale of any materials or supplies for the work to which it relates, or in any portion of the profits thereof.

The undersigned certifies that the approved Plans, Technical Specifications, General and Special Provisions and forms of Contract and Bond authorized by Gila County and constituting essential parts of this Proposal, have been carefully examined, and also that the site of the work has been personally inspected. The undersigned declares that the amount and nature of the work to be done is understood and that at no time will misunderstanding of the Plans, Technical Specifications, General Provisions, Special Provisions, or conditions to be overcome, be plead. On the basis of Plans, Technical Specifications, General and Special Provisions, each Addendum (if any) and the forms of Contract and Bond proposed for use, the undersigned proposes to furnish all the necessary equipment, materials, machinery, tools, apparatus, and other means of construction, and labor, to do all the work in the manner specified and to finish the entire project within the time hereinafter proposed, and to accept, as full compensation therefore, the sum of the various products obtained by multiplying each unit price, herein bid for the work or materials on the attached Bidding Schedule, by the quantity thereof actually incorporated in the complete project, as determined by the Public Works Director. The undersigned understands that the quantities mentioned herein are approximate only and are subject to increase or decrease and hereby proposes to perform all quantities of work as either increased or decreased, in accordance with the provisions of the Specifications, at the unit price bid in the attached Bidding Schedule.

The undersigned further proposes to perform all extra work that may be required on the basis provided in the Specifications and to give such work personal attention and to secure economical performance.

Proposal continued…

The undersigned further proposes to execute the Contract Agreement and furnish satisfactory Bonds within ten (10) calendar days from the date of Notice of Award, time being of the essence. The undersigned further proposes to begin work as specified in the contract attached hereto, and to complete the work **within two hundred eighty (280) Calendar Days from the commencement date as specified on the Notice to Proceed,** and maintain at all times a Payment Bond and Performance, Labor and Material Bonds, approved by the Public Works Director, in an amount equal to one hundred (100) percent of the total bid. These bonds shall serve not only to guarantee the completion of the work on the part of the undersigned, but also to guarantee the excellence of both workmanship and material and the payment of all obligations incurred, until the work is finally accepted and the provisions of the Plans, Standard Specifications and Special Provisions fulfilled.

A Proposal Guaranty in the amount and character named in the Call for Bids is enclosed amounting to not less than ten (10) percent of the total bid, which Proposal Guaranty is submitted as a guaranty of the good faith of the bidder and that the bidder will enter into written contract, as provided, to do the work, if successful in securing the award thereof, and it is hereby agreed that if at any time other than as provided in the Proposal requirements and conditions the undersigned should withdraw this Proposal, or if the Proposal is accepted and there should be failure on the part of the undersigned to execute the Contract and furnish satisfactory Bond as herein provided, Gila County, in either of such events, shall be entitled and is hereby given the right to retain the said Proposal Guaranty as liquidated damages.

If by a Corporation:

(SEAL)

Corporate Name: _____

Corporate Address: _____

Incorporated under the laws of the State of : _____

By (Signature): _____ **Date:**_____

President: _____

Secretary: _____

Treasurer: _____

Proposal continued…

If by a Firm or Partnership:

Firm or Partnership Name: _____

Firm or Partnership Address: _____

By (Signature): _____ **Date:**_____

Name and Address of Each Member: _____

_____

_____

_____

_____

If by an Individual:

Signature: _____ **Date:** _____

BIDDING SCHEDULE (BS-1 to BS-2)

RIM TRAIL BRIDGE REPLACEMENT
GILA COUNTY, ARIZONA

We agree to provide all work and material necessary to complete the project as shown on the plans and specifications for the following Contract Price:

Firm Name: _____

TOTAL CONTRACT PRICE, for the sum of $ _____

WRITTEN TOTAL CONTRACT PRICE

_____**Dollars**

and _____**Cents.**

This Contract Price is based upon the Bidder's quantities and unit prices tabulated on Page BS-2 of the Proposal. The Bidder agrees that the Contract Price will be payment in full for all work shown on the plans and described in the Contract Documents.

Any authorized increases or decreases to the work shall be authorized by Change Order. The Contract Price shall be increased or decreased by the amount of work or material increased or decreased at the following Bid Unit Prices.

BS-2

Item No.	Item Description	Unit	Quan.	Unit Price	Total Price
2020047	REMOVAL OF SIGNS	EACH	2		
2020053	REMOVE (WOOD POST)	EACH	2		
2020057	REMOVE AND SALVAGE (GATE)	EACH	2		
2020065	REMOVAL OF TREES (GREATER THAN 12" DIAMETER)	EACH	1		
2020071	REMOVE GUARD RAIL	L.FT.	88		
2020101	REMOVE FENCE	L.FT.	185		
2020115	REMOVE TREE (12" DIAMETER OR LESS)	EACH	6		
2050001	GRADING ROADWAY FOR PAVEMENT	SQ.YD.	464		
3030022	AGGREGATE BASE, CLASS 2	CU.YD.	65		
4090003	ASPHALTIC CONCRETE (MISCELLANEOUS STRUCTURAL)	TON	36		
7010005	MAINTENANCE AND PROTECTION OF TRAFFIC	L.SUM	1		
8030103	DECOMPOSED GRANITE	SQ.YD.	243		
8101016	EROSION CONTROL (ROCK MULCH) (GRADATION C)	CU.YD.	21		
8101021	EROSION CONTROL (WATTLES) (9")	L.FT.	390		
9010001	MOBILIZATION	L.SUM	1		
9020002	CHAIN LINK FENCE, TYPE 1 (48")	L.FT.	10		
9020251	RECONSTRUCT FENCE GATE FROM SALVAGE	EACH	2		
9030008	FENCE (SEE DETAIL B)	L.FT.	157		
9031001	TEMPORARY FENCE	L.FT.	165		
9240010	FORCE ACCOUNT WORK (UNFORSEEN CONDITIONS)	L.SUM	1		
9250001	CONST. SURVEYING AND LAYOUT	L.SUM	1		
2020002	REMOVE BRIDGE	L.SUM	1		
2030501	STRUCTURAL EXCAVATION	CU.YD.	90		
2030506	STRUCTURE BACKFILL	CU.YD.	30		
6010004	STRUCTURAL CONCRETE (CLASS S) (F'C = 4,000)	CU.YD.	30		
6010005	STRUCTURAL CONCRETE (CLASS S) (F'C = 4,500)	CU.YD.	20		
6011363	APPROACH SLAB (SPECIAL DETAIL)	SQ.FT.	140		
6040001	STRUCTURAL STEEL	LB.	17,140		
6050012	REINFORCING STEEL (EPOXY COATED)	LB.	8,582		
9050701	W-BEAM & POST RAILING (TXDOT TYPE T631LS)	L.FT.	100		
9130005	RIPRAP (GABIONS)	CU.YD.	51		
				Total Base Bid	

GILA COUNTY

SURETY (BID) BOND (BB-1)

(Penalty of this bond must not be less than 10% of the bid amount)

KNOW ALL MEN BY THESE PRESENTS, that we, the undersigned _____,

as Principal, hereinafter called the Principal, and _____,

a corporation duly organized under the laws of the State of _____,

as Surety, hereinafter called the Surety, holding a certificate of authority to transact surety business in this State issued by the Director of the Department of Insurance, are held and firmly bound unto Gila County as Obligee, hereinafter called the Obligee, in the sum of ten percent (10%) of the amount bid, submitted by Principal to Gila County for the work described below, for the payment of which sum well and truly to be made, the said Principal and the said Surety bind ourselves, our heirs, executors, administrators, successors, and assigns, jointly and severally, firmly by these presents.

WHEREAS, the Principal is herewith submitting its proposal for:

BID NO. 091120 - Rim Trail Bridge Replacement

NOW THEREFORE, if the Obligee, acting by and through its Public Works Director, accepts the proposal of the Principal and the Principal shall enter into contract with the Obligee in accordance with the terms of such proposal, and give such bonds and certificates of insurance as may be specified in the contract documents with good and sufficient surety for the faithful performance of such contract and for the prompt payment of labor and material furnished in the prosecution thereof, or in the event of the failure of the Principal to enter into such contract and give such bonds and certificates of insurance, if the Principal shall pay to the Obligee the difference not to exceed the penalty of the bond between the amount specified in the proposal and such larger amount for which the Obligee may in good faith contract with another party to perform the work covered by the proposal then this obligation is void. Otherwise, it remains in full force and effect provided, however, that this bond is executed pursuant to the provisions of ARS '34-201, and all liabilities on this bond shall be determined in accordance with the provisions of the section to the extent as if it were copied at length herein.

IN WITNESS WHEREOF, we hereunto set our hands and seals:

Principal	**Surety**
By	**By Attorney-in-Fact**
Title	**Address, Attorney-in-Fact** **Subscribed and sworn to before me** **this ____ day of _____, 20____**
	My commission expires: _____
	Notary Public

GILA COUNTY
QUALIFICATION AND CERTIFICATION FORM (QC-1 TO QC-2)

Purpose

This exhibit shall serve as a requirement to enable the evaluation team to assess the qualifications of Contractors under consideration for final award.

The information may or may not be a determining factor in award.

Bid Number 091120 - RIM TRAIL BRIDGE REPLACEMENT

The applicant submitting this Bid warrants the following:

1. Name, Address, and Telephone Number of Principal Contractor:

   _____

   _____

   _____

2. Has Contractor (under its present or any previous name) ever failed to complete a contract? _____Yes _____No. If "Yes, give details, including the date, the contracting agency, and the reasons Contractor failed to perform, in the narrative part of this Contract.

3. Has Contractor (under its present or any previous name) ever been disbarred or prohibited from competing for a contract? _____Yes _____No. If "Yes", give details, including the date, the contracting agency, the reasons for the Contractors disqualification, and whether this disqualification remains in effect, in the narrative part of this Contract.

4. Has a contracting agency ever terminated a contract for cause with Contractor (under your firm's present or any previous name)? _____Yes _____No. If "Yes", give details including the date, the contracting agency, and the reasons Contractor was terminated, in the narrative part of this Contract.

5. Contractor must also provide at least the following information:
   a. A brief history of the Contractors Firm.
   b. A Cost Proposal shall be submitted on the Bid Schedule, attached hereon and made a full part of this contract by this reference.
   c. A list of previous and current customers, which are considered identical or similar to the Scope of Work described herein; shall be submitted on the Reference List, attached hereon and made a full part of this contract by this reference.

d. List of any subcontractors (if applicable) to be used in performing the service must accompany the Proposal. The subcontractors Arizona ROC, contact name and phone # must be included.

e. List the specific qualifications the Contractor has in supplying the specified services.

f. Gila County reserves the right to request additional information.

6. Contractor Experience Modifier (e-mod) Rating in Arizona: _____

A method the National Council on Compensation Insurance (NCCI) uses to measure a business' computed loss ratio and determine a factor, which when multiplied by premium, can reward policyholders with lower losses. E-mod rate may be a determining factor in bid award.

7. Current Arizona Contractor License Number: _____

_____

Signature of Authorized Representative

_____

Printed Name

_____

Title

GILA COUNTY
REFERENCE LIST (RL-1)

These references are required to enable the evaluation team to assess the qualifications of the Contractor under consideration for final award. The information may be a determining factor in award.

References

Please list a minimum of four (4) references for projects of similar size and scope as this Invitation for Bids during the past twelve (12) months, in or as close to Gila County as possible.

1. **Company:** _____
   Contact: _____
   Phone: _____
   Address: _____

2. **Company:** _____
   Contact: _____
   Phone: _____
   Address: _____

3. **Company:** _____
   Contact: _____
   Phone: _____
   Address: _____

4. **Company:** _____
   Contact: _____
   Phone: _____
   Address: _____

_____
Name of Business

_____
Signature of Authorized Representative

_____
Title

AFFIDAVIT BY CONTRACTOR (ANC-1)

CERTIFYING THAT THERE WAS
NO COLLUSION
IN BIDDING FOR CONTRACT

STATE OF ARIZONA)
)ss
COUNTY OF:)

_____
(Name of Individual)
being first duly sworn, deposes and says:

That he is _____
(Title)
of_____
and
(Name of Business)

That he is properly prequalified by Gila County for bidding on **BID NO. 091120 - Rim Trail Bridge Replacement** and,

That pursuant to Section 112 (C) of Title 23 USC, he certifies as follows:

That neither he nor anyone associated with the said _____

_____
(Name of Business)

has, directly or indirectly entered into any agreement, participated in any collusion or otherwise taken any action in restraint of free competitive bidding in connection with the above mentioned project.

_____
Name of Business

_____
By

_____
Title

Subscribed and sworn to before me this _____ day of _____, 20_____.

_____ **My Commission expires:**
Notary Public

GILA COUNTY

CERTIFICATION:
INTENTIONS CONCERNING SUBCONTRACTING (SC-1)

At the time of the submission of **Invitation for Bid No. 091120,** my intention concerning subcontracting a portion of the work is as indicated below.

In indicating that it is my intention to subcontract a portion of the work, this will acknowledge that such **subcontractors will be identified and approved by the County prior to award of contract**; and that documentation, such as copies of letters, requests for quotations, etc., substantiating the actions taken and the responses to such actions is on file and available for review.

Yes ☐ it is my intention to subcontract a portion of the work.

No ☐ it is not my intention to subcontract a portion of the work.

_____
Name of Business

_____
Signature of Authorized Representative

_____
Title

BIDDERS CHECKLIST & RECEIPT OF ADDENDA (CK-1)

NOTICE IS HEREBY GIVEN that all Bid Documents shall be completed and/or executed and submitted with this bid. If bidder fails to complete and/or execute any portion of the Bid Documents, this bid will be determined to be "non-responsive" and rejected.

CHECKLIST:

REQUIRED DOCUMENT	COMPLETED AND EXECUTED
Proposal	_____
Bidding Schedule	_____
Surety (Bid) Bond	_____
Qualification & Certification Form	_____
Reference List	_____
Affidavit of Non-Collusion	_____
Subcontractor Certification	_____
Bidders Checklist & Addenda Acknowledgment	_____

ACKNOWLEDGMENT OF RECEIPT OF ADDENDA:

	#1	#2	#3	#4	#5
Initials and Date	_____	_____	_____	_____	_____

Signed and dated this _____ day of_____, 2020.

_____
CONTRACTOR:

_____
BY:

Each complete bid shall be sealed in an envelope and bearing the following statement on the outside of the envelope: Bid No. 091120 - Rim Trail Bridge Replacement. **All complete bids shall be filed at Gila County Procurement**, Copper Building Conference Room, 1400 E. Ash St., Globe, AZ 85501, before Tuesday November, 17, 2020 at 4pm.

GILA COUNTY

CONTRACT NO. 091120 (C-1 TO C-7)

THIS AGREEMENT, made and entered into this _____ day of _____, **2020**, by and between Gila County, a political subdivision of the State of Arizona, party of the first part, hereinafter designated the **OWNER**, and _____ of the City of _____, County of _____, State of Arizona, party of the second part, hereinafter designated the **CONTRACTOR**.

WITNESSETH: That the said **Contractor**, for and in consideration of the sum to be paid him by the said **Owner**, in the manner and at the time hereinafter provided, and of the other covenants and agreements herein contained, and under the penalties expressed in the bond hereto attached, hereby agrees, for himself, his heirs, administrators, successors, and assigns as follows:

ARTICLE I - SCOPE OF WORK: The **Contractor** shall furnish any and all materials, labor, construction equipment, and services, required for performing all work for construction for **Bid No. 091120 - Rim Trail Bridge Replacement,** in accordance with the plans and these specifications, and to completely and totally construct the same and install the material herein for the **Owner**, in a good and workmanlike and substantial manner and to the satisfaction of the **Owner** through its Engineers and under the direction and supervision of the Engineer, or his properly authorized agents and strictly pursuant to and in conformity with the Specifications prepared by the Engineers for the **Owner**, and with such modifications of the same and other documents that may be made by the **Owner** through the Engineer, or his properly authorized agents, as provided herein. Once the Bid has been awarded the bid number 091120 will become the Contract Number.

ARTICLE II - CONTRACT DOCUMENTS: The attached "Call for Bids", "Special Provisions", "Proposal", "Bidding Schedule", "Bid Bond", "Qualification & Certification Forms", "Reference List", "Affidavit of Non-Collusion", "Subcontractor Certification", "Employment Laws Acknowledgment", "Checklist & Addenda Acknowledgment", "Performance Bond", "Labor and Materials Bond", "Contract Performance Bond", and Plans thereto, if any, are by this reference made a part of this Contract to the same extent as if set forth herein in full. In the event of any conflict or any inconsistency in the documents, controlling weight shall be assigned in the following order: the Contract; the Special Provisions; all other documents. The Contract is considered invalid unless signed by the Gila County Board of Supervisors.

ARTICLE III – SAFETY AND LOSS CONTROL: The Gila County Safety and Loss Control booklet must be read and signed by all working at the job site.

Contract continued…

ARTICLE IV – INDEMNIFICATION CLAUSE: The Contractor agrees to indemnify and save harmless the County of Gila, its officers, agents and employees, and any jurisdiction or agency issuing permits for any work included in the project, their officers, agents and employees, hereinafter referred to as indemnitee, from all suits and claims, including attorney's fees and cost of litigation, actions, loss, damage, expense, cost or claims of any character or any nature arising out of the work done in fulfillment of the terms of this Contract or on account of any act, claim or amount arising or recovered under workers' compensation law or arising out of the failure of the Contractor to conform to any statutes, ordinances, regulation, law or court decree. It is agreed that the Contractor will be responsible for primary loss investigation, defense and judgment costs where this contract of indemnity applies. In consideration of the award of this contract, the Contractor agrees to waive all rights of subrogation against the County, its officers, officials, agents and employees for losses arising from the work performed by the Contractor for the County.

ARTICLE V – INSURANCE REQUIREMENTS: Contractor and subcontractors shall procure and maintain until all of their obligations have been discharged, including any warranty periods under this Contract are satisfied, insurance against claims for injury to persons or damage to property which may arise from or in connection with the performance of the work hereunder by the Contractor, his agents, representatives, employees or subcontractors.

The insurance requirements herein are minimum requirements for this Contract and in no way limit the indemnity covenants contained in this Contract.

The County in no way warrants that the minimum limits contained herein are sufficient to protect the Contractor from liabilities that might arise out of the performance of the work under this Contract by the Contractor, his agents, representatives, employees, or subcontractors. Contractor is free to purchase such additional insurance as may be determined necessary.

A. **MINIMUM SCOPE AND LIMITS OF INSURANCE -** Contractor shall provide coverage with limits of liability not less than those stated below:

1. **Commercial General Liability – Occurrence Form**
   Policy shall include bodily injury, property damage, broad form contractual liability and XCU coverage.
   - General Aggregate
     $2,000,000
   - Products – Completed Operations Aggregate $1,000,000
   - Personal and Advertising Injury
     $1,000,000
   - Each Occurrence
     $1,000,000

Contract continued…

a. The policy shall be endorsed to include the following additional insured language: **"The County of Gila shall be named as an additional insured with respect to liability arising out of the activities performed by, or on behalf of the Contractor".**

2. **Automobile Liability**

Bodily injury and property damage for any owned, hired, and non-owned vehicles used in the performance of this Contract.

Combined Single Limit (CSL)	$1,000,000

a. The policy shall be endorsed to include the following additional insured language: **"The County of Gila shall be named as an additional insured with respect to liability arising out of the activities performed by, or on behalf of the Contractor, including automobiles owned, leased, hired or borrowed by the Contractor".**

3. **Worker's Compensation and Employers' Liability**

Workers' Compensation	Statutory
Employers' Liability	
Each Accident	$100,000
Disease – Each Employee	$100,000
Disease – Policy Limit	$500,000

a. Policy shall contain a **waiver of subrogation** against the County of Gila.

B. **ADDITIONAL INSURANCE REQUIREMENTS:** The policies shall include, or be endorsed to include, the following provisions:

1. On insurance policies where the County of Gila is named as an additional insured, the County of Gila shall be an additional insured to the full limits of liability purchased by the Contractor even if those limits of liability are in excess of those required by this Contract.
2. The Contractor's insurance coverage shall be primary insurance and non-contributory with respect to all other available sources.
3. Coverage provided by the Contractor shall not be limited to the liability assumed under the indemnification provisions of this Contract.

C. **NOTICE OF CANCELLATION:** Each insurance policy required by the insurance provisions of this Contract shall provide the required coverage and shall not be suspended, voided, canceled, reduced in coverage or endorsed to lower limits except after thirty (30) days prior written notice has been given to the County. Such notice shall be sent directly to **Betty Hurst, Contracts Administrator, 1400 E. Ash St., Globe, AZ 85501** and shall be sent by certified mail, return receipt requested.

Contract continued…

D. **ACCEPTABILITY OF INSURERS:** Insurance is to be placed with insurers duly licensed or approved unlicensed companies in the state of Arizona and with an "A.M. Best" rating of not less than B+ VI. The County in no way warrants that the above-required minimum insurer rating is sufficient to protect the Contractor from potential insurer insolvency.

E. **VERIFICATION OF COVERAGE:** Contractor shall furnish the County with certificates of insurance (ACORD form or equivalent approved by the County) as required by this Contract. The certificates for each insurance policy are to be signed by a person authorized by that insurer to bind coverage on its behalf.

All certificates and endorsements are to be received and approved by the County before work commences. Each insurance policy required by this Contract must be in effect at or prior to commencement of work under this Contract and remain in effect for the duration of the project. Failure to maintain the insurance policies as required by this Contract or to provide evidence of renewal is a material breach of contract.

All certificates required by this Contract shall be sent directly to **Betty Hurst, Contracts Administrator, 1400 E. Ash St., Globe, AZ 85501**. The County project/contract number and project description shall be noted on the certificate of insurance. The County reserves the right to require complete, certified copies of all insurance policies required by this Contract at any time**.**

F. **SUBCONTRACTORS:** Contractors' certificate(s) shall include all subcontractors as additional insureds under its policies **or** Contractor shall furnish to the County separate certificates and endorsements for each subcontractor. All coverage's for subcontractors shall be subject to the minimum requirements identified above.

G. **APPROVAL:** Any modification or variation from the insurance requirements in this Contract shall be made by the County Attorney, whose decision shall be final. Such action will not require a formal Contract amendment, but may be made by administrative action.

ARTICLE VI - TIME OF COMPLETION: The Contractor further covenants and agrees, at his own proper cost and expense, to do all work and furnish all materials, labor, construction equipment, and services for performing all of the work for construction of said improvements and to completely construct the same and install the material therein, as called for by this agreement free and clear of all claims, liens, and charges whatsoever, in the manner and under the conditions specified within the time, or times, stated in the Proposal.

Work on this project shall start within **no later than ten (10) Days of the Notice To Proceed,** and shall be completed within the following limits:

Contract continued…

SCHEDULE:

For construction in the contract documents, the project shall be completed within **280 Calendar Days of the commencement date as specified on the Notice To Proceed**.

It is expressly understood and agreed that in case of failure on the part of the Contractor, for any reason, except with the written consent of the Engineer, to complete the work to the satisfaction of the Engineer and within the aforesaid time limits, the Owner may deduct from any money due, or which may become due the Contractor, as liquidated damages, an amount as fixed by the following schedule:

WORK ITEM	DAILY CHARGE PER CALENDAR DAY
All work not complete within the above specified time after start of work.	**$490.00**

If no money shall be due the Contractor, the Owner shall have a cause of action to recover against the Contractor in a court of competent jurisdiction, liquidated damages as fixed by the above schedule; said deduction to be made, or said sum to be recovered, not as a penalty, but as liquidated damages; provided, however, that upon receipt of written notice from the Contractor, of the existence of causes, as herein provided, over which said Contractor has no control and which must delay the completion of the said work or any delay occasioned by the Owner, the Engineer may extend the period hereinafter specified for the completion of said work in accordance with the specifications and in such case, the Contractor shall become liable for said liquidated damages for delays commencing from date said extension period shall expire.

ARTICLE VII - CANCELLATION: This agreement is subject to cancellation pursuant to **A.R.S. §38-511** and **GENERAL PROVISION 108-10 DEFAULT AND TERMINATION OF CONTRACT.**

ARTICLE VIII - PAYMENTS: The Contractor shall make an estimate of the work performed during the preceding month and submit the same to the Engineer for checking. On or before ***thirty (30) days*** after the certified and approved estimate of the work is received by the Owner, the Owner shall pay to the Contractor ninety percent (90%) of the value of said work in place, as approved by the Engineer. The balance of ten percent (10%) of the estimate shall be retained by the Owner until the time of final payment and acceptance of said work, as per **A.R.S. §34-221(A)(2).**

Contract continued…

ARTICLE IX – LAWS AND ORDINANCES: This agreement shall be enforced under the laws of the State of Arizona. The Contractor shall maintain in current status all Federal, State, and Local licenses and permits required for the operation of the business conducted by the Contractor.

The **Contractor** shall comply with the applicable provisions of the Americans with Disabilities Act **(Public Law 101-336, 42 U.S.C. 12101-12213)** and applicable Federal regulations under the Act.

ARTICLE X – LEGAL ARIZONA WORKERS ACT COMPLIANCE: Contractor hereby warrants that it will at all times during the term of this Contract comply with all federal immigration laws applicable to Contractor's employment of its employees, and with the requirements of A.R.S. § 23-214 (A) (together the "State and Federal Immigration Laws"). Contractor shall further ensure that each subcontractor who performs any work for Contractor under this contract likewise complies with the State and Federal Immigration Laws.

County shall have the right at any time to inspect the books and records of Contractor and any subcontractor in order to verify such party's compliance with the State and Federal Immigration Laws.

Any breach of Contractor's or any subcontractor's warranty of compliance with the State and Federal Immigration Laws, or of any other provision of this section, shall be deemed to be a material breach of this Contract subjecting Contractor to penalties up to and including suspension or termination of this Contract. If the breach is by a subcontractor, and the subcontract is suspended or terminated as a result, Contractor shall be required to take such steps as may be necessary to either self-perform the services that would have been provided under the subcontract or retain a replacement subcontractor, (subject to County approval if MWBE preferences apply) as soon as possible so as not to delay project completion.

Contractor shall advise each subcontractor of County's rights, and the subcontractor's obligations, under this Article by including a provision in each subcontract substantially in the following form:

"Subcontractor hereby warrants that it will at all times during the term of this contract comply with all federal immigration laws applicable to Subcontractor's employees, and with the requirements of A.R.S. §23-214 (A). Subcontractor further agrees that County may inspect the Subcontractor's books and records to insure that Subcontractor is in compliance with these requirements. Any breach of this paragraph by Subcontractor will be deemed to be a material breach of this contract subjecting Subcontractor to penalties up to and including suspension or termination of this contract."

ARTICLE XI – ISRAEL BOYCOTT CERTIFICATION: Contractor hereby certifies that it is not currently engaged in and will not, for the duration of this agreement, engage in a boycott of Israel as defined by A.R.S. § 35-393.01. Violation of this certification by Contractor may result in action by County up to and including termination of this agreement.

Any additional costs attributable directly or indirectly to remedial action under this Article shall be the responsibility of Contractor. In the event that remedial action under this Article results in delay

to one or more tasks on the critical path of Contractor's approved construction or critical milestones schedule, such period of delay shall be deemed excusable delay for which Contractor shall be entitled to an extension of time, but not costs.

IN WITNESS WHEREOF, three (3) identical counterparts of this contract, each of which shall for all purposes be deemed an original thereof, have been duly executed by the parties hereinabove named, on the date and year first above written.

In return for the performance of this Contract by the **Contractor**, the **Owner** agrees to pay the amount of _$_____ **INCLUDING ALL APPLICABLE TAXES** through a payment schedule as described in the Contract documents and as may be modified and executed by change orders and by final quantities.

The **Contractor** agrees that this contract, as awarded, is for the following work, and understands that payment for the total work will be made on the basis of the indicated amount(s), as bid in the Proposal and attached Bidding Schedule for:

BID NO. 091120 - RIM TRAIL BRIDGE REPLACEMENT

OWNER:

GILA COUNTY BOARD OF SUPERVISORS

_____
Woody Cline, Chairman, Board of Supervisors

ATTEST:

_____
Marian Sheppard, Clerk of the Board

APPROVED AS TO FORM:

_____
Gila County Attorney's Office

CONTRACTOR:

_____
Contractor Signature

_____
Print Name

_____
Witness (If Contractor is Individual)

STATUTORY PERFORMANCE BOND (CPB-1)

PURSUANT TO TITLE 34, CHAPTER 2, ARTICLE 2 OF THE ARIZONA REVISED STATUTES

(PENALTY OF THIS BOND MUST BE 100% OF CONTRACT AMOUNT)

KNOW ALL MEN BY THESE PRESENTS:

That,_____

_____, (hereinafter called the Principal), as Principal,

and_____

(hereinafter called Surety), a corporation duly organized and existing the laws of the State of _____with its principal office in the city of _____ holding a certificate of authority to transact surety business in Arizona issued by the Director of the Department of Insurance, as Surety, are held and firmly bound unto Gila County (hereinafter called the Obligee) in the amount of (100% OF CONTRACT AMOUNT)_____ dollars ($_____), for the payment whereof, the said Principal and Surety bind themselves, and their heirs, administrator, executors, successors, and assigns, jointly and severally, firmly by these presents.

WHEREAS, the Principal has agreed to enter into a certain contract with the Obligee for: **Bid No. 091120 - RIM TRAIL BRIDGE REPLACEMENT,** which contract is hereby referred to and made a part hereof as fully and to the same extent as if copied at length herein.

NOW, THEREFORE, THE CONDITION OF THIS OBLIGATION IS SUCH, that if the said Principal shall faithfully perform and fulfill all the undertakings, covenants, terms, conditions and agreements of said contract during the original term of said contract and any extension thereof, with or without notice to the Surety, and during the life of any guaranty required under the contract, and shall also perform and fulfill all the undertakings, covenants, terms, conditions, and agreements of any and all duly authorized modifications of said contract that may hereafter be made, notice of which modifications to the Surety being hereby waived; then the above obligation shall be void, otherwise to remain in full force and effect;

PROVIDED, HOWEVER, that this bond is executed pursuant to the provisions of Title 34, Chapter 2, Article 2, of the Arizona Revised Statutes, and all liabilities on this bond shall be determined in accordance with the provisions of said Title, Chapter and Article, so the extent as if they were copied at length herein.

The prevailing party in a suit on this bond shall recover as a part of the judgment such reasonable attorneys' fees as may be fixed by a judge of the court.

Witness our hands this _____ day of _____, 2020.

_____

Pri**ncipal** **Seal**

_____ _____

Surety **Seal** **By:**

_____ _____

Agency of Record **By:**

_____ _____

Arizona Countersignature **Agency Address**

_____

Address

_____

Phone Number

STATUTORY LABOR AND MATERIALS BOND (LMB-1)

PURSANT TO TITLE 34, CHAPTER 2, ARTICLE 2 OF THE ARIZONA REVISED STATUTES

(PENALTY OF THIS BOND MUST BE 100% OF CONTRACT AMOUNT)

KNOW ALL MEN BY THESE PRESENTS:

That,_____(hereinafter called the

Principal), as Principal, and _____

(hereinafter called Surety), a corporation duly organized and existing the laws of the State of _____ with its principal office in the city of _____ holding a certificate of authority to transact surety business in Arizona issued by the Director of the Department of Insurance, as Surety, are held and firmly bound unto Gila County (hereinafter called the Obligee) in the amount of (100% of Contract Amount)_____ dollars ($_____), for the payment whereof, the said Principal and Surety bind themselves, and their heirs, administrator, executors, successors, and assigns, jointly and severally, firmly by these presents.

WHEREAS, the Principal has agreed to enter into a certain contract with the Obligee for: **Bid No. 091120 - RIM TRAIL BRIDGE REPLACEMENT,** which contract is hereby referred to and made a part hereof as fully and to the same extent as if copied at length herein.

NOW, THEREFORE, THE CONDITION OF THIS OBLIGATION IS SUCH, that if the said Principal shall faithfully perform and fulfill all the undertakings, covenants, terms, conditions and agreements of said contract during the original term of said contract and any extension thereof, with or without notice to the Surety, and during the life of any guaranty required under the contract, and shall also perform and fulfill all the undertakings, covenants, terms, conditions, and agreements of any and all duly authorized modifications of said contract that may hereafter be made, notice of which modifications to the Surety being hereby waived; then the above obligation shall be void, otherwise to remain in full force and effect;

PROVIDED, HOWEVER, that this bond is executed pursuant to the provisions of Title 34, Chapter 2, Article 2, of the Arizona Revised Statutes, and all liabilities on this bond shall be determined in accordance with the provisions of said Title, Chapter and Article, so the extent as if they were copied at length herein.

The prevailing party in a suit on this bond shall recover as a part of the judgment such reasonable attorneys' fees as may be fixed by a judge of the court.

Witness our hands this _____ day of _____, 2020.

_____

Pri**ncipal** **Seal**

_____ _____

Surety **Seal** **By:**

_____ _____

Agency of Record **By:**

_____ _____

Arizona Countersignature **Agency Address**

_____

Address

_____

Phone Number

GILA COUNTY
CONTRACT PERFORMANCE WARRANTY (CPW-1)

I, _____, representing

_____ (company name)

do hereby warranty the work performed for the:

BID NO. 091120 - RIM TRAIL BRIDGE REPLACEMENT,

for a period of **two (2) years** from completion of said work.

Said work shall be free from defects which would cause the work not to perform in its intended manner.

_____

(Officer, Partner, Owner) **Date**

Form **W-9**
(Rev. October 2018)
Department of the Treasury
Internal Revenue Service

Request for Taxpayer Identification Number and Certification

▶ Go to *www.irs.gov/FormW9* for instructions and the latest information.

Give Form to the requester. Do not send to the IRS.

Print or type. See Specific Instructions on page 3.

1 Name (as shown on your income tax return). Name is required on this line; do not leave this line blank.

2 Business name/disregarded entity name, if different from above

3 Check appropriate box for federal tax classification of the person whose name is entered on line 1. Check only **one** of the following seven boxes.

☐ Individual/sole proprietor or single-member LLC ☐ C Corporation ☐ S Corporation ☐ Partnership ☐ Trust/estate

☐ Limited liability company. Enter the tax classification (C=C corporation, S=S corporation, P=Partnership) ▶

Note: Check the appropriate box in the line above for the tax classification of the single-member owner. Do not check LLC if the LLC is classified as a single-member LLC that is disregarded from the owner unless the owner of the LLC is another LLC that is **not** disregarded from the owner for U.S. federal tax purposes. Otherwise, a single-member LLC that is disregarded from the owner should check the appropriate box for the tax classification of its owner.

☐ Other (see instructions) ▶

4 Exemptions (codes apply only to certain entities, not individuals; see instructions on page 3):

Exempt payee code (if any)

Exemption from FATCA reporting code (if any)

(Applies to accounts maintained outside the U.S.)

5 Address (number, street, and apt. or suite no.) See instructions.

Requester's name and address (optional)

6 City, state, and ZIP code

7 List account number(s) here (optional)

Part I Taxpayer Identification Number (TIN)

Enter your TIN in the appropriate box. The TIN provided must match the name given on line 1 to avoid backup withholding. For individuals, this is generally your social security number (SSN). However, for a resident alien, sole proprietor, or disregarded entity, see the instructions for Part I, later. For other entities, it is your employer identification number (EIN). If you do not have a number, see *How to get a TIN*, later.

Note: If the account is in more than one name, see the instructions for line 1. Also see *What Name and Number To Give the Requester* for guidelines on whose number to enter.

Social security number

☐☐☐ – ☐☐ – ☐☐☐☐

or

Employer identification number

☐☐ – ☐☐☐☐☐☐☐

Part II Certification

Under penalties of perjury, I certify that:

1. The number shown on this form is my correct taxpayer identification number (or I am waiting for a number to be issued to me); and
2. I am not subject to backup withholding because: (a) I am exempt from backup withholding, or (b) I have not been notified by the Internal Revenue Service (IRS) that I am subject to backup withholding as a result of a failure to report all interest or dividends, or (c) the IRS has notified me that I am no longer subject to backup withholding; and
3. I am a U.S. citizen or other U.S. person (defined below); and
4. The FATCA code(s) entered on this form (if any) indicating that I am exempt from FATCA reporting is correct.

Certification instructions. You must cross out item 2 above if you have been notified by the IRS that you are currently subject to backup withholding because you have failed to report all interest and dividends on your tax return. For real estate transactions, item 2 does not apply. For mortgage interest paid, acquisition or abandonment of secured property, cancellation of debt, contributions to an individual retirement arrangement (IRA), and generally, payments other than interest and dividends, you are not required to sign the certification, but you must provide your correct TIN. See the instructions for Part II, later.

Sign Here **Signature of U.S. person ▶** **Date ▶**

General Instructions

Section references are to the Internal Revenue Code unless otherwise noted.

Future developments. For the latest information about developments related to Form W-9 and its instructions, such as legislation enacted after they were published, go to *www.irs.gov/FormW9*.

Purpose of Form

An individual or entity (Form W-9 requester) who is required to file an information return with the IRS must obtain your correct taxpayer identification number (TIN) which may be your social security number (SSN), individual taxpayer identification number (ITIN), adoption taxpayer identification number (ATIN), or employer identification number (EIN), to report on an information return the amount paid to you, or other amount reportable on an information return. Examples of information returns include, but are not limited to, the following.

- Form 1099-INT (interest earned or paid)
- Form 1099-DIV (dividends, including those from stocks or mutual funds)
- Form 1099-MISC (various types of income, prizes, awards, or gross proceeds)
- Form 1099-B (stock or mutual fund sales and certain other transactions by brokers)
- Form 1099-S (proceeds from real estate transactions)
- Form 1099-K (merchant card and third party network transactions)
- Form 1098 (home mortgage interest), 1098-E (student loan interest), 1098-T (tuition)
- Form 1099-C (canceled debt)
- Form 1099-A (acquisition or abandonment of secured property)

Use Form W-9 only if you are a U.S. person (including a resident alien), to provide your correct TIN.

If you do not return Form W-9 to the requester with a TIN, you might be subject to backup withholding. See What is backup withholding, *later.*

Cat. No. 10231X Form **W-9** (Rev. 10-2018)

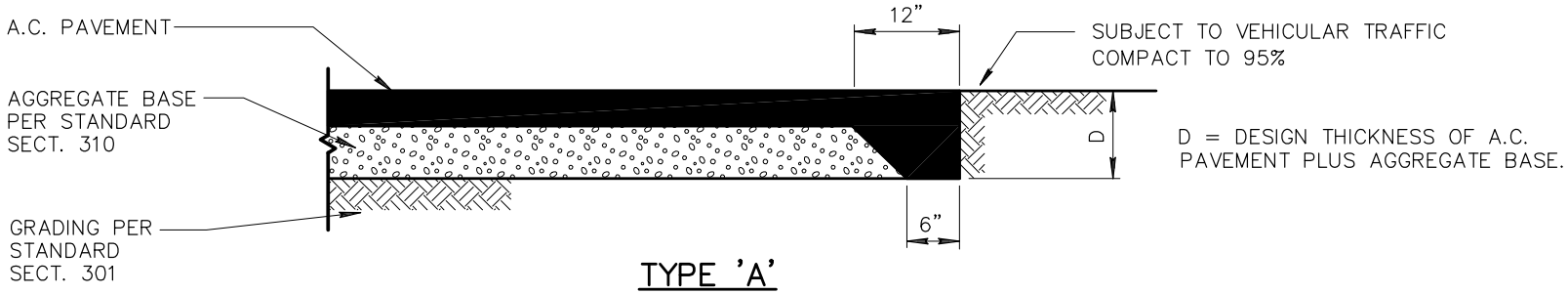

TYPE 'A'

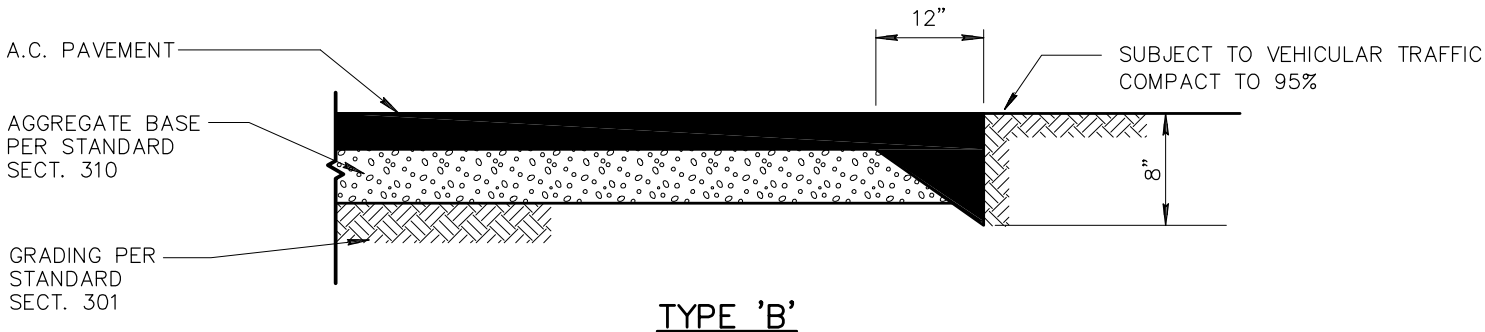

TYPE 'B'

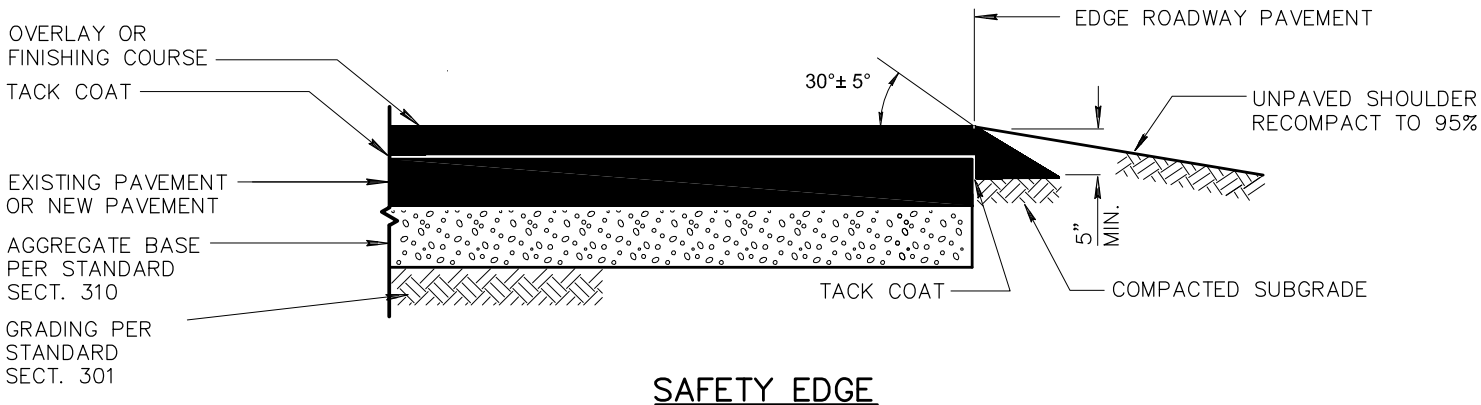

SAFETY EDGE

DETAIL NO.		STANDARD DETAIL		DATE	DETAIL NO.
201	MARICOPA ASSOCIATION of GOVERNMENTS	ENGLISH	ASPHALT PAVEMENT EDGE DETAILS	01-01-2014	201

NO	DESCRIPTION OF REVISIONS	MADE BY	DATE
1	MODIFIED TABLE MEASUREMENT FORMAT	RLF	9/04
2	NEW GENERAL NOTE #2; RENUMBERED ALL OTHER NOTES	RLF	5/12
3	ADDED "TYPICAL FENCE LOCATION" VIEW	RLF	5/12
4			

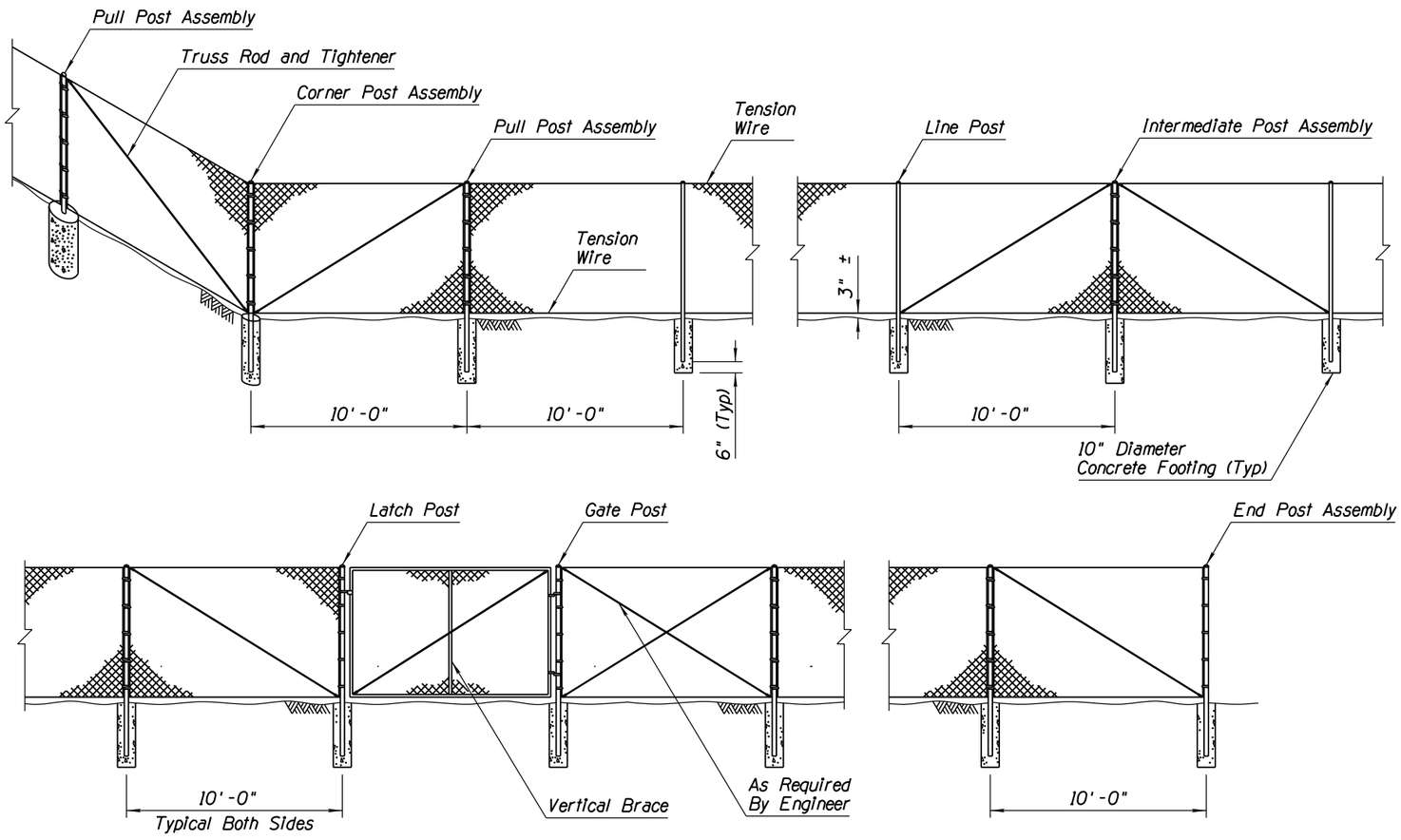

TYPICAL CHAIN LINK FENCE INSTALLATION - TYPE 1 SHOWN

①

TYPICAL POST DIMENSIONS								
Fabric Height (In)	Corner, End, Intermediate, Gate, Latch and Pull Posts				Line Posts			
	Length (Ft-In)	Round	Roll Formed (In)		Length (Ft-In)	Round		Roll Formed
		(OD) (In)	⌞	□		(OD) (In)	H-Section (In)	□ (In)
36	6-0	2.375	3.50 x 3.50	2.25 x 1.70	5-6	1.900	1.875 x 1.625	1.875 x 1.625
48	7-0	2.375	3.50 x 3.50	2.25 x 1.70	6-6	1.900	1.875 x 1.625	1.875 x 1.625
60	8-0	2.375	3.50 x 3.50	2.25 x 1.70	7-6	1.900	1.875 x 1.625	1.875 x 1.625
72	9-0	2.375	3.50 x 3.50	2.25 x 1.70	8-6	1.900	1.875 x 1.625	1.875 x 1.625
Over 72	Height +3-0	2.875	3.50 x 3.50	2.50 x 2.50	Height +2-6	2.375	2.250 x 2.000	1.875 x 1.625

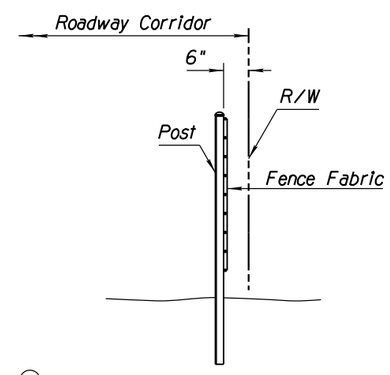

③

TYPICAL FENCE LOCATION

GENERAL NOTES

1. Posts shall be round, H-section, or roll-formed and shall conform to the nominal dimensional requirements shown on the plans. Dimensional tolerances for all shapes shall be according to ASTM A500. In addition, the material of which posts are fabricated shall have a nominal thickness, before galvanizing, of not less than 0.111" for line posts and 0.130" for terminal posts.

② 2. Chain link fabric shall be attached on the side of the line posts away from the main roadway.

3. Chain link fabric shall be either zinc-coated or aluminum-coated steel wire fence fabric. Zinc-coated steel fabric shall conform to the requirements of ASTM A392, Class 1 coating. Aluminum-coated steel fabric shall conform to the requirements of ASTM A491, with a minimum weight of coating of 0.40 ounce per square foot of wire surface area. Fabric shall be 11 gauge for all fence fabric 60" or less in height and shall be 9 gauge for fabrics greater than 60" in height.

4. Tension wires shall be 7 gauge (0.177" diameter) coil spring steel wire with a minimum tensile strength of 75,000 PSI and shall be zinc-coated or aluminum-coated.

5. Truss rods shall be 3/8" diameter adjustable rods. Truss tighteners shall have a strap thickness of not less than 1/4".

6. Stretcher bars shall be 3/16" x 3/4" steel flat bars. Stretcher bar bands shall be 1/8" x 1" preformed steel bands.

7. Bottom tension wire shall be 3" from top of crown on concrete footings.

8. Intermediate post assemblies shall be spaced at 500' intervals or midway between pull posts when the distance between such posts is less than 1,000' and more than 500'.

APPROVED FOR DESIGN	STATE OF ARIZONA DEPARTMENT OF TRANSPORTATION ROADWAY STANDARD DRAWINGS	REV. 5/12
APPROVED FOR DISTRIBUTION	FENCE CHAIN LINK TYPE 1	DRAWING NO. C-12.20 Sheet 1 of 3

normal.tbl

NO	DESCRIPTION OF REVISIONS	MADE BY	DATE
1	MODIFIED TABLE MEASUREMENT FORMAT	RLF	9/04
2	MODIFIED DIMENSION TEXT	RLF	10/05
3	DELETED DIMENSION	RLF	10/05
4	REVISED GENERAL NOTE	RLF	5/12

GENERAL NOTES

1. Barbed wire for use with Type 2 chain link fence shall be 12 gauge steel wire with 4 point 14 gauge barbs spaced 5" apart and shall be either zinc-coated or aluminum-coated. Zinc-coated steel wire shall conform to the requirements of ASTM A121, Class 1 coating. Aluminum-coated steel wire shall conform to the requirements of ASTM 1585, Type 1, Class 1 coating.
2. Barbed wire support arm shall be of the type shown on the plans, shall be fabricated from commercial quality steel, and shall be zinc-coated in accordance with the requirements of AASHTO M111.
3. Bottom tension wire shall just clear top of crown on concrete footings.
4. For details and notes not shown, see chain link fence, Type 1, Sheet 1 of 3.
4. 5. See Sheet 1 of 3 for typical fence location.

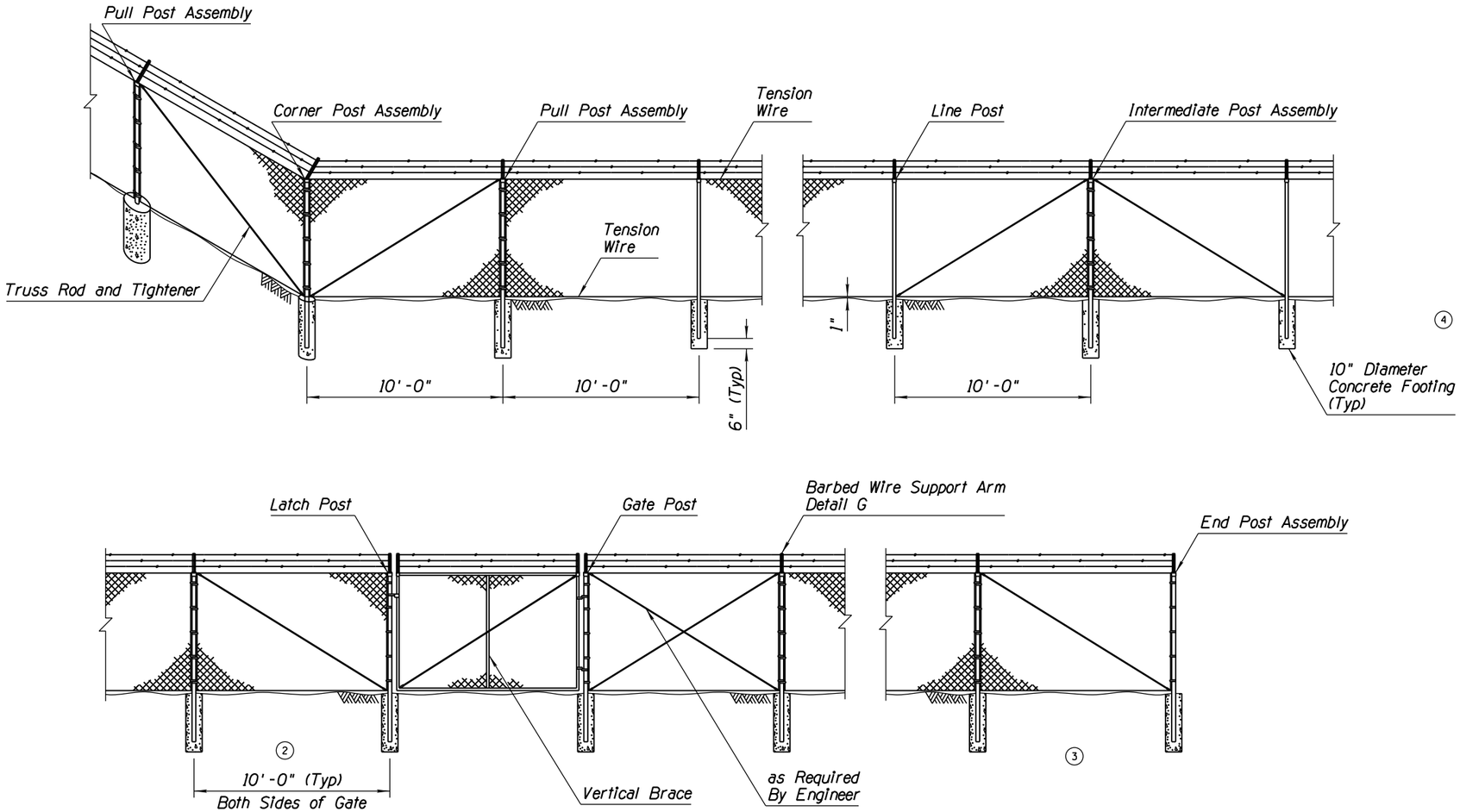

TYPICAL CHAIN LINK FENCE INSTALLATION - TYPE 2 SHOWN

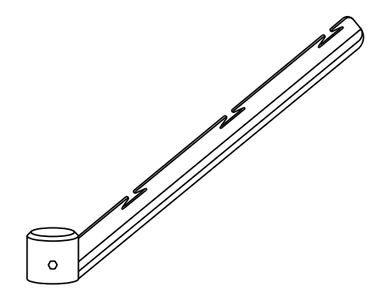

DETAIL G
BARBED WIRE SUPPORT ARM

1

TYPICAL POST DIMENSIONS								
Fabric Height (In)	Corner, End, Intermediate, Gate, Latch and Pull Posts				Line Posts			
	Length (Ft-In)	Round	Roll Formed		Length (Ft-In)	Round	H-Section (In)	Roll Formed
		(OD) (In)	⊔ (In)	□ (In)		(OD) (In)		□ (In)
72	8-6	2.375	3.50 x 3.50	2.50 x 2.50	8-0	1.900	1.875 x 1.625	1.875 x 1.625

APPROVED FOR DESIGN	STATE OF ARIZONA DEPARTMENT OF TRANSPORTATION ROADWAY STANDARD DRAWINGS	REV. 5/12
APPROVED FOR DISTRIBUTION	FENCE CHAIN LINK TYPE 2	DRAWING NO. C-12.20 Sheet 2 of 3

normal.tbl

NO	DESCRIPTION OF REVISIONS	MADE BY	DATE
1	MODIFIED TABLE MEASUREMENT FORMAT	RLF	9/04
2	MODIFIED DIMENSION TEXT	RLF	10/05
3	MOVED FENCE LOCATION VIEW TO SHEET 1 OF 3	RLF	5/12
4			

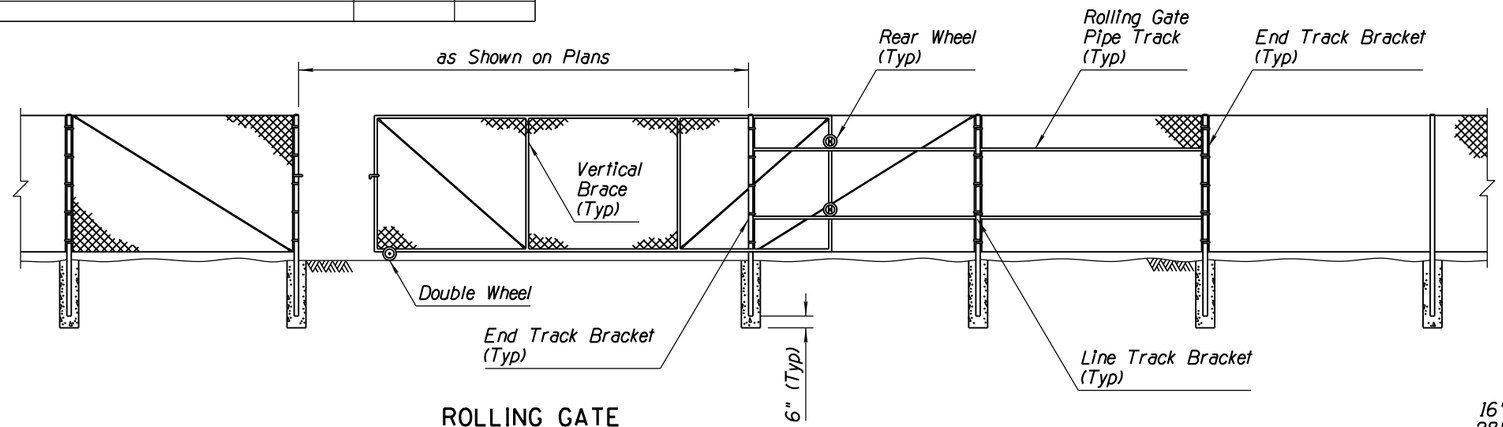

ROLLING GATE

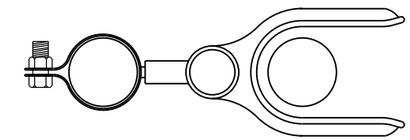

SECTION A-A
DOUBLE GATE LATCH ASSEMBLY

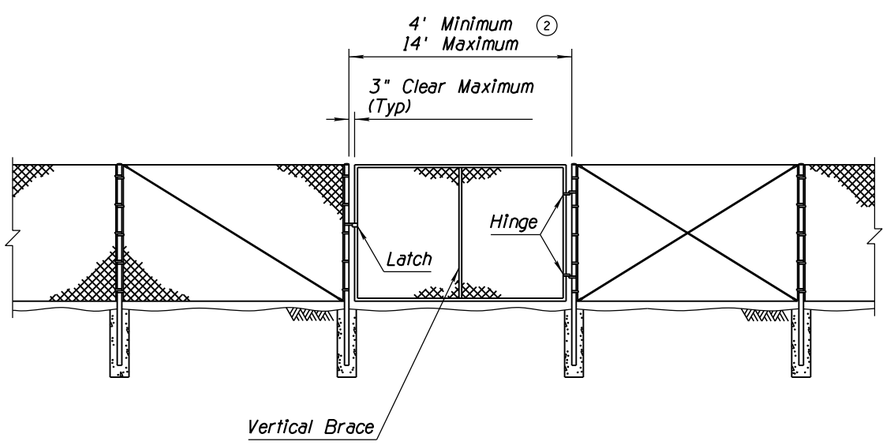

SINGLE GATE

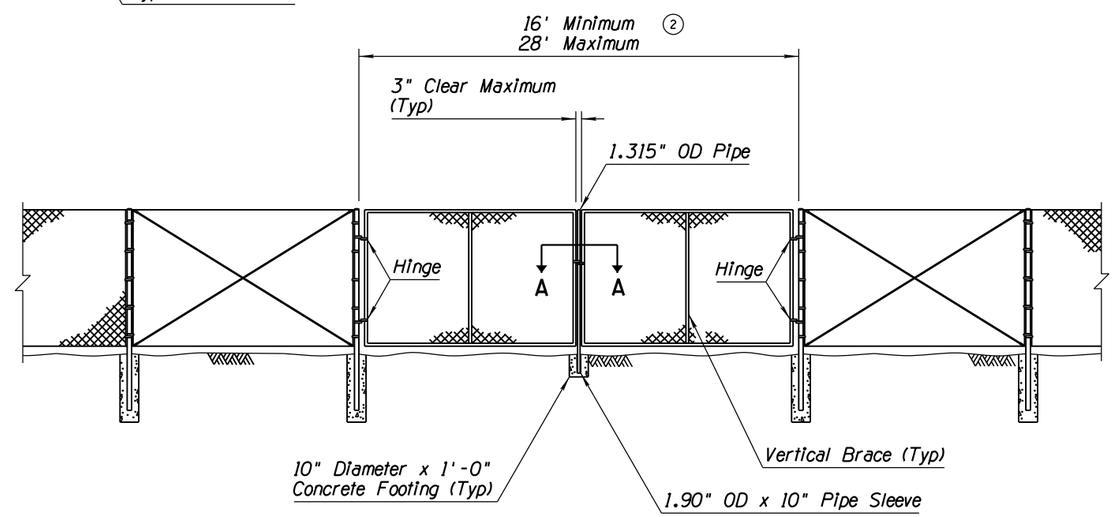

DOUBLE GATE

1

TYPICAL GATE DIMENSIONS

SINGLE AND DOUBLE SWING GATES						ROLLING GATES			
Gate Width (Ft) 6' Ht or Less	Vertical Braces	Gate Post Size OD (In)	Gate Width (Ft) Over 6' Ht	Vertical Braces	Gate Post Size OD (In)	Gate Width (Ft)	Number of Equally Spaced Vertical Braces	Tension Rods Per Braced Panel	Gate Post Size OD (In)
3 to 8	0	2.875	3 to 8	0	2.875	6 to 13	1	0	2.875
8 to 16	1	4.000	8 to 16	1	4.000	13 to 16	1	1	2.875
16 to 18	2	4.000				16 to 21	2	1	2.875
						21 to 27	2	1	2.875
						28 and Larger	3	1	2.875

3

GATES FOR CHAIN LINK FENCE - TYPE 1 SHOWN
(Type 2, With Barbed Wire Typical)

APPROVED FOR DESIGN	STATE OF ARIZONA DEPARTMENT OF TRANSPORTATION ROADWAY STANDARD DRAWINGS	REV. 5/12
APPROVED FOR DISTRIBUTION	FENCE CHAIN LINK GATES	DRAWING NO. C-12.20 Sheet 3 of 3

normal.tbl

Final
Geotechnical and Foundation Report
Bridge No. 7881 Replacement
Upper East Verde River
Rim Trail Subdivision
Gila County, Arizona
RAMM Project No. G24817

Registered Professional Engineer (Civil)
CERTIFICATE NO.
10971
KENNETH L.
RICKER
Date Signed 5-4-18
ARIZONA U.S.A.

Expires 3/31/2019

For:
Kimley-Horn & Associates, Inc.
7740 North 16th Street, Suite 300
Phoenix, Arizona 85020

◆◆◆

By:
Ricker • Atkinson • McBee • Morman & Associates, Inc.
2105 South Hardy Drive, Suite 13
Tempe, Arizona 85282

RICKER • ATKINSON • McBEE • MORMAN & ASSOCIATES, INC.
Geotechnical Engineering • Construction Materials Testing

R·A·M·M

Kimley-Horn & Associates, Inc.
7740 North 16th Street, Suite 300
Phoenix, Arizona 85020

May 4, 2018

Attention: David J. Leistiko, P.E.

Subject: Final Geotechnical and Foundation Report
Bridge No. 7881 Replacement
Upper East Verde River
Rim Trail Subdivision
Gila County, Arizona

RAMM Project No. G24817

Attached to this letter is the Final Geotechnical and Foundation Report for the Bridge No. 7881 Replacement over Upper East Verde River along Bridge Road in the Rim Trail Subdivision, in Gila County, Arizona.

The attached report was prepared based on project and site data available at this time and was prepared in a manner and to the standards of local geotechnical engineering practice, AASHTO and Gila County. Our services did not include evaluations for the presence of hazardous materials, area subsidence resulting from groundwater withdrawal, or other geologic hazards.

If you have any questions, please do not hesitate to call.

Respectfully submitted,
RICKER • ATKINSON • MCBEE • MORMAN & ASSOCIATES, INC.

Registered Professional Engineer (Civil)
CERTIFICATE NO.
10971
KENNETH L.
RICKER
Date Signed 5-4-18
ARIZONA U.S.A.

Expires – 3/31/2019

By: Andrew J. Schirmer AND Kenneth L. Ricker, P.E.

/dh
Copies to: Email (dave.leistiko@kimley-horn.com)

2105 South Hardy Drive, Suite 13, Tempe, AZ 85282-1924 • Telephone (480) 921-8100 • Facsimile (480) 921-4081
www.rammeng.com

TABLE OF CONTENTS

REPORT ---------- PAGE

Introduction 1

Proposed and Existing Construction 1

Site Conditions 1

Geologic Setting 2

Field Explorations 3

Laboratory Analysis 3

Subsurface Condition 4

Foundation Recommendations

General Subsurface Profile 5

Generalized Bedrock Profile 5

Spread Footings Design-Foundations on Overburden Soils at East Abutment 6

Spread Footings Design-Foundations on Bedrock at West Abutment 8

Drilled Shafts 9

Shoring Considerations 10

Seismic Considerations 11

Lateral Earth Pressure 12

Backfill Placement 13

Drainage 13

Lateral Capacity 13

Rock Properties Strong Rock 14

References 15

APPENDIX A - FIELD EXPLORATION

Site Plan A1-1

Cross Section A1-3

Soil Legend A2

Test Boring Logs A3

Registered Professional Engineer (Civil)
CERTIFICATE NO.
10971
KENNETH L.
RICKER
Date Signed 5-4-16
ARIZONA U.S.A.

Expires 3/31/2017

APPENDIX B - LABORATORY ANALYSIS

Compression B1

Direct Shear B2

Percent Passing No. 200 Sieve B4

pH, Minimum Resistivity B5

Unit Weight, Unconfined Compressive Strength of Rock Cores B6

APPENDIX C - FACTORED NET BEARING RESISTANCE CHARTS AND AXIAL RESISTANCE OF DRILLED SHAFTS

Factored Net Bearing Resistance Chart C1

Factored Axial Resistance of Drilled Shafts C3

APPENDIX D - CORE PHOTOS

REPORT

R·A·M·M

INTRODUCTION

This report presents the results of our geotechnical engineering services and foundation recommendations for Bridge No. 7881 Replacement over Upper East Verde River along Bridge Road in the Rim Trail Subdivision, in Gila County, Arizona. The scope of our services included reviewing available geotechnical data and performing a field exploration program, laboratory analysis and geotechnical engineering evaluation, analysis and recommendations. We would be pleased to discuss with you any additional recommendations you may require. In addition, we are available to review project specifications and plans for conformance.

This firm should be notified for additional evaluation and recommendations should the project design parameters (structure types, sizes, structural loads, etc.) change, and/or where site use or conditions encountered during construction differ from those presented herein.

PROPOSED AND EXISTING CONSTRUCTION

The existing bridge serves as connection between Forest Service Road NF-32 and Rim Trail Road crossing the Upper East Verde River approximately 14 miles north of Payson, Arizona. Residential properties in the Rim Trail Subdivision are located on both banks of the river and on either end of the bridge along Bridge Road. The existing single span Bridge No. 7881will be removed and replaced with a similar sized, single span bridge and Bridge Road will remain unpaved. The new single span, 12-foot wide steel girder or concrete slab bridge will be installed to facilitate pedestrian traffic over Upper East Verde River and will be supported on spread footings at each abutment with an embedment depth of 6 feet below current elevation. Drilled shafts with rock sockets may be used as an alternative to support bridge abutments. Gabions will be installed at each abutment to reduce the scour potential.

SITE CONDITIONS

Bridge Road is an existing one-lane unpaved road which connects NF-32 to Rim Trail Road. Bridge Road cuts into the existing exposed slopes and following the natural elevation as it drops towards the river bank elevation. On both ends of the bridge, the road moves away from Verde River, and the shoulders slope down towards the river. Bedrock is exposed to the north of the west abutment and in much of the bottom of the river to the north. Water was present in the river bottom at the time of our field explorations and varied from approximately 6 to 18 inches in depth, 8 feet-5 inches below the top of the bridge deck and was flowing to the south. The shoulders were

covered with gravel and light leaf litter and other low vegetation. In the area east of the bridge, the shoulders shrink significantly and are bounded by fencing along the property lines. This area has sparse vegetation up to the crest of the river banks and had low vegetation.

Geologic Setting:

The site is located along the north edge of the boundary between the Colorado Plateau and the Transition Zone ranges, in the upper slope of the Mogollion Rim. The East Verde River and tributaries have incised through the overlying Permian to Pennsylvanian units and into the site units consisting of Lower Mississippian to Upper Devonian sedimentary units.

Exposed bedrock units were identified intermittently along the west bank of the East Verde River active riverbed and upslope east of Rim Trail Road. Farther upslope, bedrock transitions from Devonian siltstone/mudstone to Mississippian (Redwall) limestones. Alluvial deposits exist between existing outcrops and are composed primarily of detrital sediments from parent sandstone and limestone units upstream at the rivers headwaters. Alluvial sediments greatly range in size with cobbles and large boulders common. Overburden consisted of colluvial deposits overlying bedrock exposures.

Bedrock exposures at the site consist of Devonian era siltstone/mudstone shales of the upper Martin formation. The unit is fine grained, highly fissile and fine bedded, friable and red brown in color when weathered and massive and dark red in color when fresh faced. Twelve to twenty-four-inch-thick resistant lenses form blocky ledges at 4 to 8-foot spacings. At the approximate elevation of the west bridge abutment, lenses of green shale and lenses of cemented calcareous nodules become increasingly present. Green shale bands range in thickness from 1/16 inch to 3 inches and nodule lenses range from 3 inches to 24 inches thick and becoming thicker with depth into the unit. Green banded sections weather to light green to whitish gray.

Deposition and banding occur sub-horizontally with a 5° dip due east. The unit is weathered to a thinly bedded and shaly sloped surface which has obliterated most fractures or joint expressions; however, the resistant units were found to contain few to occasional jointing widely spaced. Joints were sub-vertical, typically trending between 30° to 45° northwest and dipping 80° to 85° to the south.

FIELD EXPLORATIONS

Subsurface conditions along the proposed bridge replacement were explored by drilling Test Borings 1 and 2 to depths of 21.5 to 33.0 feet, respectively. The locations of the test borings are shown on the Site Plan in Appendix A. The test borings were drilled with a truck-mounted CME 55 drill rig using 4-inch diameter solid stem augers, 8-inch diameter hollow-stem augers and rotary wash using a NQ 5-foot long double tube core barrel with a diamond impregnated bit. The drilling equipment and crew were provided by Wildcat Drilling, Inc. The test boring locations were determined in the field by our field geologist based on the Test Boring Plan and as shown on the Site Plan in Appendix A. During the field explorations, representative undisturbed and disturbed soil samples were obtained and all recovered bedrock cores were placed in core boxes. The test borings were logged and soils and bedrock cores field-classified by our field geologist, who also directed the drill crew. Representative undisturbed and disturbed soil samples were obtained by driving a 3-inch diameter, ring-lined, open-end sampler and by driving a standard split spoon sampler, respectively, driven into the soil with an automatic 140-pound hammer dropping 30 inches. The results of the test borings are presented in Appendix A.

LABORATORY ANALYSIS

Representative samples obtained during the field exploration were subjected to the following laboratory tests:

Type of Test	Type of Sample	Number of Samples Tested
Direct Shear	Undisturbed	2
Unconfined Compressive Strength **	Bedrock Core	6
Sieve Analysis & Atterberg Limits	Representative	3
pH, Minimum Resistivity	Representative	3
Compression	Undisturbed	1
Moisture Content/Dry Density *	Undisturbed	4
Moisture Content *	Split Spoon/ Disturbed	2
Unit Weight **	Bedrock Core	6

* Reported in the Test Boring Logs.
** Reported in the Unconfined Compression Strength Lab Test (Page B9)

The results of all the laboratory analysis are presented in Appendix B. Due to the presence of gravel, cobbles and boulders, undisturbed and representative ring samples were limited. Samples were reviewed and considerations were made to the results.

SUBSURFACE CONDITIONS

The subsurface conditions encountered were somewhat variable due to the past meandering of the river and the presence of shallow bedrock which deepens to the south and east. The results of the field explorations are presented in Appendix A.

The near surface soils encountered in Test Boring 1 and extending to a depth of 6.0 feet consisted of gravelly sandy clay with trace to some cobbles and occasional boulders, increasing with depth. These soils were firm to very stiff, had medium plasticity fines and were damp to very damp. The near surface soils encountered in Test Boring 2 and extending to a depth of 12.0 feet consisted of silty gravelly sand with cobbles and occasional boulders, increasing with depth. These soils were medium dense to dense, had non-plastic fines and were damp. Surface soils at Test Boring 1 are representative of colluvial deposits and weathered bedrock overburden while soils at Test Boring 2 are representative of alluvial deposits and former channel banks or bars. This is consistent with the current topography and surrounding geologic profile.

The site soils were underlain by slightly to lightly weathered mudstone/siltstone shale (M_{US}) bedrock which was strong to very strong, hard, very thinly bedded and slightly to heavily calcareously banded, increasing with depth. This unit was lightly jointed with 3 to 12-inch separation between joints. Joint orientation was random and ranged from 5 to 10 degrees, however, typically occurred sub-horizontally along bedding planes. Most joints were lightly weathered to decomposed which were typically between 0.5 to 6.0 inches thick occasionally within the top 9.0 to 9.5 feet of the unit. Green shale beds, inclusions and nodules (detrital green shale) occur randomly throughout the unit ranging between ½ inch to 8 inches thick and increasing in frequency with depth.

Banding increases to a transition between shale and limestone, occurring between depths of 15.5 to 21.5 feet (maximum depth of exploration) in Test Boring 1 and depths of 22.0 to 26.0 feet in Test Boring 2. This transition zone (M_{UT}) is slightly weathered to unweathered, very strong, hard to very hard, heavily calcareously banded, occasionally containing small voids, and occasionally jointed. Joints occur sub-horizontally along bedding plans and one joint at 70 degrees was identified. Joints appear to be healed with calcareous infill.

In Test Boring 2 underlying the transition zone and continuing to a depth of 33.0 feet (maximum depth of exploration), calcification becomes predominant and the bedrock can be classified as an

interbedded limestone (M_{UL}). This unit is very strong, very hard, very thinly bedded and occasionally jointed along bedding planes. Joints appear to be healed with calcareous infill. Dendritic staining occasionally occurs throughout the unit.

Test Boring	Location	Competent Bedrock Depth (ft)
1	West Abutment	6.0
2	East Abutment	12.0

Groundwater was encountered at a depth of 16.0 feet in Test Boring 1 and 8.5 feet in Test Boring 2 below existing ground surface elevations at the time of exploration. Seasonal variations may affect groundwater elevations during construction.

FOUNDATION RECOMMENDATIONS

Generalized Subsurface Profile:

Location		Depth Range (ft)	Dry Density (pcf)	SPT (N)
West Abutment	Gravelly Sandy Clay	0 – 2	105	5
	Gravelly Sandy Clay	2 – 6	100	30
	Bedrock	6 – 21.5		
East Abutment	Silty Gravelly Sand	0 – 2	103	9
	Silty Gravelly Sand	2 – 8.5	97	19
	Silty Gravelly Sand	8.5 – 12	28*	25
	Bedrock	12 – 33		

* Submerged dry density

Generalized Bedrock Profile:

Location	Unit	Depth Range (ft)	RMR (Joint Adjusted) *	Bedrock Class	Uniaxial Compressive Strength (ksf)	Elastic Modulus Reduction (E_m/E_i)	Joint Reduction Factor α_E
West Abutment	M_{US}	6 – 15.5	17	V-Poor	700	0.10	0.55
	M_{UT}	15.5 – 21.5	69	II-Good	775	0.70	0.85
East Abutment	M_{US}	12 – 22	17	V-Poor	700	0.10	0.55
	M_{UT}	22 – 26	69	II-Good	775	0.70	0.85
	M_{UL}	26 – 33	77	II-Good	1300	1.00	1.00

* Section 10.4.6.4 AASHTO LRFDUS-7

The above profiles represent approximate conditions and do not represent the exact soils/bedrock properties for each test boring within a profile. Soil parameters trended on the conservative side to account for variation in existing conditions.

Based on our review of cores and overall geologic profile, bedrock appears more competent than expressed by percent core recovery and RQD. As a result, current RMR ratings may not reflect this increased competency. See Appendix D for core photos. Most breaks observed in cores retrieved correlate to mechanical breaks along bedding planes vs jointing.

Spread Footing Design – Foundations on Overburden Soils at East Abutment:

Spread footings will be constructed at an embedment depth of 6.0 feet below existing grade surface elevations. At the east abutment, the spread footing will be supported on existing subgrade soils overlying shallow bedrock at 12.0 feet.

The Factored Bearing Resistance Charts for the East Bridge Abutment are based on "AASHTO LRFD Bridge Design Specifications, Seventh Edition, 2014" and "FHWA 2006". Following the methods described in Section 10.6.3.1 of AASHTO LRFDUS-7 (2014), the Factored Net Bearing Resistance (q_R) for the Strength Limit State was calculated using the nominal bearing resistance (q_n) as determined by Section 10.6.3.1.2a and bearing resistance factor (φ_b) from Table 10.5.5.2.2. Density values were averaged from test data or interpreted and estimated from local test borings through similar soils in similar conditions. Where not available through testing, soil friction angles for granular soils are determined using Figure and Chart 10.4.6.2.4-1 from AASHTO LRFDUS-7 (2014). For variation factors, soil parameters were on the conservative side. The Strength Limit State corresponds to the steeply rising dashed line on the Factored Net Bearing Resistance charts.

Spread Footing – Strength Limit State Design Parameters
(AASHTO LRFD (2014) Method)

Structure	Resistance Factor φ_b	Embedment Depth (Avg.) D_f (ft)	Footing Length L (ft)	Submerged Dry Density γ (pcf)	Soil Friction Angle Φ_f (deg)	Cohesion C (psf)
East Abutment	0.45	6.0	16	28	43	0

Due to inability to obtain undisturbed deeper ring samples resulting from the presence of gravel and cobbles, direct shear tests were tested in near surface soils providing results ranging from 42° to 46° for friction angle (Φ_f) and 0 psf for cohesion (C). Friction Angles for the same soils, and as

determined from Table and Figure 10.4.6.2.4-1 from AASHTO LRFDUS-7 (2014) ranged from 35° to 43° corresponding to reliable test data and better represent the soils encountered for this investigation. Due to the variability of laboratory test data and the granular nature of the sampled soils, friction angels were adjusted to correspond to anticipated conditions and cohesion was estimated. Backfill, if used is estimated to have a friction angle of 32°.

A modified Schmertmann method presented in Section 8 of FHWA (2006) was used to produce the family of settlement curves representing the Service Limit State for a given settlement. These curves are presented on the Factored Net Bearing Resistance charts and were developed using the parameters listed on the following table.

Spread Footing – Service Limit State Design Parameters
(FHWA (2006) – Schmertmann Method)

Structure	Soil Type	Depth (ft)	Sub Density (pcf)	SPT Count (N)	Corrected SPT ($N1_{60}$)	Elastic Modulus (E_s) E_s x $N1_{60}$
East Abutment	Backfill	0-6	53	20	43-45	4
	SM/GM	6-8.5	34	19	39	7
	SM/GM	8.5-12	28	25	49-58	10
	Bedrock	12-33	-	-	-	-

Note:
- Values estimated and extrapolated from conditions at bottom of test borings, adjacent test borings within the profile, and Elastic Theory Design.

The attached Factored Net Bearing Resistance Charts (see Appendix C) for the East Bridge Abutment were developed from a combination of the above equations depict the settlement estimations for footing widths vs loads. The steeply rising family of curves represent estimated settlement per the Service Limit State and the dashed horizontal line depicts the factored Strength Limit State for bedrock at the bearing depths.

Failure conditions shall be evaluated as applicable using a conservative resistance factor of 0.85 for sliding, and a passive earth pressure resistance factor of 0.5, as taken from Table 10.5.5.2.2-1. Failure by sliding must be evaluated following the procedures in Section 10.6.3.4. Eccentric loading shall follow the guidelines and limitations presented in Section 10.6.4.2.

Laboratory tests indicate the potential for collapse of the near surface and deeper soils. All foundations shall be designed to withstand settlement ranges as determined by the Factored Net Bearing Resistance charts provided. The collapsible potential of the subsurface soils was

evaluated, and considerations were made to the moisture sensitive soils. Proper drainage should be incorporated and should conform to the Drainage section of this report.

Spread Footing Design – Foundations on Bedrock at West Abutment:

The spread footing at the west abutment will be constructed at the existing soil to bedrock contact at 6.0 feet below existing ground surface. The Factored Bearing Resistance Charts for the West Bridge Abutment are based on "AASHTO LRFD Bridge Design Specifications, Seventh Edition, 2014" and "AASHTO LRFD Bridge Design Specifications, Sixth Edition, 2012". Strength Limit State design per AASHTO LRFDUS-6 (2012) Section 10.6.3.2 refers to the semi-empirical procedure developed by Carter & Kulhawy (1988). The procedure relies on the unconfined compressive strength and quality of bedrock based on the RMR system (Table 10.4.6.4-1 and adjusted by Table 10.4.6.4-2). Per Carter & Kulhawy (1988), the ultimate bearing capacity may be taken as:

$$q_{ult} = (\sqrt{s} + (m \sqrt{s} + s)^{0.5}) \, q_u$$

in which:

s , m = Empirically determined strength parameters based on the RMR system (Table 10.4.6.4-4, LRFDUS-6)

q_u = Uniaxial compression strength (ksf)

Assuming averaged bedrock parameters below bearing depth, footings embedded a minimum of one foot into competent bedrock, and using the above equation the ultimate bearing capacity for footings for the west bridge abutment is 6.2 ksf. Using a value of 0.45 for resistance factors of footings on bedrock from Table 10.5.5.2.2-1, a Strength limit state bearing resistance value of 2.79 ksf for bedrock may be used.

Following the methods described in Section 10.4.6.4 of AASHTO LRFDUS-6 (2012) for Service Limit State design, lenses of highly weathered or decomposed jointed strata do not meet the criteria for fair or better according to the Geomechanics Classification System, and so are subject to analysis of elastic settlement per Section 10.6.2.4.4. The elastic settlement of footings shall be taken as:

$$P = q_o (1 - v^2) \frac{B I_p}{144 E_m} \qquad (10.6.2.4.4\text{-}3)$$

in which:

P = Elastic settlement (in)

q_o = Applied vertical stress at base of loaded area (ksf)

v = Poisson's Ratio (dim) from Table C10.4.6.5-2

B = Width of footing (ft)

I_p = Influence coefficient to account for rigidity and dimensions of footing (dim)

E_m = Rock mass modulus (ksi) from 10.4.6.5

From the above equation, settlement of the piers are as follows:

Location	Minimum Bottom of Footing Elevation*	Footing Size (ft)	Applied Vertical Stress (ksf)		Estimated Elastic Settlement (in)
	Proposed		Service	Strength	
West Abutment	5593	16 x 7	1.68	2.22	0.008

* Assuming existing surface elevation of 5600 feet.

Bedrock parameters trended on the conservative side to account for variation in existing conditions, and therefore, a maximum value of 0.5 inches should be considered for all cases. Bearing resistance for Service Limit State conditions for bedrock are estimated from Table C10.6.2.6.1-1. To be conservative and to account for existing conditions, values for "medium hard rock" shall be used. A recommended value of 20 ksf bearing resistance exceeds the vertical stresses provided, and should be sufficient as bearing material assuming the following criteria are met:

1) All footing excavations must be advanced to a minimum of one foot into competent bedrock.
2) Embedment elevations must be flat, uniform, clean and clear of any loose materials.
3) Footing depths must be free of any highly decomposed zones or highly weathered zones.

The attached Factored Net Bearing Resistance Charts (see Appendix C) for the West Bridge Abutment were developed from a combination of the above equations depict the settlement estimations for footing widths vs loads. The steeply rising family of curves represent estimated settlement per the Service Limit State and the dashed horizontal line depicts the factored Strength Limit State for bedrock at the bearing depths.

Drilled Shafts:

As an alternative, drilled shafts with rock sockets may be used in support of the proposed bridge East and West Abutments. The design of drilled shafts founded in bedrock and used for support

of the proposed bridge replacement over East Verde River are based on the procedures presented in "AASHTO LRFD Bridges Design Specifications, Sixth Edition, 2014 (LRFDUS-7) Estimation of Drilled Shaft Resistance in Bedrock". Design for strength limit state was limited to skin friction only, whereas design for strength limit state used a combination of skin friction and tip resistance. Scour is estimated to be countered by gabion installations at all locations.

Type	Resistance Factors		Non-Redundant
Soil	Sand	Side	0.44
Soil	Clay	Side	0.36
Bedrock	Bedrock	Side	0.40
		Tip	0.40

Settlement values for overburden based on skin friction values only and settlement values for bedrock based on combined side and tip resistance per AASHTO (LRFDUS-6) and NCHRP 360.

The required depth of drilled shaft embedment and diameter for strength limit and service limit states is presented in charts in Appendix C. The recommendations presented are based on currently available bridge geometry and loads. If bridge widening plans and/or loads change significantly, we should be notified for review and possible supplemental recommendations.

	Max Drilled Shaft Load at Top of Shaft (Shaft Wt. not included)		
	Strength Load (kips)	Service Load (kips)	Minimum Top Elevation (feet)
West Abutment	180	120	5584
East Abutment	180	120	5578

Excavations and drilling into the near surface and underlying site soils will be slow and difficult to accomplish due to shallow bedrock and shallow groundwater. The drilled shafts shall be constructed in accordance with Section 609 of the ADOT Standard Specifications and Section 609 of the Project Specifications when groundwater is encountered during construction. Where bedrock sockets require casing through overburden, ADOT Bridge Design Guidelines 10.8 shall be used and a 6-inch reduction of shaft diameter shall occur. Bedrock sockets shall be drilled to a minimum 10 feet into competent bedrock.

Shoring Considerations:

Excavation into the near surface and underlying site soils will be difficult and slow to accomplish due to shallow ground water, the collapse potential of overburden soils, the potential for large cobbles, small to large boulders, decomposed bedrock and the strength of the bedrock. Due to the

depth and difficulty of excavations, the vicinity of the existing roadways and the anticipated safe construction slope, shoring will be necessary.

Excavations for spread footings will range from 8 to 14 feet below existing grade and will be embedded into bedrock 1 foot. Open cut excavations for construction of spread footings in overburden soils may require a 2H:1V temporary cut slope and in highly weathered or decomposed bedrock may require a 1/2H:1V temporary cut slope. Competent bedrock may be cut vertically. Due to depth requirements for the spread footing and slope requirements, open excavations may require the closure of more than the width of the existing Right-of-Way. Shoring will be required in these locations to limit the impact to the adjoining residential properties.

The footings should be completed before backfilling and removing retaining braces and shoring. Shoring should be designed by an engineer employed by the contractor familiar with the design, procedures and guidelines of shoring systems.

Seismic Considerations:

Based on AASHTO Section 3.10, the following may be used in design:

- Site Classification – Class B (Table 3.10.3.1-1, Method B)
- Horizontal Peak Ground Acceleration Coefficient PGA - 0.071
- Horizontal Response Spectral Acceleration Coefficient Ss - 0.165
- Horizontal Response Spectral Acceleration Coefficient S_1 – 0.050
- Site Factor F_{pga} – 1.0
- Site Factor F_a – 1.0
- Site Factor F_v – 1.0
- Acceleration Coefficient A_s – 0.071
- Acceleration Coefficient S_{D1} – 0.050
- Seismic Zone – 1 (Table 3.10.6-1)
- Horizontal Design Connection Force $\geq$ 0.25 (Vertical Reaction) (Section 3.10.9.2)

Per USGS Design Maps Summary Report, the following was generated.

User–Specified Input

- **Report Title** G24817 - Bridge No. 7881 Replacement Sat. April 14, 2018 15:00:30 UTC
- **Building Code Reference Document** 2009 AASHTO Guide Specifications for LRFD Seismic Bridge Design (which utilizes USGS hazard data available in 2002)

- **Site Coordinates** 34.407°N, 111.268°W
- **Site Soil Classification** Site Class B – "Rock"

USGS–Provided Output

PGA =	0.072 g	A_s =	0.072 g
S_S =	0.166 g	S_{DS} =	0.166 g
S_1 =	0.051 g	S_{D1} =	0.048 g

Lateral Earth Pressures:

The following tabulation presents the recommended lateral earth pressures (equivalent fluid pressures) and base friction values which should be used in the lateral design of abutment walls. The lateral pressures are equivalent fluid pressures for average anticipated conditions. If a line with an angle of 45°+Φ/2 extends up from the top of heel of the footing and intersects native soils, the active pressure for native soils shall be used in design. Otherwise, active pressures for structural backfill shall be used in design.

Active Pressures:

- Native Soil ---------- 35 psf/ft
- Structural Backfill ------- ---------- 32 psf/ft

Passive Pressures*:

Soil Friction Angle * Φ_f (deg)	Passive Lateral Earth Pressure Coefficient (k_p) Horizontal	Dry Unit Weight γ (pcf)
40 (in-situ)	15.0	97
32 (backfill)	7.83	120

Coefficient of Base Friction:

- Angle of Internal Friction ---------- 40°

  *Per AASHTO LRFDUS-6 (2012) Figure 3.11.5.4-1

The above equivalent fluid pressures are for vertical walls with horizontal backfills and does not include temporary loads imposed by compaction equipment or permanent loads resulting from backfill swell pressures, hydrostatic pressures or surcharge loads. All retaining walls should contain weep holes and where possible, structures should have drainage which slopes away from structures to reduce the potential for the buildup of hydrostatic pressures.

Backfill Placement:

Compaction of the backfill soils against footings and walls designed to provide passive resistance should be accomplished to at least 95 percent of the maximum dry density as determined by Arizona Test Method 225, to develop this resistance with low strains.

Drainage:

Due to the varying collapse potential of the underlying soils, proper positive drainage should be developed to reduce potential interaction with moisture sensitive soils. Backfill should slope away from new or existing structures at a minimum of 10H:1V to prevent ponding. Compaction of existing soils and recompaction of surface soils will assist in reducing the potential for saturation and collapse of underlying soils. Measures should be taken during construction to ensure the drainage does not become impeded and/or allow ponding to occur.

Lateral Capacities:

Lateral capacities of drilled shafts should be based on parameters presented below and using a computer program such as LPILE.

LPILE Parameters (6.0.37 and Higher)

Abutment 1

Material Type	Layer	Depth (ft)	Density (γ)pcf	k (pci)	Shear Strength Phi	Shear Strength c (psf)	Σ_{50} Value	L-Pile Soil Type
West Abutment								
Gravely Sandy Clay	1	0-2	105	---	42	0	0.05	Stiff Clay
Gravely Sandy Clay	2	2-6	100	---	43	0	0.05	Stiff Clay
Bedrock M_{US}	3	6-15.5	151	See Table A: Rock Properties				Strong Rock
Bedrock M_{UT}	4	15.5-21.5	155	See Table A: Rock Properties				
East Abutment								
Silty Gravely Sand	1	0-2	103	200	43	0	---	Sand (O'Neil)
Silty Gravely Sand	2	2-8.5	97	215	46	0	---	Sand (O'Neil)
Silty Gravely Sand	3	8.5-12	28	225	46	0	---	Sand (O'Neil)
Bedrock M_{US}	4	12-22	151	See Table A: Rock Properties				Strong Rock
Bedrock M_{UT}	5	22-26	155	See Table A: Rock Properties				Strong Rock
Bedrock M_{UL}	6	26-33	157	See Table A: Rock Properties				Strong Rock

The k values are based on the anticipated cohesion (c) and friction angles (phi) of the granular soils.

Rock Properties Strong Rock:

Table A

Bedrock Unit	Uniaxial Compressive Strength q_u (psi)
M_{US}	4800
M_{UT}	5500
M_{UL}	9000

The above values are based on averaged parameters of the entire rock unit. Strong rock may not indicative of on-site rock classification. Parameters which exceed the allowable program input may be consecutively reduced to maximum allowable amounts.

REFERENCES

Richard, S.M., Reynolds, S.J., Spencer, J.E., and Pearthree, P.A., 2000, Geologic map of Arizona: Arizona Geological Survey, Map 35, scale 1:1,000,000.

Huddle, J.W., and Dobrovolny, Ernest, 1953, Devonian and Mississippian rocks of central Arizona: U.S. Geological Survey, Professional Paper 233-D, scale 1:1,000,000.

APPENDIX A
FIELD EXPLORATIONS

R·A·M·M

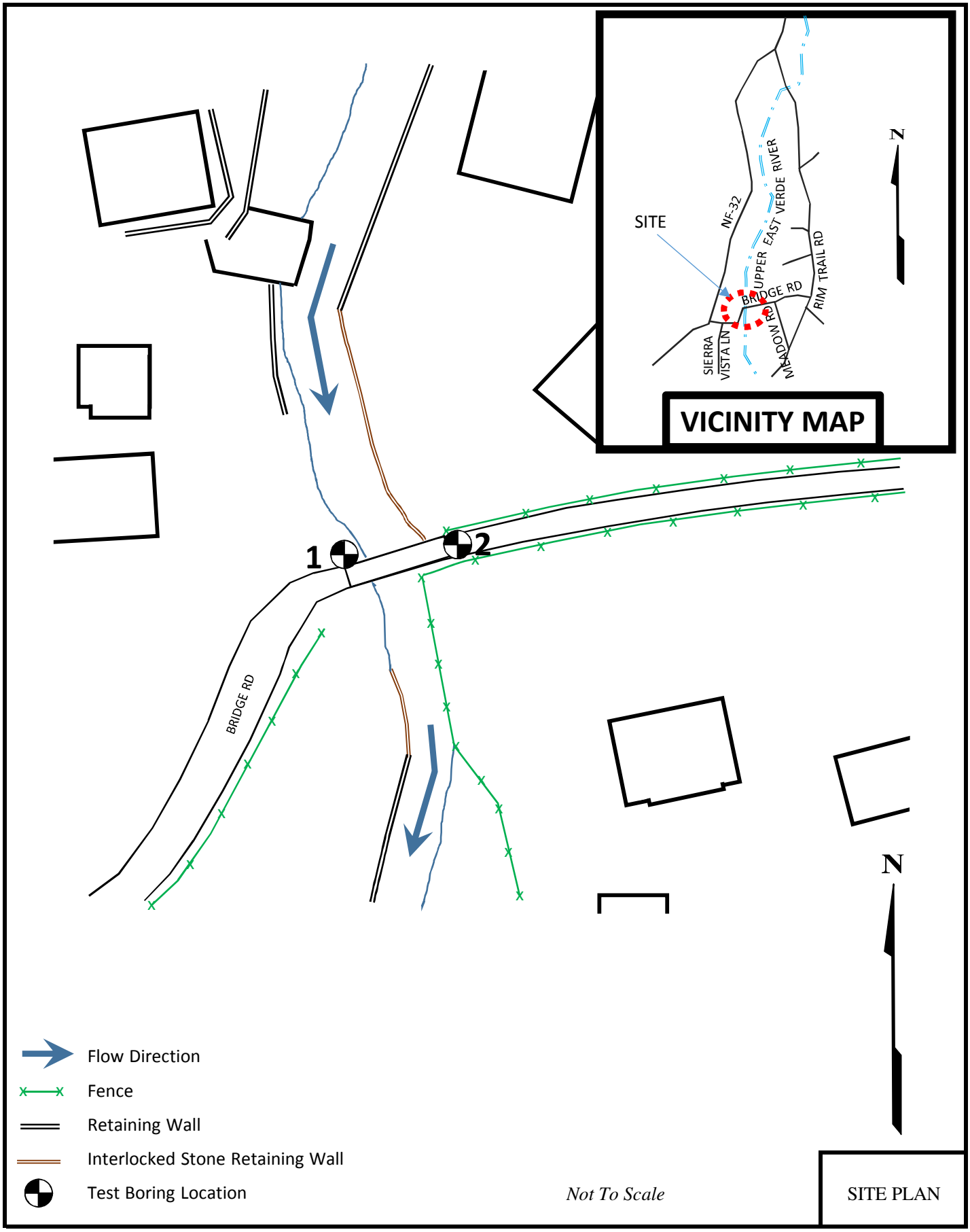
VICINITY MAP
SITE
NF-32
UPPER EAST VERDE RIVER
BRIDGE RD
RIM TRAIL RD
MEADOW RD
SIERRA VISTA LN
N
1
2
BRIDGE RD
N
Flow Direction
Fence
Retaining Wall
Interlocked Stone Retaining Wall
Test Boring Location
Not To Scale
SITE PLAN

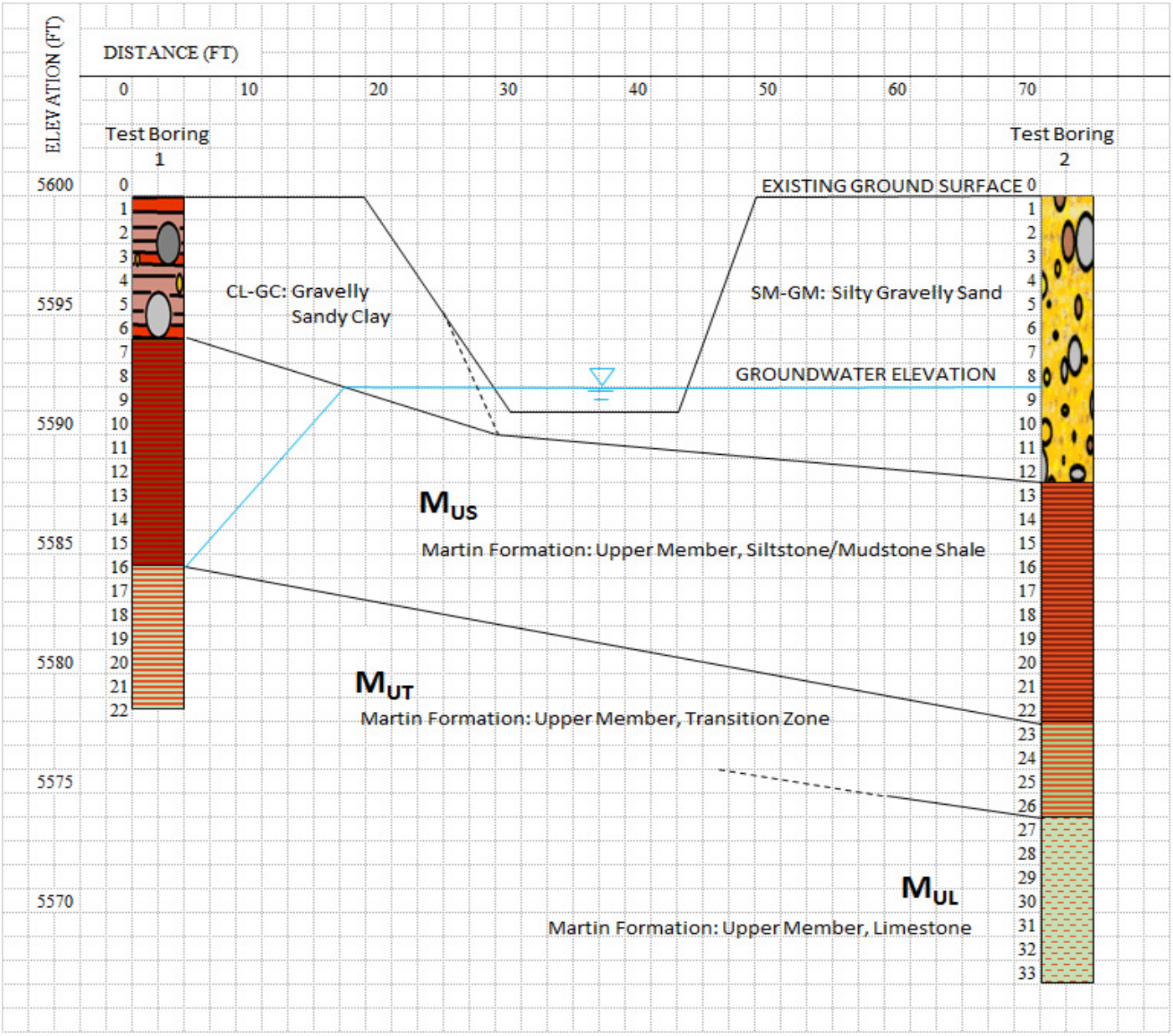

Not To Scale

Cross-Section

LEGEND

ASTM Designation: D2487-11
(Based on Unified Soil Classification System)

CLASSIFICATION OF SOILS

Criteria for Assigning Group Symbols and Group Names Using Laboratory Tests					Soil Classification	
					Group Symbol	Name
COARSE-GRAINED SOILS More than 50% retained on No. 200 Sieve	Gravels More than 50% coarse fraction retained on No. 4 Sieve	Clean Gravels Less than 5% fines	Cu >4 and 1 <Cc <3		GW	Well graded gravel
			Cu<4 and/or 1>Cc>3		GP	Poorly graded gravel
		Gravels with Fines More than 12% fines	Fines classify as ML or MH		GM	Silty gravel
			Fines classify as CL or CH		GC	Clayey gravel
	Sands 50% or more of coarse fraction passes No. 4 sieve	Clean Sands Less than 5% fines	Cu >6 and 1 <Cc <3		SW	Well-graded sand
			Cu<6 and/or 1>Cc>3		SP	Poorly graded sand
		Sands with Fines More than 12% fines	Fines classify as ML or MH		SM	Silty sand
			Fines classify as CL or CH		SC	Clayey sand
FINE-GRAINED SOILS 50% or more passes the No. 200 Sieve	Silts and Clays Liquid limit less than 50	Inorganic	PI>7 and plots on or above "A" line		CL	Lean clay
			PI<4 or plots below "A" line		ML	Silt
		Organic	Liquid Limit - oven dried / Liquid limit - not dried	<0.75	OL	Organic clay / Organic silt
	Silts and Clays Liquid limit 50 or more	Inorganic	PI plots on or above "A" line		CH	Fat clay
			PI plots below "A" line		MH	Elastic silt
		Organic	Liquid limit - oven dried / Liquid limit - not dried	<0.75	OH	Organic clay / Organic silt
HIGHLY ORGANIC SOILS	Primarily organic matter, dark in color, and organic odor				PT	Peat

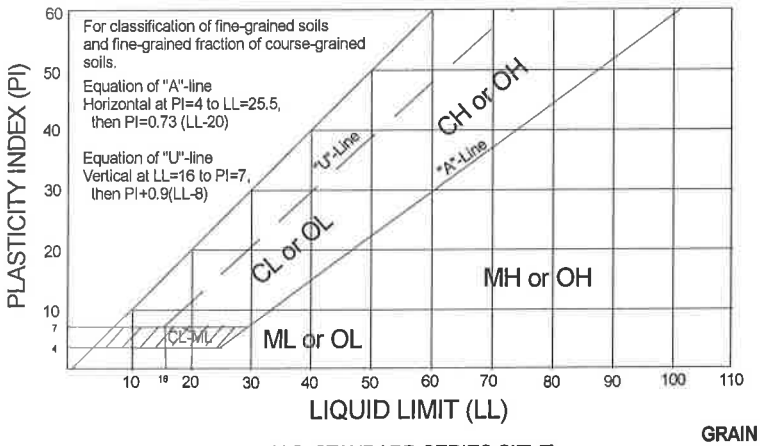

TEST BORING LOG DEFINITIONS

Blows per foot using 140 pound hammer with 30 inch free-fall.

Depth, feet	Blows/Foot C	Blows/Foot N/R	Sample Type	Dry Density pcf	Water Content, %	Unified Classification	Description

C = Continuous Penetration Resistance (2 inch diameter rod)
N = Standard Penetration Resistance (ASTM D1586)
R = Penetration Resistance (3 inch diameter ring line sampler)

GRAIN SIZES

U.S. STANDARD SERIES SIEVE: 200, 40, 10, 4

CLEAR SQUARE SIEVE OPENINGS: 3/4", 3", 12"

SILTS & CLAYS DISTINGUISHED ON BASIS OF PLASTICITY	SAND			GRAVEL		COBBLES	BOULDERS
	FINE	MEDIUM	COARSE	FINE	COARSE		

MOISTURE CONDITION (INCREASING MOISTURE ⟶)

DRY — SLIGHTLY DAMP — DAMP — MOIST (Plastic Limit) — VERY MOIST — WET (SATURATED) (Liquid Limit)

CONSISTENCY CORRELATION		RELATIVE DENSITY CORRELATION	
CLAYS & SILTS	BLOWS/FOOT*	SANDS & GRAVELS	BLOWS/FOOT*
VERY SOFT	0-2	VERY LOOSE	0-4
SOFT	2-4	LOOSE	4-10
FIRM	4-8	MEDIUM DENSE	10-30
STIFF	8-16	DENSE	30-50
VERY STIFF	16-32	VERY DENSE	OVER 50
HARD	OVER 32		

*Number of blows of 140 lb hammer falling 30" to drive a 2" O.D. (1-3/8" I.D.) split-spoon sampler (ASTM D1586).

TEST BORING LOG

Boring No. 1
Project No. G24817
Project Name: Bridge No. 7881 Replacement, Gila County, AZ
Drill Equipment: CME 75

Date: 3-20-18 **By:** AJS
Sheet No. 1 **Of** 1
Ground Elevation: 5600'
Driller: Wildcat Drilling , Inc.

Depth, feet	Blows /Foot C	Blows /Foot N / R	Rock Core Run #	Rock Core Rate(min/in)	Rock Core Recovery %	Rock Core RQD %	Sample Type	Dry Density,/ Unit Weight (pcf)	Water Content, %	Unified Classification	Description
		8					R	105	12	CL-GC	Gravelly Sandy Clay, Trace to Some Cobbles and Occasional Boulders; red brown, damp to very damp, firm to very stiff, medium plasticity fines, gravel, cobbles and boulders increase in frequency with depth.
		50/ 6"					R	*	6		Stopped drilling at 4 feet.
5			1	0.35	100	100					Switched to NQ Double Tube Core Barrel
			2	0.59	80	37					M_{US} = Martin Formation: Upper Member, Siltstone/ Mudstone; reddish brown, slightly to lightly weathered, strong to very strong, hard, very thinly bedded, lightly jointed. Green shale banding, inclusions or nodules common.
10										5 W/D	
			3	0.54	100	77				W/D	
15									▽	W/D 5	
			4	0.44	98	40				W/D	M_{UT} = Martin Formation: Upper Member, Transition Zone; reddish brown to olive green grey, slightly weathered to unweathered, very strong, hard to very hard, heavily banded, occasionally jointed. Occasional small voids.
20											
			5	0.43	100	81					
25											Stopped coring at 21.5 feet. Groundwater observed at 16 feet (192") below ground level. W/D = Highly Weathered/Decomposed Bedrock. * Sample too disturbed to determine density.

This boring log represents the conditions encountered on the date of drilling at this particular location. No other warranty is expressed or implied to the actual conditions which may exist within the vicinity of this boring location.

TEST BORING LOG

Boring No. 2 **Date:** 3-20-18 **By:** AJS
Project No. G24817 **Sheet No.** 1 **Of** 2
Project Name: Bridge No. 7881 Replacement, Gila County, AZ **Ground Elevation:** 5600'
Drill Equipment: CME 75 **Driller:** Wildcat Drilling , Inc.

Depth, feet	Blows /Foot C	Blows /Foot N / R	Rock Core Run #	Rock Core Rate(min/in)	Rock Core Recovery %	Rock Core RQD %	Sample Type	Dry Density,/ Unit Weight (pcf)	Water Content, %	Unified Classification	Description
		14					R	103	6	SM-GM	Silty Gravelly Sand, With Cobbles and Occasional Boulders; tan to red brown, damp, medium dense to dense, non-plastic fines, gravel, cobbles and boulders increase in frequency with depth.
		34					R	97	5		
5		25					R	97	7		
									▽		
10		25					R	---	8		Stopped drilling at 10 feet. Switched to NQ Double Tube Core Barrel
			1	0.39	76	0					M_{US} = Martin Formation: Upper Member, Siltstone/Mudstone shale; red brown, slightly to lightly weathered, strong to very strong, hard, very thinly bedded, lightly jointed. Green/shale banding, inclusions or nodules common.
15										W/D	
										W/D	
										W/D	
			2	0.44	87	42					
										W/D	
20										5	
										10	
										W/D	
										W/D	
			3	0.35	93	57					M_{UT} = Martin Formation: Upper Member, Transition Zone; red brown to olive green grey, slightly weathered to unweathered, very strong, hard to very hard, heavily banded, occasionally jointed. Occasional small voids.
25										70	

-Continued-

This boring log represents the conditions encountered on the date of drilling at this particular location. No other warranty is expressed or implied to the actual conditions which may exist within the vicinity of this boring location.

TEST BORING LOG

Boring No. 2 cont.
Project No. G24817
Project Name: Bridge No. 7881 Replacement, Gila County, AZ
Drill Equipment: CME 75

Date: 3-20-18 **By:** AJS
Sheet No. 2 **Of** 2
Ground Elevation: 5600'
Driller: Wildcat Drilling , Inc.

Depth, feet	Blows /Foot C	Blows /Foot N / R	Rock Core Run #	Rock Core Rate(min/in)	Rock Core Recovery %	Rock Core RQD %	Sample Type	Dry Density / Unit Weight (pcf)	Water Content, %	Joint Orientation	Unified Classification	Description
												M_{UT} = Martin Formation Transition Zone : continued
			4	0.38	100	97						M_{UL} = Martin Formation: Upper Member, Limestone; reddish gray to greenish grey, unweathered, very strong, very hard, very thinly bedded, occasionally jointed. Occasional dendritic staining.
30												30
			5	0.31	100	73						
35												Stopped coring at 33.0 feet. Groundwater observed at 8 feet (100") below ground level. W/D = Highly Weathered/Decomposed Bedrock. 35
40												40
45												45
50												50

This boring log represents the conditions encountered on the date of drilling at this particular location. No other warranty is expressed or implied to the actual conditions which may exist within the vicinity of this boring location.

APPENDIX B
LABORATORY ANALYSIS

R·A·M·M

LABORATORY TEST RESULTS

Date: 3-Apr-18

SAMPLE SOURCE: 2 @ 2'-3'

TESTING PERFORMED: Compression (ASTM D2435) - Driven Ring Sample

SAMPLED BY: RAMM/Schirmer

RESULTS:

Dry Density (pcf): 97 Moisture Content (%): 5

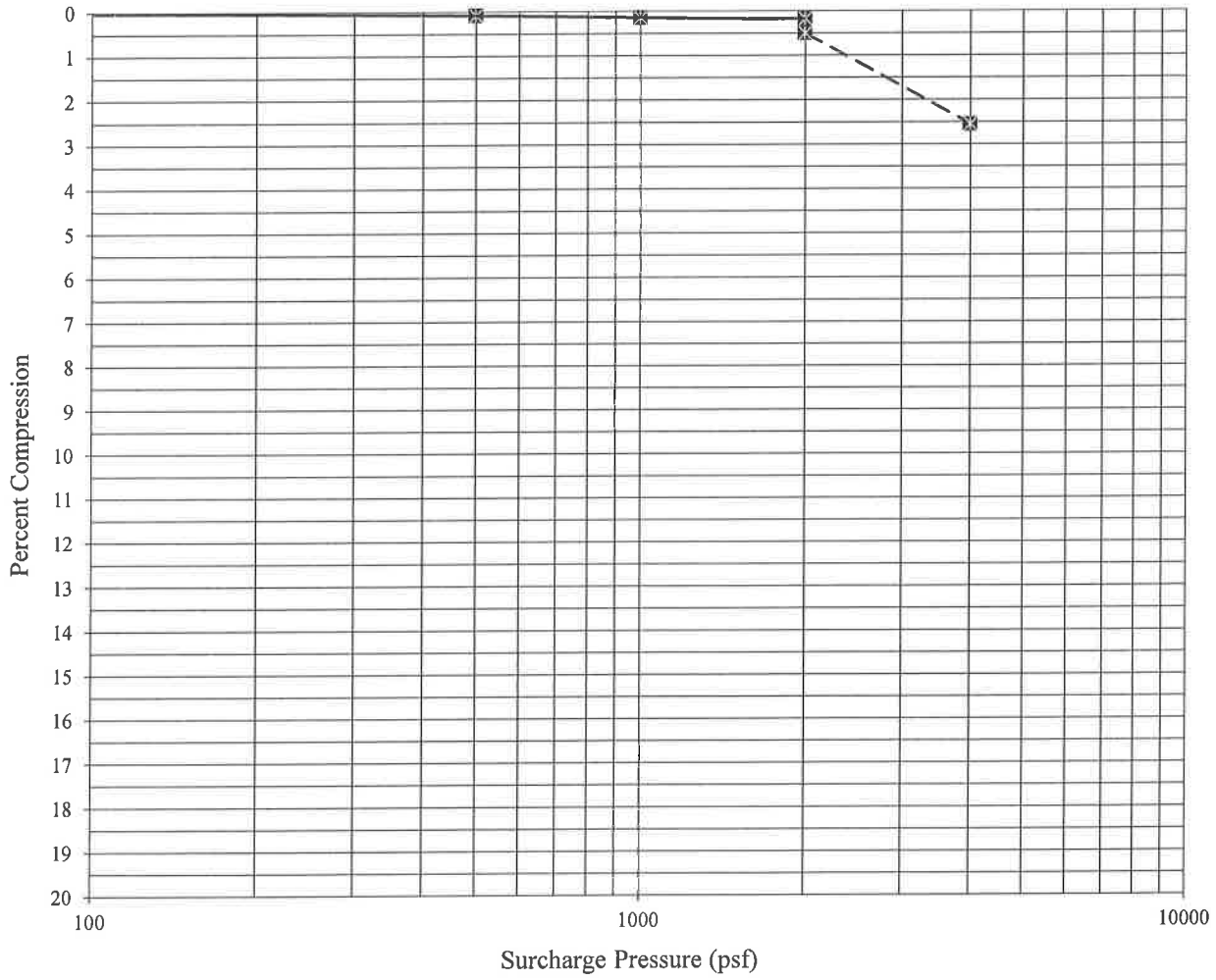

REMARKS: Sample submerged at 2000 psf.

LABORATORY TEST RESULTS

Date: 3-Apr-18

SAMPLE SOURCE: 1 @ 0'-1'

TESTING PERFORMED: Direct Shear (AASHTO T236) - Driven Ring Sample

SAMPLED BY: RAMM/Schirmer

RESULTS:

Dry Density (pcf):	105	Moisture Content (%):	12
Cohesion (psf):	0	Friction Angle (phi):	42

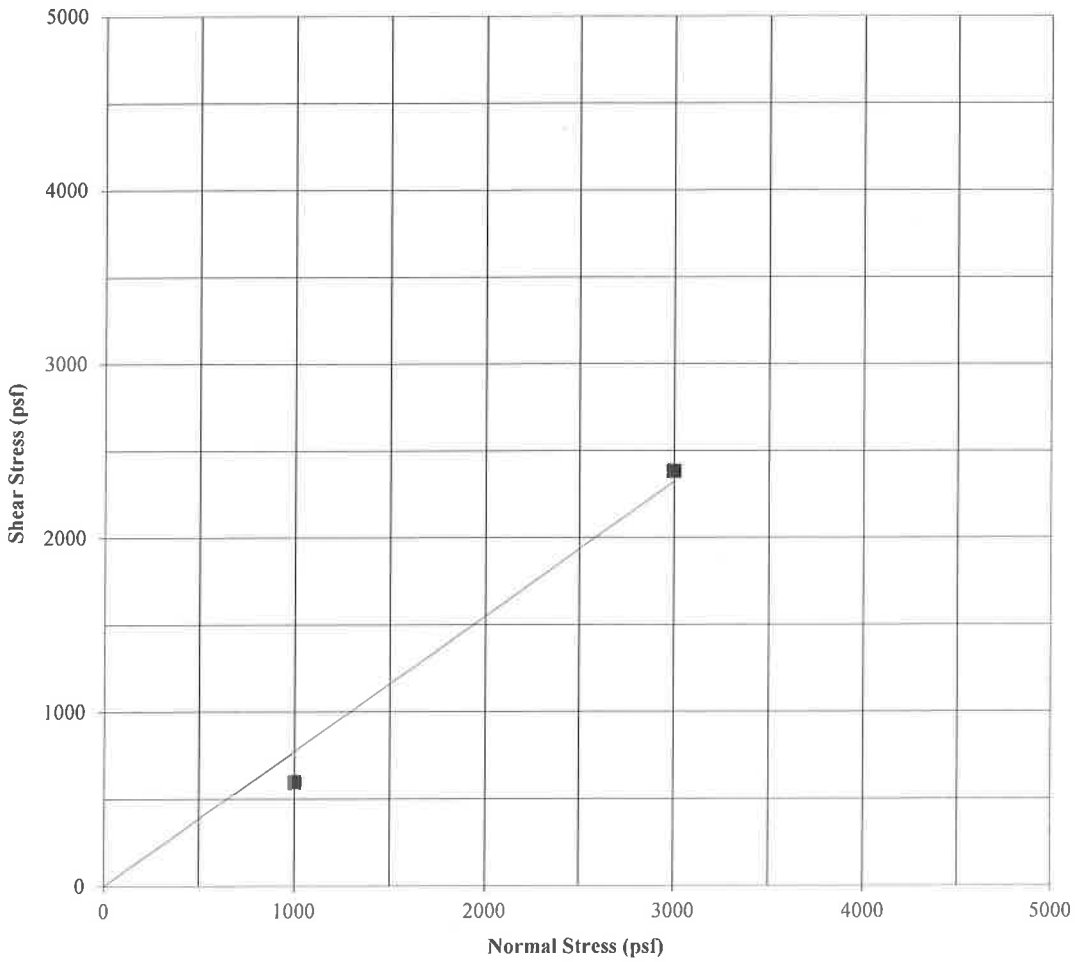

REMARKS: Samples not submerged prior to testing.

LABORATORY TEST RESULTS

Date: 3-Apr-18

SAMPLE SOURCE: 2 @ 5'-6'

TESTING PERFORMED: Direct Shear (AASHTO T236) - Driven Ring Sample

SAMPLED BY: RAMM/Schirmer

RESULTS:

Dry Density (pcf):	97	Moisture Content (%):	7
Cohesion (psf):	0	Friction Angle (phi):	46

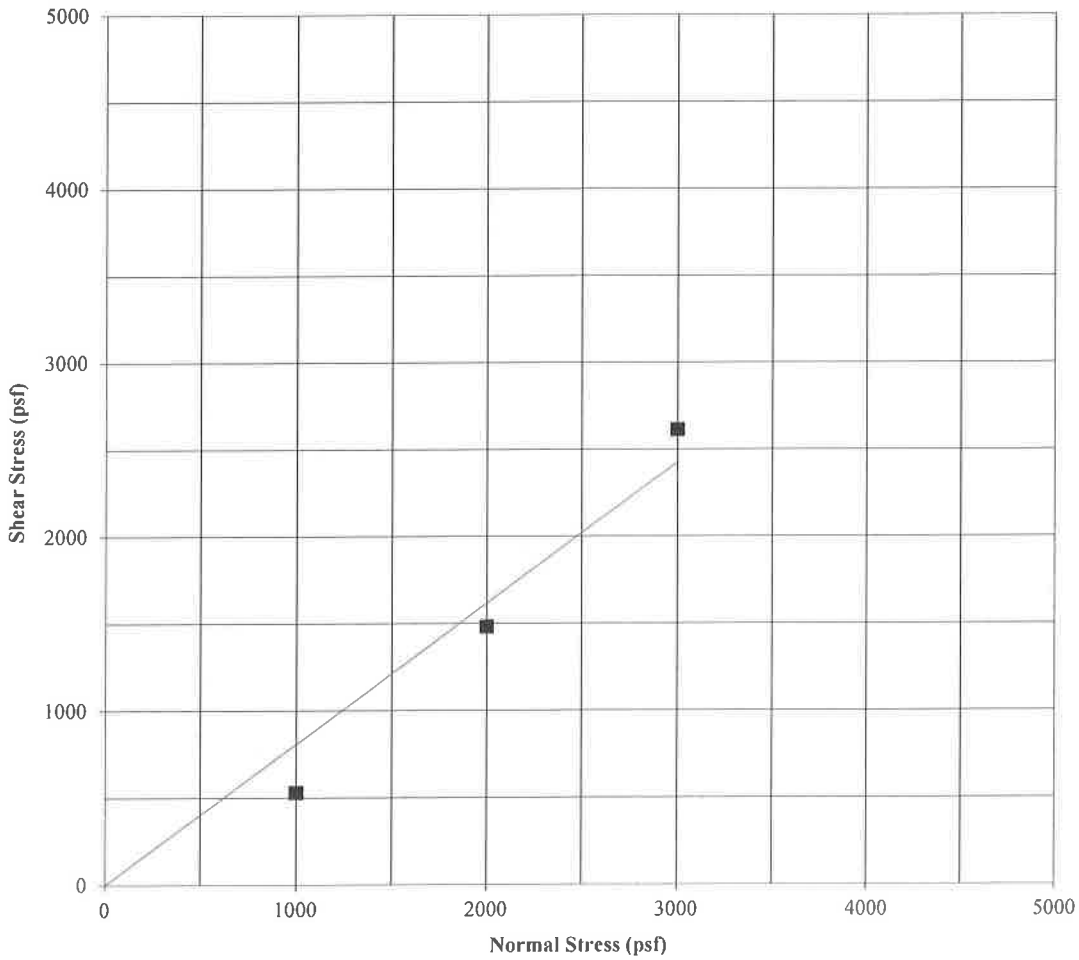

REMARKS: Samples not submerged prior to testing.

LABORATORY TEST RESULTS

Date: 3-Apr-18

SAMPLE SOURCE: As noted below

TESTING PERFORMED: Percent Passing No. 200 Sieve, Atterberg Limits, Percent Expansion (ASTM D1140, D4318, D4546)

SAMPLED BY: RAMM/Schirmer

RESULTS:

Sample Source	Percent Retained No. 4 Sieve	Percent Passing No. 200 Sieve	Liquid Limit	Plasticity Index	Percent Expansion*	Remolded Dry Density (pcf)	Remolded Moisture Content (%)
1 @ 0'-4'	19	52	32	17	6.1	118	9
2 @ 0'-5'	30	27	N/A	NP	0.3	120	8
2 @ 5'-10'	34	18	N/A	NP	0.2	121	7

* Based upon sample remolded to 95% of the estimated maximum dry density at 2% below the estimated optimum moisture content, with a surcharge pressure of 100 psf.

LABORATORY TEST RESULTS

Date: 3-Apr-18

SAMPLE SOURCE: As noted below

TESTING PERFORMED: pH, Minimum Resistivity (ADOT 236a)

SAMPLED BY: RAMM/Schirmer

RESULTS:

Sample Source	pH	Minimum Resistivity (ohm-cm)
1 @ 0'-4'	7.8	2569
2 @ 0'-5'	7.9	1082
2 @ 5'-10'	8.1	5138

LABORATORY TEST RESULTS

Date: 3-Apr-18

SAMPLE SOURCE: As noted below

TESTING PERFORMED: Unit Weight, Unconfined Compressive Strength of Rock Cores (ASTM D2938)

SAMPLED BY: RAMM/Schirmer

RESULTS:

Sample Source	Unit Weight (pcf)	Unconfined Compressive Strength (psi)
1 @ 9'-9.5'	157	5840
1 @ 13'-13.5'	151	4080
1 @ 20.5'-21'	158	5410
2 @ 16.5'-17'	156	5370
2 @ 23'-23.5'	154	5410
2 @ 30'-30.5'	159	8990

APPENDIX C
FACTORED NET BEARING RESISTANCE CHARTS
and
AXIAL RESISTANCE OF DRILLED SHAFTS

R·A·M·M

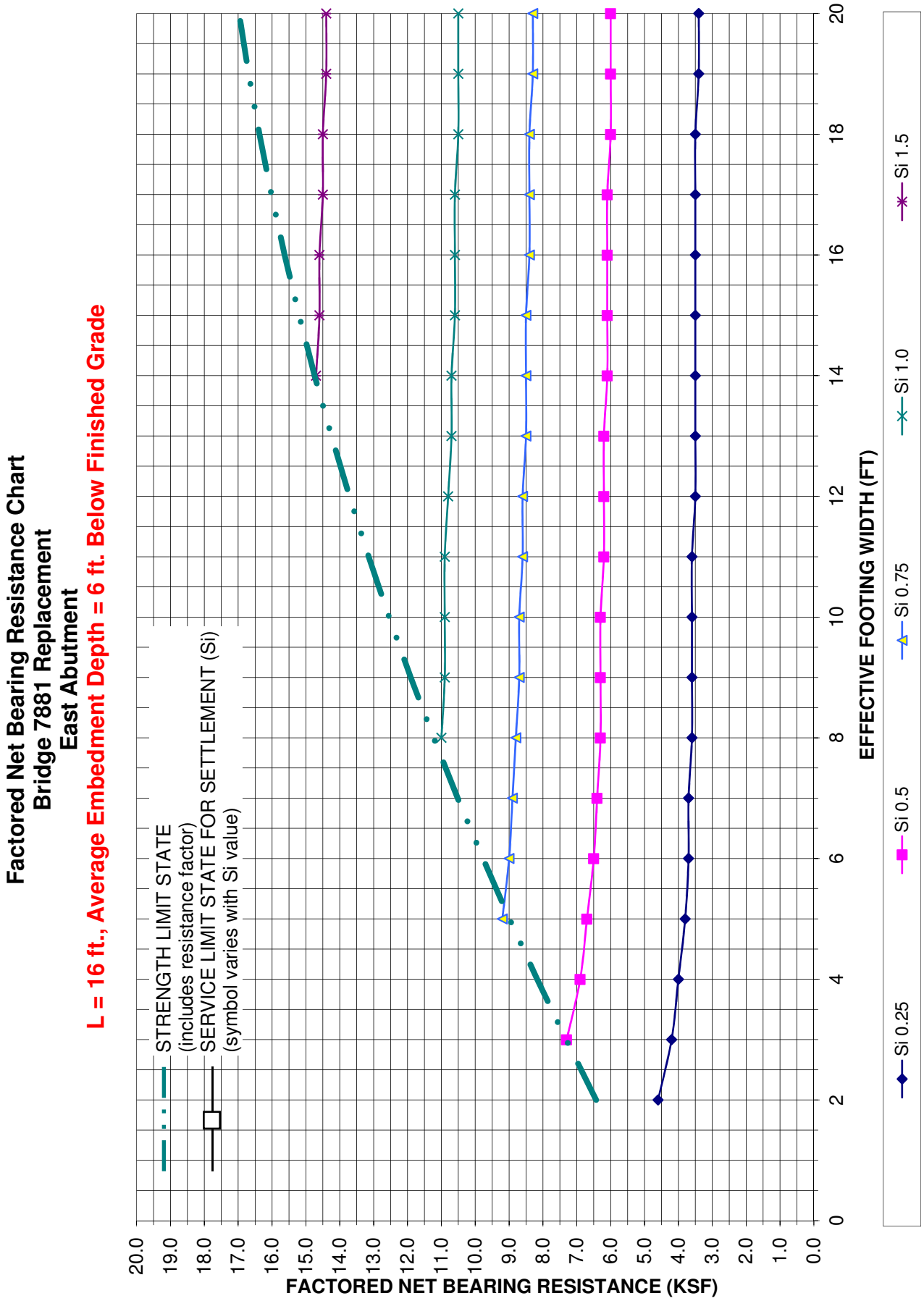
Factored Net Bearing Resistance Chart
Bridge 7881 Replacement
East Abutment
L = 16 ft., Average Embedment Depth = 6 ft. Below Finished Grade
STRENGTH LIMIT STATE
(includes resistance factor)
SERVICE LIMIT STATE FOR SETTLEMENT (Si)
(symbol varies with Si value)
FACTORED NET BEARING RESISTANCE (KSF)
20.0
19.0
18.0
17.0
16.0
15.0
14.0
13.0
12.0
11.0
10.0
9.0
8.0
7.0
6.0
5.0
4.0
3.0
2.0
1.0
0.0
EFFECTIVE FOOTING WIDTH (FT)
0
2
4
6
8
10
12
14
16
18
20
Si 0.25
Si 0.5
Si 0.75
Si 1.0
Si 1.5

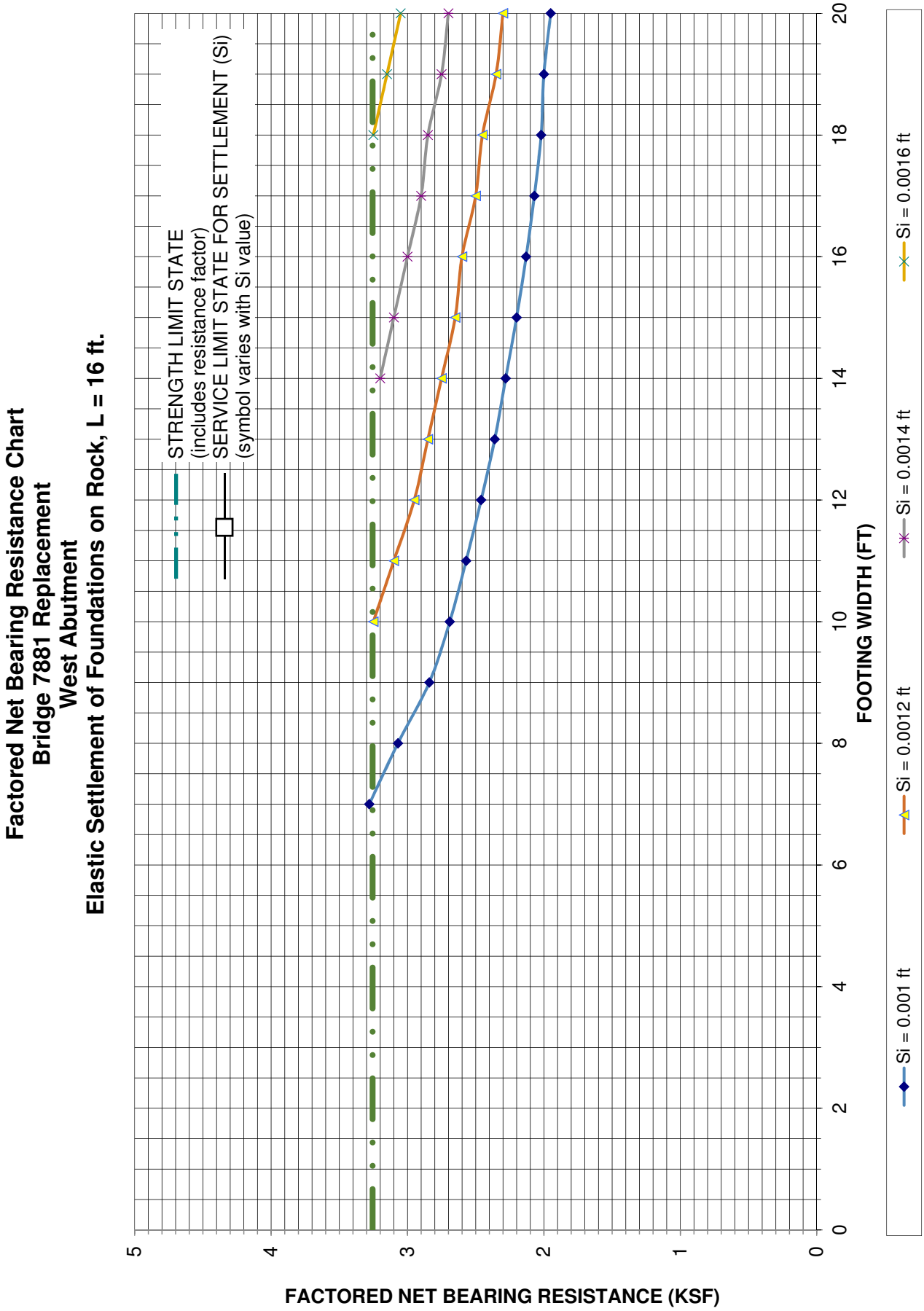
Factored Net Bearing Resistance Chart
Bridge 7881 Replacement
West Abutment
Elastic Settlement of Foundations on Rock, L = 16 ft.
STRENGTH LIMIT STATE
(includes resistance factor)
SERVICE LIMIT STATE FOR SETTLEMENT (Si)
(symbol varies with Si value)
FACTORED NET BEARING RESISTANCE (KSF)
FOOTING WIDTH (FT)
0
1
2
3
4
5
0
2
4
6
8
10
12
14
16
18
20
Si = 0.001 ft
Si = 0.0012 ft
Si = 0.0014 ft
Si = 0.0016 ft

Factored Axial Resistance of Drilled Shafts
Bridge 7881 Replacement - West Abutment
(Strength Limit State)
NON-REDUNDANT SHAFTS

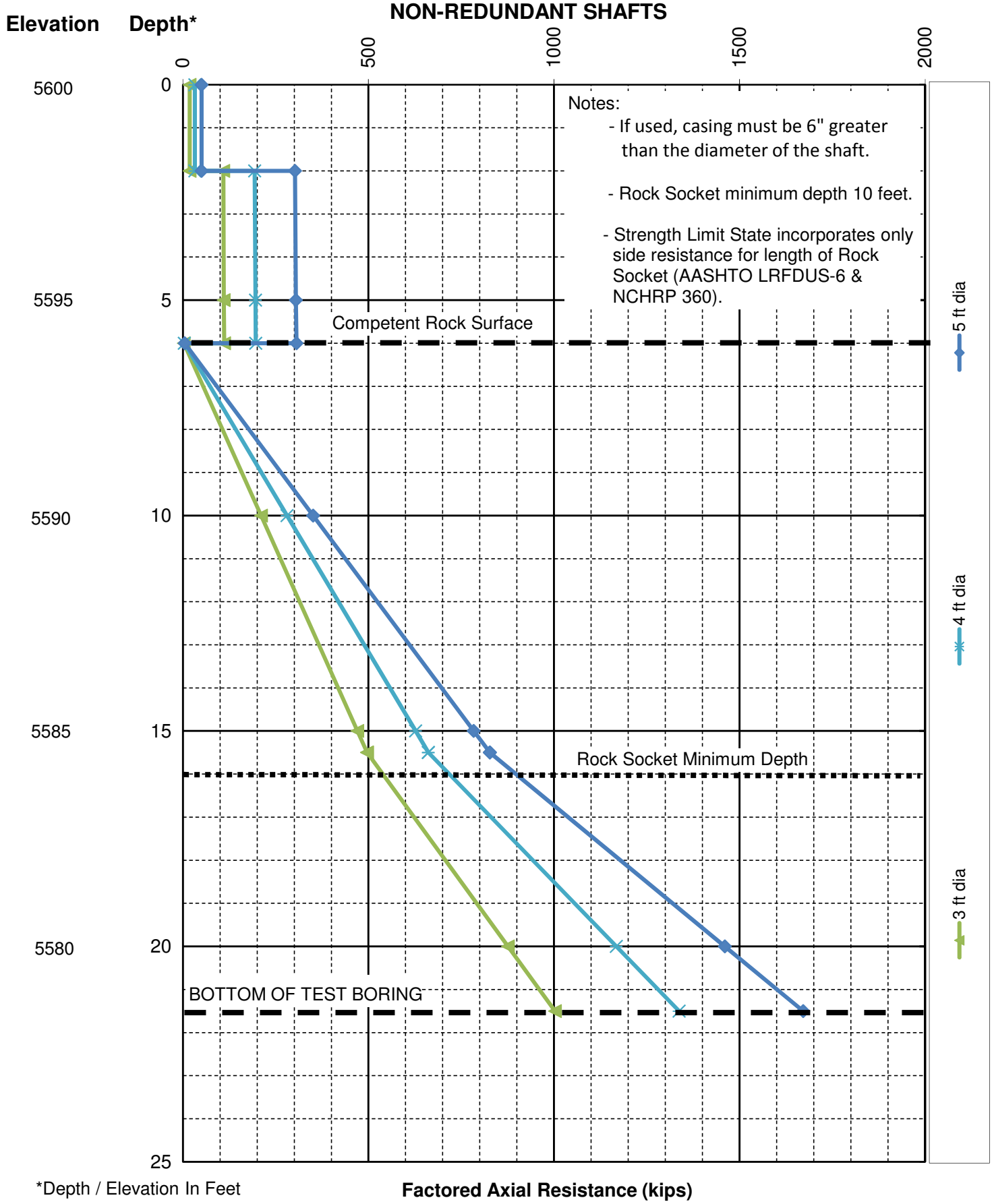

*Depth / Elevation In Feet

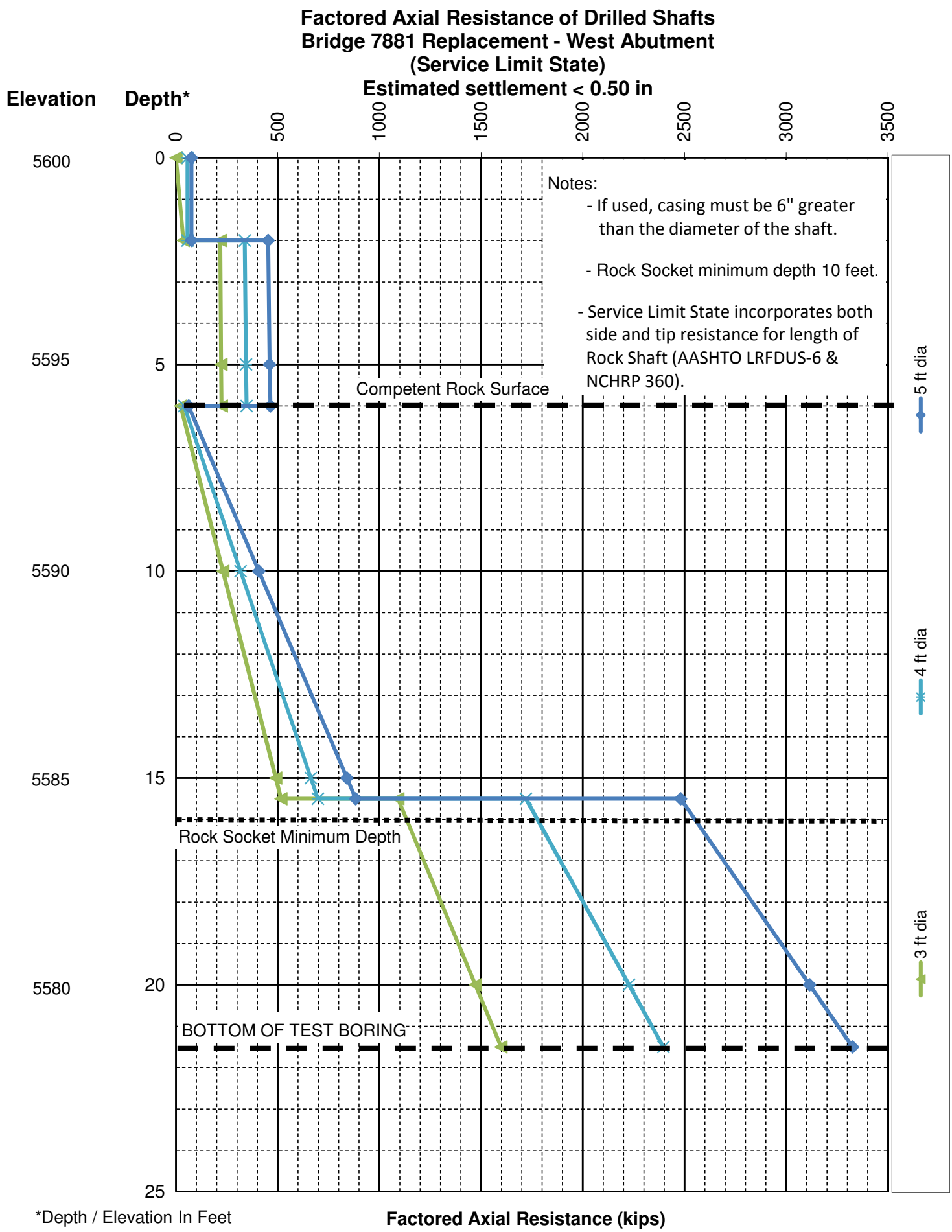
Factored Axial Resistance of Drilled Shafts
Bridge 7881 Replacement - West Abutment
(Service Limit State)
Estimated settlement < 0.50 in
Elevation
Depth*
0
500
1000
1500
2000
2500
3000
3500
5600
5595
5590
5585
5580
0
5
10
15
20
25
Notes:
- If used, casing must be 6" greater than the diameter of the shaft.
- Rock Socket minimum depth 10 feet.
- Service Limit State incorporates both side and tip resistance for length of Rock Shaft (AASHTO LRFDUS-6 & NCHRP 360).
Competent Rock Surface
Rock Socket Minimum Depth
BOTTOM OF TEST BORING
5 ft dia
4 ft dia
3 ft dia
*Depth / Elevation In Feet
Factored Axial Resistance (kips)

Factored Axial Resistance of Drilled Shafts
Bridge 7881 Replacement - East Abutment
(Strength Limit State)
NON-REDUNDANT SHAFTS

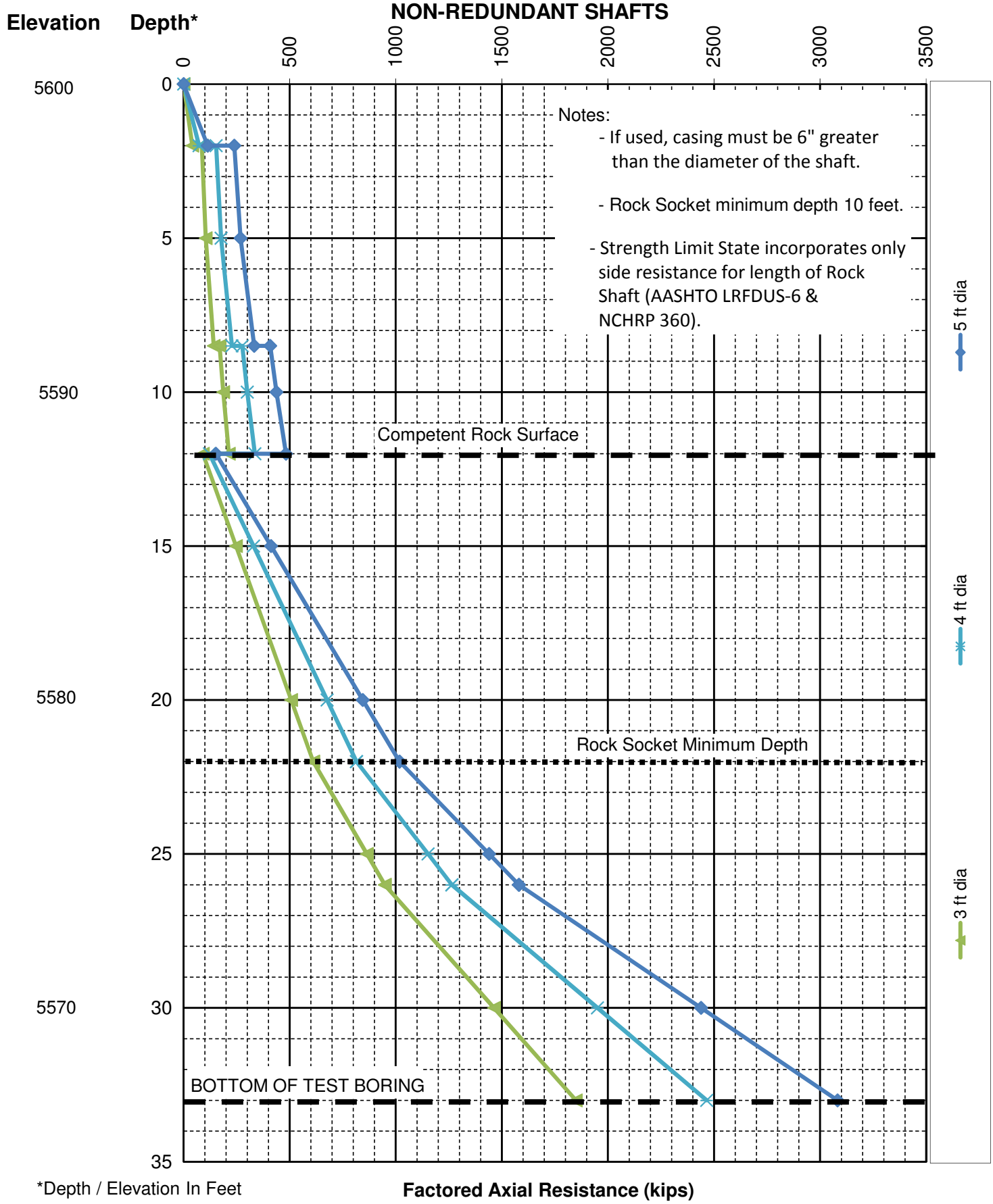

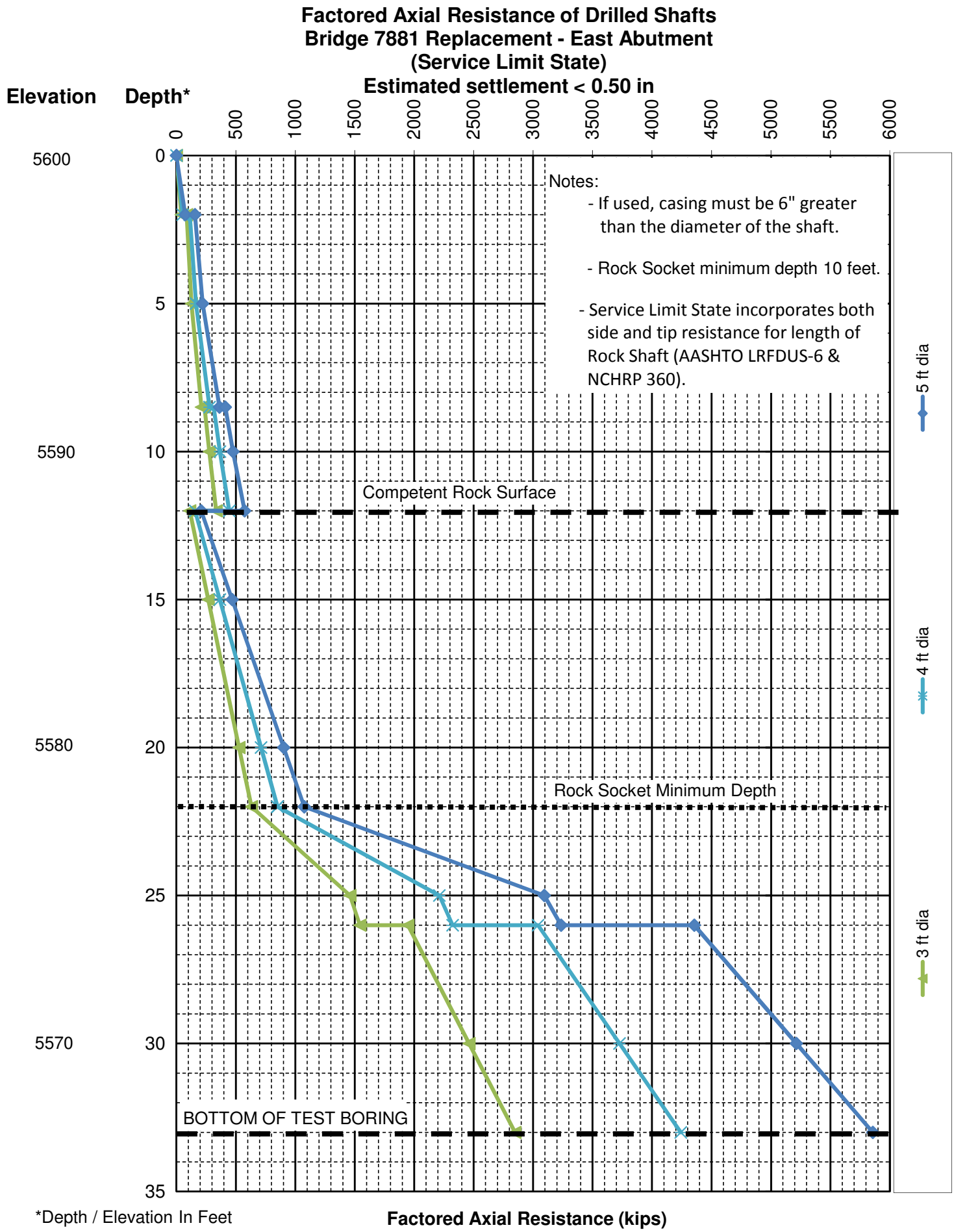
Factored Axial Resistance of Drilled Shafts
Bridge 7881 Replacement - East Abutment
(Service Limit State)
Estimated settlement < 0.50 in
Elevation
Depth*
0
500
1000
1500
2000
2500
3000
3500
4000
4500
5000
5500
6000
5600
5590
5580
5570
0
5
10
15
20
25
30
35
Notes:
- If used, casing must be 6" greater than the diameter of the shaft.
- Rock Socket minimum depth 10 feet.
- Service Limit State incorporates both side and tip resistance for length of Rock Shaft (AASHTO LRFDUS-6 & NCHRP 360).
Competent Rock Surface
Rock Socket Minimum Depth
BOTTOM OF TEST BORING
5 ft dia
4 ft dia
3 ft dia
*Depth / Elevation In Feet
Factored Axial Resistance (kips)

APPENDIX D
CORE PHOTOS

R·A·M·M

BORING NO.	1
BOX NO.	1 OF 2
FROM DEPTH	4.0 FEET
TO DEPTH	13.0 FEET

BORING NO.	1
BOX NO.	2 OF 2
FROM DEPTH	13.0 FEET
TO DEPTH	21.5 FEET

BORING NO.	2
BOX NO.	1 OF 3
FROM DEPTH	10.0 FEET
TO DEPTH	22.0 FEET

BORING NO.	2
BOX NO.	2 OF 3
FROM DEPTH	22.0 FEET
TO DEPTH	30.0 FEET

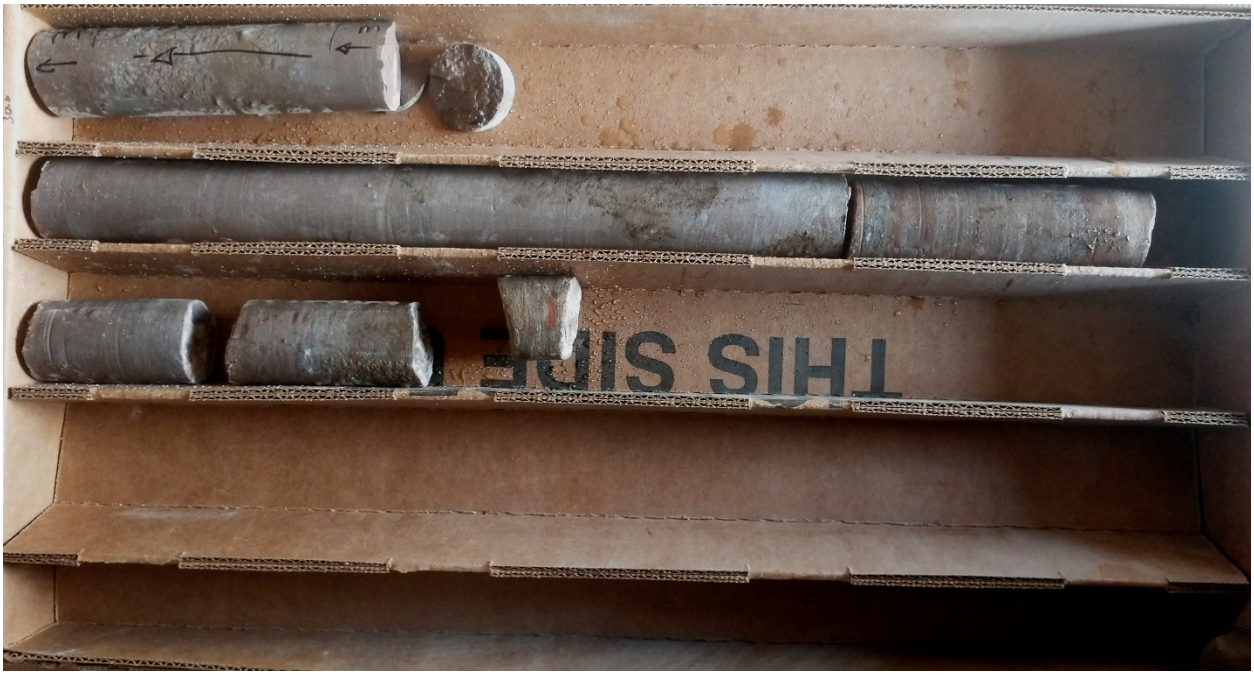

BORING NO.	2
BOX NO.	3 OF 3
FROM DEPTH	30.0 FEET
TO DEPTH	33.0 FEET

GILA COUNTY
RIM TRAIL BRIDGE REPLACEMENT
PLANS
STRUCTURE NO. 7881

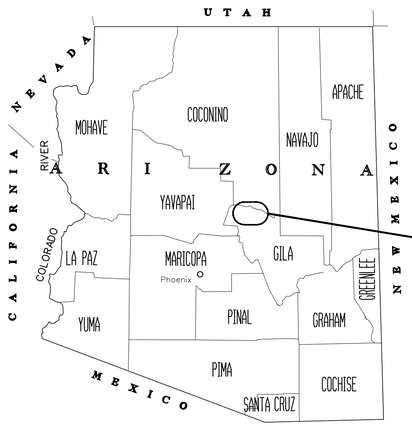

PROJECT LOCATION

NORTH

VICINITY MAP

NTS

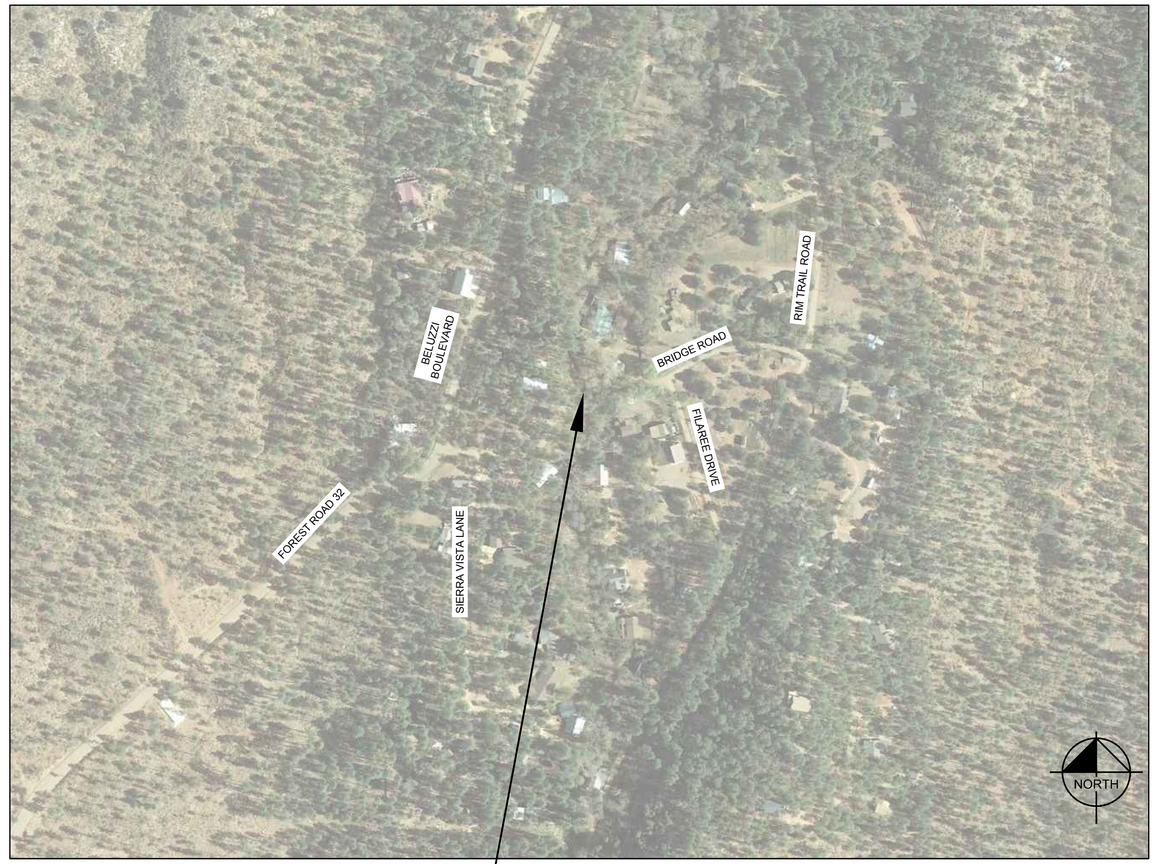

PROJECT SITE

BRIDGE ROAD
GILA COUNTY, AZ 85541

PROJECT INFORMATION

OWNER:
STEVE SANDERS
DIRECTOR
GILA COUNTY PUBLIC WORKS
745 N. ROSE MOFFORD WAY
GLOBE, AZ, 85501
PHONE: (928) 402-8530

ENGINEER:
DAVE LEISTIKO, P.E.
KIMLEY-HORN
7740 N. 16TH ST., SUITE 300
PHOENIX, AZ 85020
PHONE: (602) 371-4560

GILA COUNTY BOARD OF SUPERVISORS

CHAIR	WOODY CLINE	DISTRICT 3
VICE CHAIR	TOMMIE C. MARTIN	DISTRICT 1
MEMBER	TIM R. HUMPHREY	DISTRICT 2

COUNTY MANAGER

JAMES MENLOVE

PUBLIC WORKS DEPARTMENT DIRECTOR

STEVE SANDERS

INDEX OF SHEETS

1	COVER SHEET
2	GENERAL NOTES, PROJECT CONTROL & TYPICAL SECTIONS
3	ROADWAY REMOVAL SHEET
4	ROADWAY PLAN SHEET
5	ROADWAY PROFILE SHEET
6	DRIVEWAY DETAIL SHEET
7	DETAIL SHEET
8-11	EROSION CONTROL & FINAL STABILIZATION PLANS
12-28	BRIDGE PLANS

CALL TWO WORKING DAYS BEFORE YOU DIG
602-263-1100
1-800-STAKE-IT
(OUTSIDE MARICOPA COUNTY)

Kimley»Horn

© 2020 KIMLEY-HORN & ASSOCIATES, INC.

7740 N. 16TH STREET, SUITE 300, PHOENIX, AZ 85020
PHONE: 602-944-5500 | WWW.KIMLEY-HORN.COM

GILA COUNTY
745 ROSE MOFFORD WAY
GLOBE, AZ 85501

DESIGN: TRE | DRAWN: MPF | CHK: DJL | DATE: 05/08/2020

REV	DESCRIPTION	BY	DATE:

COVER SHEET

GILA COUNTY
RIM TRAIL BRIDGE REPLACEMENT

PROJECT NO. ADSPO17-00006796
DATE: 05/20

Registered Professional Engineer (Civil)
CERTIFICATE NO.
37422
DAVID J. LEISTIKO
Date Signed 05/08/20
ARIZONA, U.S.A.

SHEET NO.
1 of 28

K:\PHX_Roadway\291233000-Rim Trail Bridge\Cadd\12-Sheets\Roadway\291233000-CV01.dwg 5/8/2020 3:38 PM FLOOD, MARK

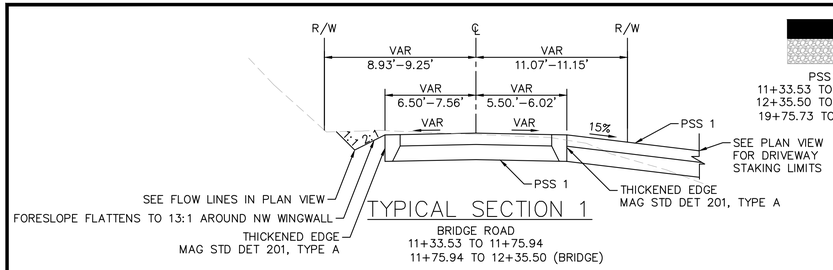

TYPICAL SECTION 1

BRIDGE ROAD
11+33.53 TO 11+75.94
11+75.94 TO 12+35.50 (BRIDGE)

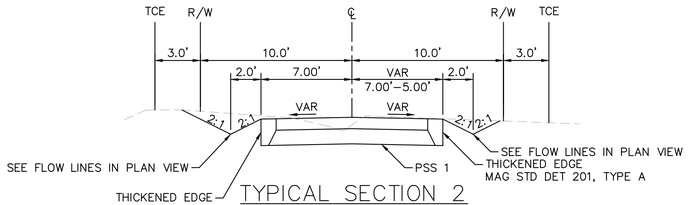

TYPICAL SECTION 2

BRIDGE ROAD
12+35.50 TO 12+85.50

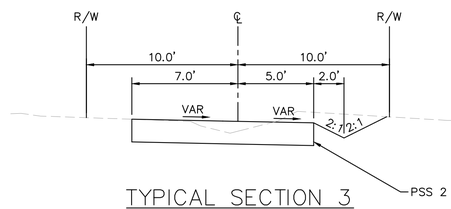

TYPICAL SECTION 3

BRIDGE ROAD
12+85.50 TO 13+90.00

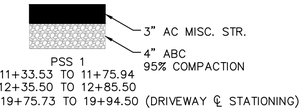

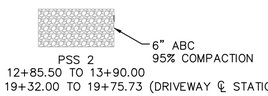

NOTES:
1. FOR ADDITIONAL INFORMATION, SEE STAKING ON PLANS.
2. SEE PAVING LIMITS ON PLANS.

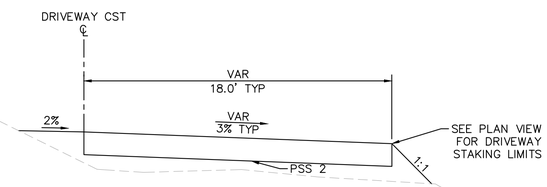

TYPICAL SECTION 4

DRIVEWAY

UTILITY INFORMATION

COMPANY	CONTACT	NUMBER
ARIZONA PUBLIC SERVICE–PAYSON	KRISTAL KROSS	(602) 493–4220
RIM TRAIL DOMESTIC WATER IMPROVEMENT DISTRICT	DON M. ASCOLI	(928) 472–7585
TOWN OF PAYSON–H20	LARRY MCNEELEY	(928) 978–6112

LEGEND

	CENTERLINE
	NEW DE
	TCE
	EXIST R/W
PL	PROPERTY LINE
	EXIST FENCE
	NEW FENCE
X X	
WATTLE	9" SEDIMENT WATTLES
	FLOW LINE
W	EXIST WATER
OHE	EXIST OVERHEAD ELECTRIC
	PSS 1
	PSS 2
	SEEDING
	ROCK PROTECTION
	GABION

GENERAL NOTES

1. All work to conform to the MAG Uniform Standard Specifications for Public Works Construction Dated 2020 together with the ADOT Standard Specifications for Road and Bridge Construction Dated 2008 and all current revisions thereto.
2. Standard Details refer to the MAG Standard Details for Public Works Construction and ADOT Standard Drawings and Construction unless otherwise noted.
3. All existing utility lines shown on the plans are from utility maps. The Contractor shall verify the actual location before starting construction. The Contractor shall contact "Blue Stake", 1–800–782–5348, prior to beginning construction.
4. Existing utilities interfering with construction shall be reset or abandoned and relocated by the utility company owner unless otherwise noted. Contractor shall verify abandonment and relocation with the respective owners prior to beginning construction.
5. Disposal of all construction waste material, broken concrete, etc. will be the responsibility of the contractor, subject to the approval of the County Engineer.
6. All stations and call out distances left and right refer to the construction centerline unless noted otherwise.
7. All trees, bushes and fences inside the project area which interfere with construction, will be removed and disposed of properly by the contractor unless noted otherwise.
8. An AZDPES Permit will be required for this project. The estimated maximum area of disturbance is approximately 0.25 acres.
9. The Contractor shall verify all benchmark elevations before using them for construction. BM's in utility poles are particularly susceptible to damage.
10. A Geotechnical Report is available in the specifications for this project. All earthwork and general construction requirements shall be as per the referenced Geotechnical Report and specifications unless otherwise noted within these plans.
11. Where new pavement matches existing pavement a thickened edge will be required per MAG Standard Detail 201, Type A. A thickened edge shall be used at each bridge approach.
12. Contractor shall be aware that all topographic information shown and used for this design/plans may have changed due to adjacent construction activity and therefore shall verify all sited and field conditions (e.g., trees, fences...etc.) prior to work.

The following parameters were used for the basis of this survey:

System: United States State Plane, Arizona East Zone
Horizontal Datum: NAD83
Vertical Datum: NAVD88
Units: International Feet (1 Foot = 0.3048 Meters Exactly)

Basis of Elevations:
An elevation of 5431.477 was held on NGS control point WHISPER

All bearings are grid bearings. Distances are ground distances and coordinates are ground coordinates. The GAF is 1.00022498.

The field portion of this survey was performed during March 2018.

The basis of coordinates and elevations for this project are from National Geodetic Survey (NGS) Data sheets for Monument DN3563

NGS point WHISPER
Brass cap in Rock out crop stamped "WHISPER 2004 RLS 14169"

NAD 83(2011)	POSITION – 34° 22' 39.71834"(N) 111° 17' 16.39761"(W)		
Grid Coordinates	N 1,230,695.59	E 361,695.53	
Ground Coordinates	N 1,229,414.264	E 889,717.3265	

NAVD88 Elevation 5431.477

GEOID: Arizona GEOID 12B

Site Control point

PTID	Northing	Easting	Elev	Description
50	1238506.793	894179.9644	5606.1833	RBR BASE

STORM WATER POLLUTION PREVENTION PLAN

1. The Contractor shall prepare and submit all necessary plans, specifications and permit to the Arizona Department of Environmental Quality.
2. The Contractor shall provide to the Owner a copy of the authorization to begin work from ADEQ and all necessary plans, details, specifications and documents prior to construction.
3. The Contractor shall provide all necessary materials and/or erosion control devices for use in installing the required SWPPP items. The Contractor shall be responsible for the installation and maintenance of all related SWPPP plan elements in accordance with the permit requirements until after the NOT has been submitted to the ADEQ.
4. Upon completion of the work the SWPPP shall be maintained by the Owner.

① CURVE DATA

BRIDGE ROAD CONSTRUCTION CL
PI 11+71.37
N 1240188.5798
E 895601.5013

MAIN CURVE
Δ=52°49'49"Rt
D=229°10'59"
R=25.00'
L=23.05'
T=12.42'
Ext=2.91'

③ CURVE DATA

DRIVEWAY CONSTRUCTION CL
PI 19+81.16
N 1240155.0407
E 895607.2664

MAIN CURVE
Δ=62°12'48"Lt
D=636°37'11"
R=9.00'
L=9.77'
T=5.43'
Ext=1.51'

② CURVE DATA

BRIDGE ROAD CONSTRUCTION CL
PI 14+06.65
N 1240234.1131
E 895834.1576

MAIN CURVE
Δ=22°48'10"Lt
D=22°55'06"
R=250.00'
L=99.50'
T=50.42'
Ext=5.03'

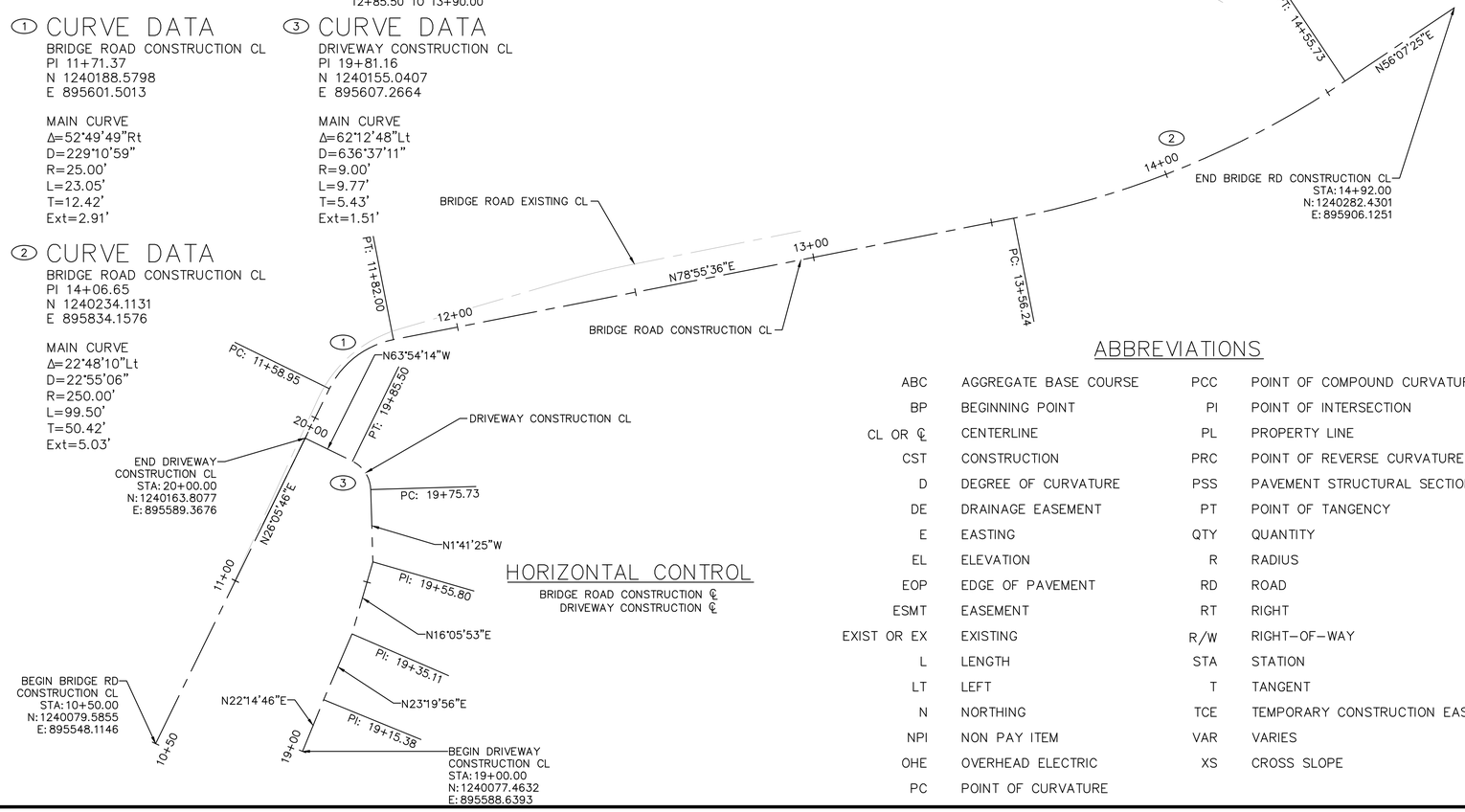

HORIZONTAL CONTROL

BRIDGE ROAD CONSTRUCTION ℄
DRIVEWAY CONSTRUCTION ℄

ABBREVIATIONS

ABC	AGGREGATE BASE COURSE	PCC	POINT OF COMPOUND CURVATURE
BP	BEGINNING POINT	PI	POINT OF INTERSECTION
CL OR ℄	CENTERLINE	PL	PROPERTY LINE
CST	CONSTRUCTION	PRC	POINT OF REVERSE CURVATURE
D	DEGREE OF CURVATURE	PSS	PAVEMENT STRUCTURAL SECTION
DE	DRAINAGE EASEMENT	PT	POINT OF TANGENCY
E	EASTING	QTY	QUANTITY
EL	ELEVATION	R	RADIUS
EOP	EDGE OF PAVEMENT	RD	ROAD
ESMT	EASEMENT	RT	RIGHT
EXIST OR EX	EXISTING	R/W	RIGHT–OF–WAY
L	LENGTH	STA	STATION
LT	LEFT	T	TANGENT
N	NORTHING	TCE	TEMPORARY CONSTRUCTION EASEMENT
NPI	NON PAY ITEM	VAR	VARIES
OHE	OVERHEAD ELECTRIC	XS	CROSS SLOPE
PC	POINT OF CURVATURE		

CALL TWO WORKING DAYS BEFORE YOU DIG
602-263-1100
1-800-STAKE-IT
(OUTSIDE MARICOPA COUNTY)

Registered Professional Engineer (Civil) CERTIFICATE NO. 59615 TAYLOR EHRICK Date Signed 05/08/20 ARIZONA, U.S.A.

Kimley»Horn

© 2020 KIMLEY–HORN & ASSOCIATES, INC.
7740 N. 16TH STREET, SUITE 300, PHOENIX, AZ 85020
PHONE: 602–944–5500 | WWW.KIMLEY–HORN.COM

GILA COUNTY
745 ROSE MOFFORD WAY
GLOBE, AZ 85501

DESIGN: TRE	DRAWN: MPF	CHK: DJL	DATE: 05/08/2020
REV	DESCRIPTION	BY	DATE:

GENERAL NOTES, PROJECT CONTROL & TYPICAL SECTIONS

GILA COUNTY
RIM TRAIL BRIDGE REPLACEMENT

PROJECT NO. ADSPO17-00006796
DATE: 05/20

SHEET NO.
2 of 28

K:\PHX_Roadway\291233000-Rim Trail Bridge\Cadd\12-Sheets\Roadway\291233000-GN01.dwg 5/8/2020 1:09 PM FLOOD, MARK

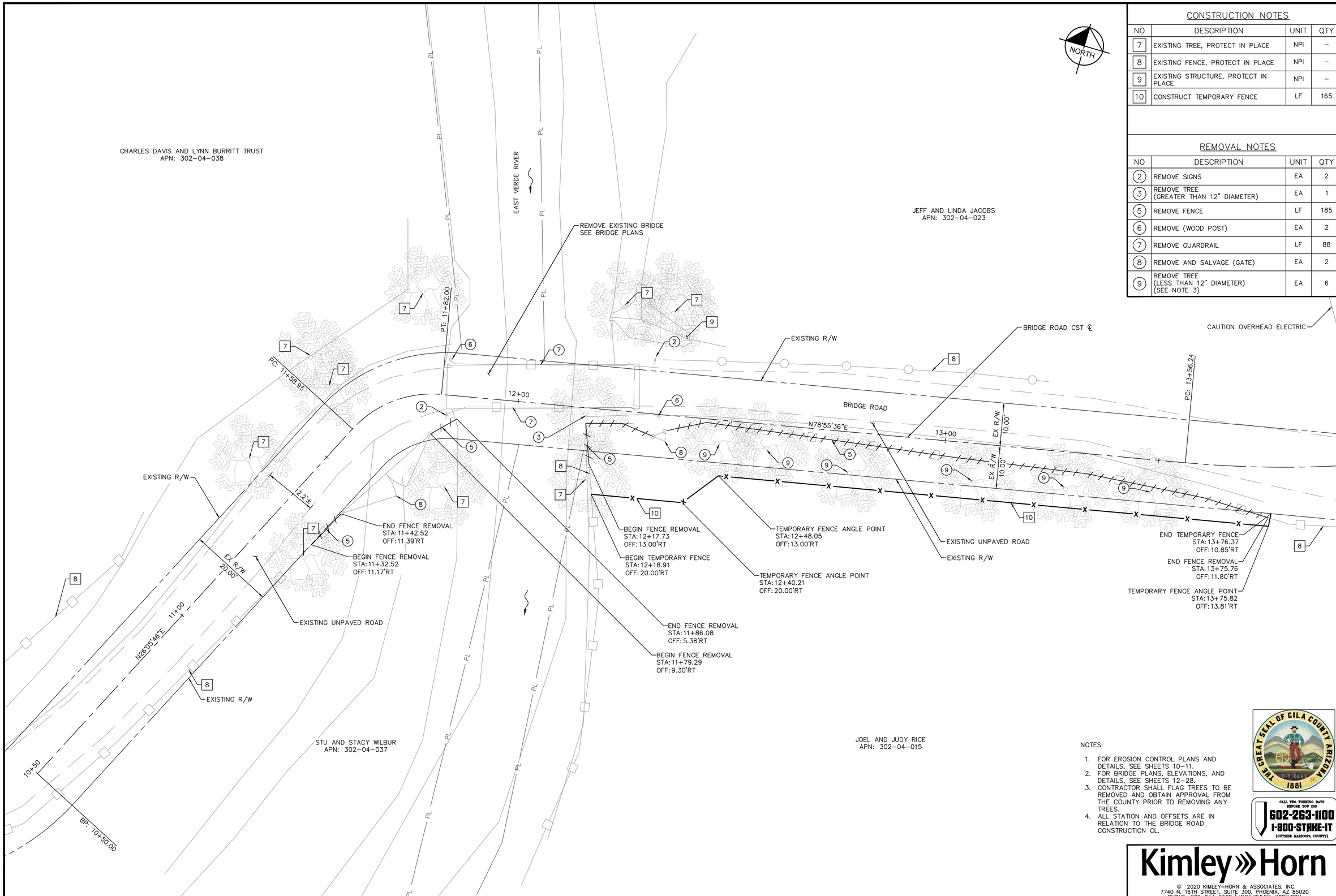

CONSTRUCTION NOTES

NO	DESCRIPTION	UNIT	QTY
7	EXISTING TREE, PROTECT IN PLACE	NPI	–
8	EXISTING FENCE, PROTECT IN PLACE	NPI	–
9	EXISTING STRUCTURE, PROTECT IN PLACE	NPI	–
10	CONSTRUCT TEMPORARY FENCE	LF	165

REMOVAL NOTES

NO	DESCRIPTION	UNIT	QTY
2	REMOVE SIGNS	EA	2
3	REMOVE TREE (GREATER THAN 12" DIAMETER)	EA	1
5	REMOVE FENCE	LF	185
6	REMOVE (WOOD POST)	EA	2
7	REMOVE GUARDRAIL	LF	88
8	REMOVE AND SALVAGE (GATE)	EA	2
9	REMOVE TREE (LESS THAN 12" DIAMETER) (SEE NOTE 3)	EA	6

NOTES:

1. FOR EROSION CONTROL PLANS AND DETAILS, SEE SHEETS 10–11.
2. FOR BRIDGE PLANS, ELEVATIONS, AND DETAILS, SEE SHEETS 12–28.
3. CONTRACTOR SHALL FLAG TREES TO BE REMOVED AND OBTAIN APPROVAL FROM THE COUNTY PRIOR TO REMOVING ANY TREES.
4. ALL STATION AND OFFSETS ARE IN RELATION TO THE BRIDGE ROAD CONSTRUCTION CL.

CALL TWO WORKING DAYS BEFORE YOU DIG
602-263-1100
1-800-STAKE-IT
(OUTSIDE MARICOPA COUNTY)

Kimley»Horn

© 2020 KIMLEY-HORN & ASSOCIATES, INC.
7740 N. 16TH STREET, SUITE 300, PHOENIX, AZ 85020
PHONE: 602-944-5500 | WWW.KIMLEY-HORN.COM

GILA COUNTY
745 ROSE MOFFORD WAY
GLOBE, AZ 85501

REV	DESCRIPTION	BY	DATE:

DESIGN: TRE | DRAWN: MPF | CHK: DJL | DATE: 05/08/2020

ROADWAY REMOVAL SHEET

GILA COUNTY
RIM TRAIL BRIDGE REPLACEMENT

PROJECT NO. ADSPO17-00006796

DATE: 05/20

Registered Professional Engineer
CERTIFICATE NO. 59615
TAYLOR EHRICK
Date Signed 05/08/20
ARIZONA, U.S.A.

SHEET NO.
3 of 28

K:\PHX_Roadway\291233000-Rim Trail Bridge\Cadd\12-Sheets\Roadway\291233000-DM01.dwg 5/8/2020 3:08 PM FLOOD, MARK

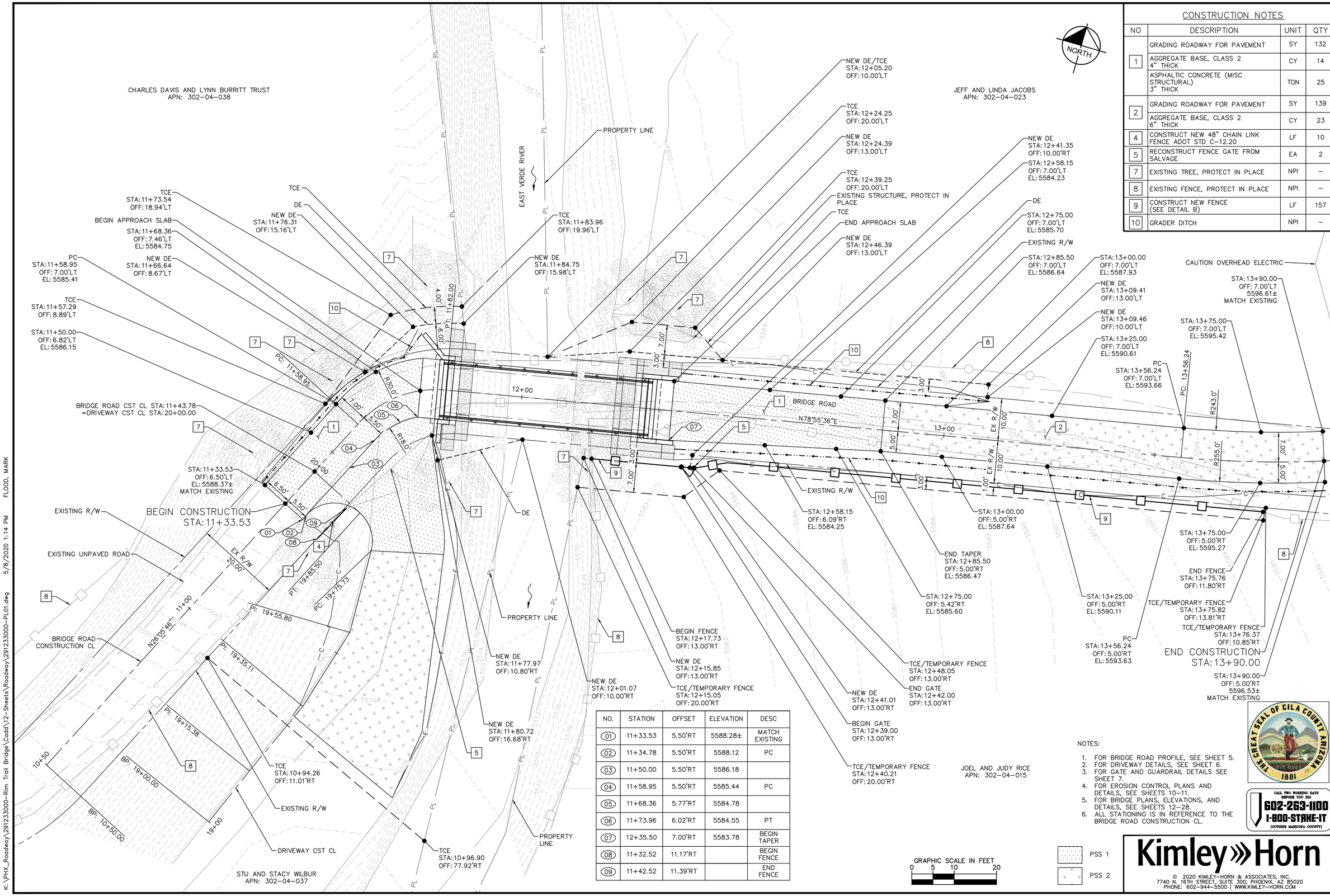

CONSTRUCTION NOTES

NO	DESCRIPTION	UNIT	QTY
1	GRADING ROADWAY FOR PAVEMENT	SY	132
	AGGREGATE BASE, CLASS 2 4" THICK	CY	14
	ASPHALTIC CONCRETE (MISC STRUCTURAL) 3" THICK	TON	25
2	GRADING ROADWAY FOR PAVEMENT	SY	139
	AGGREGATE BASE, CLASS 2 6" THICK	CY	23
4	CONSTRUCT NEW 48" CHAIN LINK FENCE ADOT STD C-12.20	LF	10
5	RECONSTRUCT FENCE GATE FROM SALVAGE	EA	2
7	EXISTING TREE, PROTECT IN PLACE	NPI	–
8	EXISTING FENCE, PROTECT IN PLACE	NPI	–
9	CONSTRUCT NEW FENCE (SEE DETAIL B)	LF	157
10	GRADER DITCH	NPI	–

NO.	STATION	OFFSET	ELEVATION	DESC
01	11+33.53	5.50'RT	5588.28±	MATCH EXISTING
02	11+34.78	5.50'RT	5588.12	PC
03	11+50.00	5.50'RT	5586.18	
04	11+58.95	5.50'RT	5585.44	PC
05	11+68.36	5.77'RT	5584.78	
06	11+73.96	6.02'RT	5584.55	PT
07	12+35.50	7.00'RT	5583.78	BEGIN TAPER
08	11+32.52	11.17'RT		BEGIN FENCE
09	11+42.52	11.39'RT		END FENCE

NOTES:

1. FOR BRIDGE ROAD PROFILE, SEE SHEET 5.
2. FOR DRIVEWAY DETAILS, SEE SHEET 6.
3. FOR GATE AND GUARDRAIL DETAILS SEE SHEET 7.
4. FOR EROSION CONTROL PLANS AND DETAILS, SEE SHEETS 10–11.
5. FOR BRIDGE PLANS, ELEVATIONS, AND DETAILS, SEE SHEETS 12–28.
6. ALL STATIONING IS IN REFERENCE TO THE BRIDGE ROAD CONSTRUCTION CL.

CALL TWO WORKING DAYS BEFORE YOU DIG
602-263-1100
1-800-STAKE-IT
(OUTSIDE MARICOPA COUNTY)

Kimley»Horn

© 2020 KIMLEY-HORN & ASSOCIATES, INC.
7740 N. 16TH STREET, SUITE 300, PHOENIX, AZ 85020
PHONE: 602-944-5500 | WWW.KIMLEY-HORN.COM

GILA COUNTY
745 ROSE MOFFORD WAY
GLOBE, AZ 85501

REV	DESCRIPTION	BY	DATE:

DESIGN: TRE | DRAWN: MPF | CHK: DJL | DATE: 05/08/2020

ROADWAY PLAN SHEET

GILA COUNTY
RIM TRAIL BRIDGE REPLACEMENT

PROJECT NO. ADSPO17-00006796

DATE: 05/20

Registered Professional Engineer (Civil)
CERTIFICATE NO. 59615
TAYLOR EHRICK
Date Signed 05/08/20
ARIZONA, U.S.A.

SHEET NO.
4 of 28

K:\PHX_Roadway\291233000-Rim Trail Bridge\Cadd\12-Sheets\Roadway\291233000-PL01.dwg 5/8/2020 1:14 PM FLOOD, MARK

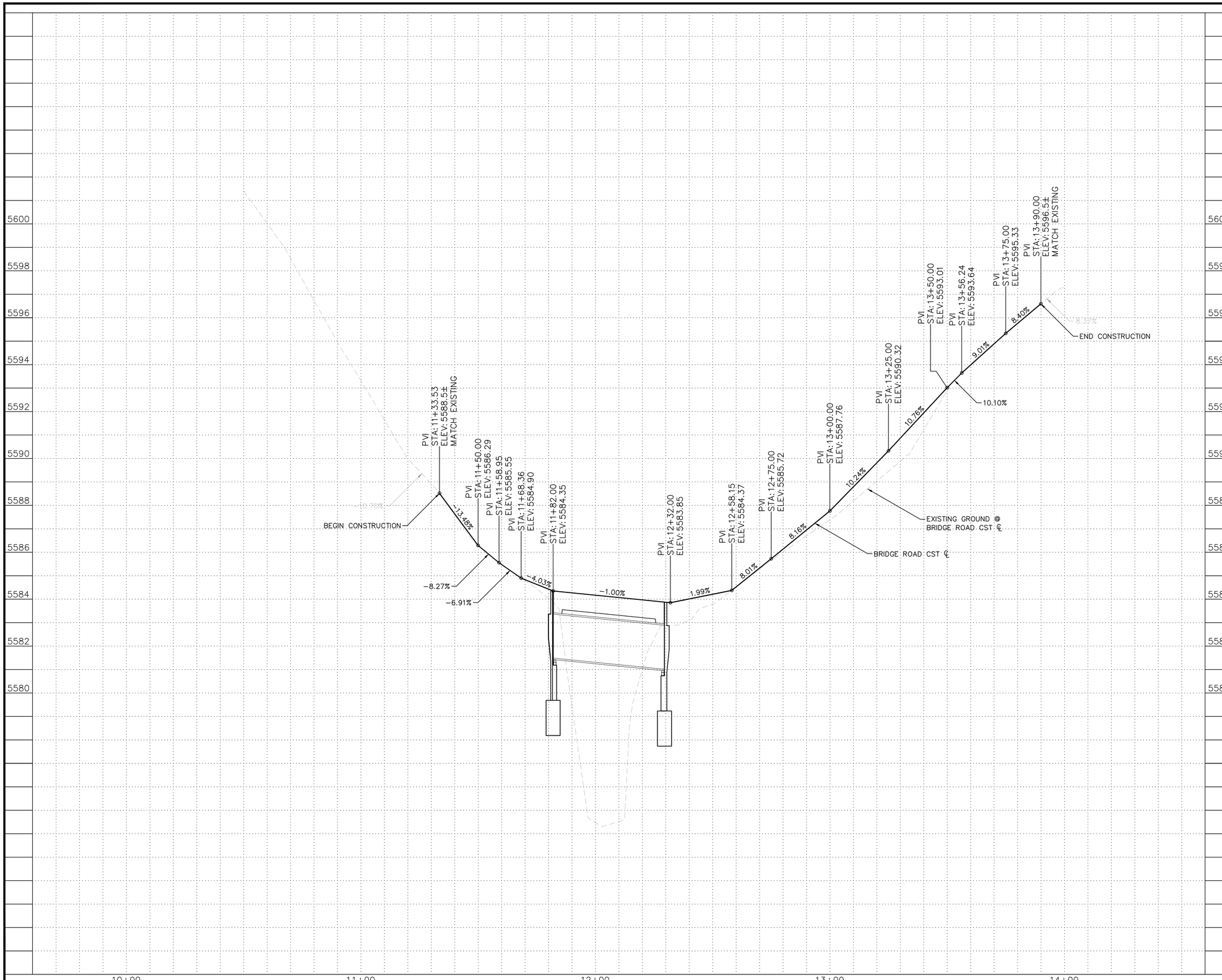

NOTES:

1. FOR ROADWAY PLAN, SEE SHEET 4.
2. FOR BRIDGE PLANS, ELEVATIONS, AND DETAILS, SEE SHEETS 12–28.
3. ALL STATIONING IS IN REFERENCE TO BRIDGE ROAD CONSTRUCTION CL.

(HORIZONTAL SCALE)
GRAPHIC SCALE IN FEET
0 10 20 40

(VERTICAL SCALE)
GRAPHIC SCALE IN FEET
0 1 2 4

THE GREAT SEAL OF GILA COUNTY ARIZONA
DITAT DEUS
1881

CALL TWO WORKING DAYS BEFORE YOU DIG
602-263-1100
1-800-STAKE-IT
(OUTSIDE MARICOPA COUNTY)

Kimley»Horn

© 2020 KIMLEY-HORN & ASSOCIATES, INC.
7740 N. 16TH STREET, SUITE 300, PHOENIX, AZ 85020
PHONE: 602-944-5500 | WWW.KIMLEY-HORN.COM

GILA COUNTY
745 ROSE MOFFORD WAY
GLOBE, AZ 85501

DESIGN: TRE	DRAWN: MPF	CHK: DJL	DATE: 05/08/2020
REV	DESCRIPTION	BY	DATE:

ROADWAY PROFILE SHEET

GILA COUNTY
RIM TRAIL BRIDGE REPLACEMENT

PROJECT NO. ADSPO17-00006796

DATE: 05/20

Registered Professional Engineer (Civil)
CERTIFICATE NO. 59615
TAYLOR EHRICK
Date Signed 05/08/20
ARIZONA, U.S.A.

SHEET NO.
5 of 28

K:\PHX_Roadway\291233000-Rim Trail Bridge\Cadd\12-Sheets\Roadway\291233000-PR01.dwg 5/8/2020 3:08 PM FLOOD, MARK

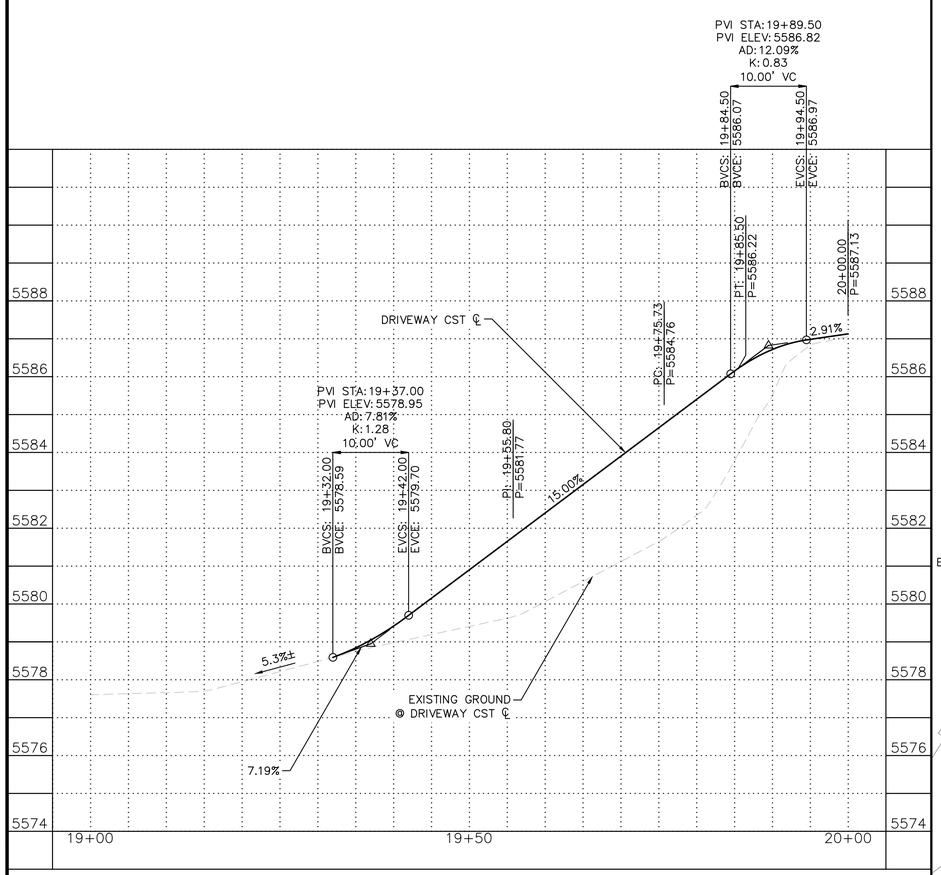

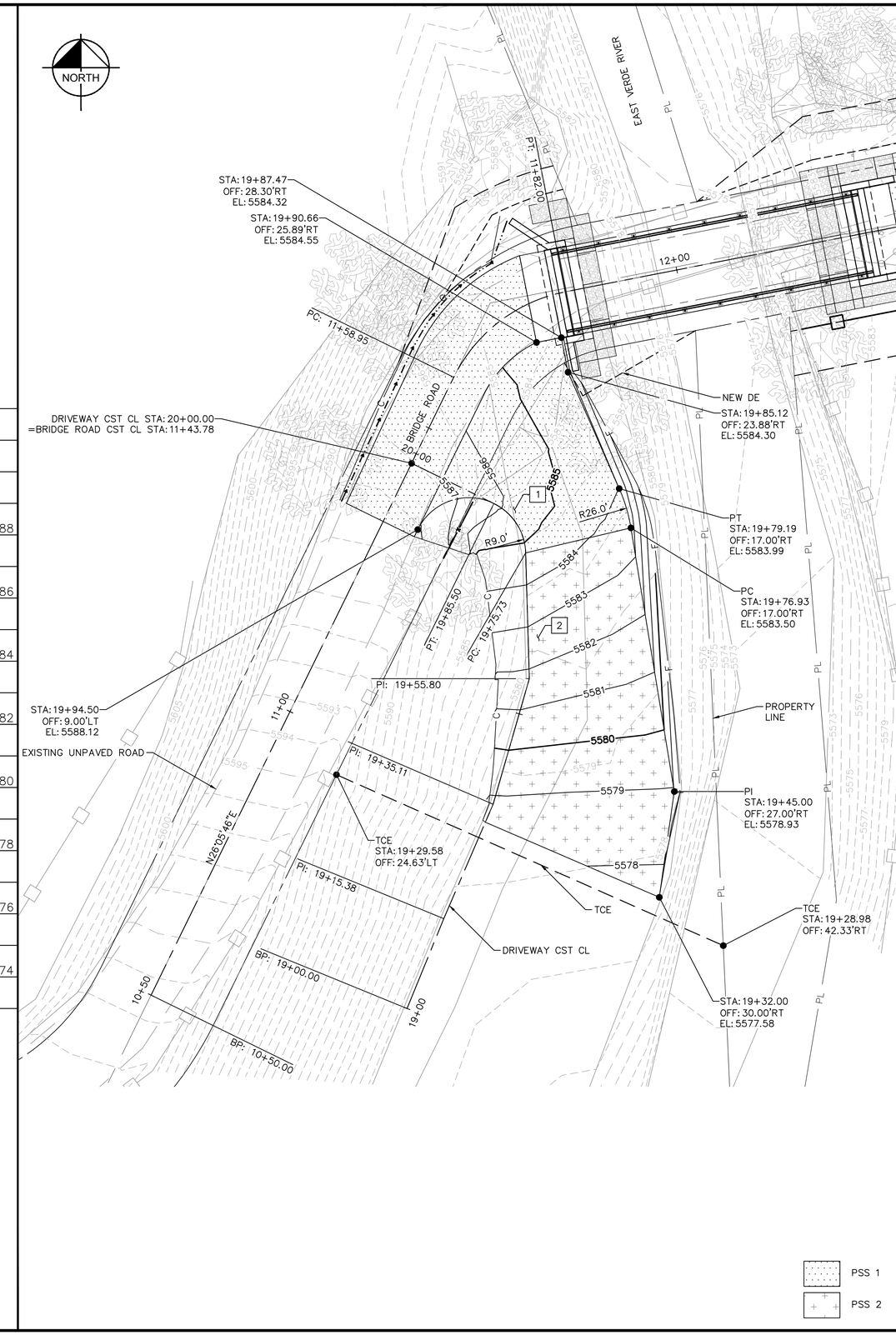

CONSTRUCTION NOTES

NO	DESCRIPTION	UNIT	QTY
1	GRADING ROADWAY FOR PAVEMENT	SY	65
	AGGREGATE BASE, CLASS 2 4" THICK	CY	7
	ASPHALTIC CONCRETE (MISC STRUCTURAL) 3" THICK	TON	11
2	GRADING ROADWAY FOR PAVEMENT	SY	128
	AGGREGATE BASE, CLASS 2 6" THICK	CY	21

NOTES:

1. FOR ROADWAY PLAN, SEE SHEET 4.
2. FOR EROSION CONTROL PLANS AND DETAILS, SEE SHEETS 10–11.
3. FOR BRIDGE PLANS, ELEVATIONS, AND DETAILS, SEE SHEETS 12–28.
4. ALL STATIONING IS IN REFERENCE TO DRIVEWAY CONSTRUCTION CL.

(HORIZONTAL SCALE)
GRAPHIC SCALE IN FEET
0 5 10 20

(VERTICAL SCALE)
GRAPHIC SCALE IN FEET
0 1 2 4

PSS 1
PSS 2

CALL TWO WORKING DAYS BEFORE YOU DIG
602-263-1100
1-800-STAKE-IT
(OUTSIDE MARICOPA COUNTY)

Kimley»Horn

© 2020 KIMLEY-HORN & ASSOCIATES, INC.
7740 N. 16TH STREET, SUITE 300, PHOENIX, AZ 85020
PHONE: 602-944-5500 | WWW.KIMLEY-HORN.COM

GILA COUNTY
745 ROSE MOFFORD WAY
GLOBE, AZ 85501

REV	DESCRIPTION	BY	DATE:

DESIGN: TRE | DRAWN: MPF | CHK: DJL | DATE: 05/08/2020

DRIVEWAY DETAIL SHEET

GILA COUNTY
RIM TRAIL BRIDGE REPLACEMENT

PROJECT NO. ADSPO17-00006796
DATE: 05/20

Registered Professional Engineer
CERTIFICATE NO. 59615
TAYLOR EHRICK
Date Signed 05/08/20
ARIZONA, U.S.A.

SHEET NO.
6 of 28

FLOOD, MARK
5/8/2020 1:20 PM
K:\PHX_Roadway\291233000-Rim Trail Bridge\Cadd\12-Sheets\Roadway\291233000-DT02.dwg

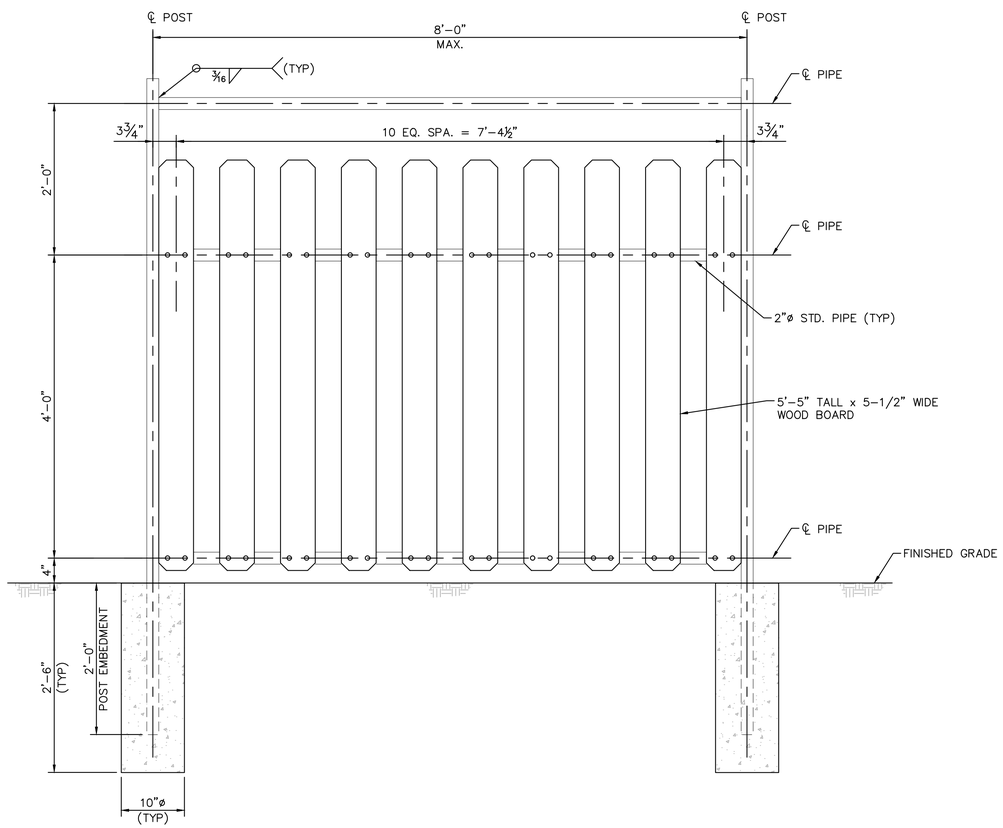

FENCE ELEVATION

SCALE: 1" = 1'-0"

DETAIL A

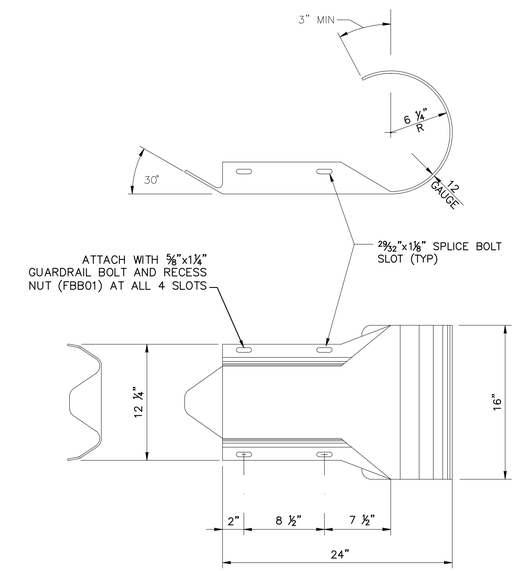

W-BEAM END SECTION (ROUNDED) (RWE03a)

SCALE: 1 1/2" = 1'-0"

DETAIL B

THE GREAT SEAL OF GILA COUNTY ARIZONA
DITAT DEUS
1881

CALL TWO WORKING DAYS BEFORE YOU DIG
602-263-1100
1-800-STAKE-IT
(OUTSIDE MARICOPA COUNTY)

Kimley»Horn

© 2020 KIMLEY-HORN & ASSOCIATES, INC.
7740 N. 16TH STREET, SUITE 300, PHOENIX, AZ 85020
PHONE: 602-944-5500 | WWW.KIMLEY-HORN.COM

GILA COUNTY
745 ROSE MOFFORD WAY
GLOBE, AZ 85501

DESIGN: TRE | DRAWN: MPF | CHK: DJL | DATE: 05/08/2020

REV	DESCRIPTION	BY	DATE:

DETAIL SHEET

GILA COUNTY
RIM TRAIL BRIDGE REPLACEMENT

PROJECT NO. ADSPO17-00006796

DATE: 05/20

Registered Professional Engineer (Civil) CERTIFICATE NO. 37422 DAVID J. LEISTIKO Date Signed 05/08/20 ARIZONA, U.S.A.

SHEET NO.

K:\PHX_Roadway\291233000-Rim Trail Bridge\Cadd\12-Sheets\Roadway\291233000-DT01.dwg 5/8/2020 3:39 PM FLOOD, MARK

EROSION AND SEDIMENT CONTROL PLAN
FOR
RIM TRAIL BRIDGE REPLACEMENT
STRUCTURE NO. 7881
GLOBE, ARIZONA

EROSION AND SEDIMENT CONTROL PLAN NOTES:

1. The Owner/Operator or Contractor shall notify the Gila County representative assigned to the site 24 hours prior to commencing any land development or grading activities. Note: A Notice of Intent (NOI) shall be submitted to and approved by the Arizona Department of Environmental Quality (ADEQ) prior to commencing land development or grading activities.
2. A copy of the approved grading and drainage plan for this project, along with a copy of an approved NOI, the Erosion and Sediment Control Plan (ESCP) and the Storm Water Pollution Prevention Plan (SWPPP) shall be maintained on the site and available for review by representatives of the Gila County and the Arizona Department of Environmental Quality. Those elements of the grading and drainage plan pertinent to, or referenced on the ESCP shall be considered a part of the ESCP.
3. The Owner/Operator of Contractor shall post a sign or other notice near the main entrance of the construction site with the following information: AZPDES authorization number for the project or copy of the Notice of Intent, the name and telephone number of a local office or on-site contact person; a description of the type of construction project; and the location of the SWPPP.
4. Details, standards, and specifications for applicable Best Management Practices (BMP's) to be implemented on-site shall be illustrated on the ESCP sheets. Additional details, standards, and specifications for BMP's implemented on-site following final submittal of the ESCP shall be added and maintained within the SWPPP.
5. The Owner/Operator or Contractor shall perform, at a minimum, a visual inspection of the construction site once every fourteen days and also within 24 hours of a rainfall event greater than or equal to a half of an inch or more. The Owner/Operator or Contractor shall prepare an inspection report documenting his/her findings on the conditions of the SWPPP controls and note any location(s) of discharge of sediment or other pollutants from the site, BMP's that require maintenance, additional BMP's needed, corrective actions required and identification of all sources of non-storm water discharges and the associated pollution prevention control measures and identification of evidence of or potential for pollutant discharge from the site.
6. The Owner/Operator or Contractor shall amend the SWPPP as necessary during the course of construction if there are changes at the site that has a significant effect on the discharge of pollutants or if inspections or investigations have determined that the SWPPP is no longer effective at minimizing pollutants in stormwater discharges from the site.
7. The Owner/Operator or Contractor is required to maintain compliance with all requirements outlined in the Arizona Pollutant Discharge Elimination System (AZPDES) Construction General Permit administered by ADEQ.
8. The Owner/Operator or Contractor shall submit a Notice of Termination (NOT) following completion of construction and permanent stabilization as outlined in the Arizona Pollutant Discharge Elimination System (AZPDES) Construction General Permit administered by ADEQ.

STANDARD DETAILS, SPECIFICATIONS, BEST MANAGEMENT PRACTICES AND APPLICABLE LAW

Work shall be done in accordance with this plan, the following specifications & details and applicable law.

1. Best Management Practices will be followed as outlined in this ESCP and the SWPPP.
2. The following on-site management practices should be considered whenever possible to limit the exposure of the site to erosion, sedimentation, and discharges of pollutants and/or wastes.

   A. Sequence construction activities so that disturbed areas are not exposed for extended periods of time.
   B. Schedule landscaping and other work that permanently stabilizes disturbed areas immediately following land development activities and final contour.
   C. Implement temporary stabilization practices when disturbed areas will be exposed for periods greater than 14 days.
   D. Install and maintain BMP's to control erosion, sedimentation, and discharges of pollutants and/or wastes.

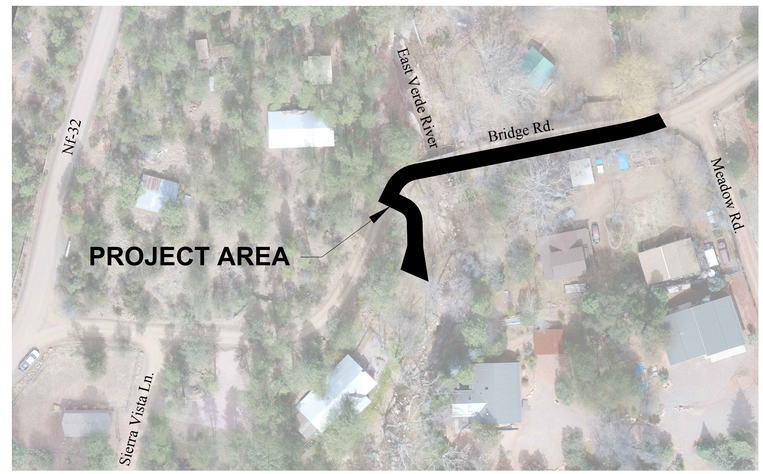

VICINITY MAP

INDEX OF SHEETS	
SHEET NO.	DESCRIPTION
8	COVER SHEET
9	SEDIMENT WATTLE DETAIL
10	EROSION CONTROL PLAN SHEET
11	FINAL STABILIZATION PLAN SHEET

OWNER/DEVELOPER
Mark Guerena, P.E., R.L.S.
Gila County
745 N. Rose Mofford Way
Globe, AZ 85501
(928) 402-8507

LANDSCAPE ARCHITECT
Anne S. DeBoard, PLA
Kimley-Horn and Associates, Inc.
7740 N. 16th Street, Suite 300
Phoenix, AZ 85020
(602) 944-5500

SYMBOL	LEGEND	UNITS	QTY
	Indicates Contour Line		
	Indicates Boundary		
WATTLE	Indicates Wattle (9")	LF	390
	Indicates Rock Mulch (Gradation C)	CY	21
	Indicates Decomposed Granite (2" Depth)	SY	243

CALL TWO WORKING DAYS BEFORE YOU DIG
602-263-1100
1-800-STAKE-IT
(OUTSIDE MARICOPA COUNTY)

Kimley»Horn

© 2020 KIMLEY-HORN & ASSOCIATES, INC.

7740 N. 16TH STREET, SUITE 300, PHOENIX, AZ 85020
PHONE: 602-944-5500 | WWW.KIMLEY-HORN.COM

GILA COUNTY
745 ROSE MOFFORD WAY
GLOBE, AZ 85501

REV	DESCRIPTION	BY	DATE:

DESIGN: ASD | DRAWN: MPF | CHK: DJL | DATE: 05/08/2020

EROSION AND SEDIMENT CONTROL COVER SHEET

GILA COUNTY
RIM TRAIL BRIDGE REPLACEMENT

PROJECT NO. ADSPO17-00006796
DATE: 05/20

REGISTERED LANDSCAPE ARCHITECT
50615
ANNE S. DEBOARD
Date Signed 5/8/2020
ARIZONA, U.S.A.

SHEET NO.
8 of 28

K:\PHX_Roadway\291233000-Rim Trail Bridge\Cadd\12-Sheets\Landscape\291233000-CV01.dwg 5/8/2020 11:41 AM FLOOD, MARK

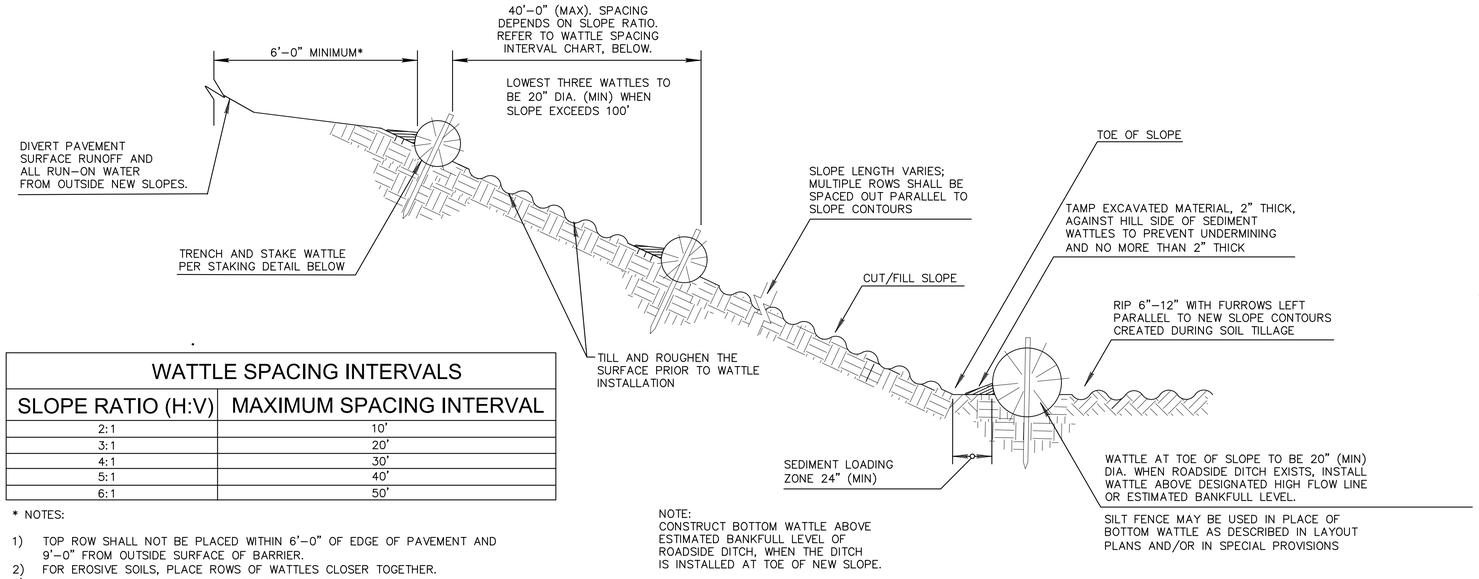

SECTION (NTS)

WATTLE SPACING INTERVALS	
SLOPE RATIO (H:V)	MAXIMUM SPACING INTERVAL
2:1	10'
3:1	20'
4:1	30'
5:1	40'
6:1	50'

* NOTES:

1) TOP ROW SHALL NOT BE PLACED WITHIN 6'–0" OF EDGE OF PAVEMENT AND 9'–0" FROM OUTSIDE SURFACE OF BARRIER.
2) FOR EROSIVE SOILS, PLACE ROWS OF WATTLES CLOSER TOGETHER.
3) FOR SOILS WITH LOW EROSIVE POTENTIAL, PLACE ROWS OF WATTLES FURTHER APART.

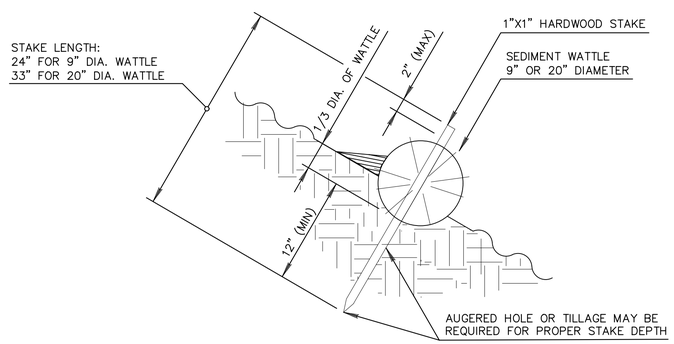

SEDIMENT WATTLE STAKING DETAIL (NTS)

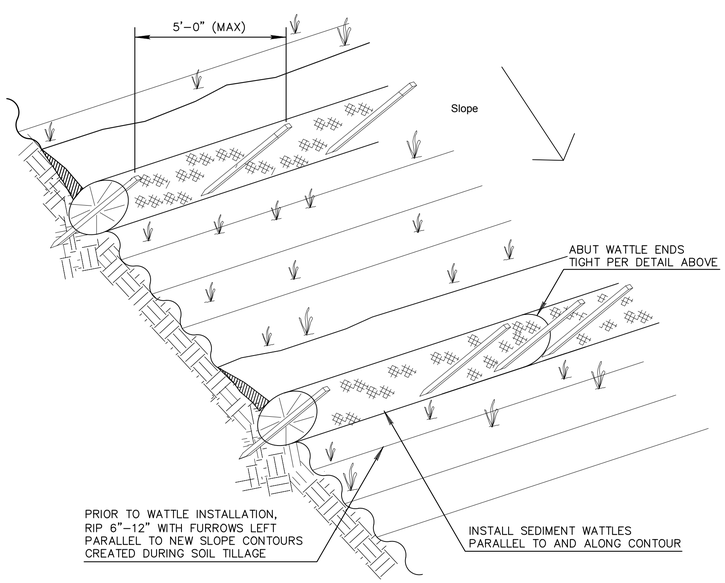

SEDIMENT WATTLE LAYOUT (NTS)

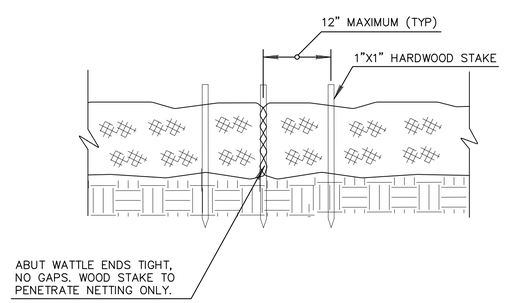

SEDIMENT WATTLE OVERLAP (NTS)

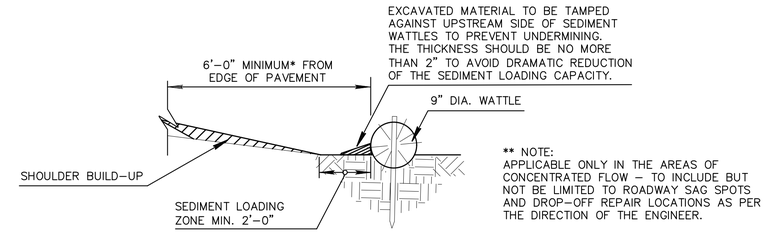

NEW SHOULDER BUILDUP ** PROTECTION SECTION (NTS)

NOTES:

1. INSTALL SEDIMENT WATTLES AS SLOPES ARE CONSTRUCTED TO GRADE OR AS DIRECTED BY THE ENGINEER. SELECT, INSTALL AND MAINTAIN IN CONFORMANCE WITH MANUFACTURERS' SPECIFICATIONS TO MEET SITE CONDITIONS FOR SLOPE PROTECTION AND IN ACCORDANCE WITH GOOD ENGINEERING PRACTICES. NO SEDIMENT WATTLES SHALL BE INSTALLED IN URBAN FREEWAY MEDIANS, NOR WHERE CABLE BARRIER SYSTEMS ARE EMPLOYED.
2. SEDIMENT WATTLES SHALL BE IN CONTINUOUS CONTACT WITH TRENCH BOTTOM AND SIDES. DO NOT OVERLAP WATTLE ENDS ON TOP OF EACH OTHER. A 20" DIA. WATTLE MAY BE MADE FROM 2–3 ROLLED EXCELSIOR OR STRAW BLANKETS.
3. BUTT ADJOINING WATTLES TIGHTLY AGAINST EACH OTHER. DRIVE THE FIRST END STAKE OF THE SECOND WATTLE AT AN ANGLE TOWARD THE FIRST WATTLE TO HELP ABUT THEM TIGHTLY.
4. REPAIR ANY RILLS OR GULLIES PROMPTLY. MAKE FIELD ADJUSTMENTS AND CORRECTIONS OF WATTLE BMP IMMEDIATELY IF IT IS CAUSING FLOODING, EROSION, AND/OR AFFECTING ROADWAY SAFETY.
5. CONSTRUCTION OF CUT SLOPES 2:1 AND STEEPER IN SOIL AND ROCK MATERIALS THAT CAN BE RIPPED SHALL BE CONSTRUCTED, WHENEVER POSSIBLE, BY MINIBENCHING. REFER TO SLOPE MINIBENCHING BMP DETAIL.
6. LOOSENING SURFACE SOIL IS NOT REQUIRED WHERE MINIBENCHES ARE USED. FOR SEEDED AREAS, TILLAGE SHALL BE PERFORMED TO FORM MINOR RIDGES AND FURROWS PARALLEL TO NEW SLOPE CONTOURS AND AS SPECIFIED IN SECTION 805 OF THE STANDARD SPECIFICATIONS AND THESE SPECIAL PROVISIONS.
7. DIVERT AND DIRECT RUN–ON WATER FROM OUTSIDE OF THE SLOPES TO THE SPILLWAYS AND/OR ROCK RIPRAP/ROCK MULCH. DIVERSION DIKES AND/OR DITCHES ARE NECESSARY ON NATURAL UNDISTURBED SLOPES BEYOND THE TOP LIMITS OF NEW SLOPES TO DIVERT RUN–ON WATER.
8. INSTALLATION AND MAINTENANCE OF SEDIMENT WATTLE BMPS SHALL NOT NEGATIVELY IMPACT TRAFFIC SAFETY, NOR THE DESIGNED FUNCTION OF ROADWAY OR BRIDGE DRAINAGE FACILITIES.
9. INSTALL AND MAINTAIN SEDIMENT WATTLE BMPS TO CARRY THE STORMWATER OF AT LEAST 2–YEAR, 24–HOUR EVENTS.
10. THE SEDIMENT WATTLE BMP'S PAY/BID ITEM SHALL INCLUDE ALL MATERIALS USED FOR THIS BMP: ALL GROUND PREPARATION, FURNISHING, INSTALLING, MAINTENANCE, FINAL REMOVAL, AND DISPOSAL OF THIS TEMPORARY BMP, AS WELL AS RETURNING THE AREA TO AN ACCEPTABLE CONDITION AS APPROVED BY THE ENGINEER.
11. REFER TO STANDARD SPECIFICATION SECTION 810–2.06(C) FOR SEDIMENT WATTLE MATERIAL SPECIFICATIONS.
12. MAKE FIELD ADJUSTMENTS AND CORRECTIONS TO ENSURE NO SENSITIVE BIOLOGICAL RESOURCES (NATIVE SPECIES / HABITATS) WILL BE ADVERSELY IMPACTED.

THE GREAT SEAL OF GILA COUNTY ARIZONA 1881

CALL TWO WORKING DAYS BEFORE YOU DIG
602-263-1100
1-800-STAKE-IT
(OUTSIDE MARICOPA COUNTY)

REGISTERED LANDSCAPE ARCHITECT CERTIFICATE NO. 50615 ANNE S. DEBOARD Date Signed 05/08/20 ARIZONA, U.S.A.

Kimley»Horn

© 2020 KIMLEY–HORN & ASSOCIATES, INC.
7740 N. 16TH STREET, SUITE 300, PHOENIX, AZ 85020
PHONE: 602–944–5500 | WWW.KIMLEY–HORN.COM

GILA COUNTY
745 ROSE MOFFORD WAY
GLOBE, AZ 85501

REV	DESCRIPTION	BY	DATE:

DESIGN: ASD | DRAWN: MPF | CHK: DJL | DATE: 05/08/2020

SEDIMENT WATTLE DETAIL

GILA COUNTY
RIM TRAIL BRIDGE REPLACEMENT

PROJECT NO. ADSPO17-00006796
DATE: 05/20

SHEET NO.
9 of 28

K:\PHX_Roadway\291233000–Rim Trail Bridge\Cadd\12–Sheets\Landscape\291233000–WD01.dwg 5/8/2020 11:43 AM FLOOD, MARK

CONSTRUCTION NOTES

NO	DESCRIPTION	UNIT	QTY
1	9" SEDIMENT WATTLE	LF	390

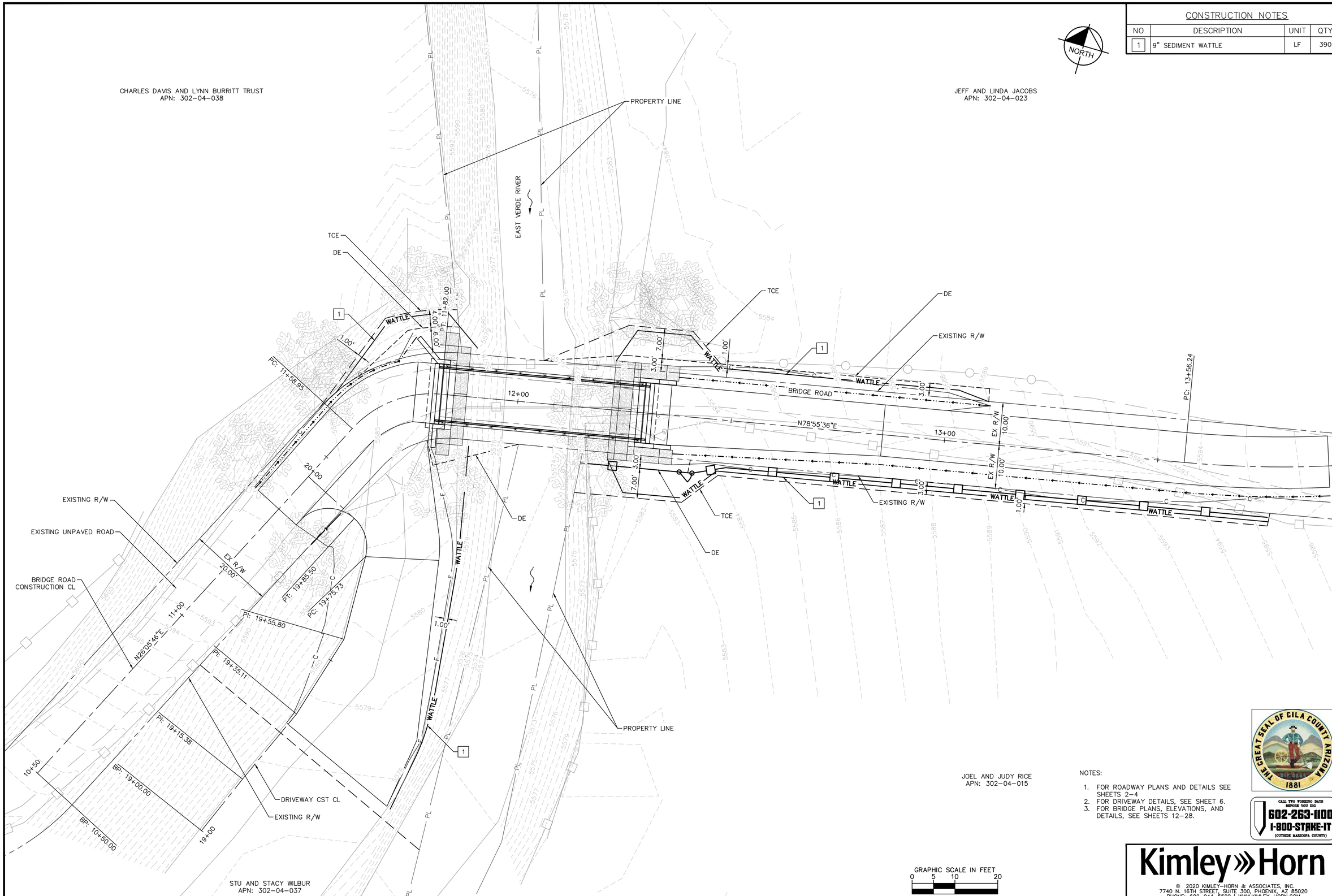

NOTES:

1. FOR ROADWAY PLANS AND DETAILS SEE SHEETS 2–4
2. FOR DRIVEWAY DETAILS, SEE SHEET 6.
3. FOR BRIDGE PLANS, ELEVATIONS, AND DETAILS, SEE SHEETS 12–28.

CALL TWO WORKING DAYS BEFORE YOU DIG
602-263-1100
1-800-STAKE-IT
(OUTSIDE MARICOPA COUNTY)

Kimley»Horn

© 2020 KIMLEY-HORN & ASSOCIATES, INC.
7740 N. 16TH STREET, SUITE 300, PHOENIX, AZ 85020
PHONE: 602-944-5500 | WWW.KIMLEY-HORN.COM

GILA COUNTY
745 ROSE MOFFORD WAY
GLOBE, AZ 85501

DESIGN: ASD | DRAWN: MPF | CHK: DJL | DATE: 05/08/2020

REV	DESCRIPTION	BY	DATE:

EROSION CONTROL PLAN SHEET

GILA COUNTY
RIM TRAIL BRIDGE REPLACEMENT

PROJECT NO. ADSPO17-00006796
DATE: 05/20

REGISTERED LANDSCAPE ARCHITECT
CERTIFICATE NO. 50615
ANNE S. DEBOARD
Date Signed 05/08/2020
ARIZONA, U.S.A.

SHEET NO.
10 of 28

K:\PHX_Roadway\291233000-Rim Trail Bridge\Cadd\12-Sheets\Landscape\291233000-EC01.dwg 5/8/2020 12:31 PM FLOOD, MARK

CONSTRUCTION NOTES

NO	DESCRIPTION	UNIT	QTY
1	DECOMPOSED GRANITE (2" DEPTH)	SY	243
2	ROCK MULCH (GRADATION C)	CY	21

NOTES:

1. FOR ROADWAY PLANS AND DETAILS SEE SHEETS 2–4
2. FOR DRIVEWAY DETAILS, SEE SHEET 6.
3. FOR BRIDGE PLANS, ELEVATIONS, AND DETAILS, SEE SHEETS 12–28.

CALL TWO WORKING DAYS BEFORE YOU DIG
602-263-1100
1-800-STAKE-IT
(OUTSIDE MARICOPA COUNTY)

Kimley»Horn

© 2020 KIMLEY-HORN & ASSOCIATES, INC.
7740 N. 16TH STREET, SUITE 300, PHOENIX, AZ 85020
PHONE: 602-944-5500 | WWW.KIMLEY-HORN.COM

REGISTERED LANDSCAPE ARCHITECT
CERTIFICATE NO. 50615
ANNE S. DEBOARD
Date Signed 05/08/2020
ARIZONA, U.S.A.

GILA COUNTY
745 ROSE MOFFORD WAY
GLOBE, AZ 85501

REV	DESCRIPTION	BY	DATE:

DESIGN: ASD | DRAWN: MPF | CHK: DJL | DATE: 05/08/2020

FINAL STABILIZATION PLAN SHEET

GILA COUNTY
RIM TRAIL BRIDGE REPLACEMENT

PROJECT NO. ADSPO17-00006796
DATE: 05/20

SHEET NO.
11 of 28

K:\PHX_Roadway\291233000-Rim Trail Bridge\Cadd\12-Sheets\Landscape\291233000-FS01.dwg 5/8/2020 12:35 PM FLOOD, MARK

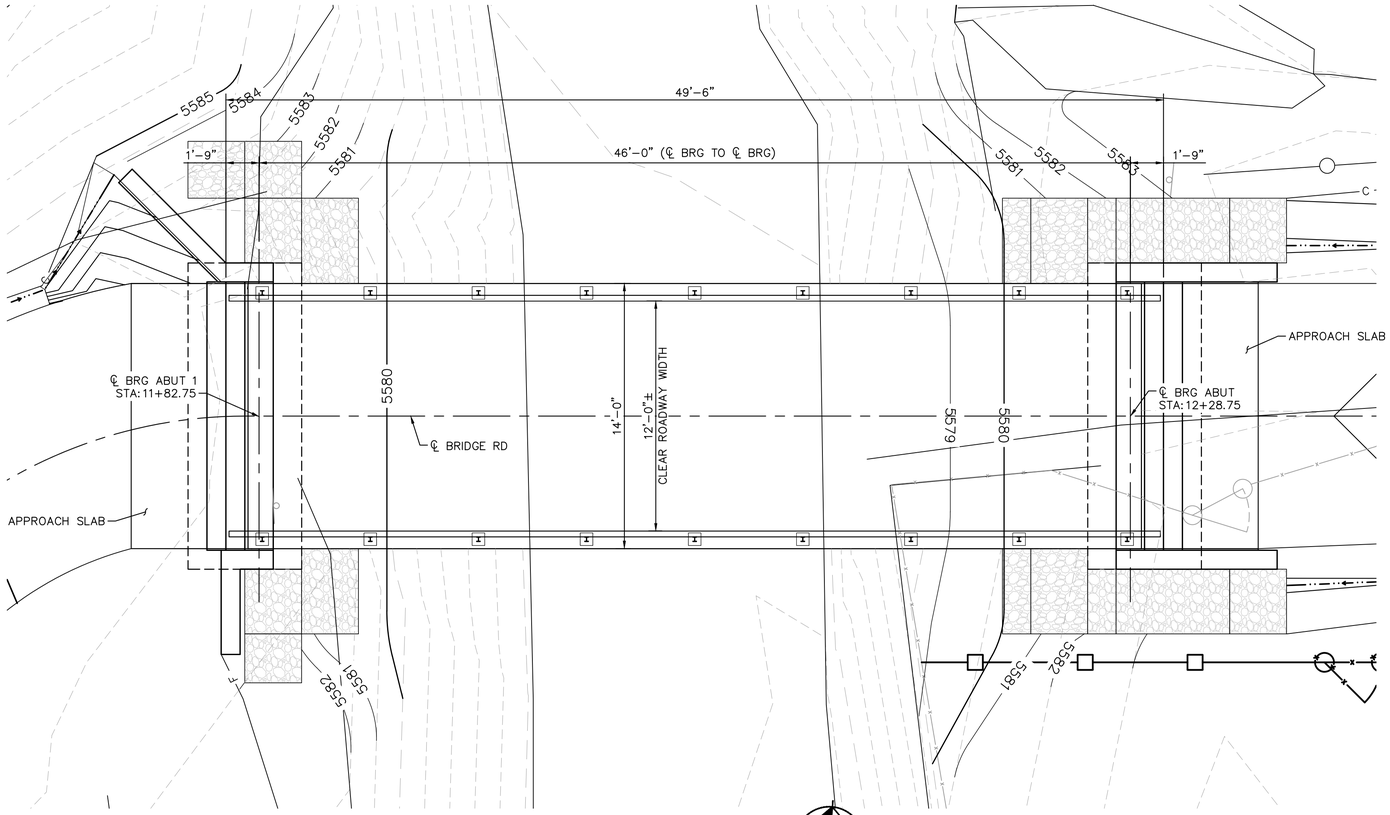

PLAN

SCALE: ¼" = 1'-0"

INDEX OF DRAWINGS

SHEET NO.	TITLE
12	GENERAL PLAN & ELEVATION
13	GENERAL NOTES & QUANTITIES
14	FOUNDATION PLAN
15	ABUTMENT 1 PLAN & ELEVATION
16	ABUTMENT 2 PLAN & ELEVATION
17	ABUTMENT DETAILS
18	WINGWALL DETAILS
19	GIRDER LAYOUT
20	GIRDER DETAILS
21	BEARING DETAILS
22	DECK PLAN
23	TYPICAL SECTION
24	RAILING DETAILS (1 OF 2)
25	RAILING DETAILS (2 OF 2)
26	GABION BASKET DETAILS
27	GABION BASKET LAYOUT
28	FOUNDATION DATA

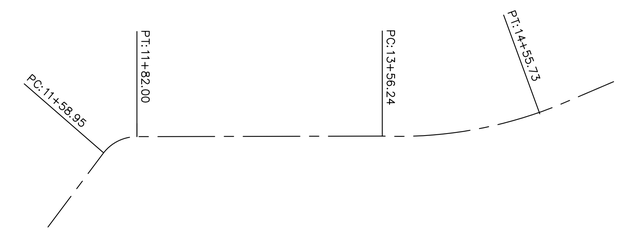

HORIZONTAL ALIGNMENT

NOT TO SCALE

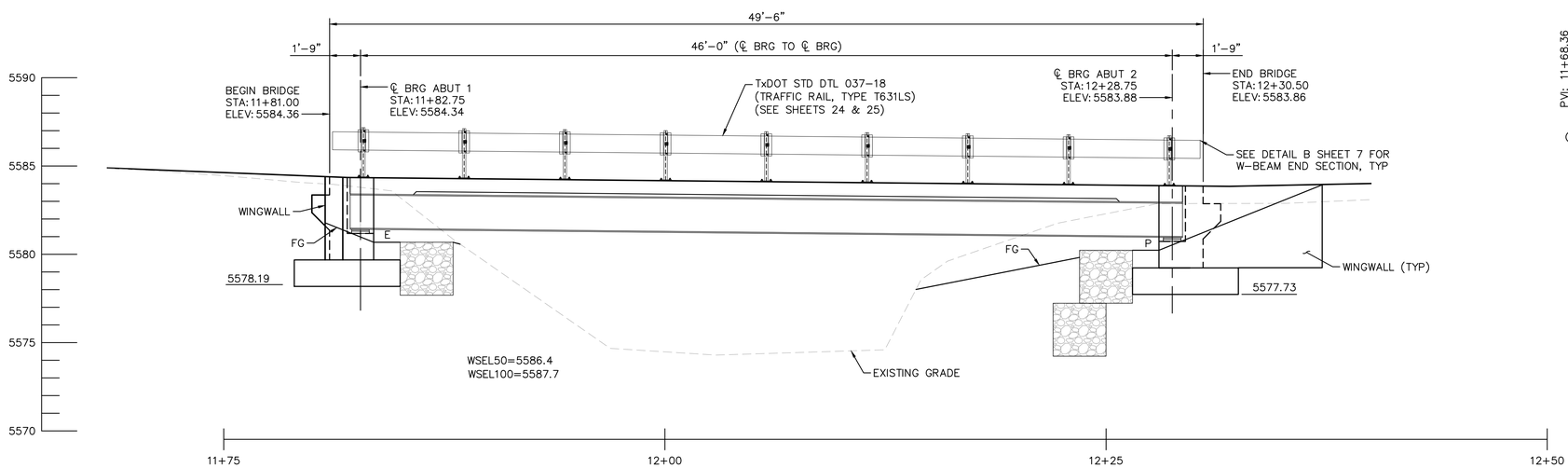

ELEVATION

SCALE: ¼" = 1'-0"

NOTE:

ELEVATIONS SHOWN ARE ALONG ℄ RIM TRAIL.

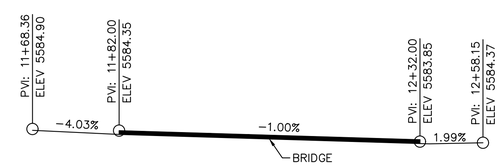

BRIDGE PROFILE

NOT TO SCALE

CALL TWO WORKING DAYS BEFORE YOU DIG
602-263-1100
1-800-STAKE-IT
(OUTSIDE MARICOPA COUNTY)

Registered Professional Engineer (Civil)
CERTIFICATE NO. 37422
DAVID J. LEISTIKO
Date Signed 05/08/20
ARIZONA, U.S.A.

Kimley»Horn

© 2020 KIMLEY-HORN & ASSOCIATES, INC.
7740 N. 16TH STREET, SUITE 300, PHOENIX, AZ 85020
PHONE: 602-944-5500 | WWW.KIMLEY-HORN.COM

GILA COUNTY
745 ROSE MOFFORD WAY
GLOBE, AZ 85501

DESIGN: CHG	DRAWN: CHG	CHK: DJL	DATE: 05/08/2020
REV	DESCRIPTION	BY	DATE:

GENERAL PLAN & ELEVATION

GILA COUNTY
RIM TRAIL BRIDGE REPLACEMENT

PROJECT NO. ADSPO17-00006796

DATE: 05/20

SHEET NO.
12 of 28

K:\PHX_Roadway\291233000-Rim Trail Bridge\Cadd\12-Sheets\Structures\291233000_GPE.dwg 5/9/2020 10:24 AM GOLEK, CHARLIE

GENERAL NOTES:

CONSTRUCTION SPECIFICATION –
ARIZONA DEPARTMENT OF TRANSPORTATION STANDARD SPECIFICATIONS FOR ROAD AND BRIDGE CONSTRUCTION, EDITION OF 2008 AND THE SPECIAL PROVISIONS.

DESIGN SPECIFICATIONS –
AASHTO LRFD BRIDGE DESIGN SPECIFICATIONS, 7TH EDITION, 2014 AND INTERIMS.

LOADING CLASS – HL–93 AND 90 PSF (NON–REDUCED)

ALL CONCRETE SHALL BE CLASS 'S' UNLESS NOTED OTHERWISE.

REINFORCING STEEL SHALL CONFORM TO ASTM SPECIFICATION A615. ALL REINFORCING SHALL BE FURNISHED AS GRADE 60.

ALL BENDS AND HOOKS SHALL MEET THE REQUIREMENTS OF AASHTO ARTICLE 5.10.2 ALL BEND DIMENSIONS FOR REINFORCING STEEL SHALL BE OUT–TO–OUT OF BARS. ALL PLACEMENT DIMENSIONS FOR REINFORCING STEEL SHALL BE TO CENTER OF BARS UNLESS NOTED OTHERWISE.

BRIDGE RAIL (TxDOT TYPE T631LS) . . . . . 100 LF
ALL REINFORCING STEEL SHALL HAVE 2 INCH CLEAR COVER UNLESS NOTED OTHERWISE.

ALL WELDING SHALL CONFORM TO THE REQUIREMENTS OF THE AASHTO/AWS D1.5M/D1.5 BRIDGE WELDING CODE.

STRENGTHS:
- CONCRETE DECK. . . . . $f'c$ = 4.5 ksi
- ALL OTHER CLASS "S" CONCRETE . . . . . $f'c$ = 4.0 ksi
- GRADE 60 REINFORCING . . . . . $f'c$ = 60.0 ksi
- STRUCTURAL STEEL
  - WIDE FLANGE BEAMS (ASTM A709 GRADE 50W) . . . . . f_y = 50.0 ksi
  - ANGLES & CHANNELS (ASTM A588 GRADE 50) . . . . . f_y = 50.0 ksi
  - SHEAR STUDS (ASTM A108) . . . . . f_y = 50.0 ksi
  - ANCHOR BOLTS (F1554 GRADE 105) . . . . . f_y = 105.0 ksi
  - STRUCTURAL SHAPES (ASTM 588 GRADE 50). . . . . f_y = 50.0 ksi

TRAFFIC RAIL (TYPE T631LS) SHALL UTILIZE WEATHERING STEEL FOR ALL COMPONENTS.

BOLTS FOR USE WITH WEATHERING STEEL SHALL BE ASTM A325 TYPE 3 WITH A563 GRADE DH3 NUTS AND F436 TYPE 3 WASHERS.

DIMENSIONS SHALL NOT BE SCALED FROM DRAWINGS.

LEGEND

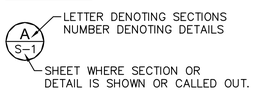

APPROXIMATE QUANTITIES							
	STRUCTURAL EXCAVATION	STRUCTURAL BACKFILL	CLASS 'S' CONCRETE		REINFORCING STEEL	STRUCTURAL STEEL	GABIONS
			F'C = 4000 PSI	F'C = 4500 PSI			
	CY	CY	CY	CY	LBS	LBS	CY
ABUTMENT 1	45	15	15		2342		17
ABUTMENT 2	45	15	15		2342		34
SUPERSTRUCTURE				20	3898	17140	
TOTAL	90	30	30	20	8582		51
AS–BUILT							

BRIDGE RAIL (TxDOT TYPE T631LS) . . . . . 100 LF
APPROACH SLAB (SPECIAL DETAIL) . . . . . 140 SF

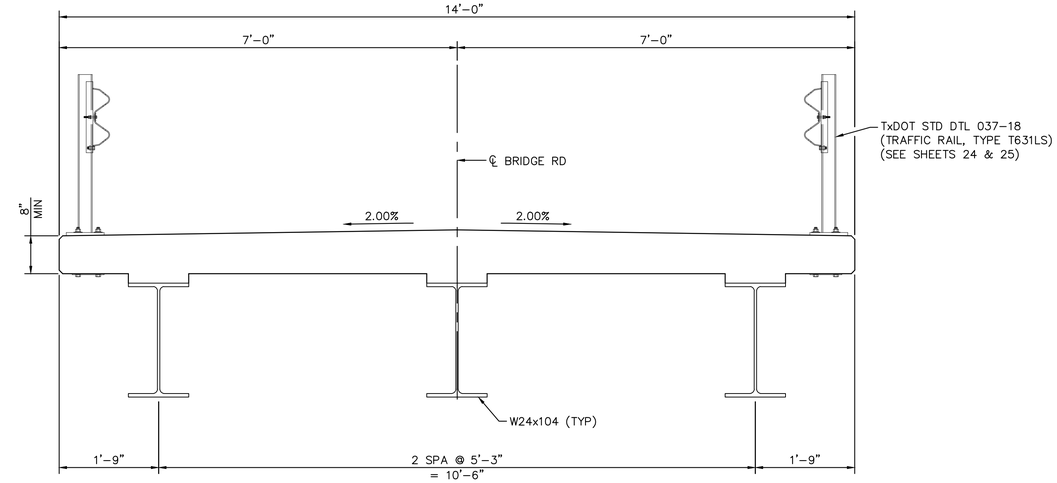

TYPICAL SECTION

SCALE: ¾" = 1'–0"

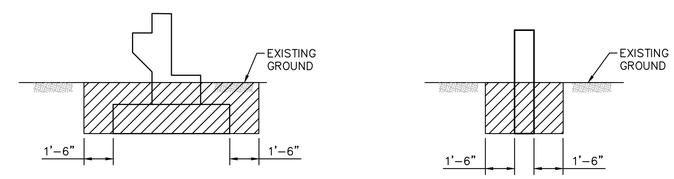

ABUTMENT SECTION WINGWALL SECTION

STRUCTURE EXCAVATION

ABUTMENT SECTION WINGWALL SECTION

STRUCTURE BACKFILL

LEGEND

- STRUCTURAL EXCAVATION
- STRUCTURAL BACKFILL

CALL TWO WORKING DAYS BEFORE YOU DIG
602-263-1100
1-800-STAKE-IT
(OUTSIDE MARICOPA COUNTY)

Kimley»Horn

© 2020 KIMLEY–HORN & ASSOCIATES, INC.
7740 N. 16TH STREET, SUITE 300, PHOENIX, AZ 85020
PHONE: 602–944–5500 | WWW.KIMLEY–HORN.COM

GILA COUNTY
745 ROSE MOFFORD WAY
GLOBE, AZ 85501

REV	DESCRIPTION	BY	DATE:

DESIGN: CHG | DRAWN: CHG | CHK: DJL | DATE: 05/08/2020

GENERAL NOTES & QUANTITIES

GILA COUNTY
RIM TRAIL BRIDGE REPLACEMENT

PROJECT NO. ADSPO17-00006796
DATE: 05/20

Registered Professional Engineer (Civil) CERTIFICATE NO. 37422 DAVID J. LEISTIKO Date Signed 05/08/20 ARIZONA, U.S.A.

SHEET NO.
13 of 28

K:\PHX_Roadway\291233000–Rim Trail Bridge\Cadd\12–Sheets\Structures\291233000_GPE.dwg 5/8/2020 3:43 PM FLOOD, MARK

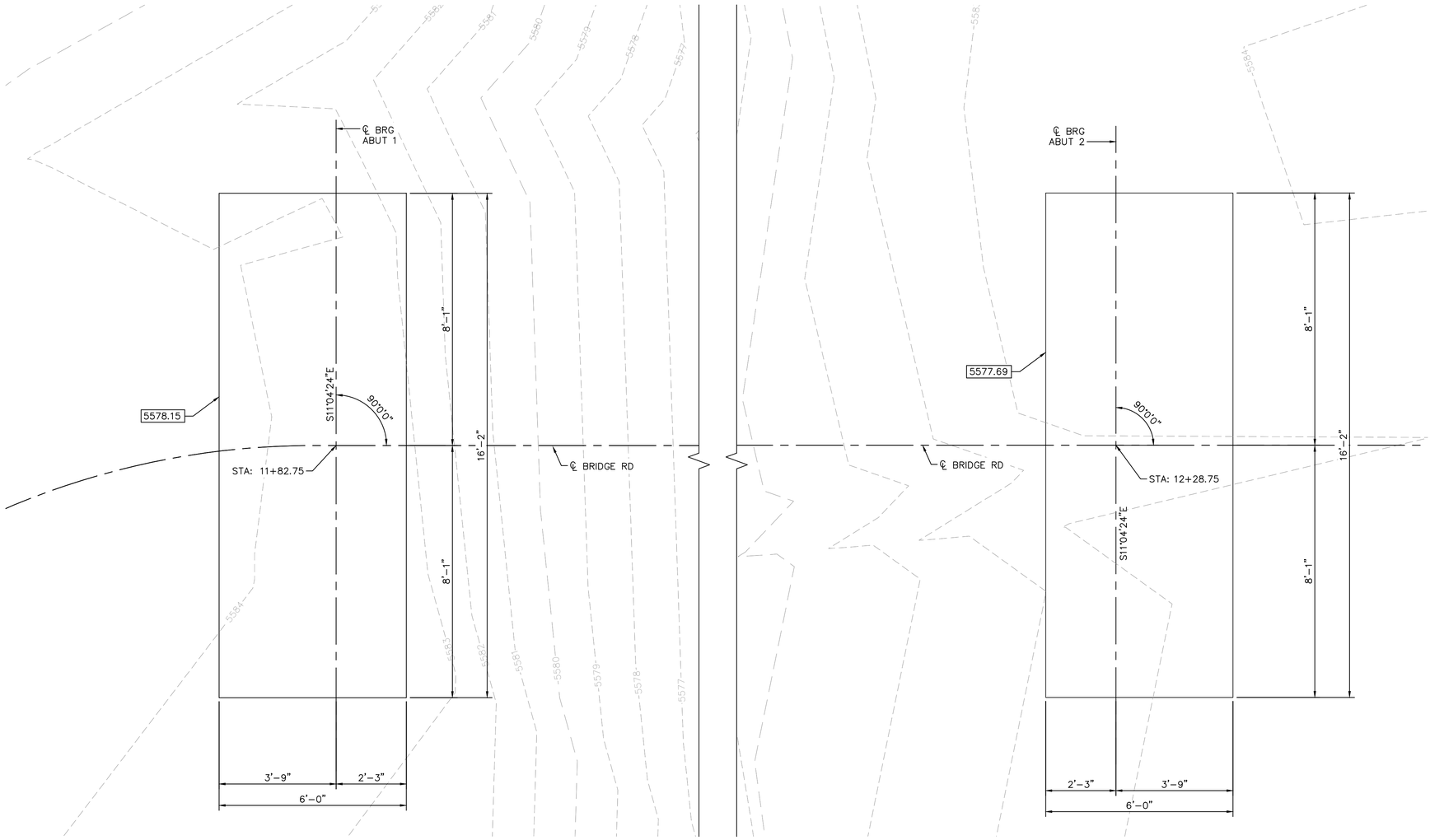

FOUNDATION PLAN

SCALE: ½" = 1-0"'

NORTH

NOTES:

1. XXXX.XX DENOTES BOTTOM OF FOOTING ELEVATION

THE GREAT SEAL OF GILA COUNTY ARIZONA
DITAT DEUS
1881

CALL TWO WORKING DAYS BEFORE YOU DIG
602-263-1100
1-800-STAKE-IT
(OUTSIDE MARICOPA COUNTY)

Kimley»Horn

© 2020 KIMLEY-HORN & ASSOCIATES, INC.
7740 N. 16TH STREET, SUITE 300, PHOENIX, AZ 85020
PHONE: 602-944-5500 | WWW.KIMLEY-HORN.COM

GILA COUNTY
745 ROSE MOFFORD WAY
GLOBE, AZ 85501

DESIGN: CHG | DRAWN: CHG | CHK: DJL | DATE: 05/08/2020

REV	DESCRIPTION	BY	DATE:

FOUNDATION PLAN

GILA COUNTY
RIM TRAIL BRIDGE REPLACEMENT

PROJECT NO. ADSPO17-00006796

DATE: 05/20

Registered Professional Engineer (Civil)
CERTIFICATE NO. 37422
DAVID J. LEISTIKO
Date Signed 05/08/20
ARIZONA, U.S.A.

SHEET NO.
14 of 28

K:\PHX_Roadway\291233000-Rim Trail Bridge\Cadd\12-Sheets\Structures\291233000_FND.dwg 5/8/2020 3:45 PM FLOOD, MARK

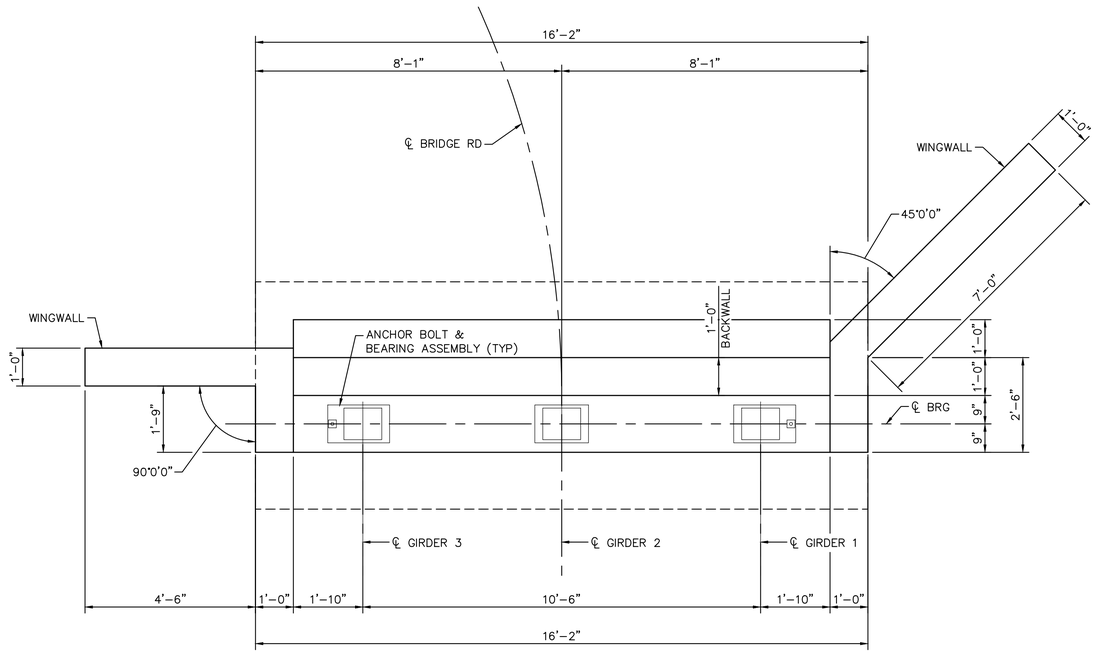

ABUTMENT 1 PLAN

SCALE: ½" = 1-0"'
(LOOKING BACK STATION)

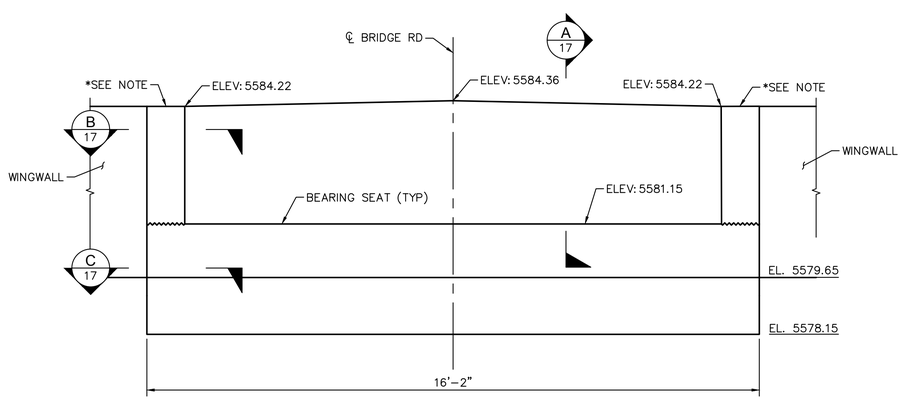

* SEE WINGWALL SHEETS FOR ELEVATIONS

ABUTMENT 1 ELEVATION

SCALE: ½" = 1-0"'

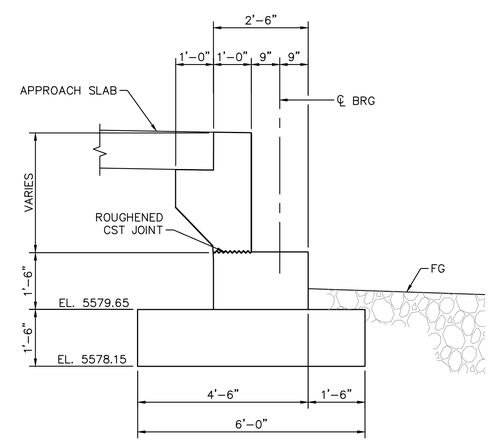

ABUTMENT 1 TYPICAL SECTION

SCALE: ½" = 1-0"'

GILA COUNTY
745 ROSE MOFFORD WAY
GLOBE, AZ 85501

REV	DESCRIPTION	BY	DATE:

DESIGN: CHG | DRAWN: CHG | CHK: DJL | DATE: 05/08/2020

ABUTMENT 1 PLAN & ELEVATION

GILA COUNTY
RIM TRAIL BRIDGE REPLACEMENT

PROJECT NO. ADSPO17-00006796
DATE: 05/20

CALL TWO WORKING DAYS BEFORE YOU DIG
602-263-1100
1-800-STAKE-IT
(OUTSIDE MARICOPA COUNTY)

Registered Professional Engineer (Civil)
CERTIFICATE NO. 37422
DAVID J. LEISTIKO
Date Signed 05/08/20
ARIZONA, U.S.A.

Kimley»Horn

© 2020 KIMLEY-HORN & ASSOCIATES, INC.
7740 N. 16TH STREET, SUITE 300, PHOENIX, AZ 85020
PHONE: 602-944-5500 | WWW.KIMLEY-HORN.COM

SHEET NO.

K:\PHX_Roadway\291233000-Rim Trail Bridge\Cadd\12-Sheets\Structures\291233000_FND.dwg 5/8/2020 3:46 PM FLOOD, MARK

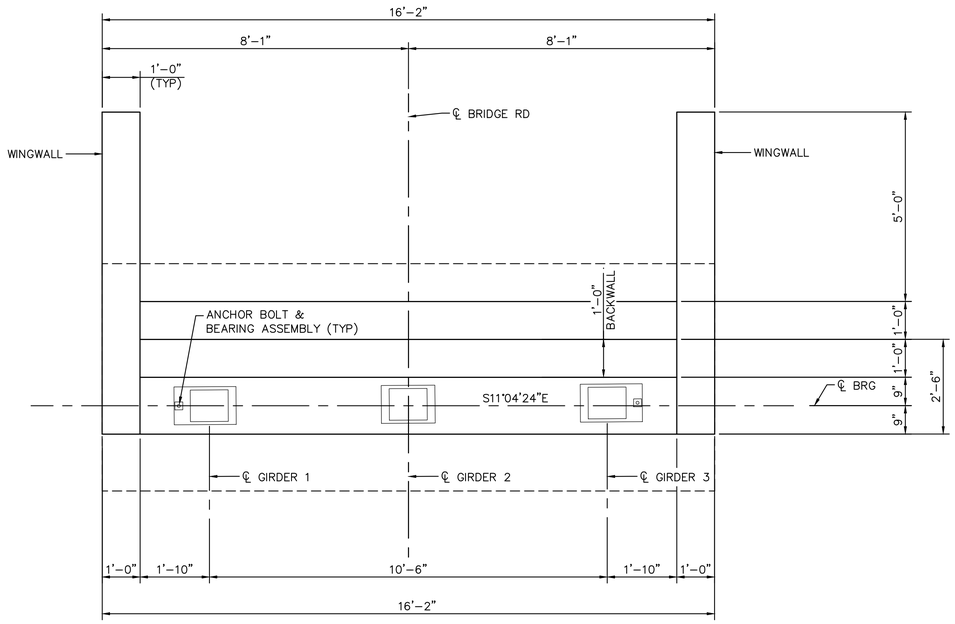

ABUTMENT 2 PLAN

SCALE: ½" = 1-0"'

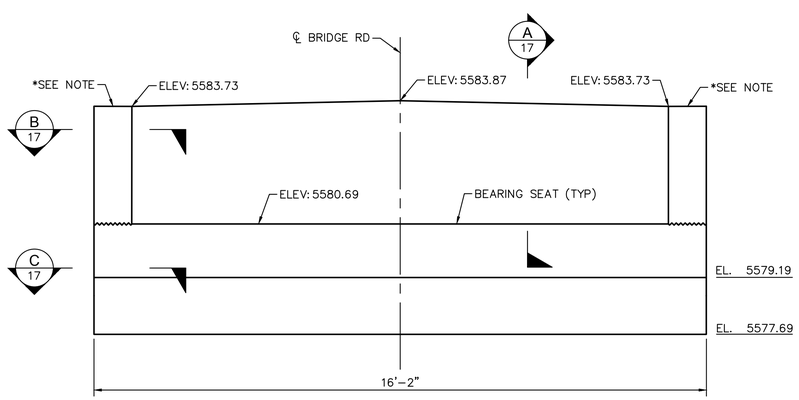

ABUTMENT 2 ELEVATION

SCALE: ½" = 1-0"'

* SEE WINGWALL SHEETS FOR ELEVATIONS

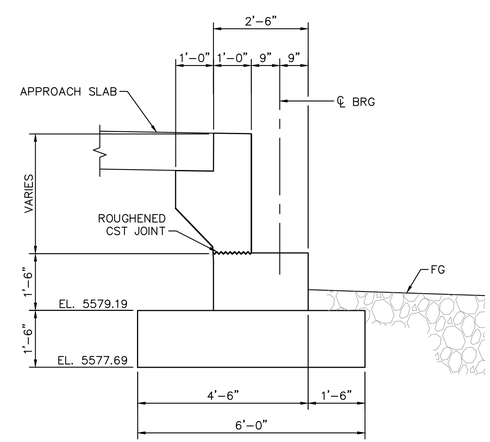

ABUTMENT 2 TYPICAL SECTION

SCALE: ½" = 1-0"'

GILA COUNTY
745 ROSE MOFFORD WAY
GLOBE, AZ 85501

DESIGN: CHG	DRAWN: CHG	CHK: DJL	DATE: 05/08/2020
REV	DESCRIPTION	BY	DATE:

ABUTMENT 2 PLAN & ELEVATION

GILA COUNTY
RIM TRAIL BRIDGE REPLACEMENT

PROJECT NO. ADSPO17-00006796

DATE: 05/20

THE GREAT SEAL OF GILA COUNTY ARIZONA
DITAT DEUS
1881

CALL TWO WORKING DAYS BEFORE YOU DIG
602-263-1100
1-800-STAKE-IT
(OUTSIDE MARICOPA COUNTY)

Registered Professional Engineer (Civil)
CERTIFICATE NO.
37422
DAVID J. LEISTIKO
Date Signed 05/08/20
ARIZONA, U.S.A.

Kimley»Horn

© 2020 KIMLEY-HORN & ASSOCIATES, INC.
7740 N. 16TH STREET, SUITE 300, PHOENIX, AZ 85020
PHONE: 602-944-5500 | WWW.KIMLEY-HORN.COM

SHEET NO.

K:\PHX_Roadway\291233000-Rim Trail Bridge\Cadd\12-Sheets\Structures\291233000_FND.dwg 5/8/2020 3:46 PM FLOOD, MARK

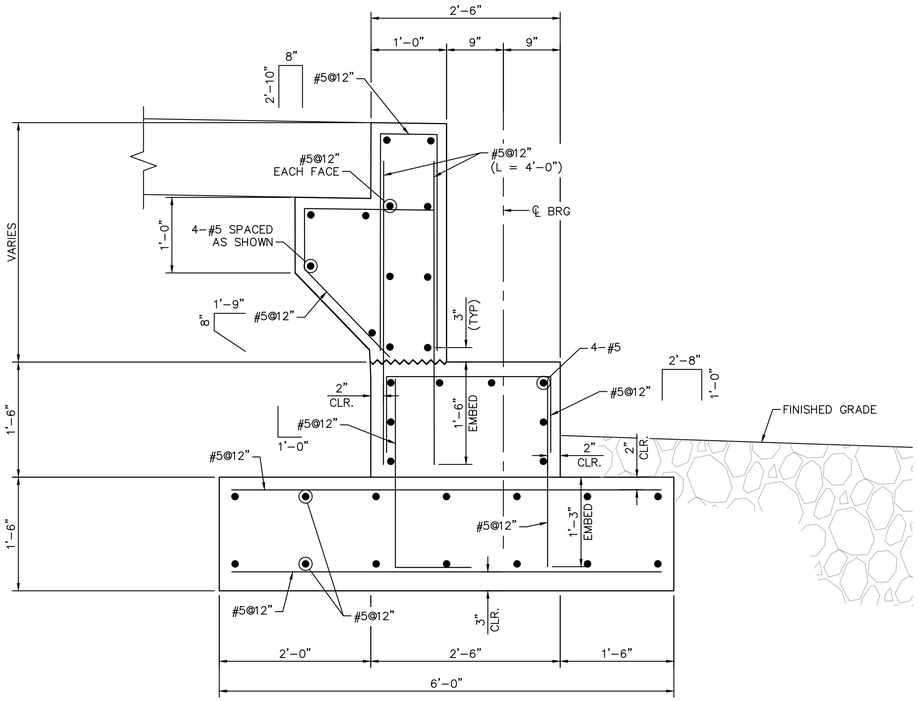

SECTION A 15 A 16
SCALE: 1" = 1'-0"

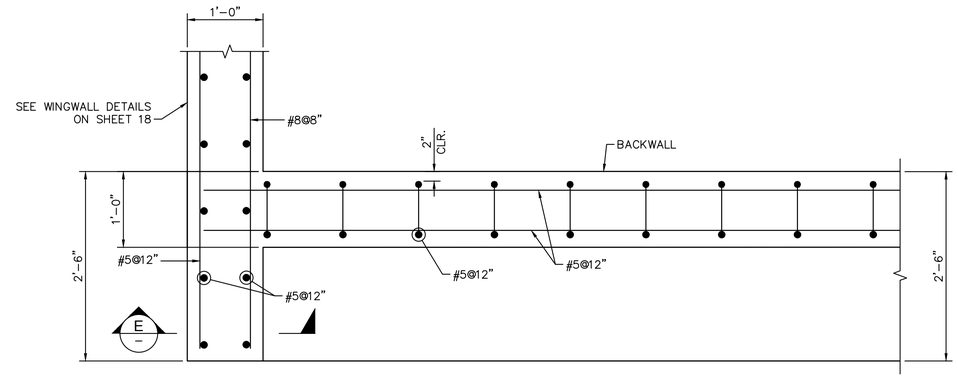

SECTION B 15 B 16
SCALE: 1" = 1'-0"

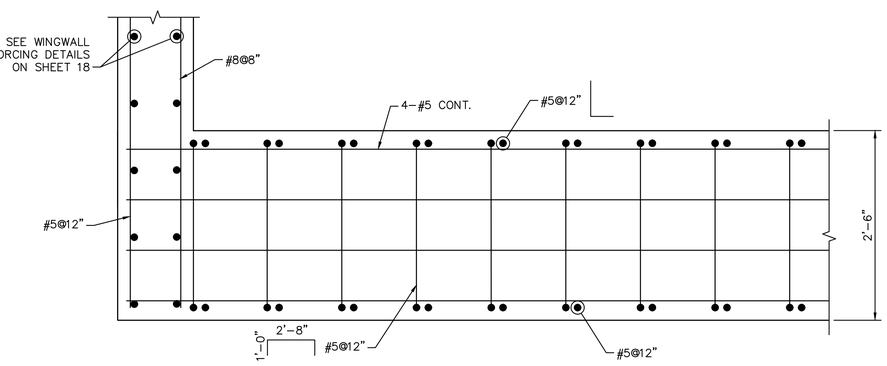

SECTION C 15 C 16
SCALE: 1" = 1'-0"

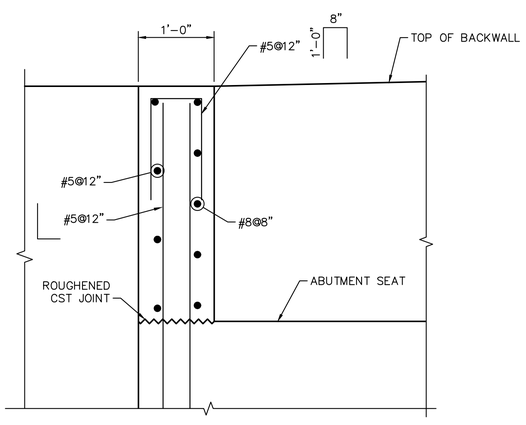

SECTION E -
SCALE: 1" = 1'-0"

GILA COUNTY
745 ROSE MOFFORD WAY
GLOBE, AZ 85501

DESIGN: CHG	DRAWN: CHG	CHK: DJL	DATE: 05/08/2020
REV	DESCRIPTION	BY	DATE:

ABUTMENT DETAILS

GILA COUNTY
RIM TRAIL BRIDGE REPLACEMENT

PROJECT NO. ADSPO17-00006796
DATE: 05/20

CALL TWO WORKING DAYS BEFORE YOU DIG
602-263-1100
1-800-STAKE-IT
(OUTSIDE MARICOPA COUNTY)

Registered Professional Engineer (Civil)
Certificate No.
37422
DAVID J. LEISTIKO
Date Signed 05/08/20
ARIZONA, U.S.A.

Kimley»Horn

© 2020 KIMLEY-HORN & ASSOCIATES, INC.

7740 N. 16TH STREET, SUITE 300, PHOENIX, AZ 85020
PHONE: 602-944-5500 | WWW.KIMLEY-HORN.COM

SHEET NO.

K:\PHX_Roadway\291233000-Rim Trail Bridge\Cadd\12-Sheets\Structures\291233000_FND.dwg 5/8/2020 3:47 PM FLOOD, MARK

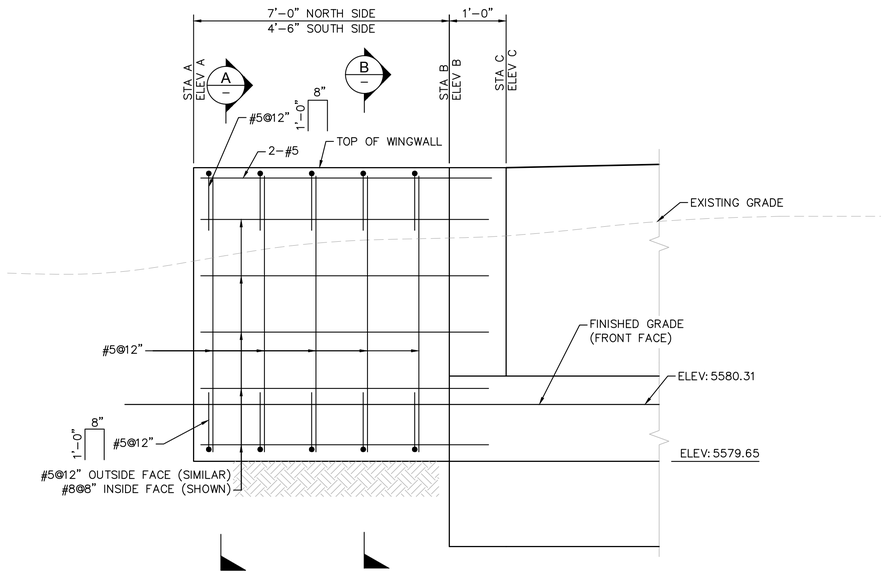

ABUTMENT 1 SOUTH SIDE WINGWALL DEVELOPED ELEVATION

SCALE: ¾" = 1'-0"
(ABUTMENT 1 NORTH SIDE SIMILAR)

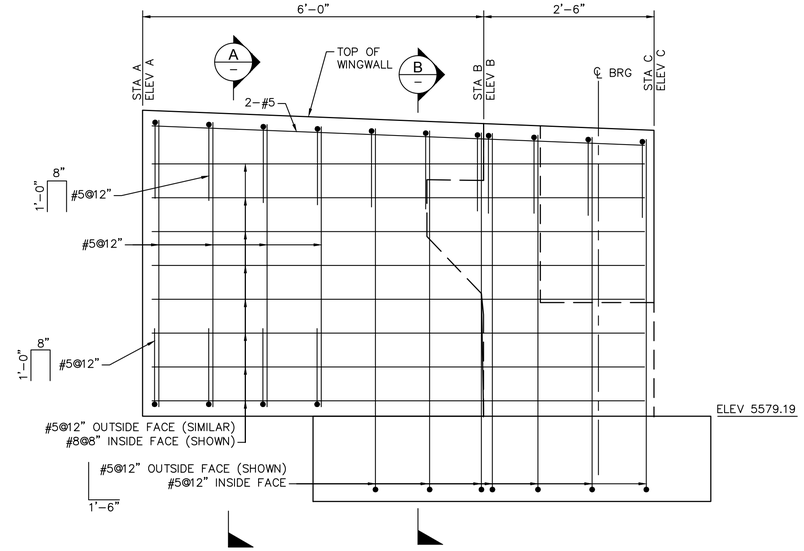

ABUTMENT 2 NORTH SIDE WINGWALL ELEVATION

SCALE: ¾" = 1'-0"
(ABUTMENT 2 SOUTH SIDE SIMILAR)

WINGWALL LAYOUT DETAILS				
	ABUTMENT 1		ABUTMENT 2	
	NORTH	SOUTH	NORTH	SOUTH
STA A	11+75.91	11+81.50	12+36.50	12+36.50
ELEV A	5584.22	5584.22	5583.78	5583.78
OFFSET A	12.14'LT	12.52'RT	8.08'LT	8.08'RT
STA B	11+81.38	11+81.63	12+30.50	12+30.50
ELEV B	5584.22	5584.22	5583.72	5583.72
OFFSET B	8.09'LT	8.08'RT	8.08'LT	8.08'RT
STA C	11+83.50	11+83.50	12+28.00	12+28.00
ELEV C	5584.22	5584.22	5583.72	5583.72
OFFSET C	8.09'LT	8.08'RT	8.08'LT	8.08'RT

NOTE: OFFSETS GIVEN FROM ℄ ROAD PATH TO FRONT FACE OF WINGWALL

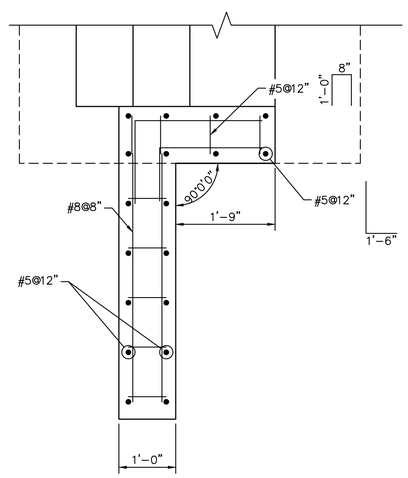

ABUTMENT 1 SOUTH SIDE PLAN

SCALE: ¾" = 1'-0"
(ABUTMENT 1 NORTH SIDE SIMILAR)

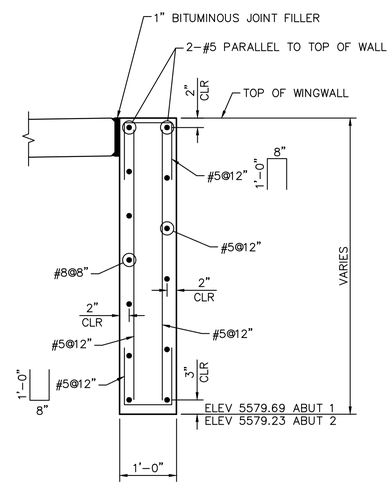

SECTION A

SCALE: ¾" = 1'-0"

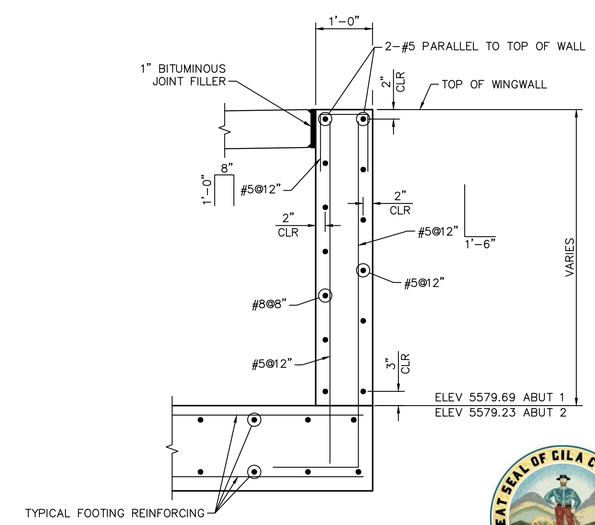

SECTION B

SCALE: ¾" = 1'-0"

CALL TWO WORKING DAYS BEFORE YOU DIG
602-263-1100
1-800-STAKE-IT
(OUTSIDE MARICOPA COUNTY)

Kimley»Horn

© 2020 KIMLEY-HORN & ASSOCIATES, INC.
7740 N. 16TH STREET, SUITE 300, PHOENIX, AZ 85020
PHONE: 602-944-5500 | WWW.KIMLEY-HORN.COM

GILA COUNTY
745 ROSE MOFFORD WAY
GLOBE, AZ 85501

DESIGN: CHG	DRAWN: CHG	CHK: DJL	DATE: 05/08/2020
REV	DESCRIPTION	BY	DATE:

WINGWALL DETAILS

GILA COUNTY
RIM TRAIL BRIDGE REPLACEMENT

PROJECT NO. ADSPO17-00006796
DATE: 05/20

Registered Professional Engineer (Civil) CERTIFICATE NO. 37422 DAVID J. LEISTIKO Date Signed 05/08/20 ARIZONA, U.S.A.

SHEET NO.
18 of 28

K:\PHX_Roadway\291233000-Rim Trail Bridge\Cadd\12-Sheets\Structures\291233000_WW.dwg 5/8/2020 3:49 PM FLOOD, MARK

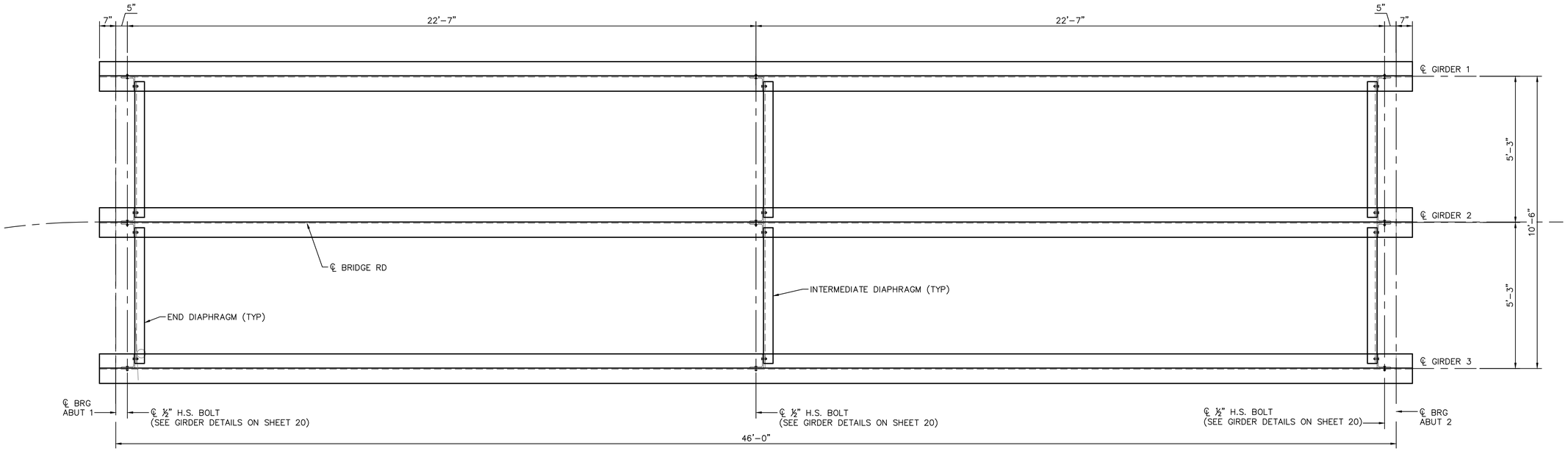

GIRDER LAYOUT

SCALE: ½" = 1'-0"

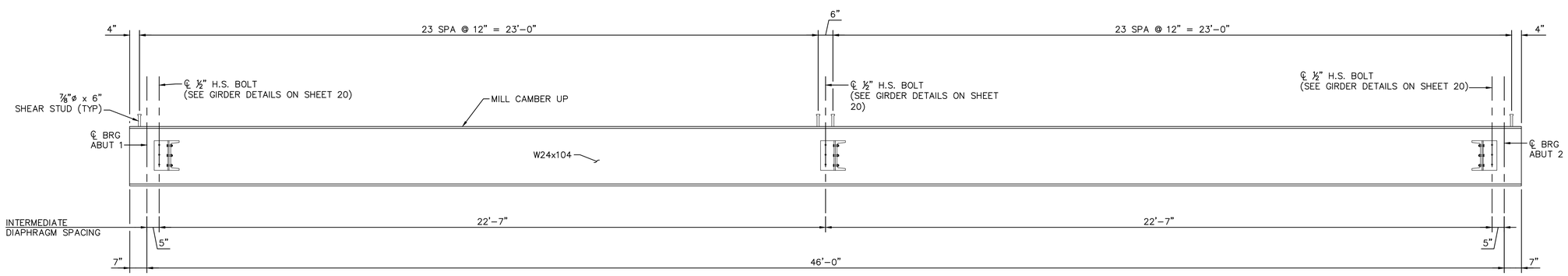

TYPICAL GIRDER ELEVATION

SCALE: ½" = 1'-0"

CAMBER TABLE (IN)											
	℄ BRG	0.1	0.2	0.3	0.4	0.5	0.6	0.7	0.8	0.9	℄ BRG
GIRDER 1 & 3	0.000	0.250	0.473	0.647	0.758	0.796	0.758	0.647	0.473	0.250	0.000
GIRDER 2	0.000	0.284	0.537	0.735	0.861	0.904	0.861	0.735	0.537	0.284	0.000

SCREED TABLE GIRDERS 1, 2, AND 3 (ELEVATIONS)											
	℄ BRG	0.1	0.2	0.3	0.4	0.5	0.6	0.7	0.8	0.9	℄ BRG
LEFT EDGE OF DECK	5584.20	5584.18	5584.15	5584.12	5584.08	5584.04	5583.99	5583.93	5583.87	5583.81	5583.74
GIRDER 1	5584.24	5584.23	5584.20	5584.16	5584.12	5584.07	5584.02	5583.95	5583.89	5583.82	5583.78
GIRDER 2	5584.34	5584.32	5584.30	5584.27	5584.23	5584.19	5584.14	5584.08	5584.02	5583.95	5583.88
GIRDER 3	5584.24	5584.21	5584.18	5584.15	5584.12	5584.07	5584.02	5583.97	5583.91	5583.84	5583.78
RIGHT EDGE OF DECK	5584.20	5584.18	5584.15	5584.12	5584.08	5584.04	5583.99	5583.93	5583.87	5583.81	5583.74

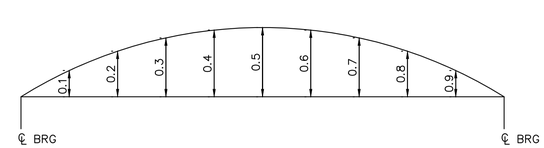

CAMBER DIAGRAM

NOT TO SCALE

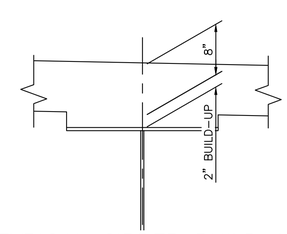

TYPICAL GIRDER BUILD-UP

SCALE: 1" = 1'-0"

CALL TWO WORKING DAYS BEFORE YOU DIG
602-263-1100
1-800-STAKE-IT
(OUTSIDE MARICOPA COUNTY)

Registered Professional Engineer (Civil) CERTIFICATE NO. 37422 DAVID J. LEISTIKO Date Signed 05/08/20 ARIZONA, U.S.A.

Kimley»Horn

© 2020 KIMLEY-HORN & ASSOCIATES, INC.
7740 N. 16TH STREET, SUITE 300, PHOENIX, AZ 85020
PHONE: 602-944-5500 | WWW.KIMLEY-HORN.COM

GILA COUNTY
745 ROSE MOFFORD WAY
GLOBE, AZ 85501

REV	DESCRIPTION	BY	DATE:

DESIGN: CHG | DRAWN: CHG | CHK: DJL | DATE: 05/08/2020

GIRDER LAYOUT

GILA COUNTY
RIM TRAIL BRIDGE REPLACEMENT

PROJECT NO. ADSPO17-00006796
DATE: 05/20

SHEET NO.
19 of 28

K:\PHX_Roadway\291233000-Rim Trail Bridge\Cadd\12-Sheets\Structures\291233000_SUP.dwg 5/8/2020 3:51 PM FLOOD, MARK

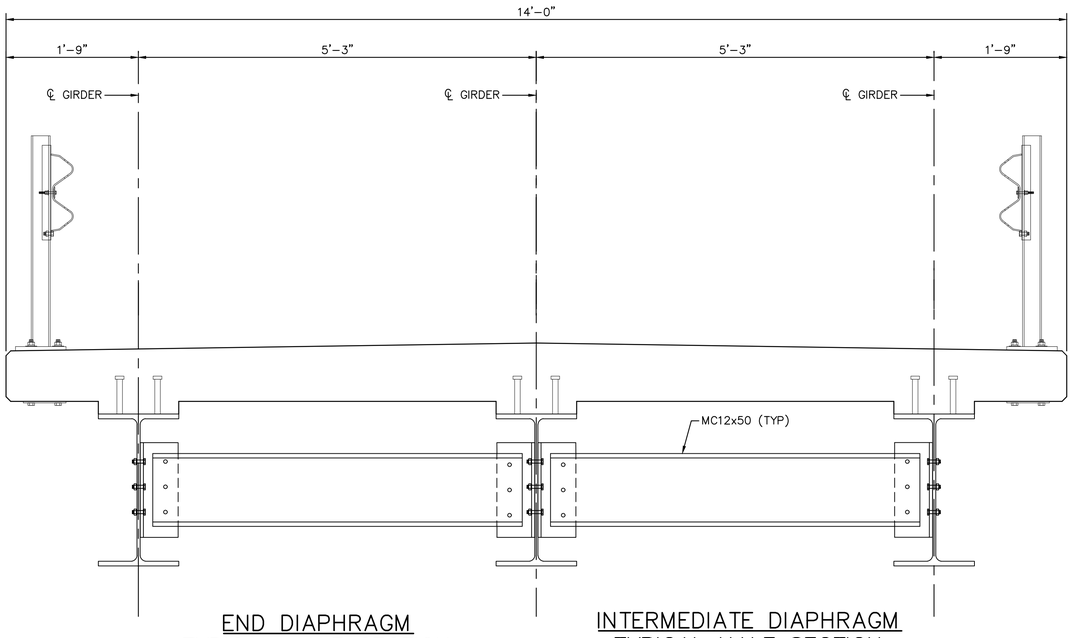

END DIAPHRAGM
TYPICAL HALF SECTION
SCALE: 1" = 1'-0"
(SHOWING ABUTMENT DIAPHRAGMS)

INTERMEDIATE DIAPHRAGM
TYPICAL HALF SECTION
SCALE: 1" = 1'-0"
(SHOWING INTERMEDIATE DIAPHRAGMS)

NOTES:

1. ALL BOLTED FIELD CONNECTIONS SHALL BE ½" DIA HIGH STRENGTH BOLTS AND NUTS WITH HARDENED WASHERS. ALL DETAILS SHALL CONFORM TO AASHTO SPECIFICATION M134 FOR HIGH STRENGTH BOLTS. INSTALLATION OF BOLTS SHALL CONFORM TO AASHTO AS REQUIRED BY SECTION 604-2.04 OF THE STANDARD SPECIFICATIONS. USE 9/16" DIA HOLES.
2. TIGHT FIT STIFFENERS SHALL CONSIST OF AT LEAST ONE POINT BEARING OF THE STIFFENER PLATE AGAINST THE GIRDER FLANGE, WITH LOCAL CLEARANCE NOT TO EXCEED 1/16".

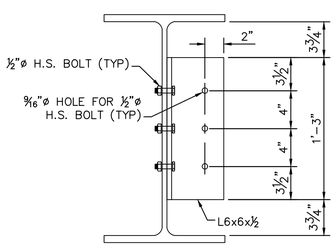

DIAPHRAGM CONNECTION
(EXTERIOR GIRDER)
SCALE: 1½" = 1'-0"

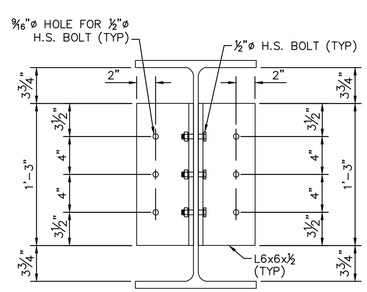

DIAPHRAGM CONNECTION
(INTERIOR GIRDER)
SCALE: 1½" = 1'-0"

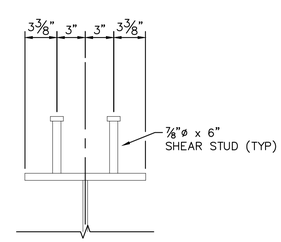

SHEAR STUD DETAIL
SCALE: 1½" = 1'-0"

GILA COUNTY
745 ROSE MOFFORD WAY
GLOBE, AZ 85501

REV	DESCRIPTION	BY	DATE:

DESIGN: CHG | DRAWN: CHG | CHK: DJL | DATE: 05/08/2020

GIRDER DETAILS

GILA COUNTY
RIM TRAIL BRIDGE REPLACEMENT

PROJECT NO. ADSPO17-00006796
DATE: 05/20

CALL TWO WORKING DAYS BEFORE YOU DIG
602-263-1100
1-800-STAKE-IT
(OUTSIDE MARICOPA COUNTY)

Registered Professional Engineer (Civil)
CERTIFICATE NO.
37422
DAVID J. LEISTIKO
Date Signed 05/08/20
ARIZONA, U.S.A.

SHEET NO.
20 of 28

Kimley»Horn
© 2020 KIMLEY-HORN & ASSOCIATES, INC.

7740 N. 16TH STREET, SUITE 300, PHOENIX, AZ 85020
PHONE: 602-944-5500 | WWW.KIMLEY-HORN.COM

K:\PHX_Roadway\291233000-Rim Trail Bridge\Cadd\12-Sheets\Structures\291233000_SUP.dwg 5/8/2020 3:51 PM FLOOD, MARK

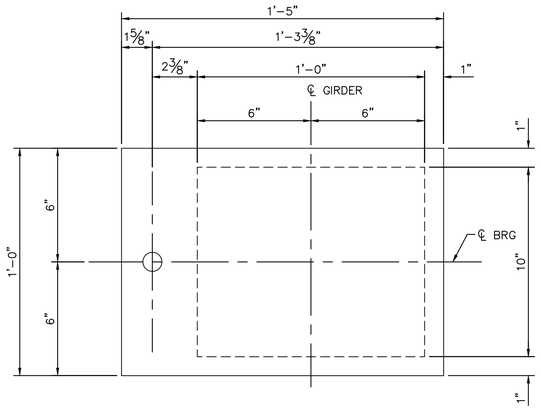

SOLE PLATE DETAILS (EXTERIOR GIRDERS – ABUTMENT 1)

SCALE: 3" = 1'-0"

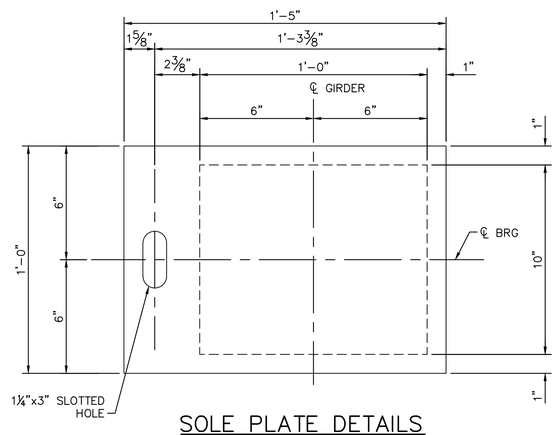

SOLE PLATE DETAILS (EXTERIOR GIRDERS – ABUTMENT 2)

SCALE: 3" = 1'-0"

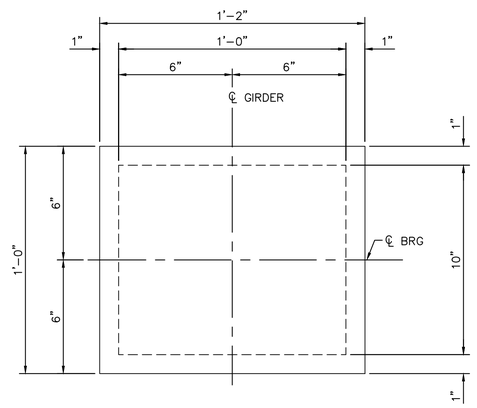

SOLE PLATE DETAILS (INTERIOR GIRDERS)

SCALE: 3" = 1'-0"

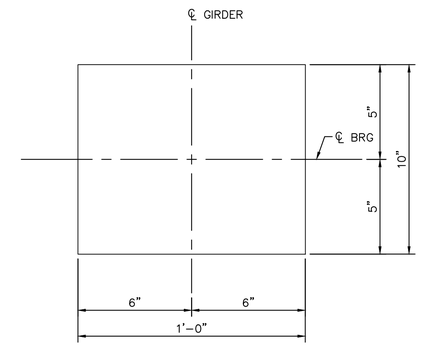

BEARING PAD PLAN

SCALE: 3" = 1'-0"

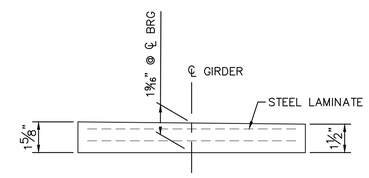

TAPERED BEARING PAD SECTION

SCALE: 3" = 1'-0"

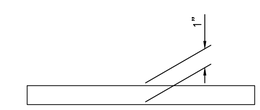

SOLE PLATE

SCALE: 3" = 1'-0"

NOTES:

1. BEARING PAD DESIGN PARAMETERS
   - DESIGN LOAD (DL + LL) . . . . . 74.2 KIPS
   - DESIGN METHOD . . . . . A
   - LOW TEMPERATURE ZONE . . . . . A
   - ELASTOMETER GRADE 0
   - HARDNESS . . . . . 55 (SHORE A)
   - SHEAR MODULUS . . . . . 130 PSI (@ 72°F)
2. ELASTOMERIC BEARING PAD SHALL BE STEEL LAMINATED NEOPRENE PADS. STEEL LAMINATES SHALL BE ROLLED MILD STEEL PER ASTM A36, ASTM A1011 OR ASTM A1008, GRADE 40.
3. BEARING PADS SHALL CONFORM TO THE ADOT STANDARD SPECIFICATIONS FOR ROAD AND BRIDGE CONSTRUCTION.

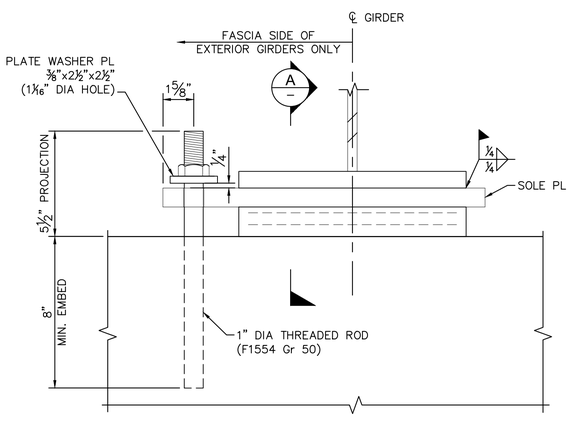

BEARING DETAILS (EXTERIOR GIRDERS)

SCALE: 3" = 1'-0"

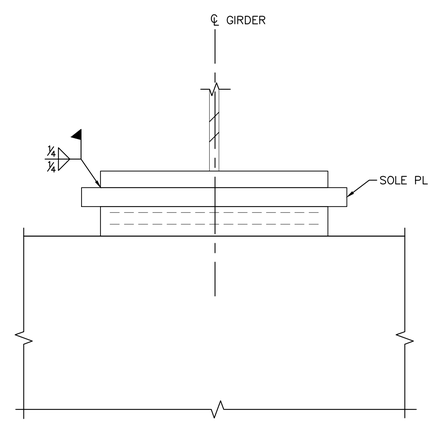

BEARING DETAILS (INTERIOR GIRDERS)

SCALE: 3" = 1'-0"

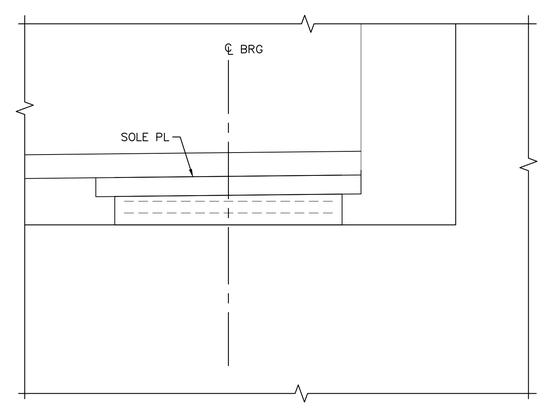

SECTION A

SCALE: 3" = 1'-0"

GILA COUNTY
745 ROSE MOFFORD WAY
GLOBE, AZ 85501

REV	DESCRIPTION	BY	DATE:

DESIGN: CHG | DRAWN: CHG | CHK: DJL | DATE: 05/08/2020

BEARING DETAILS

GILA COUNTY
RIM TRAIL BRIDGE REPLACEMENT

PROJECT NO. ADSPO17-00006796

DATE: 05/20

Registered Professional Engineer (Civil) Certificate No. 37422 DAVID J. LEISTIKO Date Signed 05/08/20 ARIZONA, U.S.A.

SHEET NO.

21 of 28

CALL TWO WORKING DAYS BEFORE YOU DIG
602-263-1100
1-800-STAKE-IT
(OUTSIDE MARICOPA COUNTY)

Kimley»Horn

© 2020 KIMLEY-HORN & ASSOCIATES, INC.

7740 N. 16TH STREET, SUITE 300, PHOENIX, AZ 85020
PHONE: 602-944-5500 | WWW.KIMLEY-HORN.COM

K:\PHX_Roadway\291233000-Rim Trail Bridge\Cadd\12-Sheets\Structures\291233000_SUP.dwg 5/8/2020 3:52 PM FLOOD, MARK

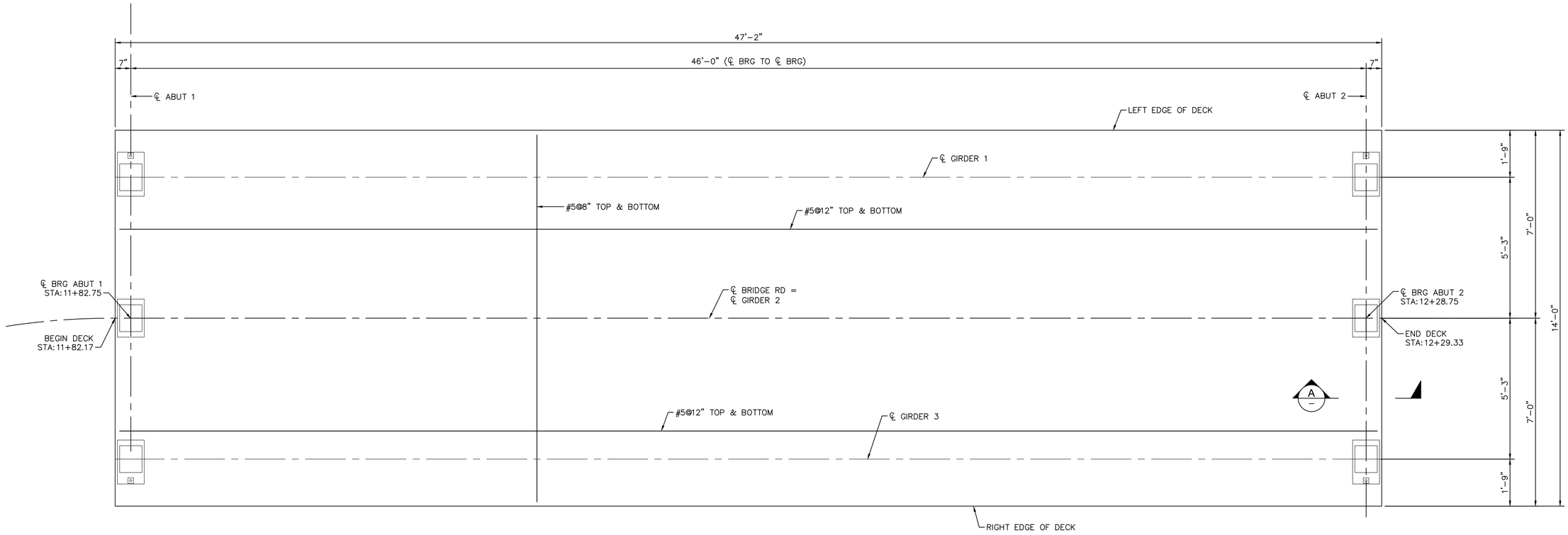

DECK PLAN

SCALE: ½" = 1'-0"

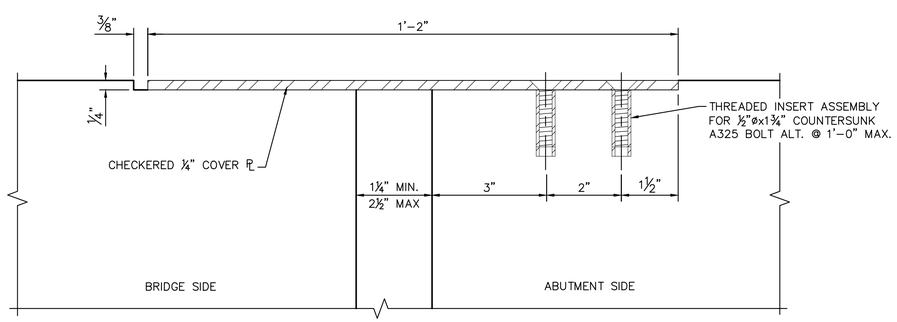

SECTION A

SCALE: 6" = 1'-0"

GILA COUNTY
745 ROSE MOFFORD WAY
GLOBE, AZ 85501

DESIGN: EHG	DRAWN: EHG	CHK: DWL	DATE: 05/08/2020
REV	DESCRIPTION	BY	DATE:

DECK PLAN

GILA COUNTY
RIM TRAIL BRIDGE REPLACEMENT

PROJECT NO. ADSPO17-00006796

DATE: 05/20

THE GREAT SEAL OF GILA COUNTY ARIZONA
DITAT DEUS
1881

CALL TWO WORKING DAYS BEFORE YOU DIG
602-263-1100
1-800-STAKE-IT
(OUTSIDE MARICOPA COUNTY)

Registered Professional Engineer (Civil)
CERTIFICATE NO.
37422
DAVID J. LEISTIKO
Date Signed 05/08/20
ARIZONA, U.S.A.

SHEET NO.
22 of 28

Kimley»Horn

© 2020 KIMLEY-HORN & ASSOCIATES, INC.

7740 N. 16TH STREET, SUITE 300, PHOENIX, AZ 85020
PHONE: 602-944-5500 | WWW.KIMLEY-HORN.COM

K:\PHX_Roadway\291233000-Rim Trail Bridge\Cadd\12-Sheets\Structures\291233000_DP.dwg 5/8/2020 3:54 PM FLOOD, MARK

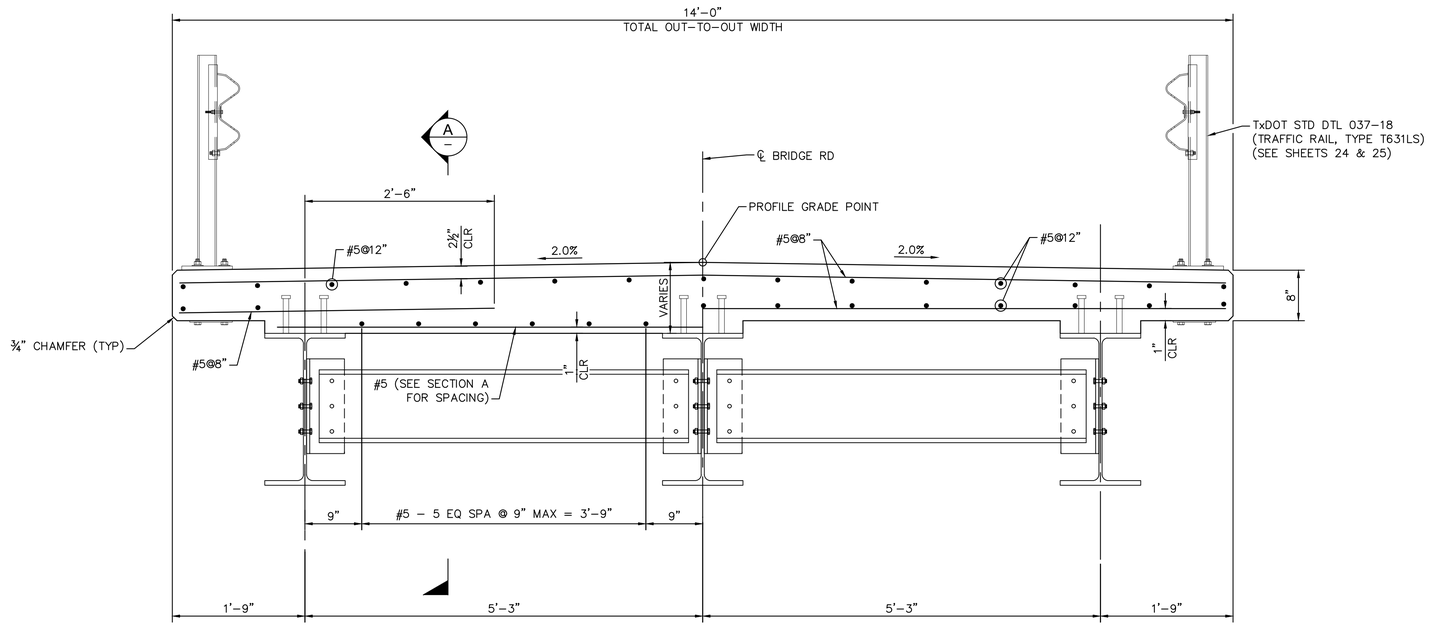

TYPICAL HALF SECTION @ ABUTMENT

SCALE: 1" = 1'-0"
(SHOWING ABUTMENT DIAPHRAGMS)

TYPICAL HALF SECTION @ MID-SPAN

SCALE: 1" = 1'-0"
(SHOWING INTERMEDIATE DIAPHRAGMS)

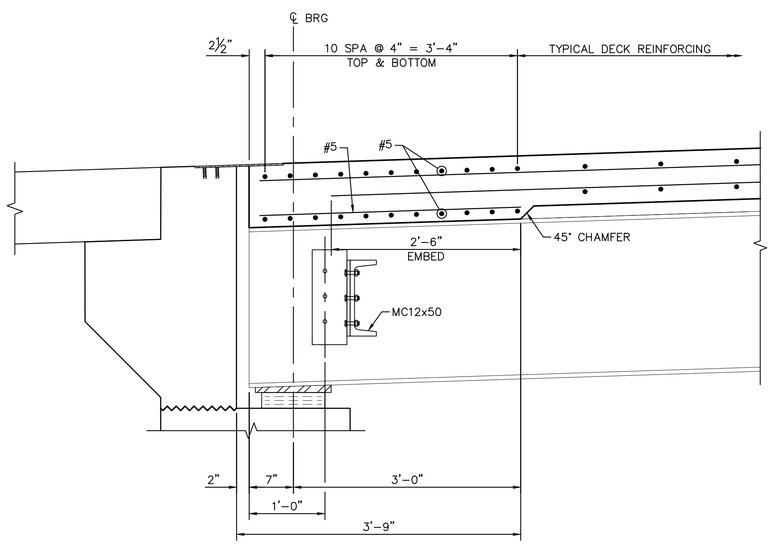

SECTION A

SCALE: 1" = 1'-0"

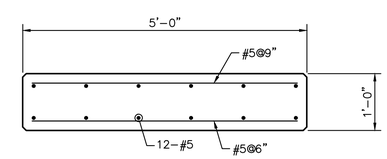

APPROACH SLAB DETAIL

SCALE: ¾" = 1'-0"

CALL TWO WORKING DAYS BEFORE YOU DIG
602-263-1100
1-800-STAKE-IT
(OUTSIDE MARICOPA COUNTY)

Kimley»Horn

© 2020 KIMLEY-HORN & ASSOCIATES, INC.
7740 N. 16TH STREET, SUITE 300, PHOENIX, AZ 85020
PHONE: 602-944-5500 | WWW.KIMLEY-HORN.COM

GILA COUNTY
745 ROSE MOFFORD WAY
GLOBE, AZ 85501

DESIGN: GHG	DRAWN: GHG	CHK: DWK	DATE: 05/08/2020
REV	DESCRIPTION	BY	DATE:

TYPICAL SECTION

GILA COUNTY
RIM TRAIL BRIDGE REPLACEMENT

PROJECT NO. ADSPO17-00006796

DATE: 05/20

Registered Professional Engineer (Civil)
CERTIFICATE NO. 37422
DAVID J. LEISTIKO
Date Signed 05/08/20
ARIZONA, U.S.A.

SHEET NO.
23 of 28

K:\PHX_Roadway\291233000-Rim Trail Bridge\Cadd\12-Sheets\Structures\291233000_DP.dwg 5/8/2020 3:54 PM FLOOD, MARK

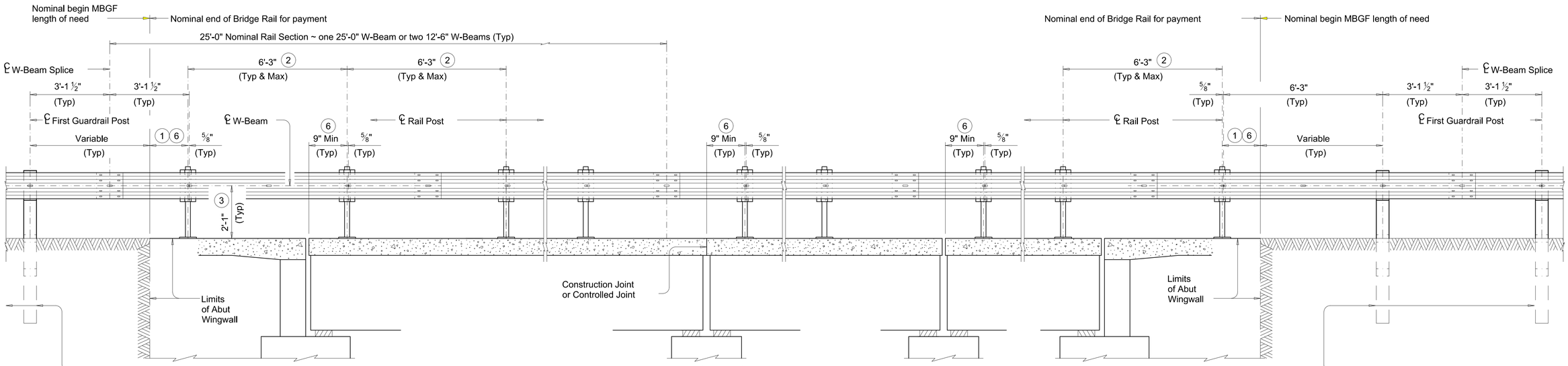

ROADWAY ELEVATION OF RAIL

Showing without overlay.

SEE GENERAL NOTES ON SHEET 12 FOR MATERIAL/STEEL TYPE, GRADE, AND FINISH

(1) 9" Min, 5'-9" Max

(2) Maintain 6'-3" Rail Post spacing wherever possible for use with nominal 25'-0" or 12'-6" W-Beam sections. Symmetry of post spacing on both sides and along the structure is not necessary.

(3) Increase 2" for structures with overlay.

(4) Tighten the first hex nut by hand until the top and bottom edges of the W-Beam engage the Backer Plate (Backer Plate should be snug against the post). Then tighten hex nut one revolution with wrench and secure with the second hex nut.

(5) PL ⅛ x 1 ¾ x 1¾ with ⅜ Dia Hole centered in PL (ASTM A36). Square Guardrail Washer (FWR01).

(6) The post nearest to a slab joint or end of structure may be shifted up to 9" in order to satisfy the minimum offset dimension. Drill a new ¾" Dia hole on the centerline of W-beam for shifted post. Paint hole with two coats of zinc-rich paint conforming to the Item "Galvanizing". All other posts must remain on the typical spacing.

(7) ℄ ⅞" Dia formed holes for ℄ ⅝" Dia heavy hex head anchor bolt (ASTM F3125 Gr A325 or A449) or threaded rod (ATSM A193 Gr B7 or F1554 Gr 105) with one hardened steel washer (ASTM F436) and one regular lock washer placed under heavy hex nut (ASTM A563). One additional heavy hex nut must be furnished and tack weld for each threaded rod. See "Cast-In-Place & Formed Hole Anchor Bolt Options".

(8) ℄ ⅝" Dia heavy hex head anchor bolt (ASTM F3125 Gr A325 or A449) or threaded rod (ATSM A193 Gr B7 or F1554 Gr 105) with one hardened steel washer (ASTM F436) and one regular lock washer placed under heavy hex nut (ASTM A563). One additional heavy hex nut must be furnished and tack weld for each threaded rod. See "Cast-In-Place & Formed Hole Anchor Bolt Options".

The use of this railing is restricted to speeds of 45 mph or less.

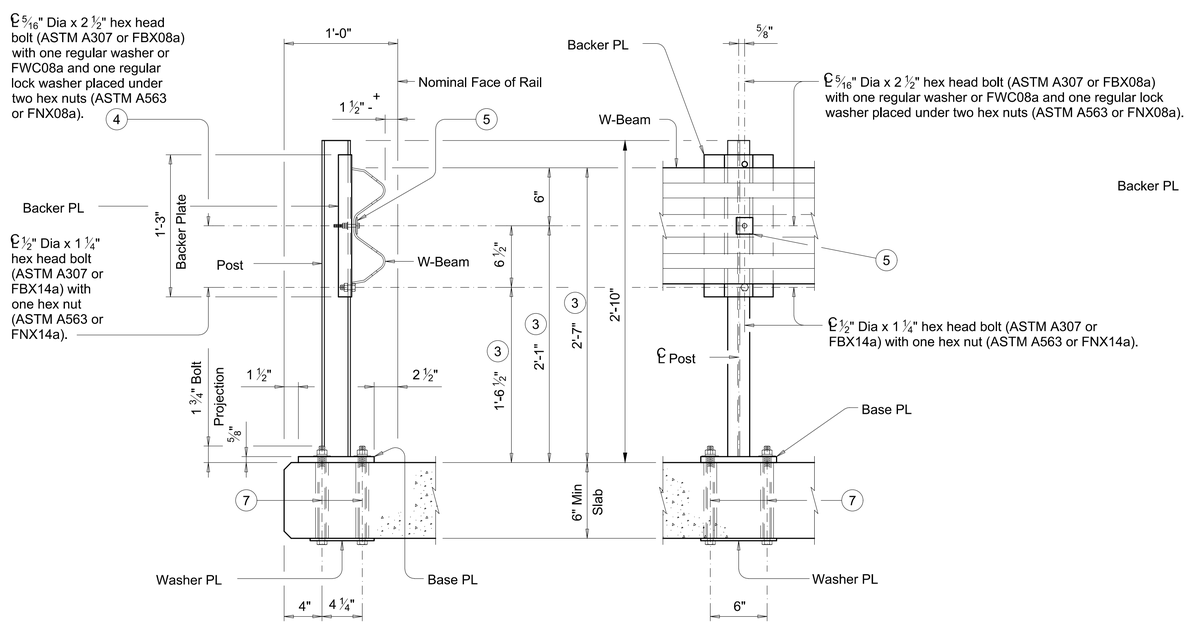

RAIL SECTION

TRAFFIC SIDE RAIL VIEW

RAIL DETAILS ON BRIDGE SLAB

Showing without overlay.

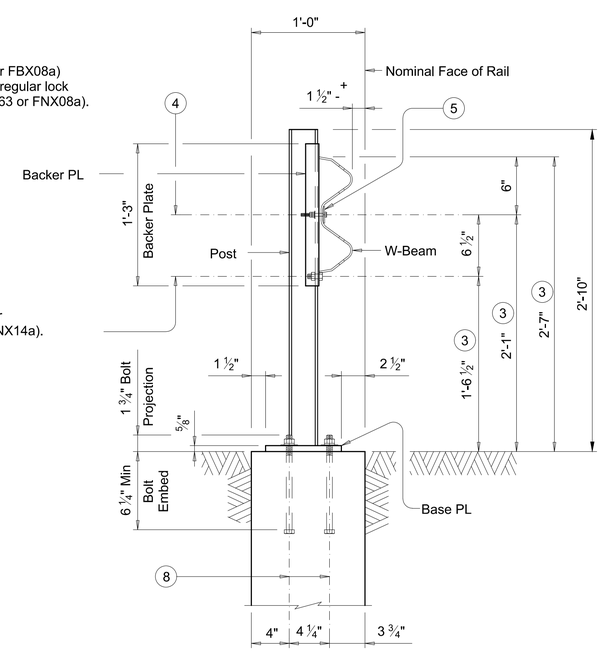

RAIL SECTION ON ABUTMENT WINGWALL

Showing without overlay.

DISCLAIMER:
The use of this standard is governed by the "Texas Engineering Practice Act". No warranty of any kind is made by TxDOT for any purpose whatsoever. TxDOT has assumed no responsibility for the conversion of this standard to other formats or for incorrect results or damages resulting from its use.

DATE:
FILE:

SHEET 1 OF 2

Texas Department of Transportation — Bridge Division Standard

TRAFFIC RAIL

TYPE T631LS

FILE: rlstd037-18.dgn	DN: TxDOT_	CK: AES__	DW: UTR	CK: AES
©TxDOT March_2018___	CONT	SECT	JOB	HIGHWAY
REVISIONS	DIST		COUNTY	SHEET NO. 24

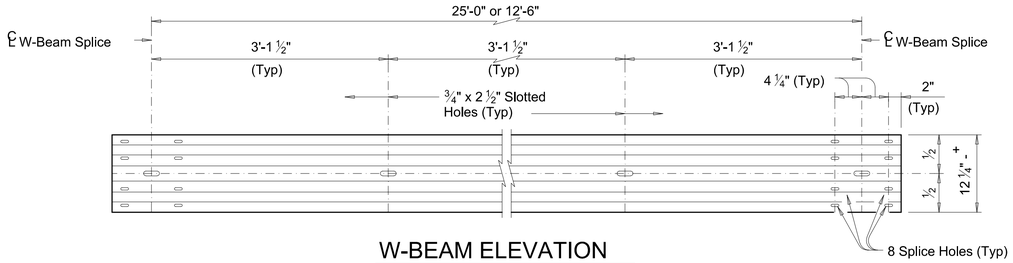

W-BEAM ELEVATION

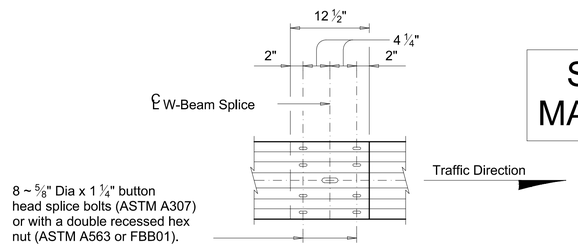

W-BEAM SPLICE ELEVATION

SEE GENERAL NOTES ON SHEET 12 FOR MATERIAL/STEEL TYPE, GRADE, AND FINISH

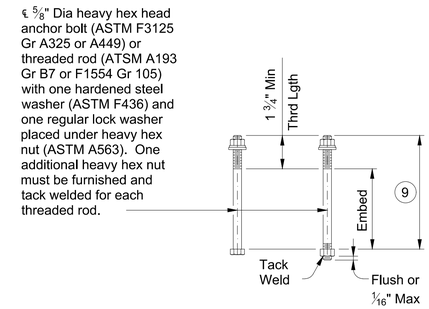

CAST-IN-PLACE & FORMED HOLE ANCHOR BOLT OPTIONS (10)

(9) See "Rail Details On Bridge Slab" and/or "Rail Section On Abutment Wingwall".

(10) See "Material Notes" for anchor bolt information.

(11) Backer PL ⅛ x 8 x 1'-3" (ASTM A1011 CS or SS Gr 33, or A1008 CS or SS Gr 33 (11 Gage acceptable)).

(12) Used for structures with overlay.

(13) Used for structures without overlay.

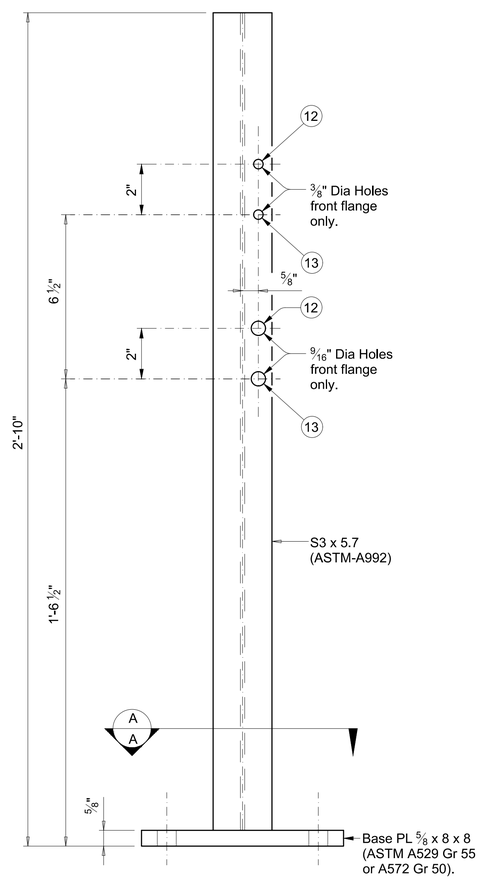

POST ELEVATION

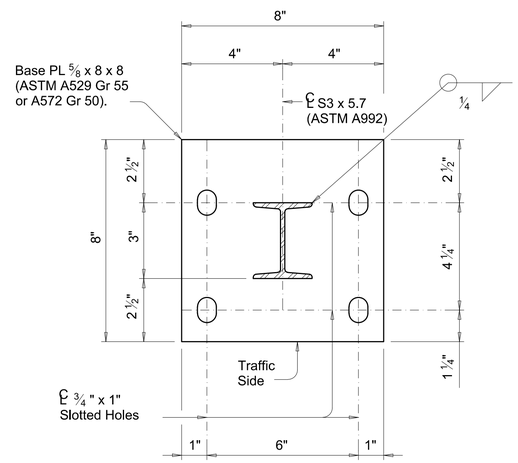

SECTION A-A

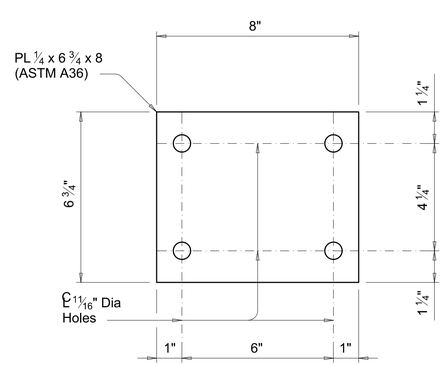

WASHER PLATE DETAIL

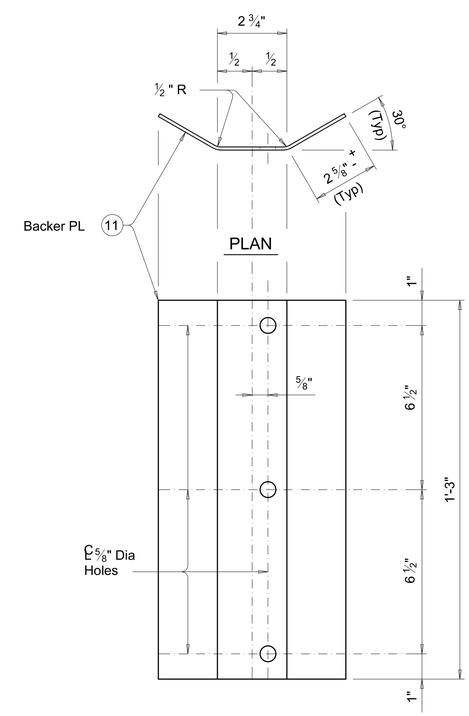

BACKER PLATE

MBGF AND END TREATMENT NOTES:

This traffic railing must be anchored by metal beam guard fence (MBGF) and/or guard fence end treatments. Determine MBGF length of need in accordance with the Roadway Design Manual, unless otherwise specified. The minimum MBGF length of need required for anchoring the railing is: SGT; or DAT plus 12.5' of MBGF, as applicable. Provide CRT posts as shown in "Roadway Elevation of Rail."

CONSTRUCTION NOTES:

Face of rail post must be plumb unless otherwise approved by the Engineer. Post must be perpendicular to adjacent roadway grade. Use epoxy mortar under post base plates if gaps larger than 1/16" exist.

Fully anchored guardrail must be attached to each end of rail. A metal beam guard fence transition is not used with this rail.

At the Contractor's option anchor bolts may be an adhesive anchor system. See "Material Notes".

Test adhesive anchors in accordance with Item 450.3.3, "Tests". Test 3 anchors per 100 anchors installed. Perform corrective measures to provide adequate capacity if any of the tests do not meet the required test load. Repair damage from testing as directed.

It is recommended to show a Rail Layout with rail posts and W-beam splices. Fabricator must submit erection drawings to the Engineer for approval.

Round or chamfer exposed edges of rail post and backer plate to approximately 1/16" by grinding.

Shop drawings are not required for this rail.

MATERIAL NOTES:

~~Galvanize all steel components.~~

Anchor bolts for base plate must be ⅝" Dia ASTM F3125 Gr A325 or A449 bolts (or ASTM A193 Gr B7 or F1554 Gr 105 threaded rods with one tack welded heavy hex nut each) with one hardened steel washer (ASTM F436) and one regular lock washer placed under each heavy hex nut. Nuts must conform to ASTM A563 requirements.

Optional adhesive anchorage system must be ⅝" Dia ASTM A193 Gr B7 or F1554 Gr 105 fully threaded rods with one hardened steel washer (ASTM F436) and one regular lock washer placed under each heavy hex nut. Nuts must conform to ASTM A563 requirements. Embed fully threaded rod into slab and/or abutment wingwall using a Type III, Class C, D, E, or F anchor adhesive. Minimum adhesive anchor embedment depth is 4 ¾". Anchor adhesive chosen must be able to achieve a nominal bond strength in tension of a single anchor, Na, of 8 kips (edge distance must be accounted for). Submit signed and sealed calculations or the manufacturer's published literature showing the proposed anchor adhesive's ability to develop this load to the Engineer for approval prior to use. Anchor installation, including hole size, drilling, and clean out, must be in accordance with Item 450, "Railing."

W-beam must meet the requirements of Item 540, "Metal Beam Guard Fence" except as modified in the plans. The Contractor may furnish rail elements of 25'-0", or 12'-6" (Nominal) lengths. W-Beam must have slotted holes at 3'-1 ½".

Some part numbers from the "Task Force 13" Guide to Standardized Highway Barrier Hardware have been furnished for quick reference.

GENERAL NOTES:

This railing has been successfully evaluated by full-scale crash test to meet MASH TL-2 criteria. This railing can be used for speeds of 45 mph and less.

This rail is designed to deflect approximately 2' to 2'-6" as it contains and redirects the errant vehicle. This rail may not be installed on top of or behind curbs that project above finished grade, on bridges with expansion joints providing more than 5" movement, on retaining walls, or on grade separations and interchanges.

Repairs to impact-damaged post and base plate unit are not permitted. Replace all impact-damaged posts with a new post and base plate unit.

Average weight of railing with no overlay: 13 plf total.

SHEET 2 OF 2

Texas Department of Transportation

Bridge Division Standard

TRAFFIC RAIL

TYPE T631LS

FILE: rlstd037-18.dgn	DN: _TxDOT_	CK: AES__	DW: JTR	CK: AES
©TxDOT March_2018___	CONT	SECT	JOB	HIGHWAY
REVISIONS	DIST		COUNTY	SHEET NO. 25

DISCLAIMER:
The use of this standard is governed by the "Texas Engineering Practice Act". No warranty of any kind is made by TxDOT for any purpose whatsoever. TxDOT assumes no responsibility for the conversion of this standard to other formats or for incorrect results or damages resulting from its use.

DATE:
FILE:

GABION SLOPE PROTECTION NOTES:

GENERAL NOTES:

1. GABION SLOPE PROTECTION SHALL MEET THE REQUIREMENTS OF MACCAFERRI WELDED WIRE GABION PRODUCT INSTALLATION GUIDE AND WELDED WIRE MESH GABION SPECIFICATIONS. CONTRACTOR SHALL USE MACCAFERRI WOVEN WIRE MESH GABIONS AS AN ALTERNATIVE OR APPROVED EQUIVALENT.

2. ALL GABION SLOPE PROTECTION UNITS SHALL CONSIST OF MACCAFERRI 3'–0"(H)x3'–0"(W) OR 3'–0"(H)x6'–0"(W), LENGTH PER PLANS, GABION BASKETS WITH SPECIFIED CONNECTORS, REFER TO MACCAFERRI TYPICAL GABION DRAWINGS FOR DETAILS.

3. IF CONTRACTOR ELECTS TO USE AN ALTERNATE SLOPE PROTECTION SYSTEM AND/OR ALTERNATE MATERIALS, CONTRACTOR SHALL SUBMIT FOR REVIEW SHOP DRAWINGS AND DESIGN CALCULATIONS DETAILING THE GABION BASKET DESIGN, INCLUDING BUT NOT LIMITED TO GEOMETRY, INSTALLATION PROCEDURES, SPECIFICATIONS, TOP OF SLOPE PROTECTION ELEVATIONS AND BOTTOM OF SLOPE PROTECTION ELEVATIONS. SHOP DRAWINGS AND DESIGN CALCULATIONS SHALL BE SIGNED AND SEALED BY A LICENSED CIVIL ENGINEER IN THE STATE OF NEVADA.

CONSTRUCTION NOTES:

1. REFER TO SHEET 27 FOR SLOPE PROTECTION LAYOUT.

2. CONSTRUCT SLOPE PROTECTION IN ACCORDANCE WITH THESE PLANS AND SPECIFICATIONS, AND THE MACCAFERRI WELDED WIRE GABION PRODUCT INSTALLATION GUIDE:

   2.1 ASSEMBLY:
   ROTATE THE GABION PANELS INTO POSITION AND JOIN THE VERTICAL EDGES WITH FASTENERS FOR GABION ASSEMBLY. WHERE LACING WIRE IS USED, WRAP THE WIRE WITH ALTERNATING SINGLE AND DOUBLE HALF HITCHES AT INTERVALS BETWEEN 4 AND 5 INCHES. WHERE SPIRAL FASTENERS ARE USED, CRIMP THE ENDS TO SECURE THE SPIRALS IN PLACE. WHERE RING TYPE ALTERNATE FASTENERS ARE USED FOR BASKET ASSEMBLY, INSTALL THE FASTENERS AT A MAXIMUM SPACING OF 6 INCHES. USE THE SAME FASTENING PROCEDURES TO INSTALL INTERIOR DIAPHRAGMS WHERE THEY ARE REQUIRED. INTERIOR DIAPHRAGMS WILL BE REQUIRED WHERE ANY INSIDE DIMENSION EXCEEDS 36 INCHES FOR GABION BASKETS THICKER THAN 12 INCHES. DIAPHRAGMS WILL BE INSTALLED TO ASSURE THAT NO OPEN INTERVALS ARE PRESENT THAT EXCEED 36 INCHES. FOR BASKETS 12 INCHES OR LESS, RECTANGULAR CELLS ARE ALLOWED WITH DIMENSIONS 36 INCHES IN ONE DIRECTION AND NOT TO EXCEED 72 INCHES IN THE PERPENDICULAR DIRECTION.

   2.2 PLACEMENT:
   PLACE THE EMPTY GABIONS ON THE FOUNDATION AND INTERCONNECT THE ADJACENT GABIONS ALONG THE TOP, BOTTOM, AND VERTICAL EDGES USING LACING WIRE OR SPIRALS. WRAP THE WIRE WITH ALTERNATING SINGLE AND DOUBLE HALF HITCHES AT INTERVALS BETWEEN 4 AND 5 INCHES. SPIRAL FASTENERS ARE COMMONLY USED FOR THE ASSEMBLY AND INTERCONNECTION OF WELDED MESH GABIONS. SPIRALS ARE SCREWED DOWN AT THE CONNECTING EDGES THEN EACH END OF THE SPIRAL IS CRIMPED TO SECURE IT IN PLACE. LACING MAY BE USED AS NEEDED TO SUPPLEMENT THE INTERCONNECTION OF WELDED MESH GABIONS, AND THE CLOSING OF LIDS.

   INTERCONNECT EACH LAYER OF GABIONS TO THE UNDERLYING LAYER OF GABIONS ALONG THE FRONT, BACK, AND SIDES, STAGGER THE VERTICAL JOINTS BETWEEN THE GABIONS OF ADJACENT ROWS AND LAYERS BY AT LEAST ONE–HALF OF A CELL LENGTH.

   2.3 FILLING:
   AFTER ADJACENT EMPTY WIRE GABION UNITS ARE SET TO LINE AND GRADE AND COMMON SIDES PROPERLY CONNECTED, THEY SHALL BE PLACED IN STRAIGHT–LINE TENSION TO GAIN A UNIFORM ALIGNMENT. STAKING OF THE GABIONS MAY BE DONE TO MAINTAIN THE ESTABLISHED PROPER ALIGNMENT PRIOR TO THE PLACEMENT OF ROCK. NO TEMPORARY STAKES SHALL BE PLACED THROUGH GEOTEXTILE MATERIAL. CONNECTING LACING WIRE AND OTHER FASTENERS (AS ALLOWED) SHALL BE ATTACHED DURING THE FILLING OPERATION TO PRESERVE THE STRENGTH AND SHAPE OF THE STRUCTURE.

   INTERNAL CONNECTING CROSS–TILE WIRES SHALL BE PLACED IN EACH UNRESTRAINED GABION CELL GREATER THAN 20 INCHES IN HEIGHT, INCLUDING GABION CELLS LEFT TEMPORARILY UNRESTRAINED. TWO INTERNAL CONNECTING WIRES SHALL BE PLACED CONCURRENTLY WITH ROCK PLACEMENT, AT EACH 12 INCH INTERVAL OF DEPTH. IN WELDED MESH GABIONS THESE CROSSTIES OR STIFFENERS WILL BE PLACED ACROSS THE CORNERS OF THE GABIONS (AT 12 INCHES FROM THE CORNERS) PROVIDING DIAGONAL BRACING. LACING WIRE OR PERFORMED WIRE STIFFENERS MAY BE USED.

   THE GABIONS SHALL BE CAREFULLY FILLED WITH ROCK, EITHER BY MACHINE OR HAND METHODS, ENSURING ALIGNMENT, AVOIDING BULGES, AND PROVIDING A COMPACT MASS THAT MINIMIZES VOIDS. AT NO POINT IN THE FILLING PROCESS MAY ROCK BE MECHANICALLY PLACED FROM A HEIGHT OF OVER 36 INCHES FROM MACHINE TO FILL AREA. MACHINE PLACEMENT WILL REQUIRE SUPPLEMENTING WITH HANDWORK TO ENSURE THE DESIRED RESULTS. THE CELLS IN ANY ROW SHALL BE FILLED IN STAGES SO THAT THE DEPTH OF ROCK PLACED IN ANY ONE CELL DOES NOT EXCEED THE DEPTH OF ROCK IN ANY ADJOINING CELL BY MORE THAN 12 INCHES. ALONG THE EXPOSED FACES, THE OUTER LAYER OF STONE SHALL BE CAREFULLY PLACED AND ARRANGED BY HAND TO ENSURE A NEAR, COMPACT PLACEMENT WITH A UNIFORM APPEARANCE.

   THE LAST LAYER OF ROCK SHALL BE UNIFORMLY LEVELED TO THE TOP EDGES OF THE GABIONS. LIDS SHALL BE PLACED OVER THE ROCK FILLING USING ONLY APPROVED LID CLOSING TOOLS AS NECESSARY. THE USE OF CROWBARS OR OTHER SINGLE POINT LEVERAGE BARS FOR LID CLOSING IS PROHIBITED DUE TO THE POTENTIAL FOR DAMAGE TO THE BASKETS.

   THE GABION LID SHALL THEN BE SECURED TO THE SIDES, ENDS, AND DIAPHRAGMS WITH SPIRAL BINDERS, APPROVED ALTERNATE FASTENERS, OR LACING WIRE WRAPPED WITH ALTERNATING SINGLE AND DOUBLE HALF HITCHES IN THE MESH OPENINGS.

   ANY DAMAGE TO THE WIRE OR COATINGS DURING ASSEMBLY, PLACEMENT AND FILLING SHALL BE REPAIRED PROMPTLY IN ACCORDANCE WITH THE MANUFACTURER'S RECOMMENDATIONS OR REPLACED WITH UNDAMAGED GABION BASKETS.

MATERIALS NOTES:

1. WELDED WIRE MESH:

WIRE PROPERTIES	TEST METHOD	VALUE–GALAVANIZED	VALUE–STAINLESS STELL
WIRE DIAMETER	ASTM A–641	± 0.004" TO SPEC GA	± 0.004" TO SPEC GA
WEIGHT OF ZINC COATING (CLASS III)	ASTM A–90	13.5 GA, 0.70 OZ/SQ FT MIN 12 GA, 0.80 OZ/SQ FT MIN 11/10 GA, 0.85 OZ/SQ FT MIN 9 GA, 0.90 OZ/SQ FT MIN	N/A
TENSILE STRENGTH	ASTM A–370	60,000–80,000 PSI MIN	95,000–115,000 PSI UNLESS OTHERWISE SPECIFIED
WELD STRENGTH MINIMUM LOAD FAILURE (ASTM A–185)	DILLION UNIVERSAL	13.5 GA. 200 LBS (MIN) 12 GA. 450 LBS (MIN) 11/10 GA. 500 LBS (MIN) 9 GA. 600 LBS (MIN)	13.5 GA, 350 LBS (MIN) 12 GA, 400 LBS (MIN) 11/10 GA, 550 LBS (MIN) 9 GA, 650 LBS (MIN)
SPIRAL BINDERS 12 GA./ 13.5 GA LACING WIRE 13.5 GA. CLASS III STIFFENERS LACING WIRE 13.5 GA. CLASS III PREFORMED 11 GA. CLASS III	ASTM A–641 ASTM A–856 ASTM A–90	12 GA COATED 0.136(MIN)–0.146(MAX) 13.5 COATED 0.117(MIN)–0.127(MAX) 11 GA COATED 0.150(MIN)–0.160(MAX)	12GA. UNCOATED 0.1055" 13.5 GA. UNCOATED 0.087" 11 GA. UNCOATED 0.120"

COATING PROPERTIES	TEST METHOD	VALUE
TENSILE STRENGTH	ASTM D–638	2275 PSI MINIMUM
ABRASION RESISTANCE	ASTM D–1242–95	WEIGHT LOSS < 12% (METHOD B) AT 200 CYCLES
HARDNESS	ASTM D–2240	75 SHORE A MINIMUM
FLEXIBILITY	MANDREL BEND	⅛" SUBJECT TO A SINGLE 360 BEND @ °F
MODULUS OF ELASTICITY	ASTM D–638	NOT LESS THAN 1980 PSI AT 100% STRAIN
SALT SPRAY RESISTANCE	ASTM B–117	PERIOD OF TEST 3000 HOURS
WATER ABSORPTION	ASTM G–53 Q.U.V. TESTER	3000 HOURS – NO EFFECT

WIRE MESH DIMENSIONS – TOLERANCES ASTM–F2453			
INDIVIDUAL SPACING	2">± 0.125"; 2"<± 0.0625"	DIAGONAL	± 1.000"
OVERALL LENGTH	6'<± 0.125"; 6'>± 0.250"	FLATNESS	± 2.000"
WIDTH	± 0.125"	PIGTAILS	0.250"

1. ROCK:
   THE ROCK FOR GABIONS SHALL BE HARD, ANGULAR TO ROUND, DURABLE AND OF SUCH QUALITY THAT THEY SHALL NOT DISINTEGRATE ON EXPOSURE TO WATER OR WEATHERING DURING THE LIFE OF THE STRUCTURE. GABION ROCKS SHALL RANGE BETWEEN 4 IN. AND 8 IN. THE RANGE IN SIZES MAY ALLOW FOR A VARIATION OF 5% OVERSIZE AND/OR 5% UNDERSIZE ROCK, PROVIDED IT IS NOT PLACED ON THE GABION EXPOSED SURFACE. THE SIZE SHALL BE SUCH THAT A MINIMUM OF TWO LAYERS OF ROCK MUST BE ACHIEVED WHEN FILLING THE GABIONS.

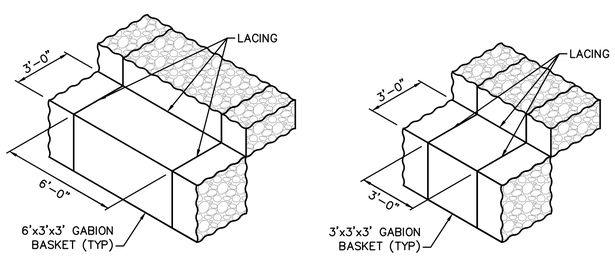

GABION BASKET ISOMETRIC VIEW
SCALE: 1" = 1'–0"

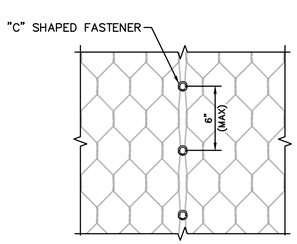

MECHANICAL LACING DETAIL
SCALE: 1½" = 1'–0"

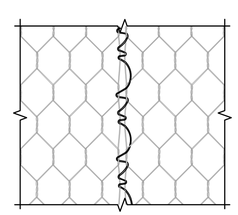

MANUAL LACING DETAIL
SCALE: 1½" = 1'–0"

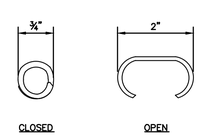

"C" SHAPED FASTENERS
SCALE: 6" = 1'–0"

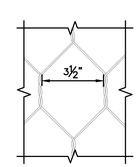

GABION BASKET WIRE
SCALE: 3" = 1'–0"

NOTES:

EDGES ARE JOINTED TOGETHER USING EITHER OF THE THE APPROPRIATE LACING TECHNIQUES:

A. MANUAL: CONTINUOUS WIRE LOOPED TIGHTLY AROUND EVER OTHER MESH OPENING, ALTERNATING SINGLE AND DOUBLE LOOPS. SEE DETAIL 3 FOR DETAILS.

B. MECHANICAL: USING A PNEUMATIC OR HAND POWER TOOL, EMPLOYING STAINLESS STEEL "C" SHAPED FASTENERS. FOR CONTINUITY AND STRENGTH, THE RECOMMENDED SPACING IS 3" TO 4¾", MAX 6". SEE DETAIL 4 FOR DETAILS.

CALL TWO WORKING DAYS BEFORE YOU DIG
602-263-1100
1-800-STAKE-IT
(OUTSIDE MARICOPA COUNTY)

Kimley»Horn

© 2020 KIMLEY–HORN & ASSOCIATES, INC.
7740 N. 16TH STREET, SUITE 300, PHOENIX, AZ 85020
PHONE: 602–944–5500 | WWW.KIMLEY–HORN.COM

GILA COUNTY
745 ROSE MOFFORD WAY
GLOBE, AZ 85501

DESIGN:	DRAWN:	CHK:	DATE: 05/08/2020
REV	DESCRIPTION	BY	DATE:

GABION BASKET DETAILS

GILA COUNTY
RIM TRAIL BRIDGE REPLACEMENT

PROJECT NO. ADSPO17-00006796
DATE: 05/20

Registered Professional Engineer (Civil) CERTIFICATE NO. 37422 DAVID J. LEISTIKO Date Signed 05/08/20 ARIZONA, U.S.A.

SHEET NO.
26 of 28

K:\PHX_Roadway\291233000–Rim Trail Bridge\Cadd\12–Sheets\Structures\291233000_GAB.dwg 5/8/2020 3:57 PM FLOOD, MARK

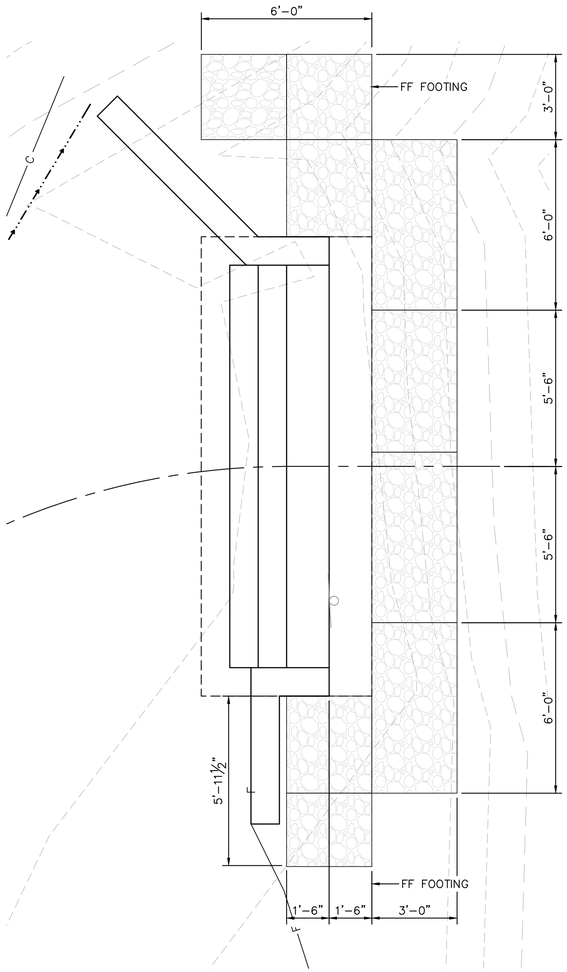

GABION BASKET LAYOUT (ABUT 1)
SCALE: ⅜" = 1'-0"

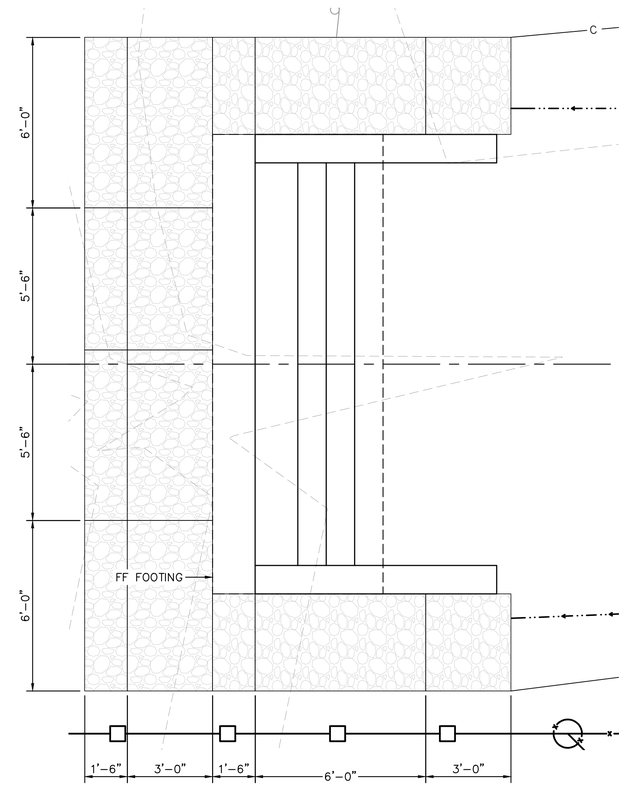

GABION BASKET LAYOUT (ABUT 2)
SCALE: ⅜" = 1'-0"

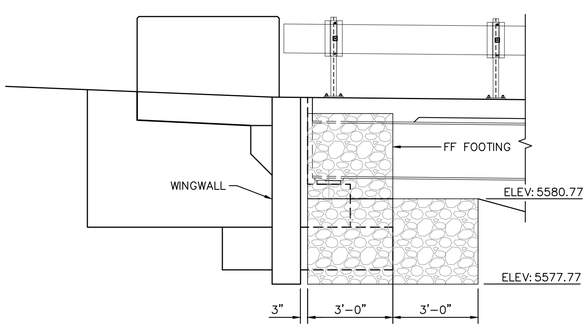

GABION BASKET ELEVATION (ABUT 1)
SCALE: ⅜" = 1'-0"

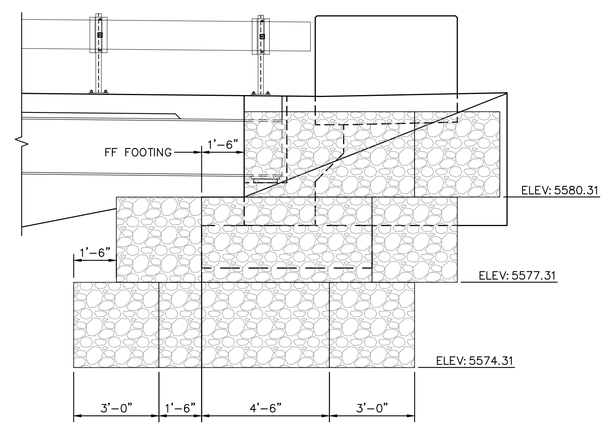

GABION BASKET ELEVATION (ABUT 2)
SCALE: ⅜" = 1'-0"

GILA COUNTY
745 ROSE MOFFORD WAY
GLOBE, AZ 85501

DESIGN: GHG	DRAWN: GHG	CHK: DWL	DATE: 05/08/2020
REV	DESCRIPTION	BY	DATE:

GABION BASKET LAYOUT

GILA COUNTY
RIM TRAIL BRIDGE REPLACEMENT

PROJECT NO. ADSPO17-00006796
DATE: 05/20

CALL TWO WORKING DAYS BEFORE YOU DIG
602-263-1100
1-800-STAKE-IT
(OUTSIDE MARICOPA COUNTY)

Registered Professional Engineer (Civil)
CERTIFICATE NO. 37422
DAVID J. LEISTIKO
Date Signed 05/08/20
ARIZONA, U.S.A.

Kimley»Horn

© 2020 KIMLEY-HORN & ASSOCIATES, INC.
7740 N. 16TH STREET, SUITE 300, PHOENIX, AZ 85020
PHONE: 602-944-5500 | WWW.KIMLEY-HORN.COM

SHEET NO.

K:\PHX_Roadway\291233000-Rim Trail Bridge\Cadd\12-Sheets\Structures\291233000_GAB.dwg 5/8/2020 3:58 PM FLOOD, MARK

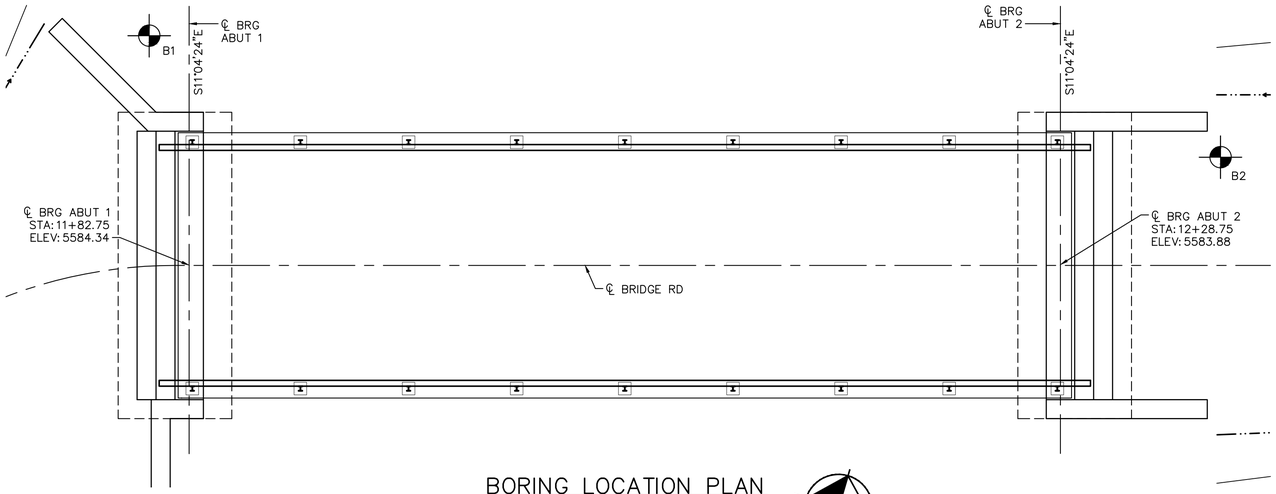

BORING LOCATION PLAN

SCALE: ¼" = 1–0"'

NOTES:

1. INFORMATION CONTAINED ON FOUNDATION DATA SHEETS IS MADE AVAILABLE TO PROSPECTIVE BIDDERS FOR INFORMATION PURPOSES ONLY AND IS NOT TO BE CONSIDERED A PART OF THE CONTRACT PAPERS.
2. INFORMATION IS DEVELOPED AS ACCURATELY AS POSSIBLE BY METHODS UTILIZED. HOWEVER, THE COUNTY ACCEPTS NO RESPONSIBILITY FOR ANY CONDITIONS ENCOUNTERED WHICH MAY BE AT VARIANCE FROM INFORMATION CONTAINED HEREIN.
3. THE ABSENCE OF A GROUNDWATER INDICATION DOES NOT CONSTITUTE A REPRESENTATION THAT THE GROUNDWATER WILL NOT BE PRESENT DURING CONSTRUCTION. GROUNDWATER IS INDICATED HEREIN ONLY WHEN FOUND DURING THE FOUNDATION INVESTIGAION AND REPRESENTS THAT CONDITION ONLY ON THE DATE OF THE INVESTIGATION.
4. CLASSIFICATION OF MATERIALS IN IN ACCORDANCE WITH AASHTO "MANUAL ON FOUNDATION INVESTIGATIONS" AND UNIFIED SOIL CLASSIFICATION SYSTEM, AND IS BASED ON FIELD INSPECTION AND IS NOT TO BE CONSTRUED TO IMPLY MECHANICAL ANALYSIS.
5. SAMPLERS ARE DRIVEN WITH 140–POUND HAMMER WITH 30" FREE–FALL, NO CUSHION.
6. FOUNDATION INVESTIGATIONS WERE CONDUCTED BY RICKER, ATKINSON, McBEE, MORMAN & ASSOCIATES GEOTECHNICAL ENGINEERING REPORT UPPER EAST VERDE RIVER RIM TRAIL SUBDIVISION, RAMM PROJECT NO. G24817 DATED MAY 4, 2018.

LEGEND

ASTM Designation: D2487-11
(Based on Unified Soil Classification System)

CLASSIFICATION OF SOILS

Criteria for Assigning Group Symbols and Group Names Using Laboratory Tests			Soil Classification Group Symbol	Soil Classification Name
COARSE-GRAINED SOILS More than 50% retained on No. 200 Sieve	Gravels More than 50% coarse fraction retained on No. 4 Sieve	Clean Gravels Less than 5% fines	$C_U \geq 4$ and $1 < C_C < 3$	GW Well graded gravel
			$C_U < 4$ and/or $1 > C_C > 3$	GP Poorly graded gravel
		Gravels with Fines More than 12% fines	Fines classify as ML or MH	GM Silty gravel
			Fines classify as CL or CH	GC Clayey gravel
	Sands 50% or more of coarse fraction passes No. 4 sieve	Clean Sands Less than 5% fines	$C_U \geq 6$ and $1 < C_C < 3$	SW Well-graded sand
			$C_U < 6$ and/or $1 > C_C > 3$	SP Poorly graded sand
		Sands with Fines More than 12% fines	Fines classify as ML or MH	SM Silty sand
			Fines classify as CL or CH	SC Clayey sand
FINE-GRAINED SOILS 50% or more passes the No. 200 Sieve	Silts and Clays Liquid limit less than 50	Inorganic	PI > 7 and plots on or above "A" line	CL Lean clay
			PI < 4 or plots below "A" line	ML Silt
		Organic	Liquid Limit - oven dried / Liquid limit - not dried < 0.75	OL Organic clay / Organic silt
	Silts and Clays Liquid limit 50 or more	Inorganic	PI plots on or above "A" line	CH Fat clay
			PI plots below "A" line	MH Elastic silt
		Organic	Liquid limit - oven dried / Liquid limit - not dried < 0.75	OH Organic clay / Organic silt
HIGHLY ORGANIC SOILS	Primarily organic matter, dark in color, and organic odor			PT Peat

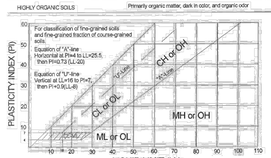

TEST BORING LOG DEFINITIONS

Blows per foot using 140 pound hammer with 30 inch free-fall.

Depth, feet	Blows/Foot C	Blows/Foot NR	Sample Type	Dry Density pcf	Water Content, %	Unified Classification	Description

C = Continuous Penetration Resistance (2 inch diameter rod)
N = Standard Penetration Resistance (ASTM D1586)
R = Penetration Resistance (3 inch diameter ring line sampler)

GRAIN SIZES

U.S. STANDARD SERIES SIEVE: 200, 40, 16, 4, 3/4", 3", 12"
CLEAR SQUARE SIEVE OPENINGS

SILTS & CLAYS DISTINGUISHED ON BASIS OF PLASTICITY | SAND: FINE, MEDIUM, COARSE | GRAVEL: FINE, COARSE | COBBLES | BOULDERS

MOISTURE CONDITION (INCREASING MOISTURE →)

DRY | SLIGHTLY DAMP | DAMP | MOIST (Plastic Limit) | VERY MOIST | WET (SATURATED) (Liquid Limit)

CONSISTENCY CORRELATION

CLAYS & SILTS	BLOWS/FOOT*
VERY SOFT	0-2
SOFT	2-4
FIRM	4-8
STIFF	8-16
VERY STIFF	16-32
HARD	OVER 32

RELATIVE DENSITY CORRELATION

SANDS & GRAVELS	BLOWS/FOOT*
VERY LOOSE	0-4
LOOSE	4-10
MEDIUM DENSE	10-30
DENSE	30-50
VERY DENSE	OVER 50

*Number of blows of 140 lb hammer falling 30" to drive a 2" O.D. (1-3/8" I.D.) split-spoon sampler (ASTM D1586).

RAMM Project No. G24817 A2

TEST BORING LOG

Boring No. 1 | Date: 3-20-18 | By: AJS
Project No. G24817 | Sheet No. 1 Of 1
Project Name: Bridge No. 7881 Replacement, Gila County, AZ | Ground Elevation: 5600'
Drill Equipment: CME 75 | Driller: Wildcat Drilling , Inc.

Depth, feet	Blows/Foot C	Blows/Foot N / R	Rock Core Run #	Rate(min/in)	Recovery %	RQD %	Sample Type	Dry Density / Unit Weight (pcf)	Water Content, %	Unified Classification	Description
		8					R	105	12	CL-GC	Gravelly Sandy Clay, Trace to Some Cobbles and Occasional Boulders; red brown, damp to very damp, firm to very stiff, medium plasticity fines, gravel, cobbles and boulders increase in frequency with depth. Stopped drilling at 4 feet. Switched to NQ Double Tube Core Barrel
		50/6"					R	*	6		
5			1	0.35	100	100					5
			2	0.59	80	37					M_{OS} = Martin Formation: Upper Member, Siltstone/ Mudstone; reddish brown, slightly to lightly weathered, strong to very strong, hard, very thinly bedded, lightly jointed. Green shale banding, inclusions or nodules common.
10										5 W/D	10
			3	0.54	100	77				W/D	
										W/D	
15									▽	5	15
			4	0.44	98	40				W/D	M_{OT} = Martin Formation: Upper Member, Transition Zone; reddish brown to olive green grey, slightly weathered to unweathered, very strong, hard to very hard, heavily banded, occasionally jointed. Occasional small voids.
20											20
			5	0.43	100	81					
											Stopped coring at 21.5 feet. Groundwater observed at 16 feet (192") below ground level. W/D = Highly Weathered/Decomposed Bedrock.
25											25

* Sample too disturbed to determine density.

This boring log represents the conditions encountered on the date of drilling at this particular location. No other warranty is expressed or implied to the actual conditions which may exist within the vicinity of this boring location.

RAMM Project No: G24817 A3

TEST BORING LOG

Boring No. 2 | Date: 3-20-18 | By: AJS
Project No. G24817 | Sheet No. 1 Of 2
Project Name: Bridge No. 7881 Replacement, Gila County, AZ | Ground Elevation: 5600'
Drill Equipment: CME 75 | Driller: Wildcat Drilling , Inc.

Depth, feet	Blows/Foot C	Blows/Foot N / R	Rock Core Run #	Rate(min/in)	Recovery %	RQD %	Sample Type	Dry Density / Unit Weight (pcf)	Water Content, %	Unified Classification	Description
		14					R	103	6	SM-GM	Silty Gravelly Sand, With Cobbles and Occasional Boulders; tan to red brown, damp, medium dense to dense, non-plastic fines, gravel, cobbles and boulders increase in frequency with depth.
		34					R	97	5		
5											5
		25					R	97	7		
									▽		
10											10 Stopped drilling at 10 feet. Switched to NQ Double Tube Core Barrel
		25					R	---	8		
			1	0.39	76	0					M_{OS} = Martin Formation: Upper Member, Siltstone/Mudstone shale; red brown, slightly to lightly weathered, strong to very strong, hard, very thinly bedded, lightly jointed. Green/shale banding, inclusions or nodules common.
15										W/D	15
										W/D	
										W/D	
			2	0.44	87	42				W/D	
20										5 10 W/D W/D	20
			3	0.35	93	57					M_{OT} = Martin Formation: Upper Member, Transition Zone; red brown to olive green grey, slightly weathered to unweathered, very strong, hard to very hard, heavily banded, occasionally jointed. Occasional small voids.
25										70	25

-Continued-

This boring log represents the conditions encountered on the date of drilling at this particular location. No other warranty is expressed or implied to the actual conditions which may exist within the vicinity of this boring location.

RAMM Project No: G24817 A4

TEST BORING LOG

Boring No. 2 cont. | Date: 3-20-18 | By: AJS
Project No. G24817 | Sheet No. 2 Of 2
Project Name: Bridge No. 7881 Replacement, Gila County, AZ | Ground Elevation: 5600'
Drill Equipment: CME 75 | Driller: Wildcat Drilling , Inc.

Depth, feet	Blows/Foot C	Blows/Foot N / R	Rock Core Run #	Rate(min/in)	Recovery %	RQD %	Sample Type	Dry Density / Unit Weight (pcf)	Water Content, %	Joint Orientation	Unified Classification	Description
												M_{OT} = Martin Formation Transition Zone : continued
			4	0.38	100	97						M_{OL} = Martin Formation: Upper Member, Limestone; reddish gray to greenish grey, unweathered, very strong, very hard, very thinly bedded, occasionally jointed. Occasional dendritic staining.
30												30
			5	0.31	100	73						
35												Stopped coring at 33.0 feet. Groundwater observed at 8 feet (100") below ground level. W/D = Highly Weathered/Decomposed Bedrock. 35
40												40
45												45
50												50

This boring log represents the conditions encountered on the date of drilling at this particular location. No other warranty is expressed or implied to the actual conditions which may exist within the vicinity of this boring location.

RAMM Project No: G24817 A5

THE GREAT SEAL OF GILA COUNTY ARIZONA DITAT DEUS 1881

CALL TWO WORKING DAYS BEFORE YOU DIG
602-263-1100
1-800-STAKE-IT
(OUTSIDE MARICOPA COUNTY)

Registered Professional Engineer (Civil) CERTIFICATE NO. 37422 DAVID J. LEISTIKO Date Signed 05/08/20 ARIZONA, U.S.A.

Kimley»Horn

© 2020 KIMLEY–HORN & ASSOCIATES, INC.
7740 N. 16TH STREET, SUITE 300, PHOENIX, AZ 85020
PHONE: 602–944–5500 | WWW.KIMLEY–HORN.COM

GILA COUNTY
745 ROSE MOFFORD WAY
GLOBE, AZ 85501

REV	DESCRIPTION	BY	DATE:

DESIGN: CHG | DRAWN: CHG | CHK: DJL | DATE: 05/08/2020

FOUNDATION DATA

GILA COUNTY
RIM TRAIL BRIDGE REPLACEMENT

PROJECT NO. ADSPO17-00006796
DATE: 05/20

SHEET NO.
28 of 28

K:\PHX_Roadway\291233000–Rim Trail Bridge\Cadd\12–Sheets\Structures\291233000_F–D.dwg 5/8/2020 4:00 PM FLOOD, MARK

File Name : 07881-2020-05-14-Photo-1.JPG

Description : Roadway ID looking west.

File Name : 07881-2020-05-14-Photo-3.JPG

Description : Typical deck condition.

File Name : 07881-2020-05-14-Photo-2.JPG

Description : Elevation ID looking south.

ARF-6230 **Regular Agenda Item** **4. H.**

Regular BOS Meeting

Meeting Date:	10/06/2020		
Submitted For:	Malissa Buzan, Director		
Submitted By:	Mary Springer, Finance Director		
Department:	Finance		
Fiscal Year:	FY20-21	Budgeted?:	Yes
Contract Dates Begin & End:	July 1, 2020 - June 30, 2021	Grant?:	Yes
Matching Requirement?:	No	Fund?:	New

Information

Request/Subject

Approve Lease Agreement with Payson Unified School District to provide space for Gila County GEST (Gila Employment and Special Training) Program.

Background Information

Gila Employment and Special Training (GEST) coordinates with the county, state, and federal governments in a joint effort to better serve the citizens of Gila County. The Demonstration Project began in 1975 and was founded on the principle of "acceptance". Establishing community acceptance of individuals with disabilities is and always will be our priority. In 1996, the program name was changed to Gila Employment and Special Training (GEST), but our goal remains the same as we provide daily living skills and employment supports to all GEST clients. The Community Services Department currently leases the building from the Payson Unified School District to provide space for the GEST Program. The new lease formalizes the continued use of the leased building located at 501 S. McLane Road, Payson, AZ. The lease cost is $500 per month and the new agreement allows for (4) annual renewal periods.

Evaluation

Designated space to provide service for the GEST Program is necessary and the current leased space is adequate and accessible to our clients.

Conclusion

By approving this Lease Agreement, the GEST Program will continue to have a designated site to be used for Program activities.

Recommendation

Staff recommends approval of a new Lease Agreement with the Payson Unified School District.

Suggested Motion

Information/Discussion/Action to approve a Lease Agreement with the Payson Unified School District for the facility located at 501 S. McLane Road, Payson, Arizona whereby the County will lease space for its Gila Employment and Special Training Program beginning July 1, 2020 through June 30, 2021. **(Mary Springer)**

Attachments

Lease Agreement with Payson Unified School District

LEASE AGREEMENT

This "Shared Use Lease Agreement" is entered into this _1st__ day of _July__, 2020 (the "Agreement"), by and between Payson Unified School District ("Landlord" or "PUSD"), as Lessor, and Gila County on behalf of Gila Employment and Special Training ("Tenant" or "GEST), as Lessee. PUSD and GEST shall sometimes be referred to collectively herein as the "Parties" (and individually as a "Party").

RECITALS

1. PUSD and GEST desire to enter into this Agreement, whereby GEST would occupy a portion of PUSD's property as more fully described in Exhibit "A", attached hereto for "adult day treatment center."

2. Arizona Revised Statutes 15-342(9) permits school district governing boards to enter into appropriate leases, as lessors, for school buildings or grounds for periods of less than twenty (20) years without voter approval. Arizona Revised Statute 15-1105(A) permits school district governing boards to enter into leases of school buildings, among other purposes, for education and governmental purposes. PUSD will charge a reasonable fee for the lease and shared use of the property identified below-on the basis that such use will be for educational and governmental purposes-which rental fee may include goods contributed or services rendered by or on behalf of GEST to PUSD.

PROVISIONS

In consideration of the mutual promises and covenants set forth in this Agreement, PUSD and GEST agree as follows;

1. Incorporation: The above recitals are incorporated by reference as though fully set forth as material provisions of this Agreement.

2. Leased Premises: PUSD hereby leases to GEST, and GEST leases from PUSD on a shared use basis, certain existing real property located at 501 South McLane Road, as more fully delineated and described in Exhibit "A" to this Agreement (the "Leased Premises"), which exhibit is hereby incorporated by reference herein. GEST shall have primary use of the Leased Premises for its treatment center, and agrees to assign an on-site contact for the purpose of coordinating the schedule of the occasional PUSD event on the Leased Premises.

3. Term and Renewal: This Agreement shall commence July 1, 2020, shall extend for one (1) year, and shall terminate at 12:00 midnight (Arizona time) on June 30, 2021 (the "Initial Lease Term"), unless renewed as set forth in this paragraph. The Agreement may be renewed up to four (4) times, in successive terms of one (1) year each, by mutual written agreement of PUSD and GEST, conditioned upon formal approval by the PUSD Governing Board. Notwithstanding anything in this Agreement to the contrary, the Parties agree that if the PUSD Governing Board votes that PUSD has a need for sole use and possession of the Leased Premises, then PUSD may terminate this Agreement upon at least six (6) months advance written notice to GEST hereunder continuing in full force and effect until such date of termination as has been communicated by PUSD to GEST in writing.

4. Construction of Any Improvements: It is agreed that no improvements or modifications to the Leased Premises may be performed by GEST without advance, written authorization and consent of

DocuSign Envelope ID: 319ED952-D12F-42F7-B01D-22EBE88D588D

PUSD – which authorization and consent may be withheld by PUSD in its sole and absolute discretion. Upon advance written approval and consent of the Landlord, Tenant will be solely responsible to fund,

design, and construct any desired improvements on and/or modifications to the Leased Premises rented from PUSD (the "Improvements"). All plans and specifications for construction of the Improvements must be approved by PUSD in writing prior to commencement of construction. It is not currently expected or anticipated that there will be any need for or request by GEST to be able to construct any such improvements, but the inclusion of this clause in the Agreement is to account for such situation in the unlikely event that the construction of Improvements is desired in the future by GEST.

5. Title to Any Improvements: Title to any Improvements shall vest in PUSD upon termination of the Agreement. Upon termination or expiration of this Agreement, sole and peaceable possession of the Leased Premises, including any and all Improvements, shall be given by GEST and PUSD.

6. Tenant's Use: Tenant shall use the Leased Premises as an adult day treatment center between the hours of 8:00am and 5:00pm on Mondays through Fridays. Tenant shall comply with all statutes, codes, ordinances, and conditions applicable to the ownership, use, maintenance, occupancy, operation, and improvements of the Leased Premises. PUSD is under no obligation to consent to additional or alternative uses or to the making of any Improvements to the Leased Premises by GEST.

7. Tobacco, Drugs and Alcohol: Tenant shall not keep, permit, or allow any non-prescribed drugs, tobacco, tobacco products, liquors, alcohol, or other beverages of any intoxicating nature or tendency to be sold, used, or possessed on or in the Leased Premises or anywhere on or in any portion of the grounds comprising the Leased Premises and/or adjacent to the Leased Premises.

8. Interference with Landlord's Operations: If Tenant's operations materially and adversely affect the operations of PUSD, PUSD shall give prompt and reasonable written notice specifying the corresponding objectionable practices and/or effects. Tenant shall immediately endeavor to correct such operations or practices. If he corrections are not satisfactory within the PUSD's sole and absolute discretion, PUSD shall have the option to terminate this Agreement upon sixty (60) days written notice in the ordinary course of operations or to terminate it on such shorter notice as is reasonable and prudent in case of an emergency and/or exigent circumstances.

9. Maintenance and Repairs: Tenant shall clean, maintain, and repair the Leased Premises (all areas used) at its own expenses during the term of the Agreement and any renewal(s) thereof. Tenant shall also provide all custodial and cleaning services necessary to keep the Leased Premises maintained consistent with the standards and expectation of PUSD regarding its other physical facilities. GEST will also maintain the cleanliness of the parking lot. Any furnishings located in and upon the Lease Premises will be available for use by GEST, in and subject to the sole and absolute discretion of PUSD.

10. Utilities: Landlord, at its own expense, will furnish the following utilities for the tenant's benefit: water, gas, electric, garbage pickup, and sewer. Landlord is not obligated to upgrade the type or extent of utility service available at the Leased Premises or to incur any specific utility expenses in connection with the Lease Premises.

11. Insurance:

A. At all times during the term of this Agreement and during any renewal thereof, Tenant shall maintain comprehensive general liability insurance, at its sole expense, with coverage limits of not less than $1,000,000.00 per occurrence and $3,000,000.00 aggregate limit for bodily injury and property damage, issued by and insurance carrier approved by Landlord and naming Landlord and its employees,

agents, and representatives as additional insureds. Said policy of insurance shall provide liability insurance coverage of all the Tenant's activities in and upon the Leased Premises and shall have not exclusions relation to sexual assault, abuse, or molestation. Tenant shall also carry comprehensive liability insurance for owned, non-owned, and hired vehicles with combined single limit per accident for property damage and bodily injury of not less than $1,000,000.00.

B. Tenant shall require its contractors who construct any Improvements to carry insurance equivalent to that required in subparagraph A about, and Tenant shall ensure that Tenant or its contractor shall maintain a Builders All-Risk policy during the course of construction of any Improvements in an amount equal to the full amount of the cost of such Improvements, if and as applicable – with Landlord names as an additional insured thereunder.

C. Certificates evidencing all of such insurance shall be provided to Landlord and shall guarantee thirty (30) days advance written notice to Landlord of cancellation, non-renewal, or material change(s). Tenant shall also provide Landlord with evidence of statutorily required workers' compensation insurance for all employees working at, in, or upon the Leased Premises. Tenant's insurance provided hereunder shall be provided by a company authorized to do business in the State of Arizona and approved in writing by Landlord. All such insurance shall name Landlord and its officials, agents, employees, and volunteers as additional insureds with respect to liability arising out of the use of the Leased Premises by Tenant and/or any of Tenant's activities and/or obligations in connection with this Agreement.

12. Destruction of the Leased Premises: In the event the Leased Premises are destroyed by fire, the elements, or any other cause-or are so damaged as to render them untenantable - the remaining lease shall be either abated or terminated, at the election of PUSD.

13. Zoning, Permits, and Governmental Approvals: Landlord does not warrant that the Lease Premises are zoned for the use contemplated by the Tenant. Tenant shall bear the cost of procuring zoning or use changes (if any), permits, and/or approvals, as may be required by law for Tenant's intended use of the Leased Premises. If Tenant is unable to procure any required zoning or other necessary permitting and/or approvals, then within ten (10) day's advance written notice to Landlord.

14. Signage and Advertising: tenant shall have the right to display on the Leased Premises signage that is in compliance with all applicable municipal and/or other governmental ordinances and regulations with respect thereto – and in keeping with the dignity of the Lease Premises and its surroundings – subject to the prior written approval of Landlord (which may be withheld or withdrawn in the Landlord's sole and absolute discretion). No signage or advertising by Tenant shall tend to mislead anyone that the Landlord has any relationship with the Tenant or its operations other than merely as Landlord.

15. Subletting, Assignment, and Encumbrances: GEST shall not have the right to sublet or assign all or any part of the Leased Premises. GEST has not right to pledge or encumber all or any part of the Leased Premises or any Improvements thereto. GEST agrees not to engage in any conduct that will result in any encumbrance of any nature whatsoever in relation to or upon the Leased Premises.

16. Mechanics' Liens: During the term of this Agreement and any approved extensions thereof, Tenant shall keep the Leased Premises free of mechanics' liens and other liens of any nature whatsoever and at all times shall fully protect, defend, indemnify, and hold PUSD harmless from and against all such liens and/or claims.

17. Defaults and Remedies: In the event of any material default under this Agreement and failure by the breaching Party to cure said default with thirty (30) days after written notice made in

accordance with this Agreement, the non-breaching Party may elect to terminate this Agreement upon ten (10) days' written notice and may pursue any applicable judicial or non-judicial remedies for such breach.

18. Indemnification: To the fullest extent permitted by law, Tenant shall defend, indemnify, and hold harmless Landlord and its officers, agents, and employees, from and against any and all claims, liabilities, losses, damage, cost, and expense, including but not limited to reasonable attorneys' fees and/or litigation expenses arising out of or resulting from Tenant's use, occupancy, and/or maintenance of and/or presence at the Lease Premises, or any accident, injury, or damage whatsoever occurring in, at, or upon the Leased Premises allegedly caused in whole or part by any act or omission of Tenant or anyone directly or indirectly employed by Tenant, its agents or invitees, or anyone for whose acts Tenant may (or is alleged to) be liable- in whole or in part – regardless of whether such is (or is alleged to have been) caused in part by the negligent or otherwise tortious act or omission of Landlord or any of Landlord's officers, agents, employees, or invitees.

19. Written Modifications: This agreement may be changed, waived, or terminated only an instrument in writing signed by the Party against which enforcement of such change, waiver, or termination is sought. The Parties expressly agree as a material term and condition of this Agreement that it is subject to Arizona's Statute of Frauds, such that no revisions will be enforceable if not memorialized in writing.

20. Waiver: No waiver of any provision of this Agreement shall be deemed, or shall otherwise constitute, a waiver of any other provision. The waiver of any the terms and conditions of this Agreement shall be limited to the particular instance involved and shall not continue or have any prospective effect or application unless unequivocally specified to the contrary in writing.

21. Relationship: The relationship created by this Agreement is that of Landlord and Tenant and no other, it being understood that the Tenant is not a partner, joint venturer, associate, agent, contractor, principle, or servant of Landlord. Insofar as Tenant's rights and remedies are concerned, there are no third-party beneficiaries who are intended to be included under the Agreement, such that only Tenant may enforce any right and/or remedies again Landlord with respect to this Agreement. There are intended third-party beneficiaries who may enforce applicable rights and remedies again Tenant hereunder; however, such third-party beneficiaries are reference by category or description in the Agreement, including, without limitation, in paragraphs 11 and 18 herein.

22. Rent: GEST will pay a monthly rent of $500.00, payable on the first business day of each month, during the initial one-year term. After the initial one-year term and/or upon any renewal of the lease term, the monthly rent will be subject to review by PUSD's Governing Board for possible increase.

23. Entire Agreement: This Agreement sets forth all the covenants, terms, promises, agreements, conditions, and understandings between PUSD and GEST concerning the Leased Premises, and there are no covenants, terms, promises, agreements, conditions, or understandings, either oral or written, between PUSD and GEST, other than as set forth in this Agreement. No representative have been made by any person to, or relied upon by, either of the Parties – or anyone acting for or on behalf of either of the Parties – which are not fully and completely set forth herein. Except as otherwise provided in this Agreement, no subsequent alternation, amendment, change, or addition to this Agreement shall be binding upon PUSD or GEST unless reduced to writing and signed by the Party or Parties to be charged therewith.

24. Notices and Approvals: All notices, demands, or elections of whatsoever sort which this Agreement requires or permits either Party to give to the other shall be in writing and shall be personally

delivered by commercial courier service or shall be delivered by registered or certified mail, return receipt requested, postage prepaid, and addressed to the respective Parties as follows:

Landlord: **Tenant**:

Either of the Parties may designate to the other in writing given in accordance with this paragraph a different address for service of notice. Notice registered or certified mail shall be deemed served and received upon the date of actual receipt by the recipient or three (3) days after mailing – whichever is sooner. Any approvals required or permitted pursuant to this Agreement on the part of PUSD may be made in writing by the superintendent or an associate or assistant superintendent of PUSD.

25. Governing Law and Attorneys' Fees: This Agreement shall be governed by and construed in accordance with the laws of the State of Arizona. Should a claim in arbitration or a lawsuit be brought by Landlord or Tenant to enforce or to recover on any of the terms and conditions contained in this Agreement, the substantially prevailing Party therein shall be entitled to recover reasonable attorneys' fees and cost. Tenant shall be responsible at its own cost and expense to ensure compliance with all applicable laws and governmental requirements (including the Americans with Disabilities Act, analogous state law(s), and applicable environmental laws and regulations) regarding the use, operation, and maintenance of the Leased Premises.

26. Certificate of Insurance as a Condition Precedent: The Agreement become effective only after delivery of any and all proper certificate(s) of insurance to (and actual receipt by) PUSD, such that the receipt thereof by PUSD is a condition precedent to GEST's rights under this Agreement.

27. Severability: Should any provision of this Agreement be declared contrary to law by any court, or if such a danger arises, the provisions shall have the effect in the law only to extent permitted by law, but all other provisions shall continue in full force and effect. The Parties shall thereupon immediately open negotiations for the purpose of arriving at a mutually replacement for such provision.

28. Arbitration and Litigation: Except as otherwise set forth herein, the Parties agree to submit any dispute arising hereunder to single arbitrator, who shall be chosen by mutual agreement. The decision of the arbitrator shall be binding and non-appealable and shall be fully enforceable as and/or may be reduced to a judgement in, any court(s) of competent jurisdiction. Notwithstanding the foregoing, nothing in this paragraph shall preclude Landlord from filing and prosecuting to judgement nay action seeking possession of the Lease Premises by means of an action sounding in forcible entry and/or retainer under applicable law, including a corresponding award of any unpaid amounts due and owing under this Agreement.

29. Security, Firearms and Weapons: To the extent Tenant finds it beneficial or necessary to provide security for its users, occupants, and/or other invitees, Tenant shall provide all security services needed to preserve and secure the Leased Premises and ensure the safety of its employees, representatives, users, occupants and invitees during Tenant's use and occupancy thereof during the term of this Agreement. Landlord will not provide any security services, and it is understood and agreed that the sole obligation for any security and/or safety relating to the Leased Premises and the use thereof by Tenant and its employees, representatives, users, occupants, and invitees will rest solely with Tenant, who knowingly and voluntarily assumes all corresponding risks of harm, loss, and/or injury. Thus, Landlord shall not be responsible for any break-ins, injuries, vandalism, theft and/or other crime or tort harming Tenant or its employees, representatives, users, occupants, and/or other invitees during the term of the Agreement – whether occurring directly to Tenant or to a third party. Nothing in this Agreement shall require Tenant to provide a prescribed level or type of security, rather, this Agreement allocates the

responsibility and risk to Tenant (rather than Landlord) if any break-ins, injuries, vandalism, and/or theft occur(s) at or in the Leased Premises. Tenant also agrees to ensure that any doors and windows providing entry point to the Leased Premises are kept locked and secured when the Leased Premises are not in use, unless otherwise agreed in writing by PUSD. Tenant agrees and acknowledges that all firearms and any weapons of any kind are barred from the Leased Premises, and Tenant shall ensure that no person – including, without limitations, any employees, contractors, vendors, representatives, and/or other invitees – brings or possesses any firearms or weapons in or upon the Leased Premises at any time for any reason. It is agreed that any breach by Tenant of this section of the Lease shall be deemed as a matter of law to be material breach – and not a *de minimus*, minor, or non-material breach.

30. Expenses Incident to Lease: It is understood and agreed upon that one of the material terms and conditions of this Agreement is that PUSD shall not have or be responsible for any expenses or expenditures in connection with GEST's use, maintenance, and/or occupancy of the Leased Premises (the "Expenses"). Thus, if PUSD's Governing Board determines that any such Expenses are not adequately addressed by this Agreement, PUSD shall have the ability to revision such amounts with GEST. If GEST does not agree to the necessary adjustments to rents and/or the payment of funds necessary to offset certain Expenses, then PUSD may terminate any remaining lease term at the end of the then-existing calendar year – or within ninety (90) days – whichever is later.

31. Immigration Law Compliance: As required by A.R.S. § 41-4401, each Party hereby warrants its compliance with all federal immigration laws and regulations that relate to its employees and A.R.S. § 23-214(A). Each Party further warrants that after hiring an employee, it verifies the employment eligibility of the employee through the e-verify program. If either Party uses any subcontractors in performance of this Agreement, subcontractors shall warrant their compliance with all federal immigration laws and regulations that relate to its employees and A.R.S. § 23-214(A), and subcontractors shall further warrant that after hiring an employee, such subcontractor verifies the employment eligibility of the employee through the e-verify program. A breach of this warranty shall be deemed a material breach of this Agreement subject to penalties up to and including termination of this Agreement. Each Party retains the legal right to inspect the papers of the other Party and its subcontractors engaged in performance of this Agreement to ensure that the other Party and its subcontractors are complying with the warranty. Any inspection will be conducted after reasonable notice and at reasonable times. If state law is amended, the Parties may modify this paragraph consistent with state law.

32. Cancellation for Conflict of Interest: This Agreement is subject to cancellation for conflict of interest as provided in A.R.S. § 38-511, which is hereby fully incorporated herein by this reference as if the same is fully set forth in this Agreement.

DocuSign Envelope ID: 319ED952-D12F-42F7-B01D-22EBE88D588D

In Witness whereof, the Parties hereto have executed Agreement the day and year stated next to their signature.

Landlord:

Payson Unified School District

By: Linda G

Its: Superintendent, Linda Gibson

Date: 8·13·20

Tenant:

Gila County on Behalf of Gila Employment and Special Training

By: _____

Its: Chairman, Woody Cline

Date: _____

The attorneys for each of the parties has determined that the foregoing Agreement is in proper form and is within the powers and authority granted under the laws of the State of Arizona to the party represented by such attorney.

APPROVED AS TO FORM:

DocuSigned by:
Dave Pauole
CD9DDF8DE6104E8...

By the Landlord Attorney: David Pauole

_____

The Gila County Attorney's Office

ATTEST

_____

Marian Sheppard, Clerk of the Board of Supervisors

ARF-6267 **Regular Agenda Item 4. I.**

Regular BOS Meeting

Meeting Date: 10/06/2020
Submitted For: Mary Springer, Finance Director
Submitted By: Mary Springer, Finance Director
Department: Finance

Information

Request/Subject

Request the Board of Supervisors certifies the collections for the Superior Court for FY 2019-2020.

Background Information

Per A.R.S. 41-2421 (G), each year the Board of Supervisors must certify the annual collections for the Superior Court, Payson Regional Justice Court, and Globe Regional Justice Court for Fiscal Year 2019-2020. Superior Court - The amount to be certified is $603,243.38. Payson Regional Justice Court - Amount to be certified is $625,993.17. Globe Regional Justice Court - The amount to be certified is $648,558.11.

Evaluation

The Gila County Treasurer's Office has prepared the collection report for FY 2019-2020 for the Board of Supervisors' certification.

Conclusion

Request the Board of Supervisors to certify the collection amounts for FY2019-2020 for the Superior Court, Payson Regional Justice Court, and Globe Regional Justice Court as presented.

Recommendation

Staff recommends certification.

Suggested Motion

Information/Discussion/Action to certify the collection amounts for the Superior Court, Payson Regional Justice Court, and Globe Regional Justice Court as presented for FY 2019-2020. **(Mary Springer)**

Attachments

Martha Gonzales
Chief Deputy
Ext. 8701

Debora Savage
Tax Collector
Ext. 8700

Debora Savage
GILA COUNTY TREASURER
P.O. BOX 1093
Globe, Arizona 85502

TO: Mary Springer , Finance Director

FROM: Tiffiney R. Tarango

DATE: September 14, 2020

RE: FILL THE CAP, A.R.S. 41-2421(G)

From the reports turned into the Treasurer's Office by the Superior Court, Globe Regional and the Payson Regional, I have totaled the annual collections. The following information is provided to the Board of Supervisors for Certification.

Division	Fiscal Year 19-20 Annual Collection	Fiscal Year 97-98 Base Year Amount
Superior Court	$603,243.38	$875,341.00
Payson Regional	$625,993.17	$572,148.00
Globe Regional	$648,558.11	$561,224.00
TOTAL	1,877,794.66	$2,008,713.00

With the annual collection not exceeding the base year amount, once certified by the Board of Supervisors the 5% set aside monies $ 91,268.60 will be distributed back to the original allocation recipient proportionately to their percent of the total collections.

Thank you,

Tiffiney R. Tarango
Accountant Analyst
Gila County Treasurer

5% RECAP FOR TREASURER JOURNAL FISCAL YEAR 2019-2020							
	SUP.COURT	GLOBE JP	PAYSON JP	TOTALS	RATES	5% EXCESS	STATE
T-801-2061	2,197.74	209.47	228.70	2,635.91	0.029	0.00	2,635.91
T-802-2061	1,927.71			1,927.71	0.021	0.00	1,927.71
T-810-1061	177.38			177.38	0.002	0.00	177.38
T-811-2061	31.77			31.77	0.000	0.00	31.77
T-812-2061	1,563.72	4,468.22	3,503.80	9,535.74	0.104	0.00	9,535.74
T-813-2061	431.34	1,297.12	1,047.68	2,776.14	0.030	0.00	2,776.14
T-814-2061	94.10			94.10	0.001	0.00	94.10
T-818-2061				0.00	0.000	0.00	0.00
T-818-2061				0.00	0.000	0.00	0.00
T-833-2061	2.65	1.50	4.25	8.40	0.000	0.00	8.40
T-840-2061				0.00	0.000	0.00	0.00
T-840-2061		241.17	263.24	504.41	0.006	0.00	504.41
T-847-2061	55.53	442.15	625.56	1,123.24	0.012	0.00	1,123.24
T-848-2061	36.00	28.13	30.67	94.80	0.001	0.00	94.80
T-849-2061	3.58			3.58	0.000	0.00	3.58
T-850-2061	287.82			287.82	0.003	0.00	287.82
T-855-2061		26.99	17.20	44.19	0.000	0.00	44.19
T-857-2061	26.18			26.18	0.000	0.00	26.18
T-870-2061	221.81	677.05	557.88	1,456.74	0.016	0.00	1,456.74
T-871-2061	0.01	2,227.44	2,470.98	4,698.43	0.051	0.00	4,698.43
T-872-2061	176.06	562.49	491.99	1,230.54	0.013	0.00	1,230.54
T-874-2061	127.37	89.10	91.62	308.09	0.003	0.00	308.09
T-875-2061	882.49			882.49	0.010	0.00	882.49
T-883-2061			342.32	342.32	0.004	0.00	342.32
T-884-2061	24.77	80.93	22.12	127.82	0.001	0.00	127.82
T-889-2061	70.50	125.03		195.53	0.002	0.00	195.53
T-895-2061	9.27	23.83		33.10	0.000	0.00	33.10
T-901-2061				0.00	0.000	0.00	0.00
T-902-2061	329.60			329.60	0.004	0.00	329.60
T-908-2061	715.36	1,810.73		2,526.09	0.028	0.00	2,526.09
T-912-2061	81.15		941.99	1,023.14	0.011	0.00	1,023.14
T-915-2061		5.00		5.00	0.000	0.00	5.00
T-916-2061			26.50	26.50	0.000	0.00	26.50
T-917-2061				0.00	0.000	0.00	0.00
T-930-2061	21.78	832.42	984.24	1,838.44	0.020	0.00	1,838.44
T-931-2061		104.12	123.05	227.17	0.002	0.00	227.17
T-932-2061	1.75	31.99	1.07	34.81	0.000	0.00	34.81
T-933-2061	8.94	58.92	55.07	122.93	0.001	0.00	122.93
T-934-2061	0.20	284.92	425.68	710.80	0.008	0.00	710.80
T-935-2061			0.21	0.21	0.000	0.00	0.21
T-936-2061		3.63	7.66	11.29	0.000	0.00	11.29
T-937-2061				0.00	0.000	0.00	0.00
T-940-2061		8.77		8.77	0.000	0.00	8.77
T-941-2061				0.00	0.000	0.00	0.00
T-942-2061		0.09		0.09	0.000	0.00	0.09
T-943-2061		4.35		4.35	0.000	0.00	4.35
T-944-2061				0.00	0.000	0.00	0.00
T-945-2061				0.00	0.000	0.00	0.00
T-946-2061		0.74		0.74	0.000	0.00	0.74
T-947-2061				0.00	0.000	0.00	0.00
T-948-2061				0.00	0.000	0.00	0.00
T-950-2061			2.34	2.34	0.000	0.00	2.34
T-951-2061				0.00	0.000	0.00	0.00
T-953-2061		5.76		5.76	0.000	0.00	5.76
T-954-2061	0.27	266.08	372.97	639.32	0.007	0.00	639.32
T-957-2061	0.93	219.54	242.69	463.16	0.005	0.00	463.16
T-958-2061				0.00	0.000	0.00	0.00
T-959-2061				0.00	0.000	0.00	0.00
T-961-2061				0.00	0.000	0.00	0.00
T-962-2061				0.00	0.000	0.00	0.00
T-963-2061		294.88	469.60	764.48	0.008	0.00	764.48
1005.201.142.3900.98				0.00	0.000	0.00	0.00
1005.302.3360.85	2.72			2.72	0.000	0.00	2.72

1005.302.3400.14	5,496.47			5,496.47	0.060	0.00	5,496.47
1005.302.3510.10	3,722.73			3,722.73	0.041	0.00	3,722.73
1005.302.3800.30	1.32		1.18	2.50	0.000	0.00	2.50
1005.311.3400.10		89.86		89.86	0.001	0.00	89.86
1005.311.3400.15		830.86		830.86	0.009	0.00	830.86
1005.311.3360.85				0.00	0.000	0.00	0.00
1005.311.3800.30		4.31		4.31	0.000	0.00	4.31
1005.311.3510.10		10,447.97		10,447.97	0.114	0.00	10,447.97
1005.311.3400.17		1,436.90		1,436.90	0.016	0.00	1,436.90
1005.314.3400.15			867.85	867.85	0.010	0.00	867.85
1005.314.3400.17			12.50	12.50	0.000	0.00	12.50
1005.314.3400.90			4,950.00	4,950.00	0.054	0.00	4,950.00
1005.314.3400.99			126.19	126.19	0.001	0.00	126.19
1005.314.3510.10			7,576.48	7,576.48	0.083	0.00	7,576.48
1005.345.3300.00				0.00	0.000	0.00	0.00
1005.345.3350.00				0.00	0.000	0.00	0.00
1005.300.340.3405.20				0.00	0.000	0.00	0.00
1005.300.340.3405.22				0.00	0.000	0.00	0.00
1005.300.340.3510.10		140.89		140.89	0.002	0.00	140.89
1005.300.442.3405.40				0.00	0.000	0.00	0.00
1005.300.340.3400.15				0.00	0.000	0.00	0.00
1005.336.3405.34	148.20			148.20	0.002	0.00	148.20
3544.301.3360.50				0.00	0.000	0.00	0.00
3544.301.3400.11		9.00		9.00	0.000	0.00	9.00
3544.301.3400.99				0.00	0.000	0.00	0.00
3545.301.3400.11		107.47		107.47	0.001	0.00	107.47
3545.301.3360.50				0.00	0.000	0.00	0.00
3547.301.3400.11				0.00	0.000	0.00	0.00
4042.335.3400.99	85.34			85.34	0.001	0.00	85.34
4042.335.3405.30	8,715.59	252.42	3.75	8,971.76	0.098	0.00	8,971.76
4042.335.3405.31	40.29			40.29	0.000	0.00	40.29
4146.335.3400.99	19.56			19.56	0.000	0.00	19.56
4146.335.3510.99	291.60			291.60	0.003	0.00	291.60
4147.335.3400.99	92.64			92.64	0.001	0.00	92.64
4147.335.3405.33	265.09			265.09	0.003	0.00	265.09
4501.337.3400.14	1,544.93			1,544.93	0.017	0.00	1,544.93
4502.303.3400.14	864.44			864.44	0.009	0.00	864.44
4542.333.3400.13	3.00			3.00	0.000	0.00	3.00
4559.333.3400.14	154.33			154.33	0.002	0.00	154.33
4566.333.3400.14	86.93			86.93	0.001	0.00	86.93
4574.333.3400.16				0.00	0.000	0.00	0.00
4578.333.3400.14	159.73			159.73	0.002	0.00	159.73
4741.314.3400.15			101.85	101.85	0.001	0.00	101.85
4840.302.3400.16				0.00	0.000	0.00	0.00
4841.302.3400.14	159.73			159.73	0.002	0.00	159.73
4842.302.3400.14	701.77			701.77	0.008	0.00	701.77
4844.302.3400.14	64.61			64.61	0.001	0.00	64.61
4846.302.3400.14	756.57			756.57	0.008	0.00	756.57
TOTALS	**32,885.37**	**27,752.24**	**26,990.88**	**87,628.49**	0.960	**0.00**	**87,628.49**

	SUP.COURT	GLOBE JP	PAYSON JP	TOTALS	RATES	5%EXCESS	STATE
ZCPRF		192.92	71.57	264.49	0.003	0.00	264.49
D&G ZDECJ		177.90	327.73	505.63	0.006	0.00	505.63
DSPLYCP				0.00	0.000	0.00	0.00
SUSP.FEE				0.00	0.000	0.00	0.00
BAD CKS				0.00	0.000	0.00	0.00
ZGF G&F		7.69	125.45	133.14	0.001	0.00	133.14
ZCPRF				0.00	0.000	0.00	0.00
ZDGEF				0.00	0.000	0.00	0.00
ZGFDU		422.40		422.40	0.005	0.00	422.40
ZDECJ				0.00	0.000	0.00	0.00
ZDRUG				0.00	0.000	0.00	0.00
ZDUIA			54.95	54.95	0.001	0.00	54.95
HURF				0.00	0.000	0.00	0.00
ZSHWY				0.00	0.000	0.00	0.00
ZSHWZ				0.00	0.000	0.00	0.00
REG.CONT.				0.00	0.000	0.00	0.00
HWY ZONE				0.00	0.000	0.00	0.00
ZFAR1				0.00	0.000	0.00	0.00
ZFAR2				0.00	0.000	0.00	0.00
HURFDPS				0.00	0.000	0.00	0.00
HURFCP				0.00	0.000	0.00	0.00
ZHRF1/ZHRF3			25.77	25.77	0.000	0.00	25.77
ZHRFC				0.00	0.000	0.00	0.00
ZHRF2				0.00	0.000	0.00	0.00
ZHRFD			3.08	3.08	0.000	0.00	3.08
ZSLPA				0.00	0.000	0.00	0.00
ZSLPC		1.09		1.09	0.000	0.00	1.09
ZSLPS			47.17	47.17	0.001	0.00	47.17
ZSLPD		13.39	20.87	34.26	0.000	0.00	34.26
ZPCOF			630.34	630.34	0.007	0.00	630.34
ZSTAT		0.48		0.48	0.000	0.00	0.48
ZSLPT				0.00	0.000	0.00	0.00
ZPSEF		1,397.03		1,397.03	0.015	0.00	1,397.03
ZHRFS				0.00	0.000	0.00	0.00
ZSPBF(SPE)				0.00	0.000	0.00	0.00
ZSPCE(SPECES)		0.05		0.05	0.000	0.00	0.05
ZBAD				0.00	0.000	0.00	0.00
ZSLMP				0.00	0.000	0.00	0.00
ZOVF				0.00	0.000	0.00	0.00
ZDVSF		82.64	19.78	102.42	0.001	0.00	102.42
ZADPS				0.00	0.000	0.00	0.00
ZNAP				0.00	0.000	0.00	0.00
ZCECF				0.00	0.000	0.00	0.00
ZSOMF			3.75	3.75	0.000	0.00	3.75
ZRCA				0.00	0.000	0.00	0.00
ZROA				0.00	0.000	0.00	0.00
DARE SO/ZDASO		14.06		14.06	0.000	0.00	14.06
TOTALS	**0.00**	**2,309.65**	**1,330.46**	**3,640.11**	0.040	0.00	3,640.11
GD. TOTALS	**32,885.37**	**30,061.89**	**28,321.34**	**91,268.60**	1.000		**91,268.60**

GLOBE JUSTICE COURT	5% SET ASIDE		FISCAL YEAR 20	2019-2020										
	Jul-19	Aug-19	Sep-19	Oct-19	Nov-19	Dec-19	Jan-20	Feb-20	Feb-20	Mar-20	Apr-20	May-20	Jun-20	TOTALS
0801000-2061	17.00	16.84	18.89	19.72	17.67	22.87	20.34	14.35		17.98	5.48	22.94	15.39	209.47
0812000-2061	362.48	308.89	370.05	325.68	249.84	317.26	351.10	355.70	7.32	529.32	424.19	368.37	498.02	4,468.22
0813000-2061	104.32	89.48	107.37	95.18	72.94	92.85	101.60	103.76	2.03	152.99	123.87	106.52	144.21	1,297.12
0814000-2061														0.00
0833000-2061							0.75						0.75	1.50
0840000-2061-13%														0.00
0840000-2061	19.56	19.38	21.75	22.71	20.34	26.33	23.43	16.52		20.71	6.31	26.41	17.72	241.17
0847000-2061	40.05	34.10	38.15	35.73	29.38	32.76	34.72	41.35		38.73	35.14	33.10	48.94	442.15
0848000-2061	2.28	2.26	2.54	2.65	2.37	3.07	2.73	1.93		2.41	0.74	3.08	2.07	28.13
0855000-2061				3.58	1.67	9.28	0.90	1.10		1.28	1.60	5.72	1.86	26.99
0870000-2061	54.12	45.29	53.55	49.07	38.79	48.89	53.87	53.52	1.09	79.99	65.85	56.37	78.65	677.05
0871000-2061	204.10	170.32	175.43	164.70	133.84	153.54	184.59	208.64		234.91	186.10	165.31	247.96	2,227.44
0872000-2061	42.82	41.01	48.47	40.39	31.60	40.09	43.64	45.73	0.98	62.67	55.52	44.89	64.68	562.49
0874000-2061	7.24	7.17	8.04	8.40	7.52	9.73	8.66	6.11		7.66	2.33	9.69	6.55	89.10
0884000-2061	6.79	9.00	9.17	9.50	2.58	6.25	8.08	5.98		8.96	3.35	7.49	3.78	80.93
0888000-2061														0.00
0889000-2061	25.00		7.47	17.13		18.87	7.33	23.98		12.74	12.48	0.03		125.03
0895000-2061							23.83							23.83
0901000-2061														0.00
0908000-2061	190.29	106.42	106.81	95.23	102.07	102.94	161.37	102.02		231.06	241.43	218.84	152.25	1,810.73
0912000-2061														0.00
0915000-2061	4.25	0.75												5.00
0930000-2061	75.61	64.80	67.25	62.96	51.65	60.44	70.23	78.22		81.85	65.66	80.47	93.28	832.42
0931000-2061	9.46	8.10	8.41	7.88	6.46	7.56	8.78	9.79		10.24	8.21	7.56	11.67	104.12
0932000-2061	2.04	1.55	2.64	1.44	2.57	2.20	2.59		3.61	3.81	2.84	2.37	4.33	31.99
0933000-2061	6.74	5.77	5.06	5.00	2.71	5.80	2.42		4.76	6.11	5.04	2.92	6.59	58.92
0934000-2061	27.18	23.70	23.39	22.85	19.53	20.18	11.85		28.22	28.40	22.80	24.13	32.69	284.92
0935000-2061														0.00
0936000-2061	1.20	0.20	0.26	0.29	0.46	0.20				0.22			0.80	3.63
0937000-2061														0.00
0938000-2061														0.00
0939000-2061														0.00
0940000-2061	0.40	0.37	0.60	0.60	0.21	0.43	0.84		1.40	1.00	1.42	0.49	1.01	8.77
0941000-2061														0.00
0942000-2061		0.09												0.09
0943000-2061	0.20	0.40	0.47	0.65	0.07	0.67	0.04		0.45	0.45	0.17	0.08	0.50	4.35
0944000-2061														0.00
0945000-2061														0.00
0946000-2061	0.04	0.24		0.14	0.04	0.10			0.06	0.03	0.03	0.03	0.03	0.74
0947000-2061														0.00
0953000-2061	0.03	0.08	1.21	0.54	0.26	0.43	0.38		0.61	0.72	0.47	0.23	0.80	5.76
0954000-2061	24.10	20.52	22.95	21.51	17.67	19.72	20.89	24.89		23.31	21.15	19.92	29.45	286.08
0957000-2061	24.10	20.52	22.95	21.51	12.53	14.48	15.99	17.95		18.42	15.26	14.30	21.53	219.54
0958000-2061														0.00
0959000-2061														0.00
0962000-2061														0.00
0963000-2061	26.51	23.16	25.44	23.73	19.94	22.52	23.50	27.52		25.56	23.41	21.99	31.60	294.88
1005.300.340.3400.15														0.00
1005.300.340.3510.10	8.10	9.43		6.43	5.91	13.37	2.90		19.43	27.63	16.94	9.46	21.29	140.89
1005.300.442.3405.40														0.00
1005.311.3360.85														0.00
1005.311.3400.10	4.38	7.35	7.73	11.90	4.98	10.63	5.81	4.77		16.00	5.59	5.42	5.50	89.86
1005.311.3400.15	42.86	82.26	74.36	77.66	69.56	90.04	80.11	56.49			21.67	90.30	60.59	725.80
1005.311.3400.15	24.07	4.03	6.15											34.25
1005.311.3400.15										70.81				70.81
1005.311.3400.17	67.04	120.53	141.85	135.63	132.91	103.20	89.00	91.97		148.69	94.92	157.95	153.41	1,436.90
1005.311.3510.10	219.78	216.00	101.26	210.47	130.47	132.81	153.70	115.00		120.00	75.00	100.00	85.00	1,658.49
1005.311.3510.10	746.73	654.21	718.31	649.80	523.81	641.24	712.38	708.09		987.06	832.19	753.13	816.47	8,743.42
1005.311.3510.10		5.17	7.37	3.17	2.96	3.05	4.20	7.10		5.60	2.78	0.98	3.70	46.06
1005.311.3800.30	0.36	0.48	0.49	0.50	0.14	0.33	0.43	0.32		0.48	0.18	0.40	0.20	4.31
1005.345.3300.00														0.00
1005.345.3350.00														0.00
3544.301.3360.50														0.00
3544.301.3400.11	5.65				3.36									9.00
3545.301.3400.11		14.18	12.49	12.30		5.21	6.89	14.28		14.62	14.18	6.35	7.07	107.47
3545.301.3360.50														0.00
4042.335.3405.30	19.82	21.13	30.10	17.56	16.04	18.11	12.49	13.82		13.67	23.54	53.77	12.37	252.42
4574.333.3400.16														0.00
4740.311.3400.15														0.00
ZCPRF	8.27	2.93	13.29	23.46	4.45	10.93	12.49	33.18		19.70	28.26	7.63	30.33	192.82
ZDECJ	10.49	0.40	37.50	6.35		8.54	5.09	4.31		20.25	2.90	20.93	61.14	177.90
ZDVSF	7.15	9.48	9.65	7.50	2.71	6.57	8.50	6.29		9.42	3.52	7.88	3.97	82.64
ZFAR1														0.00
ZFAR2														0.00
ZGF	0.93		0.56	0.78	0.87						1.37		3.20	7.69
ZGFDU	39.43	32.78	25.97	12.81	12.18	21.57	46.10	10.03		21.15	43.44	91.27	65.67	422.40
ZHRF1														0.00

ZHRF3														0.00
ZHRFD														0.00
ZADPS														0.00
ZRCA														0.00
ZSLPD	12.90	0.49												13.39
ZSPBF(SPE)														0.00
ZSPCE(SPECES)	0.05													0.05
ZPSEF	97.25	95.80	106.16	80.29	77.29	142.62	153.44	82.81		156.62	233.41	72.26	99.08	1,397.03
DARE SO / ZDASO		9.39	4.67											14.06
ZHRFC														0.00
ZSLMP														0.00
ZSLPC	0.66	0.43												1.09
ZDGEF														0.00
ZHRFS														0.00
ZROA														0.00
ZSLPS														0.00
ZOVF														0.00
ZSTAT	0.48													0.48
ZCECF														0.00
ZANP														0.00
ZDPP														0.00
TOTALS	2,594.31	2,285.88	2,446.03	2,315.36	1,832.34	2,247.88	2,477.78	2,285.52	69.96	3,233.13	2,728.64	2,600.96	2,944.10	30,061.89
RPTS	2,594.31	2,285.88	2,446.03	2,315.36	1,832.34	2,247.88	2,477.78	2,285.52	69.96	3,233.13	2,728.64	2,600.96	2,944.10	30,061.89
DIFF	0.00	0.00	0.00	0.00	0.00	0.00	0.00	0.00	0.00	0.00	0.00	0.00	0.00	0.00

PAYSON JUSTICE COURT 5% SET ASIDE FISCAL YEAR 20 YEAR 2019-2020

	Jul-19	Aug-19	Aug-19	Sep-19	Oct-19	Nov-19	Dec-19	Jan-20	Feb-20	Mar-20	Apr-20	May-20	Jun-20	TOTALS
0801000-2061	19.26	7.52	15.65	24.97	18.40	20.74	23.36	22.36	18.26	22.08	7.48	13.22	15.40	228.70
0812000-2061	308.18	176.34	128.63	283.53	250.87	206.68	250.72	381.19	309.15	299.08	297.75	256.40	356.28	3,503.80
0813000-2061	91.78	52.75	38.14	84.26	74.80	61.36	74.80	114.85	92.77	90.58	88.51	76.18	106.90	1,047.68
0818000-2061														0.00
0833000-2061						1.50	0.75			1.25			0.75	4.25
0840000-2061	22.16	8.66	18.01	26.74	21.18	23.87	26.89	25.74	21.02	25.41	8.61	15.22	17.73	263.24
0847000-2061	51.59	32.08	22.31	50.79	39.63	35.78	42.79	70.71	63.96	86.27	41.28	52.56	55.81	625.56
0848000-2061	2.58	1.01	2.10	3.35	2.47	2.78	3.13	3.00	2.45	2.96	1.00	1.77	2.07	30.67
0855000-2061						5.62		1.97				7.11	2.50	17.20
0870000-2061	49.41	28.40	18.68	41.15	40.26	33.03	40.26	61.81	49.93	48.75	47.64	41.01	57.55	557.88
0871000-2061	210.45	129.54	88.71	205.47	156.70	152.46	174.56	273.20	254.30	256.10	171.21	180.88	217.40	2,470.98
0872000-2061	42.61	24.43	19.72	43.24	34.67	28.52	34.65	53.05	43.15	41.95	41.00	35.41	49.59	491.99
0874000-2061	8.20	3.20	6.66	10.63	7.83	8.83	9.94	9.52	7.68	9.40	3.18		6.55	91.62
0883000-2061						107.85	124.30	110.17						342.32
0884000-2061	2.61	5.34				0.74	2.00	0.59	1.85	0.86	5.75		2.38	22.12
0889000-2061														0.00
0901000-2061														0.00
0912000-2061	46.53	61.04	2.50	69.86	112.60	85.90	105.60	45.25	117.45	55.05	76.68	119.05	44.48	941.99
0916000-2061	2.00	0.75	1.50	3.50	3.00	4.00	2.00		4.25	2.75	0.50	0.75	1.50	26.50
0930000-2061	85.03	51.93	35.37	82.01	62.18	60.33	69.09	109.60	100.47	101.93	68.31	71.77	86.22	984.24
0931000-2061	10.63	6.49	4.42	10.25	7.78	7.54	8.64	13.70	12.56	12.74	8.55	8.97	10.78	123.05
0932000-2061	0.08			0.03	0.23	0.03	0.12	0.18		0.40				1.07
0933000-2061	6.41	4.11	2.50	7.69	4.00	3.32	3.69	5.25	4.38	3.73	3.66	3.23	3.10	55.07
0934000-2061	35.26	21.32	14.38	32.03	25.59	26.01	30.16	48.82	45.47	46.38	30.39	31.13	38.74	425.68
0935000-2061	0.21													0.21
0936000-2061	0.53	0.54	0.52	1.18	0.78	0.37	0.29	0.53	0.22	0.34		1.45	0.91	7.66
0937000-2061														0.00
0942000-2061														0.00
0950000-2061	0.03		0.29	0.06	0.46	0.42	0.28	0.02	0.15	0.11	0.10	0.06	0.34	2.34
0951000-2061														0.00
0954000-2061	31.04	19.30	13.44	30.56	23.85	21.53	25.74	42.53	38.47	39.86	24.84	28.24	33.57	372.97
0957000-2061	21.11	12.87	8.67	20.24	15.53	14.68	16.97	27.12	24.71	25.24	16.91	17.51	21.13	242.69
0962000-2061														0.00
0963000-2061	36.02	21.73	15.10	35.70	27.45	24.89	29.99	49.11	86.00	45.90	28.64	31.00	38.07	489.60
1005.300.340.3405.40														0.00
1005.302.3800.30	0.14	0.28				0.04	0.11	0.03	0.10	0.05	0.30		0.13	1.18
1005.314.3400.15	52.59	20.23	91.60	98.32	72.44	81.66	91.99	88.03	71.90	86.94	29.45	52.05	60.65	887.85
1005.314.3400.17			6.25										6.25	12.50
1005.314.3400.90	560.00	260.00	245.00	420.00	424.20	290.80	505.00	455.00	350.00	435.00	255.00	255.00	495.00	4,950.00
1005.314.3400.99	39.98	63.13			3.75					10.85		8.48		126.19
1005.314.3510.10	656.12	423.25	264.99	706.02	567.39	423.73	511.88	794.34	682.76	632.28	643.81	559.58	710.35	7,576.48
1005.345.3300.00														0.00
3544.301.3400.11														0.00
4042.335.3405.30	1.25	1.25			1.25									3.75
4574.333.3400.16														0.00
4741.314.3400.15	8.58	3.35	6.97	11.12	8.19	9.24	10.40	9.96	8.13	9.83	3.33	5.89	6.88	101.85
X-563-4429														0.00
ZANP														0.00
ZCPRF	6.26	7.40	5.36	3.20	8.00				18.25	6.21	5.27	6.61	7.01	71.57
ZDECJ	25.60	17.21	0.75	10.93	19.24				19.93	65.78	13.01	18.08	137.20	327.73
ZDUIA					12.50				25.00		12.50		4.95	54.95
ZDVSF	2.75	5.63							1.85	0.90	6.05		2.50	19.78
G&F	0.51	10.87	3.66	4.33	10.65				8.26	12.43	10.00	41.57	23.17	125.45
ZHRF1/ZHRF3	5.35				8.08								12.34	25.77
ZHRFD													3.08	3.08
ZPCOF	96.39	25.75	25.95	38.45	78.70				88.00	86.20	97.85	75.25	19.80	630.34
ZRCA														0.00
ZSHWY														0.00
ZSHWZ														0.00
ZDRUG														0.00
ZSLPD	3.21	6.68							5.39		3.28		2.31	20.87
ZBAD														0.00
ZHRFS														0.00
ZSLPS	9.67	0.56	15.00							21.94				47.17
ZHRFC														0.00
ZSLPC														0.00
ZGFDU														0.00
ZHRF2														0.00
ZHURF-SH.														0.00
ZSLPA														0.00
ZHURFC														0.00
ZSOMF	1.25	1.25			1.25									3.75
ZHRFS														0.00
SUSP.FEE														0.00
HWY ZONE														0.00
TOTALS	2,553.36	1,516.19	1,092.83	2,361.61	2,143.92	1,744.25	2,220.10	2,817.63	2,576.32	2,567.51	2,051.84	2,015.43	2,660.35	28,321.34
RPTS	2,553.36	1,516.19	1,092.83	2,361.61	2,143.92	1,744.25	2,220.10	2,817.63	2,576.32	2,567.51	2,051.84	2,015.43	2,660.35	28,321.34
DIFF	0.00	0.00	0.00	0.00	0.00	0.00	0.00	0.00	0.00	0.00	0.00	0.00	0.00	0.00

T-895 5% SET A SIDE
CLERK OF THE COURTS

FISCAL YEAR 2019-2020

	Jul-19	Aug-19	Sep-19	Oct-19	Nov-19	Dec-19	Jan-20	Feb-20	Mar-20	Apr-20	May-20	Jun-20	TOTALS
0801000-2061	217.02	169.62	193.35	218.08	143.89	200.01	189.93	206.55	195.28	133.20	142.85	187.96	2,197.74
0802000-2061	175.13	149.32	170.92	192.70	127.34	175.65	167.14	182.38	176.25	117.84	126.26	166.78	1,927.71
0810000-2061		15.10	17.34	19.23	12.89	17.74	16.91	18.45	18.04	11.95	12.81	16.92	177.38
0811000-2061	0.74	3.68	3.20	0.06	1.17	0.03	1.43	0.67	9.07	1.82	1.47	8.43	31.77
0812000-2061	19.95	63.37	102.88	130.90	22.60	27.64	193.81	137.29	114.09	101.13	76.89	573.17	1,563.72
0813000-2061	5.51	17.50	28.42	35.18	6.22	8.08	53.60	37.72	31.41	27.87	21.30	158.53	431.34
0814000-2061	1.58	8.28	2.98	7.18	14.64	2.74	2.46	7.18	5.79	26.93	10.69	2.85	94.10
0818000-2061													0.00
0818000-2061													0.00
0833000-2061		0.76	0.02	0.02	0.02		1.03		0.01	0.01		0.78	2.65
0847000-2061	3.75	6.00	2.50	1.25	8.00	3.75	7.50	5.00	3.20	12.94	1.64		55.53
0848000-2061	3.26	2.79	3.21	3.55	2.38	3.27	3.11	3.40	3.34	2.21	2.36	3.12	36.00
0849000-2061	0.11	0.17	0.47	0.01	0.17		0.21	0.10	1.34	0.27	0.22	0.51	3.58
0850000-2061	1.49	1.56	55.74	32.19	1.25	2.99	8.47	1.74	95.28	37.82	19.98	29.31	287.82
0857000-2061	2.37	2.03	2.33	2.58	1.73	2.38	2.27	2.48	2.41	1.61	1.72	2.27	26.18
0870000-2061	2.76	9.21	15.19	13.18	3.16	4.16	28.69	19.46	16.28	13.32	11.28	85.14	221.81
0871000-2061												0.01	0.01
0872000-2061	1.67	8.52	12.16	10.70	2.69	3.48	21.12	18.15	10.64	9.42	5.78	71.73	176.06
0874000-2061	11.77	9.95	11.16	12.89	8.48	11.91	11.13	12.29	10.79	7.75	8.39	10.86	127.37
0875000-2061	80.63	68.25	76.48	90.83	60.60	81.50	76.30	84.16	73.87	53.10	59.69	76.88	882.49
0884000-2061		2.38		4.75	2.38					4.75	2.38	8.13	24.77
0889000-2061	1.25		12.50		4.94	7.56			12.50	0.40	18.85	12.50	70.50
0895000-2061						1.09	2.05	2.32	1.49			2.32	9.27
0902000-2061	29.33	30.08	27.00	43.58	22.58	25.50	34.58	37.30	21.75	16.50	17.25	24.15	329.60
0908000-2061	50.02	77.50	29.57		2.50	7.25	45.60	44.85	85.03	75.53	99.43	197.88	715.38
0912000-2061	0.64	0.64	0.64	0.64	1.27	1.27	1.27	1.27	1.27		8.42		17.33
0912000-2061	51.32										12.50		63.82
0912000-2061													0.00
0917000-2061													0.00
0930000-2061	1.43	2.31	1.85	0.81	1.21	1.47	2.43	2.01	1.88	2.65	0.78	2.95	21.78
0932000-2061		0.20	0.20			0.20	0.20	0.20			0.29	0.46	1.75
0933000-2061	0.71	0.95	0.73	0.40	0.60	0.54	0.97	0.65	0.94	1.33	0.10	1.02	8.94
0934000-2061							0.05	0.15					0.20
0937000-2065													0.00
0942000-2061													0.00
0954000-2061						0.19	0.02		0.01		0.02	0.03	0.27
0957000-2061		0.30	0.20			0.07	0.13	0.10	0.01	0.10	0.01	0.01	0.93
0961000-2061													0.00
1005.201.142.3900.98													0.00
1005.300.340.3405.20													0.00
1005.300.340.3405.22													0.00
1005.300.442.3405.40													0.00
1005.302.3360.85	0.18	0.29	0.23	0.10	0.15	0.18	0.30	0.25	0.24	0.33	0.10	0.37	2.72
1005.302.3400.14	387.07	400.04	377.84	402.46	264.99	372.67	1,623.23	424.34	542.22	205.56	212.72	283.53	5,496.47
1005.302.3400.14													0.00
1005.302.3510.10	47.07	137.97	239.36	275.03	58.20	75.33	424.77	370.07	246.65	359.88	181.82	1,306.58	3,722.73
1005.302.3800.30		0.13		0.25	0.13					0.25	0.13	0.43	1.32
1005.336.3405.34				13.75					7.70	25.09	48.46	53.20	148.20
1005.345.3300.00													0.00
1005.345.3300.00													0.00
3541.301.3510.11													0.00
3544.301.3400.99													0.00
3547.301.3400.11													0.00
4042.335.3400.99	1.17	15.04	0.51	1.82	0.21	0.01	0.01	7.12	23.14	11.68	20.36	4.27	85.34
4042.335.3405.30	744.95	803.42	531.27	617.13	453.83	543.06	534.90	693.87	838.85	1065.68	738.54	1,116.04	8,681.54
4042.335.3405.30								34.05					34.05
4042.335.3405.31	0.68	3.98	1.28	3.08	6.28	1.13	1.05	3.08	2.48	11.54	4.58	1.13	40.29
4146.335.3400.99									9.95	3.34	3.77		17.06
4146.335.3400.99			2.50										2.50
4146.335.3510.99	12.50	28.50	15.00	5.00	21.50	35.00	47.50	20.00	25.00	31.23	18.97	31.40	291.60
4147.335.3400.99						0.53	0.45	2.28	57.06	8.10	17.22	7.00	92.64
4147.335.3405.33	6.50	3.50	10.15	0.16	5.40	13.97	3.61	17.40	4.87	80.87	89.24	29.82	265.09
4501.337.3400.14	140.18	119.63	137.27	152.28	102.12	140.46	133.86	146.14	142.92	94.82	101.40	134.05	1,544.93
4502.303.3400.14	69.92	60.64	75.25	57.00	63.37	100.85	59.27	75.99	95.58	80.05	75.02	71.50	864.44
4542.333.3400.13		3.00											3.00
4559.333.3400.14	15.26	13.05	12.50	7.50	13.25	5.00	8.76	15.16	31.88	8.21	13.30	10.46	154.33
4566.333.3400.14	9.00	8.25	4.50	6.16	3.75	6.91	3.16	7.05	15.82	7.76	3.55	11.02	86.93
4574.333.3400.16													0.00
4578.333.3400.14	16.65	15.26	8.33	11.39	6.94	12.78	5.84	13.04	28.77	14.02	6.52	20.19	159.73
4840.302.3400.16													0.00
4841.302.3400.14	16.65	15.26	8.33	11.39	6.94	12.78	5.84	13.04	28.77	14.02	6.52	20.19	159.73
4842.302.3400.14	58.96	54.82	59.63	73.18	47.46	63.77	61.60	68.34	63.01	45.28	48.67	57.05	701.77
4844.302.3400.14	5.13	4.42	5.79	4.39	4.87	7.26	4.56	5.60	6.70	4.62	5.75	5.52	64.61
4846.302.3400.14	68.85	58.76	67.43	72.52	50.16	68.99	65.78	71.78	70.19	46.47	49.80	65.84	756.57
TOTALS	2,263.16	2,397.43	2,328.01	2,535.30	1,562.26	2,051.15	3,857.10	2,814.47	3,133.55	2,759.05	2,310.00	4,873.89	32,885.37
RPTS	2,263.16	2,397.43	2,328.01	2,535.30	1,562.26	2,051.15	3,857.10	2,814.47	3,133.55	2,759.05	2,310.00	4,873.89	32,885.37
DIFF	0.00	0.00	0.00	0.00	0.00	0.00	0.00	0.00	0.00	0.00	0.00	0.00	0.00

GLOBE BACKUP REPORTS

FISCAL YEAR 2019-2020

DATE	T-801	T-812	T-813	T-814	T-833	T-840	T-840	T-847	T-848	T-855	T-870	T-871	T-872	T-874	T-884	T-888	T-889	T-895	T-901
		CJEF				13%	JCEF												
New World / Tyler	0801000	0812000	0813000		0833000	0840000	0840000	0847000	0848000	0855000	0870000	0871000	0872000	0874000	0884000	0888000	0889000	0895000	0901000
Jul-19	322.88	6,886.94	1,981.94			1,239.35	371.84	760.94	43.30		1,028.09	3,877.92	813.35	137.41	128.90	1,587.95	476.00	2,594.31	
Aug-19	319.80	5,868.72	1,700.08			1,537.96	368.13	647.77	42.87	178.32	860.46	3,236.06	779.01	136.11	170.95	1,405.19		2,285.88	
Sep-19	358.74	7,030.82	2,040.02			1,320.43	413.06	724.79	48.08	88.61	1,017.28	3,333.16	920.61	152.68	174.12	1,572.48	141.83	2,446.03	
Oct-19	374.64	6,187.85	1,808.40			1,570.57	431.45	678.73	50.18	67.85	932.29	3,129.21	767.16	159.42	160.50	1,420.31	325.36	2,315.36	
Nov-19	335.54	4,746.94	1,385.79			1,204.91	386.41	558.03	45.00	31.58	736.82	2,542.78	600.10	142.83	48.97	1,125.47		1,832.34	
Dec-19	434.37	6,027.80	1,764.01			1,309.41	500.19	622.40	58.22	176.06	928.74	2,917.24	761.48	184.86	118.59	1,425.17	358.48	2,247.88	
Jan-20	386.42	6,670.89	1,930.22		14.25	1,578.38	445.03	659.58	51.78	17.02	1,023.35	3,507.03	828.98	164.44	153.49	1,562.35	138.17	2,453.95	
Jan-20		26.53	7.35								3.96		3.38			5.94		23.83	
Feb-20	272.47	6,758.29	1,971.40			1,450.99	313.80	785.52	36.50	20.79	1,016.87	3,926.10	868.76	115.95	113.54	1,530.06	455.57	2,285.52	
Feb-20		138.91	38.42								20.69		16.53			31.13		69.96	
Mar-20	341.62	10,057.06	2,906.79			2,180.01	393.30	735.71	45.79	24.32	1,519.80	4,463.24	1,190.54	145.39	170.13	2,339.76	242.06	3,233.13	
Apr-20	104.03	8,059.45	2,353.53			1,484.34	119.79	667.54	13.95	30.24	1,251.07	3,535.82	1,054.66	44.27	83.57	1,893.68	237.02	2,728.84	
May-20	435.67	6,998.87	2,023.87			985.77	501.70	628.90	58.40	108.68	1,070.92	3,140.75	852.79	183.98	142.13	1,635.60	0.47	2,600.96	
Jun-20	292.31	9,462.25	2,739.99		14.25	1,752.57	336.65	929.79	39.17	35.16	1,456.20	4,711.21	1,228.74	124.42	71.65	2,185.09		2,944.10	
TOTALS	3,978.49	84,921.32	24,651.81	0.00	28.50	17,614.68	4,581.15	8,399.70	533.24	778.63	12,866.54	42,320.52	10,688.09	1,691.76	1,536.54	19,700.19	2,374.96	30,061.89	0.00

DATE	1005000 300.340.3400.15	1005000 X-105-4264 300.340.3610.10	1005000 X-105-4651 300.442.3405.40	1005000 X-105- 311.3360.85	1005000 X-105-4450 311.3400.10	1005000 X-105-4815 311.3400.15	1005000 X-105-4861 311.3400.17	1005000 X-105-4831 311.3510.10	1005000 X105- 311.3800.30	1005000 311.3900.98	1005000 X-105-4429 345.3350.00	1005000 X-105-4429 345.3300.00	3544000 X-182-4620 301.3360.50	3544000 301.3400.11	3545000 X-183-4620 301.3380.50	3545000 301.3400.11	4042000 X-250-4835 335.3405.30	4574000 X-226-4574 333.3400.16	4740000 X-357 311.3400.15
Jul-19		153.83	1,293.81		83.09	1,422.76	1,273.59	18,363.42	6.78			140.12		1,535.95	107.16		376.33	1,023.96	667.33
Aug-19		179.06	1,085.64		139.46	1,409.15	2,290.06	16,563.72	8.99			1,452.22		1,161.74	269.28		401.13	774.48	822.76
Sep-19			1,464.66		146.87	1,697.71	2,691.25	15,711.83	9.15			2,019.94		1,258.17		237.17	571.78	838.78	710.99
Oct-19		122.01	1,434.59		225.92	1,651.17	2,578.94	16,405.06	9.50			2,156.58		1,318.91		233.82	333.53	879.27	845.66
Nov-19		112.20	1,015.61		94.51	1,478.76	2,525.13	12,487.51	2.58			1,521.24		1,424.92		63.46	304.67	949.94	646.91
Dec-19		253.96	1,231.01		201.91	1,914.32	1,960.76	14,764.72	6.24			2,006.30		1,160.16		98.90	343.84	773.44	705.09
Jan-20		55.07	1,249.39		106.49	1,703.06	1,690.94	16,534.95	8.07			2,188.91		1,367.09		130.82	237.15	911.39	849.88
Jan-20		88.84																	
Feb-20			1,277.49		90.44	1,200.88	1,747.41	15,773.46	5.97			1,715.72		1,638.17		271.14	282.50	1,092.10	781.28
Feb-20		369.00																	
Mar-20		524.92	1,851.62		304.00	1,505.33	2,825.05	21,140.41	8.94			2,367.85		1,243.58		275.73	259.51	829.04	1,173.83
Apr-20		321.69	1,168.53		106.14	458.53	1,803.29	17,289.23	3.35			1,699.68		877.19		269.34	446.99	584.79	799.25
May-20		179.60	1,432.57		102.85	1,918.83	3,000.93	16,227.54	7.48			1,814.94		1,435.35		120.51	1,021.48	956.89	530.78
Jun-20		474.62	881.60		104.50	1,288.13	2,914.65	17,127.77	3.77			2,387.83		1,001.58		134.33	234.87	667.72	943.69
TOTALS	0.00	2,834.80	15,386.52		1,706.18	17,649.63	27,300.00	198.389.42	80.82	0.00	0.00	21,471.33	0.00	15,422.81	376.44	1,635.02	4,793.56	10,281.80	9,477.47

	Jul-19	Aug-19	Sep-19	Oct-19	Nov-19	Dec-19	Jan-20	Feb-20	Mar-20	Apr-20	May-20	Jun-20	TOTALS
CHILD/PASS/RES.	157.06	55.66	252.60	445.74	84.45	207.75	237.35	630.35	374.23	499.02	144.93	578.29	3,665.43
DRUG/GANG - ZDECJ	199.27	7.48	712.50	120.72		162.17	96.69	81.86	384.74	55.01	397.71	1,161.64	3,379.79
DOMESTIV VIOLENCE - ZDVSF	135.67	179.95	183.26	142.50	51.56	124.86	161.56	119.53	179.07	66.94	149.62	75.43	1,569.95
D.P.P.D.T.F.-ZDPP													0.00
FARESPEC-ZFAR1	4,689.30	5,009.90	4,199.59	3,806.39	2,945.26	2,714.66	4,393.61	3,921.22	3,545.76	3,648.79	3,715.12	4,637.90	47,227.40
FAREDELQ-ZFAR2	2,510.23	3,311.33	1,907.09	1,977.01	1,770.19	1,538.28	1,714.87	1,945.46	3,688.64	2,015.46	1,831.52	2,808.54	27,016.82
FARE ENHANCE SPEC FEE ZFAR3				79.76	27.88	523.26	148.24	187.34	247.27	357.37	387.26	843.38	2,801.76
FARE ENHANCE ZFAR4			294.00	441.00	373.00	667.00	635.10	790.74	1,316.50	1,355.29	726.34	1,292.57	7,891.54
GAME&FISH - ZGF	17.61		10.66	14.42	16.55					26.03		60.86	146.13
EXTRA DUI ASSMT. - ZGFDU	749.00	622.80	493.46	243.40	231.48	409.75	875.87	190.66	401.77	825.43	1.734.08	1,247.74	8,025.44
RESTITUTION													0.00
HURF1													0.00
HURF3													0.00
HURF-DPS ZHRFD													0.00
ZRCA													0.00
SUSP/PLT/DPS/ZSLPD	244.95	9.16											254.11

T-908	T-912	T-915	T-930	T-931	T-932	T-933	T-934	T-935	T-936	T-940	T-942	T-943	T-945	T-946	T-947	T-953	T-954	T-957	T-958	T-959	T-962	T-963	TOTALS
0908000	0912000	0915000	0930000	0931000	0932000	0933000	0934000	0935000	0936000	0940000	0942000	0943000	0945000	0946000	0947000	0953000	0954000	0957000	958000	0959000	0962000	0963000	
3,615.32		80.75	1,436.49	179.59	38.58	127.99	516.25		22.80	7.57		3.60		0.63		0.54	457.81	341.94				503.67	29,563.65
2,021.90		14.25	1,231.16	153.90	29.40	109.50	450.26		3.80	7.02	1.69	7.58		4.43		1.50	389.74	284.38				440.04	24,687.85
2,029.38			1,277.69	159.73	50.01	98.02	444.30		4.93	11.32		8.85				22.97	436.05	294.56				483.22	27,101.77
1,809.27			1,196.15	149.54	27.18	94.88	434.03		5.32	11.36		12.23		2.53		10.18	408.51	280.25				450.70	25,291.39
1,939.30			981.21	122.62	48.69	51.31	370.92		8.73	3.83		1.25		0.63		4.91	335.71	237.98				378.83	20,209.43
1,955.79			1,148.31	143.57	41.70	110.14	383.41		3.80	8.16		16.45		1.90		8.05	374.54	275.05				427.78	24,733.55
3,065.94			1,334.34	166.82	49.10	45.88	225.09			15.91		0.62				7.22	396.87	303.73				446.35	27,844.20
					10.12	47.21	248.01		3.80	1.39		4.91				7.37							393.80
1,938.35			1,488.17	185.82													472.74	340.98				522.81	26,868.99
					68.42	90.41	536.12			28.42		8.39		1.14		11.56							1,060.10
4,389.95			1,555.09	194.46	72.29	115.96	539.42		4.18	18.93		8.44		0.38		13.68	442.79	349.92				485.62	38,179.78
4,587.05			1,247.47	155.89	53.88	95.60	433.18			26.86		3.20		0.38		8.85	401.81	289.87				444.70	31,390.32
4,157.89			1,148.92	143.64	44.99	55.34	458.39			9.28		1.51		0.38		4.21	378.42	271.70				417.62	28,461.73
2,892.61			1,772.15	221.61	82.13	125.14	620.98		15.20	19.13		9.48		0.38		15.10	559.39	408.88				600.21	35,665.94
34,402.75	0.00	95.00	15,815.15	1,977.19	616.49	1,165.36	5,660.34	0.00	72.56	167.16	1.69	86.71	0.00	12.78	0.00	116.14	5,054.38	3,679.24	0.00	0.00	0.00	5,601.55	341,252.50

TOTALS TREAS/REC.	TOTALS OF
26,448.13	56,011.78
26,557.69	51,245.54
27,358.10	54,459.87
28,192.78	53,484.17
22,627.44	42,836.87
25,420.65	50,154.20
27,033.21	54,677.41
88.84	482.84
25,856.56	52,725.55
369.00	1,429.10
34,309.81	72,489.59
25,828.00	57,218.32
28,750.73	57,212.46
28,164.86	63,830.80
327,005.80	668,258.30

668,

-

648,

ZHRFC													0.00
SUSP/PLATE/CP ZSLPC		8.13											8.13
ZHRFS													0.00
ZJCSF													0.00
DARE-SO / ZDASO		178.32											178.32
ZSPBF-(SPE)													0.00
ZSPCE(SPECES)	0.89												0.89
STATE HWY													0.00
ZCPRF													0.00
ZADPS													0.00
ZSLPC	12.46												12.46
ZRÖA													0.00
ZOVF													0.00
ZSLMP													0.00
ZPSEF	1,847.71	1,820.06	2,017.09	1,525.60	1,468.57	2,709.87	2,915.28	1,573.46	2,975.80	4,434.85	1,373.03	1,882.61	28,543.93
ZREIM 60%													0.00
ZANP													0.00
SUSP/PLATE/ZSLMP													0.00
ZSTAT	8.96												8.96
ZREIM 40%													0.00
TOTALS	10,573.11	11,202.79	10,070.25	8,796.54	6,968.94	9,057.50	11,178.57	9,440.62	13,113.78	13,284.19	10,459.61	14,584.96	128,730.86
REPORT TOTALS	10,573.11	11,202.79	10,070.25	8,796.54	6,968.94	9,057.50	11,178.57	9,440.62	13,113.78	13,284.19	10,459.61	14,584.96	128,730.86
DIFFERENCE	0.00	0.00	0.00	0.00	0.00	0.00	0.00	0.00	0.00	0.00	0.00	0.00	0.00

PAYSON JUSTICE COURT BACKUP REPORTS FISCAL YEAR 2019-2020

DATE	T-801	T-812	T-813	T-818	T-833	T-840	T-847	T-848	T-855	T-870	T-871	T-872	T-874	T-883	T-884	T-888	T-895	T-912	T-916	T-930
New World	0801000	0812000	0813000	0818000	0833000	0840000	0847000	0848000	0855	0870000	0871000	0872000	0874000	0883000	0884000	0888000	0895000	0912000	0916000	0930000
		CJEF				JCEF														
Jul-19	365.88	5,855.40	1,743.88	1,013.93		421.12	980.25	49.07		936.74	3,998.55	809.61	155.76		49.64	1,591.94	2,553.36	883.97	38.00	1,615.65
Aug-19	142.91	3,350.48	1,002.34	447.07		164.47	609.51	19.17		539.60	2,461.35	464.10	60.83		101.53	866.41	1,516.19	1,159.77	14.25	986.74
Aug-19	297.27	2,443.91	724.69	444.07		342.12	423.80	39.88		354.96	1,685.55	374.81	126.51			606.83	1,092.83	166.25	28.50	672.02
Sep-19	474.47	5,387.09	1,600.84	858.00		546.07	965.10	63.62	55.00	781.89	3,903.67	821.51	201.90	2,616.79		1,361.73	2,361.61	1,327.34	66.50	1,558.09
Oct-19	349.55	4,766.55	1,421.17	968.50	3,849.39	402.34	753.03	46.90	140.00	765.01	2,977.39	658.75	148.75	3,849.39		1,161.79	2,143.92	2,139.40	57.00	1,181.44
Nov-19	394.09	3,926.92	1,165.89	655.52	28.50	453.59	679.90	52.86	106.71	627.48	2,896.77	541.87	167.72	3,104.44	13.98	950.51	1,744.25	1,632.10	76.00	1,146.28
Dec-19	443.92	4,763.69	1,421.21	782.60	14.25	510.96	813.02	59.54	134.34	764.87	3,316.63	658.24	188.93	3,334.85	37.90	1,166.28	2,220.10	2,006.40	38.00	1,312.73
Jan-20	424.83	7,242.54	2,182.08	861.25		489.00	1,343.53	56.98	37.36	1,174.45	5,190.87	1,008.06	180.79	3,073.90	11.29	1,781.54	2,817.63	859.75	65.00	2,082.33
Feb-20	346.99	5,873.75	1,762.70	910.51		399.36	1,215.23	46.53	29.00	948.85	4,631.63	819.86	145.97	4,890.79	35.21	1,442.80	2,576.32	2,231.55	80.75	1,908.94
Mar-20	419.58	5,682.57	1,720.94	943.95	23.75	482.85	1,259.18	56.29	416.78	926.28	4,865.94	797.01	178.55	4,131.42	16.24	1,410.98	2,567.51	1,045.95	52.25	1,938.80
Apr-20	142.12	5,657.31	1,681.59	937.32		163.52	784.38	19.06	50.00	905.16	3,253.06	779.03	60.47	4,380.12	109.20	1,364.59	2,051.84	1,456.83	9.50	1,297.88
May-20	251.17	4,871.57	1,447.44	764.09		289.16	891.63	33.68	135.08	779.12	3,436.76	672.87	106.90	4,153.75		1,180.27	2,015.43	2,261.98	14.25	1,363.59
Jun-20	292.61	6,750.26	2,031.04	786.14	14.25	336.90	1,060.32	39.23	47.50	1,093.38	4,130.55	942.09	124.43	5,736.99	45.12	1,654.58	2,660.35	845.14	28.50	1,638.08
TOTALS	4,345.39	66,572.04	19,905.79	10,372.95	3,930.14	5,001.46	11,778.88	582.81	1,151.77	10,599.59	46,948.92	9,347.81	1,847.51	39,272.44	420.11	16,540.25	28,321.34	18,016.43	568.50	18,700.37

DATE	X-105-4609	X-105	X-105-	X-105-4383	X-105-4615	X-105-4861	X-105-4429	X-105-4886	X-105-4831	X-105-4429	X-182-4620	X-250-4042	X-226	X-360 ZJCL	x-360 ZJCLF	G.F.	GRAND
	1005000	1005000	1005000	1005000	1005000	1005000	1005000	1005000	1005000	1005000	3544000	4042000	4574000	4741000	4741000	TOTALS	TOTALS
New World	300.340.3405.40	302.3800.30	314.3400.00	314.3400.11	314.3400.15	314.3400.17	314.3400.90	314.3400.99	314.3510.10	345.3300.00	301.3400.11	335.3405.30	333.3400.16	314.3400.15	314.3400.15		
Jul-19	420.50	2.61		132.48	999.29		10,640.00	759.60	12,466.18		970.39	23.75	646.92	542.88	162.93	27,767.53	53,517.28
Aug-19	265.50	5.35		12.28	384.42		4,940.00	1,199.46	8,041.80		73.84	23.75	49.08		304.37	15,299.65	30,847.11
Aug-19	2,251.03			450.00	1,170.36		4,855.00		5,034.82					371.49		13,932.70	24,883.64
Sep-19	3,079.51			537.00	1,868.02		7,980.00		13,414.35					462.00	211.29	27,552.17	55,120.71
Oct-19	2,298.53			1,626.00	1,376.28		8,059.80	71.25	10,780.50			23.75		521.50	155.67	24,913.28	54,701.57
Nov-19	1,707.21	0.74		900.35	1,551.62		5,525.20		8,050.73					362.97	175.50	18,264.32	40,506.80
Dec-19	1,930.05	1.99		915.98	1,747.79		9,595.00		9,725.64					421.40	197.65	24,535.50	50,725.66
Dec-19														1,027.10		1,027.10	1,027.10
Jan-20	892.04	0.59		1,778.54	1,672.64		8,645.00		15,092.39					463.75	189.15	28,734.10	63,175.01
Feb-20	799.84	1.84		1,274.00	1,386.17		6,650.00		12,972.25					490.27	154.54	23,708.91	57,409.49
Feb-20															460.89	460.89	460.89
Mar-20	865.16	0.85		1,378.75	1,651.81		8,265.00	206.15	12,012.91					508.28	188.80	25,075.71	57,329.54
Apr-20	1,478.00	5.75		573.00	559.48		4,845.00		12,232.39					568.01		20,261.83	47,512.96
May-20	888.05				988.99		4,845.00	161.02	10,632.10		428.40		285.60	411.43	111.82	18,752.41	45,731.27
Jun-20	793.05	2.37			1,152.26	118.75	9,405.00		13,496.57		611.40		407.60	423.30	130.31	26,540.61	59,584.39
TOTALS	17,668.47	22.09	0.00	9,578.38	16,489.13	118.75	84,050.00	2,397.48	143,952.63	0.00	2,083.83	71.25	1,389.20	6,564.38	2,440.92	296,826.51	642,533.42

T-931 0931000	T-932 0932000	T-933 0933000	T-934 0934000	T-935 0935000	T-936 0936000	T-950 0950000	T-954 0954000	T-957 0957000	T-962 0962000	T-963 0963000	TOTALS
201.91	1.48	121.87	669.84	4.05	10.13	0.52	589.77	401.08		684.37	25,749.75
123.36		78.06	405.10		10.18		366.65	244.81		412.78	15,547.46
84.00		47.52	273.13		9.82	5.41	255.43	164.67		286.96	10,950.94
194.74	0.55	146.08	608.63		22.37	1.20	580.60	384.59		678.36	27,568.54
147.74	4.35	75.92	486.27		14.77	9.19	453.05	295.09		521.64	29,788.29
143.27	0.55	62.99	494.25		7.03	8.07	409.05	278.91		472.98	22,242.48
164.12	2.34	70.04	573.02		5.45	5.37	489.04	322.43		569.89	26,190.16
280.35	3.36	99.78	927.51		9.97	0.28	808.07	515.32		933.09	34,440.91
238.60		83.15	863.94		4.24	2.89	730.93	469.40		810.89	33,700.58
242.03	7.60	70.88	881.24		6.40	2.04	757.43	479.49		872.12	32,253.83
162.35		69.50	577.37			1.88	471.88	321.26		544.11	27,251.33
170.43	0.09	61.46	591.41		27.52	1.16	536.48	332.64		588.93	26,978.86
204.84		58.99	736.12		17.24	6.48	637.74	401.54		723.37	33,043.78
2,337.74	20.32	1,046.22	8,087.83	4.05	146.12	44.49	7,086.12	4,611.03	0.00	8,099.49	345,706.91

642,[illegible]3.42
- 16,540.
625,9[illegible]

CLERK OF THE COURT BACK UP REPORTS

2061-00

2019-2020

DATE	T-801 0801000	T-802 0802000	T-810 0810000	T-811 0811000	T-812 0812000	T-813 0813000	T-814 0814000	T-818 0818000	T-818 0818000	T-833 0833000	T-840 0840000	T-847 0847000	T-848 0848000	T-849 0849000	T-850 0850000	T-857 0857000	T-870 0870000	T-871 871000	T-872 0872000	T-874 0874000	T-875 0875000	T-884 0884000
Jul-19	3,787.04	3,327.55	336.34	13.97	379.10	104.59	29.97	235.63				71.25	61.97	2.04	28.29	45.08	52.49		31.75	223.58	1,531.97	
Aug-19	3,222.71	2,837.04	286.98	69.97	1,204.10	332.40	178.22	241.57		14.36		114.00	53.04	3.30	29.60	38.48	176.08		161.82	189.07	1,296.69	45.12
Sep-19	3,673.59	3,247.55	329.38	60.78	1,954.66	540.01	58.52	268.60		0.30		47.50	60.91	8.98	1,059.14	44.21	288.65		231.02	212.12	1,453.12	
Oct-19	4,143.46	3,661.23	365.40	1.11	2,487.00	666.39	136.32	249.83		0.30		23.75	67.38	0.16	611.56	49.11	250.45		203.24	244.81	1,725.73	90.25
Nov-19	2,733.99	2,419.53	244.94	22.23	429.31	118.09	278.21	234.90		0.30		152.00	45.21	3.28	23.75	32.85	60.05		51.14	161.07	1,151.37	45.12
Dec-19	3,600.12	3,337.33	337.08	0.56	525.06	153.44	52.04	279.50				71.25	62.11	0.08	56.73	45.30	79.08		66.19	226.19	1,548.55	
Dec-19																						
Jan-20	3,608.84	3,175.66	321.26	27.07	3,682.45	1,018.45	46.77	153.50		19.56		142.50	59.15	4.00	160.97	43.08	545.20		401.20	211.44	1,449.72	
Jan-20																						
Feb-20	3,924.46	3,465.20	350.64	12.74	2,608.55	716.77	136.32	357.39				95.00	64.55	1.88	32.98	47.06	369.78		344.94	233.47	1,569.00	
Feb-20																						
Mar-20	3,710.38	3,348.70	342.81	172.30	2,167.62	595.72	109.84	389.34		0.28		60.80	63.44	25.42	1,810.30	45.86	308.98		202.08	204.95	1,403.54	
Mar-20																						
Apr-20	2,530.74	2,238.90	226.99	34.50	1,921.62	529.49	511.78	273.93		0.21		245.91	41.92	5.10	718.49	30.51	253.00		178.92	147.24	1,008.95	80.25
Apr-20																						
May-20	2,714.13	2,398.87	243.32	27.85	1,460.89	404.65	203.09	292.76				31.13	44.93	4.10	379.61	32.72	214.34		109.76	159.31	1,137.99	45.12
Jun-20	3,571.21	3,168.86	321.46	160.15	10,890.22	3,011.99	50.17	407.73		14.81			59.27	9.60	556.85	43.17	1,617.73	0.11	1,362.81	206.41	1,480.69	154.40
Jun-20																						
TOTALS	41,420.47	36,626.42	3,706.62	603.23	29,710.50	8,194.99	1,787.25	3,362.36	0.00	50.10	0.00	1,055.09	683.88	67.94	5,468.36	497.41	4,214.83	0.11	3,344.87	2,419.68	18,757.32	470.26

DATE	1005000	1005000 4611	1005000 4651	1005000	1005000	1005000 4613	1005000 4832	1005000	1005000 4834	1005000 4429	3541000	3544000 4620	3547000 4620	4042000 4777	4042000 4835	4042000 4836	4146000 4777	4146000 4264	4147000 4777	4147000 4589	4501000	4502000
Tyler Code	201.142.3900 98	300.340.3405 22	300.442.3405 40	302.3310.00	302.3360.85	302.3400.14	302.3510.10	302.3800.30	338.3405.34	345.3300.00	301.3510.11	301.3400.99	301.3400.11	335.3400.99	335.3405.30	335.3405.31	335.3400.99	335.3510.99	335.3400.99	335.3405.33	337.3400.14	303.3400.14
Jul-19					3.38	7,354.34	884.28			336.30		4,707.26	1,990.00	22.17	14,154.11	12.82		237.50		123.60	2,653.41	1,328.38
Aug-19					5.47	7,600.73	2,621.47	2.37		691.59		7,048.53	2,230.00	285.68	15,264.99	75.52		541.50		68.60	2,272.98	1,152.11
Sep-19					4.41	7,175.19	4,547.92			391.45		6,410.58	1,428.00	9.66	10,094.21	24.22	47.50	285.00		192.85	2,608.17	1,429.70
Oct-19					1.92	7,646.79	5,225.66	4.75	261.25	485.68		6,591.13	1,725.04	34.49	11,725.50	58.42		95.00		3.04	2,893.36	1,082.95
Nov-19					2.87	5,034.71	1,105.78	2.37		371.59		3,688.61	905.00		8,622.86	119.22	3.94	408.50		102.60	1,940.25	1,203.94
Dec-19					3.49	7,080.66	1,431.28			747.07		3,916.89			10,318.10	21.37	0.28	665.00	10.12	266.38	2,668.68	1,916.17
Dec-19																					10.42	
Jan-20					5.77	30,841.37	8,070.72			757.15		4,428.79	1,320.00		10,163.04	19.95	0.26	902.50	8.50	68.65	2,543.37	1,126.20
Jan-20																					19.54	
Feb-20					4.77	8,062.38	7,031.23			452.46		7,705.09	810.00	135.25	13,830.38	58.42		380.00	43.30	330.57	2,776.84	1,443.72
Feb-20																					22.14	
Mar-20					4.46	10,302.12	4,688.39		146.30	853.51		7,602.08	872.00	439.62	15,938.21	47.02	189.05	475.00	68.78	1,084.16	2,716.51	1,818.07
Mar-20																					14.34	
Apr-20					6.30	3,905.54	6,637.81	4.75	476.75	608.04		8,956.13	1,885.00	221.88	20,247.92	219.32	63.46	593.45	153.93	1,536.60	1,797.68	1,141.00
Apr-20																						
May-20					1.84	4,041.74	3,454.59	2.37	920.82	1,036.06		7,412.21	485.00	386.93	14,032.20	86.92	71.84	360.34	327.25	1,695.54	1,926.54	1,425.32
May-20																						
Jun-20					7.01	5,386.97	24,824.94	8.12	1,010.71	764.90		11,831.46	700.00	81.06	21,204.80	21.37		580.60	133.05	562.71	2,546.97	1,358.54
Jun-20																					22.14	
TOTALS	0.00	0.00	0.00	0.00	51.69	104,432.54	70,732.07	24.73	2,815.83	7,495.80	0.00	80,296.76	14,350.04	1,616.74	165,596.32	764.57	376.13	5,540.39	784.93	6,032.10	29,442.14	18,424.10

T-888 0888000	T-889 0889000	T-895 0895000	T-902 0902000	T-908 0908000	T-912 0912000	T-917 0917000	T-930 0930000	T-932 0932000	T-933 0933000	T-934 0934000	T-954 0954000	T-957 0957000	TOTALS
81.48	23.75	2,263.16	557.18	950.29	1,007.09		27.10		13.57		0.07	0.03	15,186.33
265.97		2,397.43	671.43	1,472.50	2,051.35		43.80	3.80	18.11			5.70	17,321.73
1,264.07	237.50	2,328.81	613.00	561.80	605.56		35.24	3.80	13.82			3.80	19,101.56
378.35		2,535.30	827.93		180.17		15.38		7.69				18,825.08
92.44	93.80	1,562.26	428.94	47.50	80.00		22.98		11.49				10,546.73
121.00	143.70	2,050.06	484.50	137.75	24.20		27.93	3.80	10.16		3.60	1.28	13,648.65
		1.09											1.09
519.94		3,855.06	556.93	870.15	461.06		46.18	3.80	18.33	0.94	0.37	2.52	21,805.87
		2.05											2.05
556.04		2,812.15	708.77	852.14	538.29		38.17	3.80	12.43	2.86		1.84	19,887.32
		2.32											2.32
466.32	237.50	3,132.06	413.25	1,615.47	97.34		35.68		17.83		0.20	0.20	20,979.19
		1.49											1.49
382.56	7.61	2,759.08	313.50	1,435.14	230.00		50.38		25.17		0.03	1.91	16,193.79
													0.00
324.53	358.17	2,310.99	327.75	1,889.09	1,897.44		14.81	5.80	1.80		0.46	0.16	17,034.38
2,432.72	237.50	4,871.57	458.76	3,759.62	2,788.13		56.05	8.85	19.34		0.48	0.18	41,688.66
		2.32											2.32
7,186.18	1,339.53	32,885.37	6,261.94	13,591.45	9,958.63	0.00	413.64	33.25	169.74	3.80	5.21	17.72	232,338.56

4542000 4242	4559000	4566000	4574000	4578000 4613	4840000	4841000	4842000	4844000	4846000	TOTALS
333.3400.13	333.3400.14	333.3400.14	333.3400.16	333.3400.14	302.3400.16	302.3400.14	302.3400.14	302.3400.14	302.3400.14	
420.00	290.00	171.00	2,353.67	316.35	784.52	316.35	1,120.25	97.42	1,435.09	41,132.10
417.00	247.98	156.75	3,524.29	289.99	1,174.74	289.99	1,041.48	83.88	1,246.57	48,332.11
600.00	237.50	85.50	3,205.33	158.17	1,068.41	158.17	1,133.01	109.98	1,424.57	42,829.50
660.00	142.50	116.99	3,295.63	216.44	1,098.48	216.44	1,390.32	83.31	1,512.24	46,567.33
590.00	251.75	71.25	1,843.35	131.81	614.40	131.81	901.79	92.62	1,079.61	29,218.53
900.00	95.00	131.24	2,513.52	242.80	652.78	242.80	1,211.70	137.90	1,461.27	36,633.50
									10.27	20.69
790.00	186.48	60.00	2,214.43	110.99	738.12	110.99	1,170.32	88.61	1,334.28	67,038.49
									18.26	38.80
780.00	288.09	133.94	3,852.64	247.78	1,284.15	247.79	1,298.44	106.32	1,556.18	52,859.54
									21.83	43.97
900.00	605.68	300.65	3,801.12	546.57	1,266.96	546.57	1,197.10	127.39	1,539.46	58,091.78
									14.13	28.47
660.00	156.07	147.43	4,478.04	268.43	1,492.64	266.43	880.28	87.75	1,030.39	58,101.02
										0.00
540.00	262.70	67.40	3,706.20	123.80	1,235.29	123.80	924.66	109.18	1,100.21	45,850.55
										0.00
840.00	198.80	209.35	5,915.78	393.55	1,971.87	393.55	1,083.94	104.91	1,468.68	83,589.61
									21.83	43.97
										0.00
										0.00
										0.00
8,097.00	2,932.55	1,851.50	40,703.98	3,034.67	13,382.36	3,034.89	13,333.29	1,227.27	16,275.77	610,429.96

610,429.96
− 7,186.58
603,243.38

TOTALS		REPORTS	TOTAL
Jul-19	15,186.33	41,132.10	56,318.43
Aug-19	17,321.73	48,332.11	65,653.84
Sep-19	19,101.56	42,829.50	61,931.06
Oct-19	18,925.08	46,567.33	65,492.41
Nov-19	10,546.73	29,218.53	39,765.26
Dec-19	13,648.65	36,633.50	50,282.15
Dec-19	1.09	20.69	21.78
Jan-20	21,805.87	67,038.49	88,844.36
Jan-20	2.05	38.80	40.85
Feb-20	19,887.32	52,859.54	72,746.86
Feb-20	2.32	43.97	46.29
Mar-20	20,979.19	58,091.78	79,070.97
Mar-20	1.49	28.47	29.96
Apr-20	16,193.78	58,101.02	74,294.80
May-20	17,034.38	45,850.55	62,884.93
Jun-20	41,698.66	83,599.61	125,298.27
Jun-20	2.32	43.97	46.29
			0.00
TOTALS	232,338.55	610,429.96	842,768.51

PAYSON JUSTICE COURT FILL THE GAP 2019-2020

TR Date	T-801 0801000	T-812 0812000	T-813 0813000	T-818 0818000	T-833 0833000	T-840 0840000	T-847 0847000	T-848 0848000	T-855 0855000	T-870 0870000	T-871 0871000	T-872 0872000	T-874 0874000	T-875 0875000	T-883 0883000	T-884 0884000	T-888 0888000	T-895 0895000
Jul-19	365.88	5,855.40	1,743.86	1,013.93		421.12	980.25	49.07		936.74	3,998.55	809.61	155.76			49.64	1,591.94	2,553.36
Aug-19	142.91	3,350.48	1,002.34	447.07		164.47	609.51	19.17		539.60	2,461.35	464.10	60.83			101.53	866.41	1,516.19
Aug-19	297.27	2,443.91	724.69	444.07		342.12	423.80	39.88		354.96	1,685.55	374.81	126.51				606.83	1,092.83
Sep-19	474.47	5,387.09	1,600.84	858.00		546.07	965.10	63.62	55.00	781.89	3,903.87	821.51	201.90		2,616.79		1,361.73	2,361.61
Oct-19	349.55	4,766.55	1,421.17	968.50	3,849.39	402.34	753.03	46.90	140.00	765.01	2,977.39	658.75	148.75		3,849.39		1,161.79	2,143.92
Nov-19	394.09	3,926.92	1,165.89	655.52	28.50	453.59	679.90	52.86	106.71	627.48	2,896.77	541.87	167.72		3,104.44	13.98	950.51	1,744.25
Dec-19	443.92	4,763.69	1,421.21	782.60	14.25	510.96	813.02	59.54	134.34	764.87	3,316.63	658.24	188.93		3,334.85	37.90	1,166.28	2,220.10
Jan-20	424.83	7,242.54	2,182.08	861.25		489.00	1,343.53	56.98	37.36	1,174.45	5,190.87	1,008.06	180.79		3,073.90	11.29	1,781.54	2,817.63
Feb-20	346.99	5,873.75	1,762.70	910.51		399.36	1,215.23	46.53	29.00	948.65	4,831.63	819.86	145.97		4,890.79	35.21	1,442.80	2,576.32
Mar-20	419.58	5,682.57	1,720.94	943.95	23.75	482.85	1,259.18	56.29	416.78	926.28	4,885.94	797.01	178.55		4,131.42	16.24	1,410.98	2,567.51
Apr-20	142.12	5,657.31	1,681.59	937.32		163.52	784.38	19.06	50.00	905.16	3,253.06	779.03	60.47		4,360.12	109.20	1,364.59	2,051.84
May-20	251.17	4,871.57	1,447.44	764.09		289.16	891.63	33.68	135.08	779.12	3,436.76	672.87	106.90		4,153.75		1,180.27	2,015.43
Jun-20	292.61	6,750.26	2,031.04	786.14	14.25	336.90	1,060.32	39.23	47.50	1,093.38	4,130.55	942.09	124.43		5,736.99	45.12	1,654.58	2,660.35
TOTALS	4,345.39	66,572.04	19,805.79	10,372.95	3,930.14	5,001.46	11,778.88	582.81	1,151.77	10,599.59	46,948.92	9,347.81	1,847.51	0.00	39,272.44	420.11	16,540.25	28,321.34

	X-105 1005000 300.340.3405.40	X-105 1005000 302.3800.30	X-105 1005000 314.3350.00	X-105 1005000 314.3400.00	X-105 1005000 314.3400.11	X-105 1005000 314.3400.15	X-105 1005000 314.3400.17	X-105 1005000 314.3400.90	X-105 1005000 314.3400.99	X-105 1005000 314.3510.10	X-105 1005000 345.3300.00	X-182 3544000 301.3400.11	X-250 4042000 335.3405.30	X-226 4574000 333.3400.16	X-360 4741000 314.3400.15	TOTAL	TOTALS OF TREAS. REC.
Jul-19	420.50	2.61			132.48	999.29		10,640.00	759.60	12,466.18		970.39	23.75	646.92	705.81	27,767.53	53,517.28
Aug-19	265.50	5.35			12.28	384.42		4,940.00	1,189.46	8,041.80		73.64	23.75	49.08	304.37	15,299.65	30,847.11
Aug-19	2,251.03				450.00	1,170.36		4,655.00		5,034.82					371.49	13,932.70	24,883.64
Sep-19	3,079.51				537.00	1,868.02		7,980.00		13,414.35					673.29	27,552.17	55,120.71
Oct-19	2,298.53				1,626.00	1,376.28		8,059.80	71.25	10,780.50			23.75		677.17	24,913.28	54,701.57
Nov-19	1,707.21	0.74			900.35	1,551.62		5,525.20		8,050.73					528.47	18,264.32	40,506.80
Dec-19	1,930.05	1.99			915.98	1,747.79		9,595.00		9,725.64					619.05	24,535.50	50,725.66
Dec-19															1,027.10	1,027.10	1,027.10
Jan-20	892.04	0.59			1,778.54	1,672.64		8,645.00		15,092.39					652.90	28,734.10	63,175.01
Feb-20	799.84	1.84			1,274.00	1,366.17		6,650.00		12,972.25					644.81	23,708.91	57,409.49
Feb-20															460.89	460.89	460.89
Mar-20	865.16	0.85			1,378.75	1,651.81		8,265.00	206.15	12,012.91					695.08	25,075.71	57,329.54
Apr-20	1,478.00	5.75			573.00	559.48		4,845.00		12,232.39					568.01	20,261.63	47,512.96
May-20	888.05					988.99		4,845.00	161.02	10,632.10		428.40		285.60	523.25	18,752.41	45,731.27
Jun-20	793.05	2.37				1,152.26	118.75	9,405.00		13,496.57		611.40		407.60	553.61	26,540.61	59,584.39
TOTALS	17,868.47	22.09	0.00	0.00	9,578.38	16,489.13	118.75	94,050.00	2,397.48	143,952.63	0.00	2,083.83	71.25	1,389.20	9,005.30	296,826.51	642,533.42

T-901 0901000	T-912 0912000	T-916 0916000	T-930 0930000	T-931 0931000	T-932 0932000	T-933 0933000	T-934 0934000	T-935 0935000	T-936 0936000	T-950 0950000	T-951 0951000	T-954 0954000	T-957 0957000	T-962 0962000	T-963 0963000	TOTAL
	883.97	38.00	1,615.65	201.91	1.48	121.87	669.84	4.05	10.13	0.52		589.77	401.08		684.37	25,749.75
	1,159.77	14.25	986.74	123.36		78.06	405.10		10.18			366.65	244.61		412.78	15,547.46
	166.25	28.50	672.02	84.00		47.52	273.13		9.82	5.41		255.43	164.67		288.96	10,950.94
	1,327.34	66.50	1,558.09	194.74	0.55	146.08	608.63		22.37	1.20		580.60	384.59		678.36	27,568.54
	2,139.40	57.00	1,181.44	147.74	4.35	75.92	486.27		14.77	9.19		453.05	295.09		521.64	29,788.29
	1,632.10	76.00	1,146.28	143.27	0.55	62.99	494.25		7.03	8.07		409.05	278.91		472.98	22,242.48
	2,006.40	38.00	1,312.73	164.12	2.34	70.04	573.02		5.45	5.37		489.04	322.43		569.89	26,190.16
	859.75	65.00	2,082.33	260.35	3.36	99.78	927.51		9.97	0.28		808.07	515.32		933.09	34,440.91
	2,231.55	80.75	1,908.94	238.60		83.15	863.94		4.24	2.89		730.93	469.40		810.89	33,700.58
	1,045.95	52.25	1,936.60	242.03	7.60	70.86	881.24		6.40	2.04		757.43	479.49		872.12	32,253.83
	1,456.83	9.50	1,297.88	162.35		69.50	577.37			1.88		471.88	321.26		544.11	27,251.33
	2,261.98	14.25	1,363.59	170.43	0.09	61.46	591.41		27.52	1.16		536.48	332.64		588.93	26,978.86
	845.14	28.50	1,638.08	204.84		58.99	736.12		17.24	6.48		637.74	401.54		723.37	33,043.78
																0.00
0.00	18,016.43	568.50	18,700.37	2,337.74	20.32	1,046.22	8,087.83	4.05	145.12	44.49	0.00	7,086.12	4,611.03	0.00	8,099.49	**345,706.91**

642,533.42
- 166,540.25

CLERK OF COURT — FILL THE GAP

TR DATE	T-801 0801000	T-802 0802000	T-810 0810000	T-811 0811000	T-812 0812000	T-813 0813000	2019-2020 PRIOR T-814 0814000	JCEF T-818 0818000	T-818 0818000	T-833 0833000	T-847 0847000	T-848 0848000	T-849 0849000	T-850 0850000	T-857 0857000	T-870 0870000	T-871 0871000	T-872 0872000	T-874 0874000	T-875 0875000	T-884 0884000	T-888 0888000	T-889 0889000	T-895 0895000
Jul-19	3,787.04	3,327.55	336.34	13.97	379.1	104.59	29.97	236.63			71.25	61.97	2.04	28.29	45.08	52.49		31.76	223.58	1,531.97		51.49	23.75	2,263.16
Aug-19	3,222.71	2,837.04	286.98	69.97	1204.1	332.49	176.22	241.57		14.36	114.00	53.04	3.30	29.69	38.48	175.08		161.82	189.07	1,298.69	45.12	265.97		2,397.43
Sep-19	3,673.59	3,247.55	328.38	60.78	1954.68	540.01	56.52	268.50		0.30	47.50	60.91	8.98	1,059.14	44.21	288.65		231.02	212.12	1,453.12		1,264.07	237.50	2,328.01
Oct-19	4,143.48	3,661.23	365.4	1.11	2487	668.39	136.32	249.63		0.30	23.75	67.38	0.16	611.56	49.11	250.45		203.24	244.61	1,725.73	90.25	479.35		2,535.30
Nov-19	2,733.99	2,419.53	244.94	22.23	429.31	118.09	278.21	234.90		0.30	152.00	45.21	3.28	23.75	32.85	50.06		51.14	161.07	1,151.37	45.12	92.44	63.80	1,562.26
Dec-19	3,600.12	3,337.33	337.08	0.56	525.06	153.44	52.04	279.50			71.25	62.11	0.08	56.73	46.30	79.06		66.19	228.19	1,548.55		121.06	143.70	2,050.06
Jan-20	3,608.64	3,175.66	321.26	27.07	3,682.45	1,018.45	48.77	153.50		19.56	142.50	59.15	4.00	160.97	43.06	545.20		401.20	211.44	1,449.72		819.94		1.09
Jan-20																								3,656.85
Feb-20	3,824.46	3,468.20	350.64	12.74	2,606.55	716.77	136.32	357.38			95.00	64.55	1.88	32.98	47.06	369.76		344.94	233.47	1,599.00		[illegible]		2.06
Feb-20																								2,612.15
Mar-20	3,710.38	3,348.70	342.61	172.30	2,167.62	596.72	109.84	389.34		0.28	60.80	63.44	25.42	1,810.30	48.88	308.98		202.08	204.95	1,403.54		[illegible]	237.50	2.32
Mar-20																								3,132.06
Apr-20	2,530.74	2,238.90	226.99	34.50	1,921.52	629.49	511.78	273.93		0.21	245.91	41.92	5.10	718.49	30.51	253.00		178.92	147.24	1,008.95	90.25	[illegible]	7.61	1.48
Apr-20																								2,769.06
May-20	2,714.13	2,358.87	243.32	27.85	1,460.89	404.85	203.09	292.78			31.13	44.93	4.10	379.61	32.72	214.34		109.76	159.31	1,137.98	45.12	324.53	358.17	2,310.00
Jun-20	3,571.21	3,188.86	321.48	160.15	10,890.22	3,011.99	50.17	407.73		14.61		59.27	9.60	556.85	43.17	1,617.73	0.11	1,362.61	208.41	1,460.89	154.40	2,432.72	237.50	4,871.57
Jun-20																								2.32
TOTALS	41,420.47	36,826.42	3,706.62	603.23	29,710.50	8,184.99	1,767.25	3,382.38	0.00	50.10	1,055.09	683.88	67.94	5,468.36	497.41	4,214.83	0.11	3,344.87	2,419.66	16,767.32	470.26	7,186.58	1,339.53	[illegible]

	1005000 x-105 201.142.3900.58	1005000 X-105 300.340.3485.22	1005000 X-105 300.442.3485.40	1005000 X105 302.3350.85	1005000 X-105 302.3400.14	1005000 X-105 302.3510.10	1005000 X-105 302.3800.30	1005000 X-105 336.3405.34	1005000 X-105 345.3300.00	3544000 X-182 301.3400.89	3547000 X-599 301.3400.11	4042000 X-250 335.3400.99	4042000 X-250 335.3405.30	4042000 X-250 335.3405.31	4146000 X-262 335.3400.99	4146000 X-262 335.3510.99	4147000 X-266 335.3400.99	4147000 X-266 335.3405.33	4501000 X-120 337.3400.14	4502000 X-128 303.3400.14	4542000 X-219 333.3400.13	4559000 X-199 333.3400.14	4566000 X-186 333.3400.14	4574000 X-226 333.3400.18
Jul-19				3.38	7,354.34	894.28			336.30	4,707.26	1,980.00	22.17	14,154.11	12.82		237.50		123.50	2,683.41	1,328.38	420.00	290.00	171.00	2,363.67
Aug-19				5.47	7,600.73	2,621.47	2.37		691.59	7,048.83	2,230.00	285.68	15,264.99	75.52		541.50		56.50	2,272.98	1,162.11	417.00	247.98	156.75	3,324.29
Sep-19				4.41	7,175.19	4,547.92			391.45	8,410.58	1,428.00	9.66	10,094.21	24.22		332.50		182.85	2,808.17	1,429.70	600.00	237.50	65.50	3,205.33
Oct-19				1.92	7,646.79	5,225.66	4.75	261.25	485.68	6,591.13	1,725.04	34.49	11,725.50	58.42		95.00		3.04	2,893.36	1,082.95	660.00	142.50	118.99	3,295.63
Nov-19				2.87	5,034.71	1,105.78	2.37		371.59	3,686.61	905.00	3.94	8,622.86	119.22		408.50		102.60	1,940.25	1,203.94	590.00	261.75	71.25	1,843.35
Dec-19				3.49	7,080.66	1,431.28			747.07	3,916.89	555.00	0.28	10,318.10	21.37		665.00	10.12	265.38	2,668.68	1,916.17	900.00	95.00	131.24	1,958.52
Jan-20				5.77	30,841.37	8,070.72			757.15	4,428.79	1,320.00	0.26	10,163.04	19.95		902.50	8.50	68.65	10.42 2,543.37	1,126.20	790.00	166.48	60.00	2,214.43
Jan-20				4.77	8,062.38	7,031.23			452.48	7,705.09	810.00		13,830.38	58.42	135.25	380.00	43.30	330.67	19.54 2,776.64	1,443.72	780.00	266.09	133.94	3,852.64
Feb-20				4.46	10,302.12	4,686.39		146.30	653.51	7,602.08	872.00	430.62	15,938.21	47.02	189.05	475.00	88.78	1,064.16	22.14 2,715.51	1,816.07	900.00	605.68	300.68	3,801.12
Feb-20				6.30	3,906.54	6,837.81	4.75	476.75	608.04	8,956.13	1,885.00	221.88	20,247.92	219.32	63.48	593.45	153.93	1,536.60	14.34 1,797.68	1,141.00	660.00	156.07	147.43	4,478.04
Mar-20				1.84	4,041.74	3,454.59	2.37	920.82	1,036.06	7,412.21	485.00	366.93	14,032.20	86.92	71.64	360.34	327.25	1,695.64	1,926.64	1,425.32	540.00	252.70	67.40	3,706.20
Mar-20				7.01	5,386.97	24,824.94	8.12	1,010.71	764.90	11,831.46	700.00	81.06	21,204.60	21.37		596.60	133.05	562.71	2,546.97	1,358.54	840.00	198.80	209.35	5,816.76
Apr-20																			22.14					
TOTALS	0.00	0.00	0.00	51.68	104,432.54	70,732.07	24.73	2,815.53	7,495.80	80,296.76	14,905.04	1,485.97	165,598.32	754.57	459.40	5,587.89	784.93	6,032.10	29,442.14	16,424.10	8,097.00	2,932.56	1,651.50	40,148.98

T-902 0902000	T-908 0908000	T-912 0912000	T-917 0917000	T-930 0930000	T-932 0932000	T-933 0933000	T-934 0934000	T-937 0937000	T-942 0942000	T-954 0954000	T-957 0957000	T-961 961000	TOTAL
557.18	960.29	1,007.09		27.10		13.57				0.07	0.03		15,186.33
571.43	1,472.50	2,051.35		43.80	3.80	18.11					5.70		17,321.73
513.00	561.80	805.58		35.24	3.80	13.82					3.80		19,101.56
827.93		180.17		15.36		7.69							18,925.08
428.94	47.50	80.00		22.96		11.49							10,546.73
484.50	137.75	24.20		27.93	3.80	10.16				3.60	1.28		13,648.65
													1.09
656.83	870.16	461.06		48.18	3.80	18.33	0.04			0.37	2.52		21,605.87
													2.05
708.77	852.14	538.29		38.17	3.80	12.43	2.88				1.94		19,887.32
													2.32
413.25	1,615.47	97.34		35.68		17.83				0.20	0.20		20,979.19
													1.49
313.50	1,435.14	230.00		50.38		25.17				0.03	1.91		16,193.78
													0.00
327.75	1,869.09	1,897.44		14.81	5.60	1.80				0.46	0.16		17,034.38
458.78	3,759.62	2,786.13		56.05	8.65	19.34				0.48	0.16		41,698.68
													2.32
													0.00
													0.00
													0.00
6,261.94	13,591.45	9,958.63	0.00	413.64	33.25	169.74	3.80	0.00	0.00	5.21	17.72	0.00	232,338.55

4578000 X-477	4840000 X-126	4841000 X-129	4842000 X-157	4844000 X-170	4846000 X-353	TOTAL
333.3400.14	302.3400.16	302.3400.14	302.3400.14	302.3400.14	302.3400.14	
316.35	784.52	316.35	1,120.25	97.42	1,435.09	41,132.10
289.99	1,174.74	289.99	1,041.48	83.88	1,246.57	48,332.11
158.17	1,069.41	158.17	1,133.01	109.98	1,424.57	42,829.50
216.44	1,066.48	216.44	1,360.32	83.31	1,612.24	46,567.33
131.81	514.40	131.81	901.79	92.62	1,079.51	29,218.53
242.80	652.78	242.80	1,211.70	137.90	1,461.27	36,633.50
					10.27	20.68
110.99	736.12	110.99	1,170.32	88.61	1,334.28	67,038.49
					19.26	38.80
247.78	1,284.15	247.79	1,298.44	108.32	1,556.16	82,869.54
					21.83	43.97
546.57	1,266.98	546.57	1,197.10	127.39	1,539.46	68,681.78
					14.13	28.47
266.43	1,492.64	266.43	860.28	87.75	1,030.39	58,191.82
						0.00
123.80	1,235.29	123.80	924.66	109.18	1,100.21	45,850.55
383.54	1,971.87	383.55	1,083.94	104.91	1,468.68	83,599.61
					21.83	43.97
						0.00
						0.00
						0.00
						0.00
3,034.67	13,382.36	3,034.69	13,333.28	1,227.27	16,275.77	610,429.96

610,429
- 7
8

	T-ACCTS.	X-ACCTS.	G. TOTALS
Jul-19	15,186.33	41,132.10	56,318.43
Aug-19	17,321.73	48,332.11	65,653.84
Sep-19	19,101.56	42,829.50	61,931.06
Oct-19	18,925.68	46,567.33	65,492.41
Nov-19	10,546.73	29,218.53	39,765.26
Dec-19	13,648.65	36,633.50	50,282.15
Jan-20	21,805.87	67,038.49	88,844.36
Feb-20	19,887.32	52,859.54	72,746.86
Feb-20	2.32	43.97	46.29
Mar-20	20,979.19	58,091.78	79,070.97
Mar-20	1.49	28.47	29.96
Apr-20	16,193.78	58,101.02	74,294.80
Apr-20	0.00	0.00	0.00
May-20	17,034.38	45,850.55	62,884.93
Jun-20	41,698.66	83,599.61	125,298.27
Jun-20	2.32	43.97	46.29
	232,335.41	610,370.47	842,705.88

GLOBE REGIONAL COURT FILL THE GAP 2019-2020

TR Date	0801000	0812000 CJEF	0813000	0814000	0833000	0840000 JCEF 13%	0840000 JCEF	0847000	0848000	0855000	0870000	0871000	0872000	0874000	0884000	0888000	0889000	0895000	0908000	0915000	0930000
Jul-18	322.88	6,886.94	1,981.94			1,239.35	371.64	760.94	43.30		1,028.09	3,877.92	813.35	137.41	128.90	1,567.95	475.00	2,594.31	3,615.32	80.75	1,436.49
Aug-18	319.80	5,868.72	1,700.08			1,537.95	368.13	647.77	42.87	178.32	860.46	3,236.06	779.01	136.11	170.95	1,405.19		2,285.88	2,021.90	14.25	1,231.18
Sep-18	358.74	7,030.82	2,040.02			1,320.43	413.06	724.79	48.08	88.61	1,017.28	3,333.16	920.61	152.68	174.12	1,572.48	141.83	2,446.03	2,029.38		1,277.69
Oct-18	374.64	6,187.85	1,808.40			1,570.57	431.45	678.73	50.18	67.85	932.29	3,129.21	767.16	159.42	180.50	1,420.31	325.38	2,315.38	1,809.27		1,196.15
Nov-18	335.54	4,746.94	1,385.79			1,204.91	386.41	558.03	46.00	31.58	736.82	2,542.78	600.10	142.83	48.97	1,125.47		1,832.34	1,939.30		961.21
Dec-18	434.37	6,027.80	1,764.01			1,309.41	500.19	622.40	58.22	176.06	928.74	2,917.24	761.48	184.86	118.59	1,425.17	358.48	2,247.88	1,955.79		1,148.31
Jan-20	386.42	6,670.89	1,930.22		14.25	1,578.38	445.03	659.58	51.78	17.02	1,023.35	3,507.03	828.98	164.44	153.49	1,562.35	139.17	2,453.95	3,065.94		1,334.34
Jan-20		26.53	7.35								3.96		3.38			5.94		23.83			
Feb-20	272.47	6,758.29	1,971.40			1,450.99	313.80	785.52	36.50	20.79	1,016.87	3,926.10	868.76	115.95	113.54	1,530.05	455.57	2,285.52	1,938.35		1,486.17
Feb-20		138.91	38.42								20.69		18.53			31.13		69.06			
Mar-20	341.62	10,057.06	2,906.79			2,180.01	393.30	735.71	45.79	24.32	1,519.80	4,463.24	1,190.54	145.39	170.13	2,339.78	242.06	3,233.13	4,389.95		1,555.09
Apr-20	104.03	8,069.45	2,353.53			1,484.34	119.79	667.54	13.95	30.24	1,251.07	3,535.82	1,054.66	44.27	63.57	1,893.68	237.02	2,728.64	4,587.05		1,247.47
May-20	435.67	6,998.87	2,023.87			985.77	501.70	628.90	58.40	108.68	1,070.92	3,140.75	852.79	183.98	142.13	1,835.60	0.47	2,600.96	4,157.89		1,148.92
Jun-20	292.31	9,462.25	2,739.99	27.9.99	14.25	1,752.57	336.65	929.79	39.17	35.16	1,456.20	4,711.21	1,228.74	124.42	71.65	2,185.09		2,944.10	2,892.61		1,772.15
TOTALS	3,978.49	84,921.32	24,651.81	0.00	28.50	17,614.68	4,581.15	8,399.70	533.24	778.63	12,866.54	42,320.52	10,688.09	1,691.76	1,536.54	19,700.19	2,374.96	30,061.89	34,402.75	95.00	15,815.15

	X-105 1005000 300.340.3400.15	X-105 1005000 300.340.3510.10	X-105 1005000 300.442.3405.40	X-105 1005000 311.3360.85	X-105 1005000 311.3400.10	X-105 1005000 311.3400.15	X-105 1005000 311.3400.17	X-105 1005000 311.3510.10	X-105 1005000 311.3800.30	X-105 1005 345.3300.00	X-105 1005000 345.3350.00	X-182 3544000 301.3360.50	X-182 3544000 301.3400.11	GRAND X-183 3545000 301.3380.50	X183 3545000 301.3400.11	X-250 4042000 335.3405.30	X-226 4574000 333.3400.16	X-357 4740000 311.3400.15	TOTAL	TOTALS OF TREAS. REC.
Jul-19		153.83	1,293.81		83.09	1,422.76	1,273.59	18,363.42	6.78	140.12			1,535.95		107.16	376.33	1,023.96	667.33	26,448.13	56,011.78
Aug-19		179.06	1,085.64		139.46	1,409.15	2,290.06	16,563.72	8.99	1,452.22			1,161.74		269.28	401.13	774.48	822.76	26,557.69	51,245.54
Sep-19			1,464.66		146.87	1,697.71	2,691.25	15,711.63	9.15	2,019.94			1,258.17		237.17	571.78	838.78	710.99	27,358.10	54,459.87
Oct-19		122.01	1,434.59		225.92	1,651.17	2,576.94	16,405.06	9.50	2,156.58			1,318.91		233.62	333.53	879.27	845.68	28,192.78	53,484.17
Nov-19		112.20	1,015.61		94.51	1,478.76	2,525.13	12,487.51	2.58	1,521.24			1,424.92		63.46	304.67	949.94	648.91	22,627.44	42,836.87
Dec-19		253.96	1,231.01		201.91	1,914.32	1,980.76	14,784.72	6.24	2,006.30			1,160.16		98.90	343.84	773.44	705.09	25,420.65	50,154.20
Jan-20		55.07	1,249.39		106.49	1,703.06	1,690.94	16,534.95	8.07	2,188.91			1,367.09		130.82	237.15	911.39	849.88	27,033.21	54,677.41
Jan-20		86.84																	88.84	482.64
Feb-20			1,277.49		90.44	1,200.88	1,747.41	15,773.46	5.97	1,715.72			1,638.17		271.14	262.50	1,092.10	781.28	25,856.58	52,725.55
Feb-20		369.00																	369.00	1,429.10
Mar-20		524.92	1,851.82		304.00	1,505.33	2,825.05	21,140.41	8.94	2,367.85			1,243.58		275.73	259.51	829.04	1,173.83	34,309.81	72,489.59
Apr-20		321.89	1,168.53		106.14	458.53	1,803.29	17,289.23	3.35	1,699.88			877.19		269.34	446.99	584.79	799.25	25,828.00	57,218.32
May-20		179.60	1,432.57		102.85	1,919.83	3,000.93	16,227.54	7.48	1,814.94			1,435.35		120.51	1,021.46	956.89	530.78	28,750.73	57,212.46
Jun-20		404.33	881.60		104.50	1,288.13	2,914.65	17,198.06	3.77	2,387.83			1,001.58		134.33	234.67	667.72	943.69	28,184.86	63,830.80
TOTALS	0.00	2,764.51	15,386.52	0.00	1,706.18	17,649.63	27,300.00	198,459.71	80.82	21,471.33	0.00	0.00	15,422.81	0.00	2,211.46	4,793.56	10,281.80	9,477.47	327,005.80	668,258.30

0931000	0932000	0933000	0934000	0936000	0940000	0942000	0943000	0946000	0953000	0954000	0957000	0963000	TOTAL
179.59	38.58	127.99	516.25	22.80	7.57		3.80	0.63	0.54	457.81	341.94	503.67	29,563.85
153.90	29.40	109.50	450.26	3.80	7.02	1.69	7.58	4.43	1.50	389.74	284.38	440.04	24,687.85
159.73	50.01	96.02	444.30	4.93	11.32		8.85		22.97	436.05	294.56	483.22	27,101.77
149.54	27.18	94.88	434.03	5.32	11.36		12.23	2.53	10.18	408.51	280.25	450.70	25,291.39
122.62	48.69	51.31	370.92	8.73	3.83		1.25	0.63	4.91	335.71	237.98	378.83	20,209.43
143.57	41.70	110.14	383.41	3.80	8.16		16.45	1.90	8.05	374.54	275.05	427.78	24,733.55
166.82	49.10	45.88	225.09		15.91		0.62		7.22	396.87	303.73	448.35	27,644.20
	10.12	47.21	248.01	3.80	1.39		4.91		7.37				393.80
185.82										472.74	340.98	522.81	26,868.99
	68.42	90.41	536.12		26.42		8.39	1.14	11.56				1,060.10
194.46	72.29	115.96	539.42	4.18	18.93		8.44	0.38	13.68	442.79	349.92	485.62	38,179.78
155.89	53.88	95.60	433.16		26.86		3.20	0.38	8.85	401.81	289.87	444.70	31,390.32
143.64	44.99	55.34	458.39		9.26		1.51	0.38	4.21	378.42	271.70	417.62	28,461.73
221.61	82.13	125.14	620.98	15.20	19.13		9.48	0.38	15.10	559.39	408.88	600.21	35,665.94
1,977.19	616.49	1,165.36	5,660.34	72.56	167.16	1.69	86.71	12.78	116.14	5,054.36	3,679.24	5,601.55	341,252.50

6 9

648,55 1

0870000-000-000-000-1012-00	1456.74	
0870000-000-000-000-2061-00		1456.74
0871000-000-000-000-1012-00	4698.43	
0871000-000-000-000-2061-00		4698.43
0872000-000-000-000-1012-00	1230.54	
0872000-000-000-000-2061-00		1230.54
0874000-000-000-000-1012-00	308.09	
0874000-000-000-000-2061-00		308.09
0875000-000-000-000-1012-00	882.49	
0875000-000-000-000-2061-00		882.49
0883000-000-000-000-1012-00	342.32	
0883000-000-000-000-2061-00		342.32
0884000-000-000-000-1012-00	127.82	
0884000-000-000-000-2061-00		127.82
0889000-000-000-000-1012-00	195.53	
0889000-000-000-000-2061-00		195.53
0895000-000-000-000-1012-00	33.10	
0895000-000-000-000-2061-00		33.10
0901000-000-000-000-1012-00		
0901000-000-000-000-2061-00		
0902000-000-000-000-1012-00	329.60	
0902000-000-000-000-2061-00		329.60
0908000-000-000-000-1012-00	2526.09	
0908000-000-000-000-2061-00		2526.09
0912000-000-000-000-1012-00	1023.14	
0912000-000-000-000-2061-00		1023.14
0915000-000-000-000-1012-00	5.00	
0915000-000-000-000-2061-00		5.00
0916000-000-000-000-1012-00	26.50	
0916000-000-000-000-2061-00		26.50
0917000-000-000-000-1012-00		
0917000-000-000-000-2061-00		

0930000-000-000-000-1012-00	1838.44	
0930000-000-000-000-2061-00		1838.44
0931000-000-000-000-1012-00	227.17	
0931000-000-000-000-2061-00		227.17
0932000-000-000-000-1012-00	34.81	
0932000-000-000-000-2061-00		34.81
0933000-000-000-000-1012-00	122.93	
0933000-000-000-000-2061-00		122.93
0934000-000-000-000-1012-00	710.80	
0934000-000-000-000-2061-00		710.80
0935000-000-000-000-1012-00	0.21	
0935000-000-000-000-2061-00		0.21
0936000-000-000-000-1012-00	11.29	
0936000-000-000-000-2061-00		11.29
0940000-000-000-000-1012-00	8.77	
0940000-000-000-000-2061-00		8.77
0942000-000-000-000-1012-00	0.09	
0942000-000-000-000-2061-00		0.09
0943000-000-000-000-1012-00	4.35	
0943000-000-000-000-2061-00		4.35
0946000-000-000-000-1012-00	0.74	
0946000-000-000-000-2061-00		0.74
0947000-000-000-000-1012-00		
0947000-000-000-000-2061-00		
0950000-000-000-000-1012-00	2.34	
0950000-000-000-000-2061-00		2.34
0953000-000-000-000-1012-00	5.76	
0953000-000-000-000-2061-00		5.76
0954000-000-000-000-1012-00	639.32	
0954000-000-000-000-2061-00		639.32
0957000-000-000-000-1012-00	463.16	

0957000-000-000-000-2061-00		463.16
0959000-000-000-000-1012-00		
0959000-000-000-000-2061-00		
0961000-000-000-000-1012-00		
0961000-000-000-000-2061-00		
0962000-000-000-000-1012-00		
0962000-000-000-000-2061-00		
0963000-000-000-000-1012-00	764.48	
0963000-000-000-000-2061-00		764.48
0895000-000-000-000-2221-00	37291.42	
0895000-000-000-000-1012-00		37291.42

TREASURER JOURNAL 2018-2019		
X-ACCOUNTS	D	C
1005000-000-000-000-1012-00		
1005000-201-142-000-3900-98		
1005000-000-000-000-1012-00	2.72	
1005000-302-000-000-3360-85		2.72
1005000-000-000-000-1012-00	5496.47	
1005000-302-000-000-3400-14		5496.47
1005000-000-000-000-1012-00	3722.73	
1005000-302-000-000-3510-10		3722.73
1005000-000-000-000-1012-00	2.50	
1005000-302-000-000-3800-30		2.50
1005000-000-000-000-1012-00	89.86	
1005000-311-000-000-3400-10		89.86
1005000-000-000-000-1012-00	830.86	
1005000-311-000-000-3400-15		830.86
1005000-000-000-000-1012-00		
1005000-311-000-000-3360-85		
1005000-000-000-000-1012-00	4.31	
1005000-311-000-000-3800-30		4.31
1005000-000-000-000-1012-00	10447.97	
1005000-311-000-000-3510-10		10447.97
1005000-000-000-000-1012-00	1436.90	
1005000-311-000-000-3400-17		1436.90
1005000-000-000-000-1012-00	867.85	
1005000-314-000-000-3400-15		867.85
1005000-000-000-000-1012-00	12.50	
1005000-314-000-000-3400-17		12.50
1005000-000-000-000-1012-00	4950.00	
1005000-314-000-000-3400-90		4950.00
1005000-000-000-000-1012-00	126.19	
1005000-314-000-000-3400-99		126.19

1005000-000-000-000-1012-00	7576.48	
1005000-314-000-000-3510-10		7576.48
1005000-000-000-000-1012-00		
1005000-345-000-000-3300-00		
1005000-000-000-000-1012-00		
1005000-345-000-000-3350-00		
1005000-000-000-000-1012-00		
1005000-300-340-000-3405-20		
1005000-000-000-000-1012-00		
1005000-300-340-000-3405-22		
1005000-000-000-000-1012-00	140.89	
1005000-300-340-000-3510-10		140.89
1005000-000-000-000-1012-00		
1005000-300-442-000-3405-40		
1005000-000-000-000-1012-00		
1005000-300-340-000-3400-15		
1005000-000-000-000-1012-00	148.20	
1005000-336-000-000-3405-34		148.20
3544000-000-000-000-1012-00		
3544000-301-000-000-3360-50		
3544000-000-000-000-1012-00	9.00	
3544000-301-000-000-3400-11		9.00
3544000-000-000-000-1012-00		
3544000-301-000-000-3400-99		
3545000-000-000-000-1012-00	107.47	
3545000-301-000-000-3400-11		107.47
3545000-000-000-000-1012-00		
3545000-301-000-000-3360-50		
3547000-000-000-000-1012-00		
3547000-301-000-000-3400-11		
4042000-000-000-000-1012-00	85.34	
4042000-335-000-000-3400-99		85.34

4042000-000-000-000-1012-00	8971.76	
4042000-335-000-000-3405-30		8971.76
4042000-000-000-000-1012-00	40.29	
4042000-335-000-000-3405-31		40.29
4146000-000-000-000-1012-00	19.56	
4146000-335-000-000-3400-99		19.56
4146000-000-000-000-1012-00	291.60	
4146000-335-000-000-3510-99		291.60
4147000-000-000-000-1012-00	92.64	
4147000-335-000-000-3400-99		92.64
4147000-000-000-000-1012-00	265.09	
4147000-335-000-000-3405-33		265.09
4501000-000-000-000-1012-00	1544.93	
4501000-337-000-000-3400-14		1544.93
4502000-000-000-000-1012-00	864.44	
4502000-303-000-000-3400-14		864.44
4542000-000-000-000-1012-00	3.00	
4542000-333-000-000-3400-13		3.00
4559000-000-000-000-1012-00	154.33	
4559000-333-000-000-3400-14		154.33
4566000-000-000-000-1012-00	86.93	
4566000-333-000-000-3400-14		86.93
4574000-000-000-000-1012-00		
4574000-333-000-000-3400-16		
4578000-000-000-000-1012-00	159.73	
4578000-333-000-000-3400-14		159.73
4741000-000-000-000-1012-00	101.85	
4741000-314-000-000-3400-15		101.85
4840000-000-000-000-1012-00		
4840000-302-000-000-3400-16		
4841000-000-000-000-1012-00	159.73	

4841000-302-000-000-3400-14		159.73
4842000-000-000-000-1012-00	701.77	
4842000-302-000-000-3400-14		701.77
4844000-000-000-000-1012-00	64.61	
4844000-302-000-000-3400-14		64.61
4846000-000-000-000-1012-00	756.57	
4846000-302-000-000-3400-14		756.57
0895000-000-000-000-2221-00	50337.07	
0895000-000-000-000-1012-00		50337.07

TREASURER JOURNAL 2019-2020		
T-ACCOUNTS	D	C
0801000-000-000-000-1012-00	2635.91	
0801000-000-000-000-2061-00		2635.91
0802000-000-000-000-1012-00	1927.71	
0802000-000-000-000-2061-00		1927.71
0810000-000-000-000-1012-00	177.38	
0810000-000-000-000-2061-00		177.38
0811000-000-000-000-1012-00	31.77	
0811000-000-000-000-2061-00		31.77
0812000-000-000-000-1012-00	9535.74	
0812000-000-000-000-2061-00		9535.74
0813000-000-000-000-1012-00	2776.14	
0813000-000-000-000-2061-00		2776.14
0814000-000-000-000-1012-00	94.10	
0814000-000-000-000-2061-00		94.10
0833000-000-000-000-1012-00	8.40	
0833000-000-000-000-2061-00		8.40
0840000-000-000-000-1012-00	504.41	
0840000-000-000-000-2061-00		504.41
0847000-000-000-000-1012-00	1123.24	
0847000-000-000-000-2061-00		1123.24
0848000-000-000-000-1012-00	94.80	
0848000-000-000-000-2061-00		94.80
0849000-000-000-000-1012-00	3.58	
0849000-000-000-000-2061-00		3.58
0850000-000-000-000-1012-00	287.82	
0850000-000-000-000-2061-00		287.82
0855000-000-000-000-1012-00	44.19	
0855000-000-000-000-2061-00		44.19
0857000-000-000-000-1012-00	26.18	
0857000-000-000-000-2061-00		26.18

41-2421. Enhanced collections; allocation of monies; criminal justice entities

A. Notwithstanding any other law and except as provided in subsection J of this section, five per cent of any monies collected by the supreme court and the court of appeals for the payment of filing fees, including clerk fees, diversion fees, fines, penalties, surcharges, sanctions and forfeitures, shall be deposited, pursuant to sections 35-146 and 35-147, and allocated pursuant to the formula in subsection B of this section. This subsection does not apply to monies collected by the courts pursuant to section 16-954, subsection A, or for child support, restitution or exonerated bonds.

B. The monies deposited pursuant to subsection A of this section shall be allocated according to the following formula:

1. 21.61 per cent to the state aid to county attorneys fund established by section 11-539.

2. 20.53 per cent to the state aid to indigent defense fund established by section 11-588.

3. 57.37 per cent to the state aid to the courts fund established by section 12-102.02.

4. 0.49 per cent to the department of law for the processing of criminal cases.

C. Notwithstanding any other law and except as provided in subsection J of this section, five per cent of any monies collected by the superior court, including the clerk of the court and the justice courts in each county for the payment of filing fees, including clerk fees, diversion fees, adult and juvenile probation fees, juvenile monetary assessments, fines, penalties, surcharges, sanctions and forfeitures, shall be transmitted to the county treasurer for allocation pursuant to subsections E, F, G and H of this section. This subsection does not apply to monies collected by the courts pursuant to section 16-954, subsection A or for child support, restitution or exonerated bonds.

D. The supreme court shall adopt guidelines regarding the collection of revenues pursuant to subsections A and C of this section.

E. The county treasurer shall allocate the monies deposited pursuant to subsection C of this section according to the following formula:

1. 21.61 per cent for the purposes specified in section 11-539.

2. 20.53 per cent for the purposes specified in section 11-588.

3. 57.37 per cent to the local courts assistance fund established by section 12-102.03.

4. 0.49 per cent to the state treasurer for transmittal to the department of law for the processing of criminal cases.

F. The board of supervisors in each county shall separately account for all monies received pursuant to subsections C and E of this section and expenditures of these monies may be made only after the requirements of subsections G and H of this section have been met.

G. By December 1 of each year each county board of supervisors shall certify if the total revenues received by the justice courts and the superior court, including the clerk of the superior court, exceed the amount received in fiscal year 1997-1998. If the board so certifies, then the board shall distribute the lesser of either:

1. The total amount deposited pursuant to subsection C of this section.

2. The amount collected and deposited pursuant to subsection C of this section that exceeds the base year collections of fiscal year 1997-1998. These monies shall be distributed according to the formula specified in subsection E of this section. Any monies remaining after this allocation shall be transmitted as otherwise provided by law.

H. If a county board of supervisors determines that the total revenues transmitted by the superior court, including the clerk of the superior court and the justice courts in the county, do not equal the base year collections transmitted in fiscal year 1997-1998 the monies specified in subsection C of this section shall be transmitted by the county treasurer as otherwise provided by law.

I. For the purposes of this section, base year collections shall be those collections specified in subsection C of this section.

J. Monies collected pursuant to section 12-116.01, subsection B shall be allocated as follows:

1. 15.44 per cent to the state aid to county attorneys fund established by section 11-539.

2. 14.66 per cent to the state aid to indigent defense fund established by section 11-588.

3. 40.97 per cent to the state aid to the courts fund established by section 12-102.02.

4. 0.35 per cent to the department of law for the processing of criminal cases.

5. 14.29 per cent to the Arizona criminal justice commission for distribution to state, county and municipal law enforcement full service forensic crime laboratories pursuant to rules adopted by the Arizona criminal justice commission.

6. 14.29 per cent to the supreme court for allocation to the municipal courts pursuant to subsection K of this section.

K. The supreme court shall administer and allocate the monies received pursuant to subsection J, paragraph 6 of this section to the municipal courts based on the total amount of surcharges transmitted pursuant to section 12-116.01 by that jurisdiction's city treasurer to the state treasurer for the prior fiscal year divided by the total amount of surcharges transmitted to the state treasurer pursuant to section 12-116.01 by all city treasurers statewide for the prior fiscal year. The municipal court shall use the monies received to improve, maintain and enhance the ability to collect and manage monies assessed or received by the courts, to improve court automation and to improve case processing or the administration of justice. The municipal court shall submit a plan to the supreme court and the supreme court shall approve the plan before the municipal court begins to spend these allocated monies.

ARF-6280 **Regular Agenda Item 4. J.**

Regular BOS Meeting

Meeting Date: 10/06/2020
Submitted For: Mary Springer, Finance Director
Submitted By: Mary Springer, Finance Director
Department: Finance

Information

Request/Subject

Information/ Discussion regarding draft Policy No. BOS-FIN-118-*Public Safety Personnel Retirement System Contingency Reserve Funding.*

Background Information

The Board of Supervisors held a public hearing on September 22, 2020, as required by Arizona Revised Statute § 11-391 in advance of securing debt to pay off the unfunded liability of the Public Safety Personnel Retirement System (PSPRS) for the Sheriff's Office Correctional Officer Retirement Plan (CORP) for Detention Officers and Non-Uniformed Officers, and CORP for Dispatchers. Policy No. BOS-FIN-118-*Public Safety Personnel Retirement System Contingency Reserve Funding* sets up contingency funding to ensure the County's Public Safety Retirement System Pension Plans remain fully or mostly funded in the event of a market or actuarial change that affects contribution rates. The Contingency Reserve Fund would be established with existing County assets.

Evaluation

Staff and consultants have prepared the draft policy for information and discussion.

Conclusion

Staff is providing the draft policy to the Board of Supervisors for information and discussion.

Recommendation

Staff is providing the draft policy to the Board of Supervisors for information and discussion.

Suggested Motion

Information/Discussion to review draft Policy No. BOS-FIN-118-*Public Safety Personnel Retirement System Contingency Reserve Funding*. **(Mary Springer)**

Attachments

BOS-FIN-118 Draft Policy

---

1. PURPOSE

The purpose of this policy is to set forth the rules for managing the Contingency Reserve Fund ("CRF") effectively. The goal is to mitigate the impact of 1) investment return volatility and 2) changes in select actuarial assumptions (as defined herein) made within the Plans.

2. DEFINITIONS

A. Unfunded Actuarial Accrued Liability (UAAL) - Is the difference between trust assets and the estimated future cost of pensions earned by employees.

B. Annual Required Contribution (ARC) - Is the annual amount required to pay into the pension funds, as determined through annual actuarial valuations. It is comprised of two primary components: normal pension cost - which is the estimated cost of pension benefits earned by employees in the current year; and, amortization of UAAL - which is the cost needed to cover the unfunded portion of pensions earned by employees in previous years. The UAAL is collected over a period of time referred to as the amortization period. The ARC is a percentage of the current payroll.

C. Funded Ratio - Is a ratio of fund assets to actuarial accrued liability.

D. Plans – Legacy Tier 1 and Tier 2 Public Safety Personnel Retirement System (PSPRS) Sheriff, Corrections Officer Retirement Plan (CORP) Detention and Dispatch.

3. ESTABLISHMENT OF CONTINGENCY RESERVE FUND

A. The County is establishing one CRF for the purposes of managing all three Plans.

B. The initial deposit for the CRF will be funded with existing County reserves. Sizing of the CRF is discussed further below in this policy.

C. The County has the option to create three distinct CRFs and manage each CRF separately, in order to match the deposits and draws based on each

DRAFT

Plan's changes. However, because the CRF is being established through existing assets and not through borrowing, it does not need to be tied to each respective liability. Each Plan's changes are summarized by the respective actuaries on an annual basis at the end of the fiscal year, and the County receives a copy of the annual reports.

Consistent with the PSPRS Actuarial Funding Policy, the Board's PSPRS funding ratio is to maintain to the greatest extent possible the goal of 100% (fully funded).

4. RULES FOR INVESTMENTS

A. The County will be managing and investing the CRFs. Investments made by the County must comply with the requirements found in Arizona Revised Statutes Section 35-323 and the County's Investment Policy.

B. Investments shall be principal protected so that the County does not lose value in the deposited amounts.

C. Gross funded by principal deposits; shall not include expected investment earnings.

D. Investments shall be invested in no more than one-year increments to allow for liquidity in the 1st quarter of each calendar year.

E. Proceeds should only be invested in liquid and/or short-term products to ensure prompt availability of funds.

F. The County will prioritize the investments of these funds with a local bank.

G. The County may have the opportunity to utilize a pension stabilization trust to manage investment of CRF proceeds. These are irrevocable trusts created under Internal Revenue Service Section 115.

5. RULES FOR CONTINGENCY RESERVE FUND DRAWS

A. The County will establish a minimum fund balance threshold based on the initial deposit into the CRF.

B. Draws will first be made from investment income only, while the principal balance remains untouched.

C. Establish a funded ratio threshold, where if the CRF balance rises 5% above the minimum fund balance and the Plans are fully funded, the County may draw all or a portion of the 5% to supplement the County's annual required employer contribution for the Plans.

D. Market Draw: The County may draw from a CRF when investment return for the Plans for the prior fiscal year is below the actuarial rate of return.

E. Actuarial Draw: The County may draw from a CRF when the annual reports for the Plans show a revision of the assumed earnings rate assumption, changes to payroll growth assumption, and/or revisions to mortality assumption occur and cause an impact on Unfunded Actuarial Accrued Liability for the Plans in excess of a defined threshold.

6. RULES FOR REPLENISHMENT OF CONTINGENCY RESERVE FUNDS

A. After the fiscal year of bond issuance and for the following five fiscal years of the bonds, the County shall only commit savings derived from the issuance of the Bonds to help pay one time operational costs of the General Fund so that should the CRF fall below minimum fund requirements in a given fiscal year, savings may be used to replenish the CRF.

B. The County will review unspent budget appropriations for PSPRS and CORP pension expenditures annually and may consider adding to the CRF.

C. Should the CRF balance fall below the minimum fund balance, the County will prioritize making replenishments over no more five years.

7. SIZING OF CONTINGENCY RESERVE FUND

A. The County will review the CRF funding levels at least every five years to ensure adequate reserves.

B. Size initial deposit to manage "worst case" scenario of all permitted draw events (market volatility and actuarial changes) occurring in one valuation

in the amount of $1,500,000.

i. Market. size initial deposit to calculated on the average of a 10% market loss and up to three years of new Unfunded Actuarial Accrued Liability ("UAAL") payments that would be created if PSPRS and/or CORP experienced 20% loss compared to the average earnings rate in year 1 of issuing pension bonds.

ii. Actuarial. Size initial deposit to manage up to three years of new UAAL payments that would be created if the assumed earnings rate was revised to 7%, payroll growth increased and/or PSPRS/CORP adopted a new mortality table.

8. RULES TO DISSOLVE CONTINGENCY RESERVE FUND

A. Upon the repayment of the final debt service payment for the Bonds, staff will seek Board of Supervisor direction to dissolve or continue the CRF. The County could dissolve the CRF and apply the remaining balance of funds to other retiree benefits, other post-employment benefits (OPEB), annual required contributions or General Fund.

DRAFT

SIGNATURE:

_____ _____

CHAIRMAN, BOARD OF SUPERVISORS **DATE**

ARF-6257 **Consent Agenda Item 5. A.**

Regular BOS Meeting

Meeting Date:	10/06/2020		
Submitted For:	Bradley Beauchamp, County Attorney		
Submitted By:	Athena Gooding, Legal Secretary, Lead		
Department:	County Attorney		
Fiscal Year:	2021	Budgeted?:	Yes
Contract Dates Begin & End:	July 1, 2020 - June 30, 2021	Grant?:	No
Matching Requirement?:	No	Fund?:	Renewal

Information

Request/Subject

FY 2021 Victims' Rights Program Award Agreement No. 2021-004 with the Office of the Attorney General.

Background Information

Monies are distributed and received by the Attorney General pursuant to A.R.S. 41-2401 and A.R.S. 8-418 and constitute a continuing appropriation. These monies are also subject to legislative appropriation. The allocated funding received from the Attorney General's Office provides for salary and employee-related expenses of a full-time Victim-Advocate/Notification Clerk within the Gila County Attorney's Office. FY 2021 award in the amount $23,300 has no financial impact on Gila County and requires no matched funds from the County.

Evaluation

The award of $23,300 is used to cover existing employee salaries and employee-related expenses commencing July 1, 2020, and terminating on June 30, 2021. The funding agreement is used to support the costs of implementing victims' rights laws mandated by the provisions of Arizona Revised Statutes Title 13, Crime Victims' Rights, and Title 8, Victims' Rights for Juvenile Offenses.

Conclusion

The intent of the program funds is two-fold: 1) To provide financial support to the Gila County Attorney's Office charged with performing the duties under A.R.S. Title 13 and A.R.S. Title 8, and 2) to encourage efficient and effective use of resources to meet statutory requirements aimed at ensuring victims' rights and access to justice. Mandated services provided to victims include, but are not limited to notification of all court hearings, court escorts, victim compensation, provide emotional support, assist in transportation, scheduling interviews with prosecutors, and to assist with any other social service needs. These funds are essential to carrying out these duties.

Recommendation

It is recommended by the Gila County Attorney that the Board accept and approve the FY 2021 Victims' Rights Program Award Agreement No. AG No. 2021-004 in the amount of $23,300 for the salary/benefits of a full-time Victim Advocate in the County Attorney's Office.

Suggested Motion

Approval of FY 2021 Victims' Rights Program Award Agreement No. AG No. 2021-004 between the Gila County Attorney's Office and the Arizona Attorney General's Office in the amount of $23,300 to cover the existing salary and employee-related expenses for a full-time advocate for the period July 1, 2020, through June 30, 2021.

Attachments

Award Agreement FY 2021

State of Arizona
Office of the Attorney General
FY 2021 Victims' Rights Program
AWARD AGREEMENT
A.G. #: 2021-004

RECIPIENT

Name:	Gila County Attorney's Office
Contact:	Debra Blair
Address:	1400 East Ash Street, Globe, AZ 85501
Award Amount:	$23,300.00
Purpose:	To support the direct costs of implementing victims' rights laws pursuant to those provisions of Arizona Revised Statutes Title 13, Chapter 40 and Title 8, Chapter 3, Article 7 impacting County Attorney as an entity type.

Monies having been deposited and received by the Attorney General pursuant to Arizona Revised Statutes § 41-2401, § 8-418 and legislative appropriations, this AGREEMENT is made under the authority of the Attorney General pursuant to Arizona Revised Statutes § 41-191.08 -- Victims' Rights Fund.

This AGREEMENT is made this first day of July 2020, by and between the Arizona Attorney General, and the Gila County Attorney's Office, the "Contractor", to commence on July 1, 2020 and terminate June 30, 2021. The Attorney General, having been satisfied as to the qualifications of Contractor, agrees to pay Contractor the above shown $23,300.00 subject to Contractor's agreement as follows:

I. The Contractor agrees:

A. Award funds will not be used to supplant state, local and federal funds that would otherwise be available to provide services to victims of crime as mandated by A.R.S. Title 13, Chapter 40 and Title 8, Chapter 3, Article 7

B. Award funds will be used only for allowable costs that can be proven necessary and essential to effect the direct provision or performance of those statutorily mandated victims' rights duties (services), as described in the *Victims' Rights Program Guidelines - Section IV Allowable and Non-Allowable Costs*, and as specified in Contractor's approved $23,300.00 award budget as follows:

Personnel:	$23,300.00	ERE/Benefits: $	
Title:	Legal Secretary/Victim Advocate	Percent:	57.8%
Consulting:	$0.00	N/A	
Operating:	$0.00	N/A	
Equipment:	$0.00	N/A	

C. To complete and submit, on or before August 13, 2021, an annual report to the Attorney General as prescribed in A.R.S. § 41-191.08(F).

D. To comply with FY 2021 Victims' Rights Program Guidelines, as well as the applicable provisions of A.R.S. Title 13, Chapter 40 and A.R.S. Title 8, Chapter 3, Article 7.

E. To allow (a) representative(s) of the Attorney General to complete program and financial audits as the Attorney General believes necessary to ensure Contractor compliance with this agreement and with State law.

F. To retain all records relating to the agreement, and performance under the agreement, for a period of five years after the completion of the project, and to allow inspection and audit of all such documents at reasonable times, pursuant to A.R.S. §§ 35-214 and 35-315.

G. To comply with all applicable nondiscrimination requirements of A.R.S. § 41-1463, Arizona State Executive Order 2009-09, and all other applicable state and federal civil rights laws.

H. Each party hereby warrants its compliance with all federal immigration laws and regulations that relate to its employees and A.R.S. § 23-214(A). If either party uses any subcontractors in performance of this contract, subcontractors shall warrant their compliance with all federal immigration laws and regulations that relate to its employees and A.R.S. § 23-214(A). A breach of this warranty shall be deemed a material breach of the contract subject to penalties up to and including termination of this contract. Each party retains the legal right to inspect the papers of the other party and its subcontractors who work on the contract to ensure that the other or subcontractors are complying with this warranty.

I. To retain ownership interest in all equipment acquired with VRP funds (or in the proceeds resulting from the sale of such equipment) provided that: (1) the equipment purchase was not in violation of the VRP Award Agreement; and (2) the useful life of the equipment in question has not elapsed.

II. It is further agreed between the parties as follows:

A. To use arbitration in the event of disputes to the extent required by A.R.S. § 12-1518.

B. Except as provided in paragraph C below, if the Attorney General finds that the Contractor has not complied with the requirements of this agreement, the Contractor will receive a notice which identifies the area(s) of non-compliance and the appropriate corrective action to be taken. If the Contractor does not respond within thirty calendar days to this notice, or does not provide sufficient information concerning the steps which are being taken to correct the problem, the Attorney General may terminate the contract and require the return of all funds which are found to have been spent in violation of this agreement.

C. The parties agree to meet and confer in good faith to resolve disputes before commencing formal proceedings of any nature.

D. The Attorney General may reduce or discontinue funding to the Contractor in subsequent fiscal years, at the Attorney General's discretion, for the Contractor's failure to complete and submit, on or before August 13, 2021, the report that is required pursuant to A.R.S. § 41-191.08(F) or for other reasons such as available funding.

E. Every payment obligation of the Attorney General under this Agreement is conditioned upon the availability of funds appropriated or allocated for the payment of such obligation. If funds are not allocated and available for the continuance of this Agreement, this Agreement may be terminated by the Attorney General at the end of the period for which funds are available. No liability shall accrue to the Attorney General in the event this provision is exercised, and the Attorney General shall not be obligated or liable for any future payments or for any damages as a result of termination under this paragraph.

F. Any and all award funds not expended by June 30, 2021, will be returned to the Attorney General.

G. This agreement is subject to cancellation pursuant to A.R.S. § 38-511.

IN WITNESS WHEREOF, the parties have made and executed this AGREEMENT on the day and year first above written.

FOR THE ATTORNEY GENERAL: _____ Jerry Connolly, Procurement Manager _____ Date:

FOR THE CONTRACTOR:

_____ Authorized Signature _____ Date: _____ Printed Name and Title

ATTEST: **APPROVED AS TO FORM:**

_____ Clerk of the Governing Board *(if applicable)* _____ Date: _____ Legal Counsel *(if applicable)* _____ Date:

ARF-6286 **Consent Agenda Item 5. B.**

Regular BOS Meeting

Meeting Date:	10/06/2020		
Submitted For:	Jefferson Dalton, Deputy County Attorney, Civil Bureau Chief		
Submitted By:	Athena Gooding, Legal Secretary, Lead		
Department:	County Attorney		
Fiscal Year:	2021	Budgeted?:	Yes
Contract Dates Begin & End:	July 1, 2020 to June 30, 2021	Grant?:	Yes
Matching Requirement?:	No	Fund?:	Renewal

Information

Request/Subject

Approval of Arizona Criminal Justice Commission Crime Victim Compensation Grant Agreement No. VC-21-052.

Background Information

Agreement No. VC-21-052 – The Crime Victim Compensation Program receives its funding through three state sources and one federal source. Program monies are appropriated each year by the state legislature and state funds are distributed to each county based upon a formula approved annually by the Commission. These funds are used to provide compensation awards to victims of criminally injurious conduct occurring within Gila County jurisdiction. Gila County's allotment for FY 2021 is $53,189 and this grant has no financial impact on the County. The funding will be distributed to the Gila County Attorney's Office as a monthly reimbursement of compensation program expenditures. A financial reimbursement request form is required for reimbursement of those expenditures.

Evaluation

Agreement No. VC-21-052 - The Arizona Criminal Justice Commission Crime Victim Compensation Grant is essential to provide financial assistance to victims of crime in Gila County for medical and dental expenses, mental health expenses, wage loss, funeral expenses, and crime scene clean-up expenses based on program rules and requirements. The maximum award to a claimant is $15,100 for all economic loss sustained

as a result of a particular incident of criminal conduct.

Conclusion

Agreement No. VC-21-052 - Claims are filed by victims of criminally injurious conduct in the county in which the crime occurred. The Gila County Victim Compensation Coordinator investigates each claim filed and then presents the claim to the volunteer Crime Victim Compensation Board for review. The Board approves or denies each compensation claim in accordance with program rules. The Victim Compensation Program would not exist without these state and federal funds and it is a vital program in the Gila County Attorney's Office.

Recommendation

The Gila County Attorney's Office recommends that the Gila County Board of Supervisors approve the Arizona Criminal Justice Commission Crime Victim Compensation Grant Agreement No. VC-21-052 for FY 2021 in the amount of $53,189.

Suggested Motion

Approval of Arizona Criminal Justice Commission FY 2021 Victim Compensation Program Grant Agreement No. VC-21-052 in the amount of $53,189 for the period of July 1, 2020 to June 30, 2021.

Attachments

Victim Compensation Grant VC-21-052 Letter

Victim Conpensation Grant VC-21-052

DocuSign Envelope ID: 8E3C152B-1E54-4974-BCFC-DDDE7DEFDBE9

Arizona Criminal Justice Commission

Chairperson
SHEILA POLK
Yavapai County Attorney

Vice-Chairperson
STEVE STAHL, Chief
Law Enforcement Leader
City of Maricopa Police Department

ALLISTER ADEL
Maricopa County Attorney

MARK BRNOVICH
Attorney General

DAVID K. BYERS, Director
Administrative Office of the Courts

BARBARA LAWALL
Pima County Attorney

GREG MENGARELLI, Mayor
City of Prescott

HESTON SILBERT, Director
Department of Public Safety

MARK NAPIER
Pima County Sheriff

PAUL PENZONE
Maricopa County Sheriff

DAVID SANDERS
Pima County Chief Probation Officer

DAVID SHINN, Director
Department of Corrections

C.T. WRIGHT, Chairperson
Board of Executive Clemency

VACANT
County Supervisor

VACANT
Former Judge

VACANT
Sheriff

VACANT
Chief

VACANT
Chief

VACANT
Chief

Executive Director
Andrew T. LeFevre

1110 West Washington, Suite 230
Phoenix, Arizona 85007
PHONE: (602) 364-1146
FAX:(602) 364-1175
www.azcjc.gov

June 26, 2020

Honorable Bradley D. Beauchamp
Gila County Attorney's Office
1400 E. Ash Street
Globe, Arizona 85501

Re: Victim Compensation Grant Number VC-21-052

Dear: Mr. Bradley D. Beauchamp

On March 26, 2020 the Arizona Criminal Justice Commission (ACJC) designated the County Attorneys' Offices as operational units to administer the Crime Victim Compensation Program for State fiscal year 2021. On March 26, 2020 the Commission also approved the allocation of $3,273,346.00 in state and federal crime victim compensation funds to county programs for FY 2021. The total amount allocated Gila County Attorney's Office includes the following:

ACJC (State Funding)*	$53,189.00
VOCA (Federal Funding)*	$0.00
TOTAL ALLOCATION	$53,189.00

*Estimated Level

The allocation of state funding to the Gila County Attorney's Office compensation program includes $15,100.00 to help cover administration costs of the program in accordance with the budget in the grant agreement. For a summary of administrative expenses please refer to the administrative fund guidelines established by ACJC. Any question about administrative expense eligibility should be directed to ACJC compensation program staff.

For FY 2021, all compensation benefits funding will be distributed through a monthly reimbursement process. ACJC program staff can allow upfront payments of compensation program administrative funds on a case by case basis to programs demonstrating an urgent need and have submitted a written request. All payments will be made through the Automated Clearing House Vendor Payments (direct deposit).

Please find the included Grant Agreement, with instructions for obtaining signatures and formal action. Please return the agreement with authorized signatures to the Commission office within 90 days of the award date of July 1, 2020 or the agreement may be cancelled.

If you have any questions concerning this program you may contact me at 602-364-1177.

Sincerely,

Dorinda Johns, Program Coordinator
Crime Victim Services

Our mission is to continuously address, improve, sustain and enhance public safety in the State of Arizona through the coordination, cohesiveness, and effectiveness of the Criminal Justice System

DocuSign Envelope ID: 8E3C152B-1E54-4974-BCFC-DDDE7DEFDBE9

ARIZONA CRIMINAL JUSTICE COMMISSION
CRIME VICTIM COMPENSATION PROGRAM
GRANT AGREEMENT

ACJC Grant Number VC-21-052

The following information is provided pursuant to 2 C.F.R. § 200.331(a)(1):

Grantee Name: Gila County Attorney's Office
Grantee's DUNS Number: 074462102
Grantee Period of Performance Start and End Date: 07/01/2020 TO 06/30/2021
Amount of Federal Funds Obligated by this Agreement: $0.00
Total Amount of Federal Funds Obligated to the Grantee: $ 0.00
Indirect Cost Rate used by the Grantee under this Agreement: 0%

CFDA Number and Name: 16.576 – Crime Victim Compensation Program
Name of Federal Awarding Agency: Department of Justice, Office of Justice Programs
Total Amount of the Federal Award in this Agreement: $1,278,000
Federal Award Identification Number (FAIN): 2019-VI-GX-0053
Federal Award Date: 09/13/2019

Federal Award Project Description:
Funds under this program shall be used by the states for awards of compensation benefits to crime victims. The primary purpose of this grant is to supplement state efforts to provide financial compensation to crime victims for costs resulting from crime, and to encourage victim cooperation and participation in the criminal justice system.

Name of Pass-Through Entity: Arizona Criminal Justice Commission
Contact Information for Pass-Through Entity: Arizona Criminal Justice Commission, 1110 W. Washington Street, Suite 230, Phoenix, AZ, 85007
Identification of Whether the Award is Research and Development: No
Indirect Cost Rate for the Federal Award: 0%

DocuSign Envelope ID: 8E3C152B-1E54-4974-BCFC-DDDE7DEFDBE9

This Grant Agreement is made this first day of July, 2020 by and between the ARIZONA CRIMINAL JUSTICE COMMISSION hereinafter called "COMMISSION" and Gila County Attorney's Office, hereinafter called "GRANTEE". The COMMISSION enters into this Agreement pursuant to its authority under the provisions of A.R.S. § 41-2405 (B)(6), and having satisfied itself as to the qualification of GRANTEE;

NOW, THEREFORE, it is agreed between the parties as follows:

1. This Agreement will commence on July 1, 2020 and terminate on June 30, 2021. This Agreement expires at the end of the award period unless prior written approval for an extension has been obtained from the COMMISSION. A request for an extension must be received by the COMMISSION sixty (60) days prior to the end of the award period. The COMMISSION in its sole discretion may approve an extension that furthers the goals and objectives of the program and shall determine the length of any extension.

2. GRANTEE agrees that grant funds will be used in accordance with applicable program rules, guidelines and special conditions.

3. The COMMISSION will monitor GRANTEE performance against program goals and performance standards and those outlined in the grant application. Substandard performance as determined by the COMMISSION will constitute noncompliance with this Agreement. If the COMMISSION finds noncompliance, the GRANTEE will receive a written notice which identifies the area of noncompliance, and the appropriate corrective action to be taken. If the GRANTEE does not respond within thirty (30) calendar days to this notice, and does not provide sufficient information concerning the steps which are being taken to correct the problem, the COMMISSION may suspend funding, permanently terminate this Agreement or revoke the grant.

4. Any deviation or failure to comply with the purpose and/or conditions of this Agreement without prior written COMMISSION approval may constitute sufficient reason for the COMMISSION to terminate this Agreement, revoke the grant, require the return of all unspent funds, perform an audit of expended funds, and require the return of any previously spent funds which are deemed to have been spent in violation of the purpose or conditions of this grant.

5. This Agreement may be modified only by a written amendment signed by the Executive Director or by persons authorized by the Executive Director on behalf of the COMMISSION and GRANTEE. Any notice given pursuant to this Agreement shall be in writing and shall be considered to have been given when actually received by the following addressee or their agents or employees:

   I. If to the COMMISSION:

   Arizona Criminal Justice Commission
   1110 W. Washington Street, Suite 230
   Phoenix, Arizona 85007
   Attn: Program Manager

DocuSign Envelope ID: 8E3C152B-1E54-4974-BCFC-DDDE7DEFDBE9

B. If to the GRANTEE:

Gila County Attorney's Office
1400 E. Ash Street
Globe, Arizona, 85501
Attn: The Honorable Bradley D. Beauchamp

6. For grant awards above $100,000, GRANTEE may make budget adjustments of up to ten (10) percent of the total grant within any approved budget category excluding equipment. Written approval from the COMMISSION in advance is required if GRANTEE wishes to make adjustments or reprogram in excess of ten (10) percent or if GRANTEE wishes to purchase equipment not previously approved.

   For grant awards less than $100,000, the GRANTEE may make budget adjustments within approved categories excluding equipment as long as there are no changes to the purpose or scope of the project. If GRANTEE wishes to purchase equipment not previously approved, written approval from the COMMISSION in advance is required.

APPROVED LINE ITEM PROGRAM BUDGET	
Personnel:	
Salaries	$0.00
Fringe Benefits (for salaries/overtime)*	$0.00
Overtime	$0.00
Professional & Outside/Consultant & Contractual Services	$0.00
Travel In-State	$4,500.00
Travel Out-of-State	$0.00
Victim Compensation	$38,089.00
Operating Expenses:	
Supplies	$7,500.00
Registration/Training	$0.00
Other	$3,100.00
Equipment	
Capital	$0.00
Noncapital	$0.00
TOTAL	$53,189.00
Positions Funded: N/A Equipment Type: N/A	

*Reference the ACJC Grant Management Manual for definition of approved Fringe Benefit

7. The total to be paid by the COMMISSION under this Agreement shall not exceed $0.00 in federal funds awarded to the COMMISSION by the U.S. Department of Justice (USDOJ), Office of Justice Programs (OJP) and $53,189.00 in State Funds.

8. Every payment obligation of the COMMISSION under this Agreement is conditioned upon the availability of funds appropriated or allocated for the payment of such obligation. If funds are not allocated and available for the continuance of this Agreement, this Agreement may be terminated by the COMMISSION. No liability shall accrue to the COMMISSION in the event this provision is exercised, and the COMMISSION shall not be obligated or liable for any future payments or for any damages as a result of termination under this paragraph.

9. GRANTEE agrees that if it currently has an active award of federal funds or if it receives any other award of federal funds during the period of performance for this award, and those award funds have been, are being or are to be used, in whole or in part, for one or more of the identical cost items for which funds are being provided under this award, GRANTEE will

DocuSign Envelope ID: 8E3C152B-1E54-4974-BCFC-DDDE7DEFDBE9

promptly notify, in writing, the COMMISSION, of the potential of duplication, and if so requested by the COMMISSION, seek a budget modification or change-of-project-scope grant adjustment notice (GAN) to eliminate any inappropriate duplication of funding.

10. GRANTEE agrees to retain all books, account reports, files and other records, (paper and/or electronic) relating to this Agreement and the performance of this Agreement for no less than five (5) years from the last financial report submitted to the COMMISSION. All such documents shall be subject to inspection and audit at reasonable times, including such records of any subgrantee, contractor, or subcontractor. GRANTEE also understands and agrees that USDOJ and the United States General Accounting Office (USGAO) are authorized to interview any officer or employee of the GRANTEE (or of any subgrantee, contractor, or subcontractor) regarding transactions related to this award.

11. GRANTEE agrees that activities funded under this award will be closely coordinated with related activities supported with Office of Justice Programs (OJP), State, local or tribal funds. Grant funds may only be used for the purposes in the GRANTEE's approved application. GRANTEE shall not undertake any work or activities not described in the grant application, including staff, equipment, or other goods or services without prior approval from the COMMISSION.

12. GRANTEE agrees to track, account for, and report on all funds (including specific outcomes and benefits) separately from all other funds for the same or similar purposes or programs.

    Accordingly, the accounting systems of GRANTEE and all subgrantees must ensure that funds from this award are not commingled with funds from any other source.

13. GRANTEE agrees to abide by Federal and State laws and provide accounting, auditing and monitoring procedures to safeguard grant funds and keep such records to assure proper fiscal controls, management and the efficient disbursement of grant funds.

14. For the purposes of this grant, a capital expenditure means expenditures to acquire capital assets, as defined in 2 C.F.R. 200.12, or expenditures to make additions, improvements, modifications, replacements, rearrangements, reinstallations, renovations, or alterations to capital assets that materially increase their value or useful life, with a cost of $5,000 or greater. If the GRANTEE's capitalization policy defines a capital expenditure as less than $5,000, the GRANTEE will follow its own policy.

15. GRANTEE agrees to maintain property records for equipment purchased with grant funds and perform a physical inventory and reconciliation with property records at least every two years or more frequently if required by GRANTEE policy. GRANTEE agrees that funds will not be used for the construction of new facilities.

16. GRANTEE agrees to follow equipment disposition policies outlined in 2 C.F.R. 200.313(e)(1) through (4*Uniform Administrative Requirements for Grants and Cooperative Agreements-Equipment*, when the equipment is no longer needed for the grant program.
    Link: *e-CFR Navigation Aid:* http://www.ecfr.gov/cgi-bin/ECFR?page=browse

17. GRANTEE agrees that all salaried personnel (including subgrantee personnel) whose activities are to be charged to the award will maintain timesheets or certifications to document hours worked for activities related to this award and non-award related activities. GRANTEE agrees to keep time and attendance sheets for hourly employees signed by the employee and supervisory official having firsthand knowledge of the work performed by the grant-funded employees.

DocuSign Envelope ID: 8E3C152B-1E54-4974-BCFC-DDDE7DEFDBE9

18. GRANTEE agrees that it will submit financial and activity reports to the COMMISSION in a format provided by the COMMISSION, documenting the activities supported by these grant funds and providing an assessment of the impact of these activities which may include documentation of project milestones. In the event reports are not received on or before the indicated date(s), funding may be suspended until such time as delinquent report(s) are received.

19. These reports are to be submitted according to the following schedule(s):

ACTIVITY REPORTS	
Report Period:	**Due Date:**
July 1 to September 30	October 25
October 1 to December 31	January 25
January 1 to March 31	April 25
April 1 to June 30	July 25

FINANCIAL REPORTS			
Report Period:	**Due Date:**	**Report Period:**	**Due Date:**
July 1 – July 31	August 25	January 1 – January 31	February 25
August 1 – August 31	September 25	February 1 – February 29	March 25
September 1 – September 30	October 25	March 1 – March 31	April 25
October 1 – October 31	November 25	April 1 – April 30	May 25
November 1 – November 30	December 25	May 1 – May 31	June 25
December 1 – December 31	January 25	June 1 – June 30	July 25

Additional reporting requirements may be required for GRANTEES who are considered high risk.

20. GRANTEE understands that financial reports are required as an accounting of expenditures for either reimbursement or COMMISSION-approved advance payments.

21. The final request for reimbursement of grant funds must be received by the COMMISSION no later than sixty (60) days after the last day of the award period.

22. All goods and services must be received or have reasonable expectations thereof and placed in service by GRANTEE by the expiration of this award.

23. GRANTEE agrees that all encumbered funds must be expended and that goods and services must be paid by GRANTEE within sixty (60) days of the expiration of this award.

24. GRANTEE agrees to remit all unexpended grant funds to the COMMISSION within thirty (30) days of written request from the COMMISSION.

25. GRANTEE agrees to account for interest earned on federal grant funds and shall manage interest income in accordance with the Cash Management Improvement Act of 1990 and as indicated in the Office of Justice Programs Financial Guide. Interest earned in excess of allowable limits must be remitted to the COMMISSION within 30 days after receipt of a written request from the COMMISSION.
Link: OJP Financial Guide https://ojp.gov/financialguide/doj/pdfs/DOJ_FinancialGuide.pdf

26. GRANTEE agrees to obtain written COMMISSION approval for all sole source procurements in excess of $150,000.

27. GRANTEE agrees to obtain written COMMISSION approval prior to the expenditure of grant funds for consultant fees in excess of $650 per day.

DocuSign Envelope ID: 8E3C152B-1E54-4974-BCFC-DDDE7DEFDBE9

28. GRANTEE agrees to not use federal grant funds to pay cash compensation (salary plus bonuses) to any employee paid by the grant at a rate that exceeds 110% of the maximum annual salary payable to a member of the federal government's Senior Executive Service (SES) at an agency with a Certified SES Performance Appraisal System for that year. (An award recipient may compensate an employee at a higher rate, provided the amount in excess of this compensation limitation is paid with non-federal funds, unless otherwise noted in the grant solicitation.)

29. GRANTEE agrees not to use grant funds for food and/or beverage unless explicitly approved in writing by the COMMISSION.

30. GRANTEE agrees to comply with all applicable laws, regulations, policies and guidance (including specific cost limits, prior approvals and reporting requirements, where applicable) governing the use of grant funds for expenses related to conferences, meetings, trainings, and other events, including the provision of food and/or beverages at such events, and costs of attendance at such events unless explicitly approved in writing by the COMMISSION. Information on pertinent laws, regulations, policies, and guidance is available in the OJP Financial Guide (currently, as section 3.10 "Postaward Requirements" in the DOJ Grants Financial Guide").

31. No funds shall be used to supplant federal, state, county or local funds that would otherwise be made available for such purposes. Supplanting means the deliberate reduction of state or local funds because of the existence of any grant funds.

32. GRANTEE assigns to the COMMISSION any claim for overcharges resulting from antitrust violations to the extent that such violations concern materials or services applied by third parties to GRANTEE in exchange for grant funds provided under this Agreement.

33. The parties agree to use arbitration in the event of disputes in accordance with the provisions of A.R.S. § 12-1501-12-1518. The laws of the State of Arizona apply to questions arising under this Agreement and any litigation regarding this Agreement must be maintained in Arizona courts, except as pertaining to disputes which are subject to arbitration.

    I. In the event of a dispute, controversy, or claim arising out of or relating in any way to the Agreement, the complaining Party shall notify the other Party in writing thereof. Within 30 calendar days of such notice, representatives of both Parties shall meet at an agreed location to attempt to resolve the dispute in good faith. Should the dispute not be resolved within 30 calendar days after such notice, the complaining Party shall seek remedies exclusively through arbitration, in accordance with the provisions of A.R.S. § 12-1501 through 12-1518.

    II. The arbitration demand must be a clear and concise statement of the claim or dispute. The respondent's answer and any counterclaims must be filed within 20 calendar days of service of the demand.

    III. The arbitration shall be conducted in Maricopa County.

    IV. The arbitration shall be conducted by one arbitrator. If the Parties are not able to agree upon the selection of an arbitrator, within 20 calendar days of the commencement of an arbitration proceeding by service of a demand for arbitration, the court on application of a Party shall appoint the arbitrator.

    V. The arbitrator must promptly set a conference to clarify the claims and defenses, to establish fair procedures, and to set a schedule for completing the arbitration.

    VI. It is the intent of the parties that, barring extraordinary circumstances, arbitration proceedings will be concluded with 120 calendar days from the date the arbitrator is appointed. The arbitrator may extend the time limit in the interests of justice.

DocuSign Envelope ID: 8E3C152B-1E54-4974-BCFC-DDDE7DEFDBE9

Failure to adhere to this time limit shall not constitute a basis for challenging the award.

VII. The arbitrator must issue a written, reasoned award within 20 calendar days from the date the hearing is formally closed, or as soon after that as is feasible. The sole remedy will be actual damages; no punitive damages are allowed.

VIII. Unless the arbitrator orders otherwise, the Parties must share arbitration costs equally, including arbitrator's fees and expenses. Each party must pay its own expenses and attorney's fees.

34. GRANTEE understands that grant funds may not be released until all delinquent reports and reversion of funds from prior grants are submitted to the COMMISSION.

35. GRANTEE agrees that grant funds are not to be expended for any indirect costs that may be incurred by GRANTEE for administering these funds unless explicitly approved in writing by the COMMISSION. This may include, but is not limited to, costs for services such as accounting, payroll, data processing, purchasing, personnel, and building use which may have been incurred by the GRANTEE.

36. Each party (as "Indemnitor") agrees to defend, indemnify, and hold harmless the other party (as "Indemnitee") from and against any and all claims, losses, liability, costs, or expenses, (including reasonable attorney's fees) (hereinafter collectively referred to as "Claims") arising out of bodily injury of any person (including death) or property damage, but only to the extent that such Claims which result in vicarious/derivative liability to the Indemnitee are caused by the act, omission, negligence, misconduct, or other fault of the Indeminitor, its officers, officials, agents, employees, or volunteers. If the GRANTEE is a State agency, board, commission, or university of the State of Arizona, this paragraph shall not apply.

37. Should GRANTEE utilize a contractor(s) and subcontractor(s) the indemnification clause between GRANTEE and its contractor(s) and subcontractor(s) shall include the following:

    Contractor shall defend, indemnify, and hold harmless the GRANTEE and the State of Arizona, and any jurisdiction or agency issuing any permits for any work arising out of this Agreement, and its departments, agencies, boards, commissions, universities, officers, officials, agents, and employees (hereinafter referred to as "Indemnitee") from and against any and all claims, actions, liabilities, damages, losses, or expenses (including court costs, attorneys' fees, and costs of claim processing, investigation and litigation) (hereinafter referred to as "Claims") for bodily injury or personal injury (including death), or loss or damage to tangible or intangible property caused, or alleged to be caused, in whole or in part, by the negligent or willful acts or omissions of the contractor or any of the directors, officers, agents, or employees or subcontractors of such contractor. This indemnity includes any claim or amount arising out of or recovered under the Workers' Compensation Law or arising out of the failure of such contractor to conform to any federal, state or local law, statute, ordinance, rule, regulation or court decree. It is the specific intention of the parties that the Indemnitee shall, in all instances, except for Claims arising solely from the negligent or willful acts or omissions of the Indemnitee, be indemnified by such contractor from and against any and all claims. It is agreed that such contractor will be responsible for primary loss investigation, defense and judgment costs where this indemnification is applicable. Additionally on all applicable insurance policies, contractor and its subcontractors shall name the State of Arizona, and its departments, agencies, boards, commissions, universities, officers, officials, agents, and employees as an additional insured and also include a waiver of subrogation in favor of the State. Insurance requirements for any contractor used by GRANTEE are incorporated herein by this reference and attached to this Agreement as Exhibit "A".

38. Restrictions and certifications regarding non-disclosure agreements and related matters

DocuSign Envelope ID: 8E3C152B-1E54-4974-BCFC-DDDE7DEFDBE9

No GRANTEE under this award, or entity that receives a procurement contract or subcontract with any funds under this award, may require any employee or contractor to sign an internal confidentiality agreement or statement that prohibits or otherwise restricts, or purports to prohibit or restrict, the reporting (in accordance with law) of waste, fraud, or abuse to an investigative or law enforcement representative of a federal department or agency authorized to receive such information.

The foregoing is not intended, and shall not be understood by the agency making this award, to contravene requirements applicable to Standard Form 312 (which relates to classified information), Form 4414 (which relates to sensitive compartmented information), or any other form issued by a federal department or agency governing the nondisclosure of classified information.

I. In accepting this award, the GRANTEE--

a. represents that it neither requires nor has required internal confidentiality agreements or statements from employees or contractors that currently prohibit or otherwise currently restrict (or purport to prohibit or restrict) employees or contractors from reporting waste, fraud, or abuse as described above; and

b. certifies that, if it learns or is notified that it is or has been requiring its employees or contractors to execute agreements or statements that prohibit or otherwise restrict (or purport to prohibit or restrict), reporting of waste, fraud, or abuse as described above, it will immediately stop any further obligations of award funds, will provide prompt written notification to the federal agency making this award, and will resume (or permit resumption of) such obligations only if expressly authorized to do so by that agency.

II. If the GRANTEE does or is authorized under this award to make subawards ("subgrants"), procurement contracts, or both--

a. it represents that--

(1) it has determined that no other entity that the recipient's application proposes may or will receive award funds (whether through a subaward ("subgrant"), procurement contract, or subcontract under a procurement contract) either requires or has required internal confidentiality agreements or statements from employees or contractors that currently prohibit or otherwise currently restrict (or purport to prohibit or restrict) employees or contractors from reporting waste, fraud, or abuse as described above; and

(2) it has made appropriate inquiry, or otherwise has an adequate factual basis, to support this representation; and

b. it certifies that, if it learns or is notified that any subrecipient, contractor, or subcontractor entity that receives funds under this award is or has been requiring its employees or contractors to execute agreements or statements that prohibit or otherwise restrict (or purport to prohibit or restrict), reporting of waste, fraud, or abuse as described above, it will immediately stop any further obligations of award funds to or by that entity, will provide prompt written notification to the federal agency making this award, and will resume (or permit resumption of) such obligations only if expressly authorized to do so by that agency.

DocuSign Envelope ID: 8E3C152B-1E54-4974-BCFC-DDDE7DEFDBE9

39. GRANTEE agrees to notify the COMMISSION within ten (10) days in the event that the project official is replaced during the award period.

40. No rights or interest in this Agreement shall be assigned by GRANTEE without prior written approval of the COMMISSION.

41. GRANTEE will comply with the audit requirements of *Uniform Guidance (2 CFR 200 subpart F 200.500)* and provide the COMMISSION with the audit report and any findings within 90 days of receipt of such finding. If the report contains no findings, the GRANTEE must provide notification that the audit was completed.
    Link: *Audit Requirements for OJP Awards:*
    https://ojp.gov/funding/pdfs/AuditRequirementsPart200.pdf

42. GRANTEE certifies that it will comply with the Uniform Administrative Requirements, Cost Principles, and Audit Requirements in 2 C.F.R. Part 200, as adopted and supplemented by DOJ in 2 C.F.R. Part 2800 (together, the "Part 200 Uniform Requirements") and the OJP Financial Guide.
    Link: *2 C.F.R Part 200 for OJP Awards:*
    https://ojp.gov/funding/Part200UniformRequirements.htm

43. Compliance with general appropriations-law restrictions on the use of federal funds for awards made after FY 2018. GRANTEE or sub-grantee at any tier, must comply with all applicable restrictions on the use of federal funds set out in federal appropriations statutes. Should a question arise as to whether a particular use of federal funds by a GRANTEE would or might fall within the scope of an appropriations-law restriction, the recipient is to contact OJP for guidance, and may not proceed without the express prior written approval of OJP. Pertinent restrictions, including from various "general provisions" in the Consolidated Appropriations Act, 2018 https://ojp.gov/funding/Explore/FY18AppropriationsRestrictions.htm

44. GRANTEE agrees that it cannot use any federal funds, either directly or indirectly, in support of any contract or sub award to either the Association of Community Organizations for Reform Now (ACORN) or its subsidiaries, without the express written approval of the Office of Justice Programs through the COMMISSION.

45. GRANTEE understands and agrees that misuse of award funds may result in a range of penalties, including suspension of current and future funds, suspension or debarment from federal grants, recoupment of monies provided under an award, and civil and/or criminal penalties.

46. GRANTEE agrees not to do business with any individual, agency, company or corporation listed in the Excluded Parties Listing Service.
    Link: *System for Award Management* https://www.sam.gov/SAM/

47. GRANTEE agrees to ensure that, no later than the due date of the GRANTEE's first financial report after the award is made, GRANTEE and any subgrantees have a valid DUNS profile and active registration with the System for Award Management (SAM) database.

48. GRANTEE certifies that it presently has no financial interest and shall not acquire any financial interest, direct or indirect, which would conflict in any manner or degree with the performance of services required under this Agreement.

49. GRANTEE understands and agrees that any training or training materials developed or delivered with funding provided under this award must adhere to the *OJP Training Guide Principles for Grantees and Subgrantees.*

DocuSign Envelope ID: 8E3C152B-1E54-4974-BCFC-DDDE7DEFDBE9

Link: *OJP Training Guide Principles for Grantees and Subgrantees*
https://ojp.gov/funding/Implement/TrainingPrinciplesForGrantees-Subgrantees.htm

50. GRANTEE agrees to cooperate and participate with any and all assessments, evaluation efforts or information and data collection requests, and acknowledges that the federal or state grantor agency has the right to obtain, reproduce, publish or use data provided under this award and may authorize others to receive and use such information.

51. GRANTEE shall provide the COMMISSION with a copy of all interim and final reports and proposed publications (including those prepared for conferences and other presentations) resulting from this Agreement. Submission of such materials must be prior to or simultaneous with their public release.

52. GRANTEE agrees that any publications (written, visual, or sound) excluding press releases and newsletters, whether published at the GRANTEE'S or COMMISSION'S expense, shall contain the following statement:

    "This was supported by Award No. 2019-VI-GX-0053 awarded by the Office for Victims of Crime, Office of Justice Programs, U.S. Department of Justice. The opinions findings, and conclusions or recommendations expressed in this publication/program/exhibition are those of the author(s) and do not necessarily reflect the views of the Department of Justice."

53. GRANTEE agrees to comply with the non-discrimination requirements of the Omnibus Crime Control and Safe Streets Act (Safe Streets Act) of 1968, as amended, 34 U.S.C. § 10228(c); the Victims of Crime Act of 1984, as amended, 34 U.S.C. § 20110(e); the Juvenile Justice and Delinquency Prevention Act of 1974, as amended, 34 U.S.C. § 11182(b); and VAWA, as amended, 34 U.S.C. § 12291(b)(13), contain prohibitions against discrimination on the basis of religion in employment. Despite these nondiscrimination provisions, the DOJ has concluded that it may construe the Religious Freedom Restoration Act (RFRA) on a case-by-case basis to permit some faith-based organizations to receive DOJ funds while taking into account religion when hiring staff, even if the statute that authorizes the funding program generally forbids recipients from considering religion in employment decisions. Please consult with the OCR if you have any questions about the regulation or the application of RFRA to the statues that prohibit discrimination in employment. An organization that is a recipient of financial assistance subject to the nondiscrimination provisions of the Safe Streets Act, must meet two obligations: (1) complying with the federal regulation pertaining to the development of an EEOP (see 28 C.F.R. pt. 42, subpt. E) and (2) submitting to the OCR findings of discrimination (see 28 C.F.R. §§ 42.204(c), .205(c)(5)). If in the three years prior to the date of the grant award a Federal or State Court or Federal or State administrative agency makes a finding of discrimination after a due process hearing against GRANTEE, GRANTEE will forward a copy of the findings to the Office for Civil Rights, Office of Justice Programs and the COMMISSION.

54. In accordance with DOJ guidance pertaining to Title VI of the Civil Rights Act of 1964, 42 U.S.C. § 2000d, recipients of federal financial assistance must take reasonable steps to provide meaningful access to their programs and activities for persons with limited English proficiency (LEP). See U.S. Department of Justice, Guidance to Federal Financial Assistance Recipient Regarding Title VI Prohibition Against National Origin Discrimination Affecting Limited English Proficient Persons, 67 Fed. Reg. 41,455 (2002). For more information on the civil rights responsibilities that recipients have in providing language services to LEP individuals, please see the website:
    Link: *Limited English Proficiency A Federal Interagency Website* http://www.LEP.gov

DocuSign Envelope ID: 8E3C152B-1E54-4974-BCFC-DDDE7DEFDBE9

55. GRANTEE agrees to comply with the applicable requirements of 28 CFR Part 38, the Department of Justice regulation governing "Partnerships with Faith-Based and Other Neighborhood Organizations" (the "PFNBO"). The PFNBO Regulation provides in part that Department of Justice financial assistance may not be used to fund any inherently religious activities, such as worship, religious instruction, or proselytization. Recipients of Department of Justice financial assistance may still engage in inherently religious activities, but such activities must be separate in time or place from the Department of Justice funded program, and participation in such activities by individuals receiving services from GRANTEE must be voluntary. The PFNBO Regulation also makes clear that organizations participating in programs receiving financial assistance from the Department of Justice are not permitted to discriminate in the provision of services on the basis of a beneficiary's religion. Notwithstanding any other special condition of this award, faith-based organizations may, in some circumstances, consider religion as a basis for employment.
Link:
https://ojp.gov/funding/Explore/SolicitationRequirements/CivilRightsRequirements.htm#NDPFaith

56. Requirements pertaining to prohibited conduct related to trafficking in persons (including reporting requirements and OJP authority to terminate award)

    The GRANTEE or subgrantee at any tier, must comply with all applicable requirements (including requirements to report allegations) pertaining to prohibited conduct related to the trafficking of persons, whether on the part of recipients, GRANTEES, or individuals defined (for purposes of this condition) as "employees" of the recipient or of any GRANTEE.

    The details of the recipient's obligations related to prohibited conduct related to trafficking in persons are posted on the OJP web site at http://ojp.gov/funding/Explore/ProhibitedConduct-Trafficking.htm (Award condition: Prohibited conduct by recipients and GRANTEES related to trafficking in persons (including reporting requirements and OJP authority to terminate award)), and are incorporated by reference here.

57. GRANTEE should be mindful that the misuse of arrest or conviction records to screen either applicants for employment or employees for retention or promotion may have a disparate impact based on race or national origin, resulting in unlawful employment discrimination. As of June 2013 OJP has issued an advisory that grantees should consult local counsel in reviewing their employment practices. If warranted, grantees should also incorporate an analysis of the use of arrest and conviction records in their Equal Employment Opportunity Plan (EEOP). See Advisory for Recipients of Financial Assistance from the U.S. Department of Justice on the U.S. Equal Employment Opportunity Commission's Enforcement Guidance: Consideration of Arrest and Conviction Records in Employment Decisions Under Title VII of the Civil Rights Act of 1964 (June 2013), available at http://www.ojp.gov/about/ocr/pdfs/UseofConviction_Advisory.pdf.

58. GRANTEE assures that it will comply with all state and federal laws regarding privacy during the course of the award. All information relating to clients is to be treated with confidentiality in accordance with 42 USC section 3789g or 42 USC 14132(b)(3) that are applicable to the collection, disclosure, use and revelation of data information. GRANTEE further agrees to submit a privacy Certificate that is in accordance with requirements of 28 CFR Part 22 if applicable to the program.

59. GRANTEE agrees to formulate and keep on file an EEOP (if GRANTEE is required pursuant to 28 CFR 42 Subpart E). GRANTEE certifies that they have forwarded to the Office for Civil Rights, Office of Justice Programs the EEOP, or certifications that they have prepared and have on file an EEOP, or that they are exempt from EEOP requirements. Failure to comply may result in suspension of grant funds. Copies of all submissions such as certifications to or

DocuSign Envelope ID: 8E3C152B-1E54-4974-BCFC-DDDE7DEFDBE9

correspondence with the Office for Civil Rights, Office of Justice Programs regarding this requirement must be provided to the COMMISSION by GRANTEE. In the event a federal or state court or federal or state administrative agency makes an adverse finding of discrimination against GRANTEE after a due process hearing, on the ground of race, color, religion, national origin, or sex, GRANTEE will forward a copy of the findings to the Office for Civil Rights, Office of Justice Programs and the COMMISSION (see 28 CFR 42.204(c), .205(c)(5)). .

60. GRANTEE agrees to participate in any required civil rights related training to ensure compliance with all federal and state civil rights laws. GRANTEE will inform the COMMISSION of the position responsible for civil rights compliance and will inform the COMMISSION of change in personnel responsible for civil rights compliance within ten days.
Link: http://www.azcjc.gov/grants

61. Compliance with 41 U.S.C. 4712 (including prohibitions on reprisal; notice to employees) GRANTEE must comply with, and is subject to, all applicable provisions of 41 U.S.C. 4712, including all applicable provisions that prohibit, under specified circumstances, discrimination against an employee as reprisal for the employee's disclosure of information related to gross mismanagement of a federal grant, a gross waste of federal funds, an abuse of authority relating to a federal grant, a substantial and specific danger to public health or safety, or a violation of law, rule, or regulation related to a federal grant.

    GRANTEE also must inform its employees, in writing (and in the predominant native language of the workforce), of employee rights and remedies under 41 U.S.C. 4712. Should a question arise as to the applicability of the provisions of 41 U.S.C. 4712 to this award, the recipient is to contact the DOJ awarding agency (OJP or OVW, as appropriate) for guidance.

62. To support public safety and justice information sharing, GRANTEE, if a governmental subdivision, shall use the National Information Exchange Model (NIEM) specifications and guidelines for this grant. GRANTEE shall publish and make available without restrictions all schemas generated as a result of this grant to the component registry as specified in the guidelines.
Link: http://niem.github.io/reference/specifications/

63. In order to promote information sharing and enable interoperability among disparate systems across the justice and public safety community, OJP requires the grantee to comply with DOJ's Global Justice Information Sharing Initiative (DOJ's Global) guidelines and recommendations for this particular grant. Grantee shall conform to the Global Standards Package (GSP) and all constituent elements, where applicable, as described at:
Link: https://it.ojp.gov/gsp_grantcondition

    Grantee shall document planned approaches to information sharing and describe compliance to the GSP and appropriate privacy policy that protects shared information, or provide detailed justification for why an alternative approach is recommended.

64. To avoid duplicating existing networks or IT systems in any initiatives for law enforcement information sharing systems which involve interstate connectivity between jurisdictions, such systems shall employ, to the extent possible, existing networks as the communication backbone to achieve interstate connectivity, unless GRANTEE can demonstrate to the satisfaction of the COMMISSION that this requirement would not be cost beneficial or would impair the functionality of an existing or proposed IT system.

65. If GRANTEE is a governmental political subdivision, the GRANTEE should, to the extent possible and practical, share criminal justice information with other authorized criminal justice agencies. The process control number (PCN) shall be used in accordance with A.R.S. § 41-

DocuSign Envelope ID: 8E3C152B-1E54-4974-BCFC-DDDE7DEFDBE9

1750 when sharing data with other criminal justice agencies as electronic data systems are developed or improved.

66. If GRANTEE is a state agency and the award is for the development of information technology projects for more than $25,000, GRANTEE must complete a Project Investment Justification (PIJ) and submit the justification to the Arizona Department of Administration (ADOA), with a copy to the COMMISSION. GRANTEE agrees to submit required project status reports to ADOA by the due dates and submit copies to the COMMISSION.

    If GRANTEE is not a state agency and the award is for the development of information technology projects, GRANTEE will follow local technology policies and guidelines.

67. GRANTEE must promptly refer to the COMMISSION any credible evidence that a principal, employee, agent, contractor, subgrantee, contractor, subcontractor, or other person has, in connection with funds under this award, has either 1) submitted a false claim that violates the False Claims Act; or 2) committed a criminal or civil violation of laws pertaining to fraud, conflict of interest, bribery, gratuity, or similar misconduct. The COMMISSION shall forward the referral to the Department of Justice, Office of the Inspector General.

68. The COMMISSION encourages GRANTEE to establish workplace safety policies and conduct education, awareness and other outreach to decrease crashes caused by distracted drivers, including adopting and enforcing policies banning employees from text messaging while driving any vehicle during the course of performing work funded by this grant. Executive Order 13513, "Federal Leadership on Reducing Text Messaging While Driving," 74 Fed. Reg. 51225 (October 2009).

69. GRANTEE certifies to comply with the Drug-Free Workplace Act of 1988, and implemented in 28 CFR Part 83, Subpart F, for grantees, as defined in 28 CFR, Part 83 Sections 83.620 and 83.650.

70. GRANTEE agrees to complete and keep on file, as appropriate, Immigration and Naturalization Form (I-9). This form is to be used by recipients to verify that persons are eligible to work in the United States. Additionally GRANTEE ensures compliance with A.R.S. § 41-4401 by state employers and contractors.

71. GRANTEE acknowledges that immigration laws require them to register and participate with the E-Verify program (employment verification program administered by the United States Department of Homeland Security and the Social Security Administration or any successor program) as they both employ one or more employees in this state. GRANTEE warrants that they have registered with and participate with E-Verify. If the COMMISSION later determines that the GRANTEE has not complied with E-Verify, it will notify the non-compliant GRANTEE by certified mail of the determination and of the right to appeal the determination.

72. GRANTEE certifies that no federal funds will be paid, by or on behalf of, to any person for influencing or attempting to influence an officer or employee of any agency, a Member of Congress, an officer or employee of Congress, or an employee of a Member of Congress in connection with the awarding of any Federal contract, the making of any Federal grant, the making of any Federal loan, the entering into any cooperative agreement, and for the extension, continuation, renewal, amendment, or modification of any Federal contract, grant, loan or cooperative agreement. If any funds other than Federal funds are paid or will be paid to any person for influencing or attempting to influence an officer or employee of Congress, or an employee of a Member of Congress in connection with this Federal award, grant loan, or cooperative agreement, the GRANTEE will complete and submit to the COMMISSION Standard Form-LLL, "Disclosure Form to Report Lobbying" in accordance with its instructions.

DocuSign Envelope ID: 8E3C152B-1E54-4974-BCFC-DDDE7DEFDBE9

73. GRANTEE understands and agrees that it cannot use any federal funds, either directly or indirectly, in support of the enactment, repeal, modification or adoption of any law, regulation or policy at any level of government, without the express prior written approval of the Commission.

74. GRANTEE agrees that no funds provided, or personnel employed under this Agreement shall be in any way, or to any extent, engaged in conduct of political activities in violation of USC Title 5, Part II, Chapter 15, section 1502.

75. GRANTEE understands and agrees that award funds may not be used to discriminate against or denigrate the religious or moral beliefs of students who participate in programs for which financial assistance is provided from those funds, or of the parents or legal guardians of such students.

76. GRANTEE understands and agrees that- (a) no award funds may be used to maintain or establish a computer network unless such network blocks the viewing, downloading and exchanging or pornography, and (b) nothing in subsection (a) limits the use of funds necessary for any Federal, State, tribal or local law enforcement agency or any other entity carrying out criminal investigations, prosecution, or adjudication activities.

77. GRANTEE agrees to comply with all federal, state and local environmental laws and regulations applicable to the development and implementation of activities to be funded under this award. Additional requirements may be found in Grant Agreement Continuation Sheet.

78. GRANTEE agrees that all gross income earned by the GRANTEE that is directly generated by a supported activity or earned as a result of this award during the period of performance shall be deemed program income. All program income must be accounted for and used for the purpose under the conditions applicable for the use of funds under this award, including the effective edition of the OJP Financial Guide and, as applicable in 2 C.F.R. Part 200 Uniform Requirements.

79. This Agreement is subject to cancellation pursuant to the provision of A.R.S. § 38-511. This Agreement may also be cancelled at the COMMISSION'S discretion if not returned with authorized signatures to the COMMISSION within 90 days of commencement of the award.

80. If any provision of this Agreement is held invalid, the remainder of the Agreement shall not be affected thereby and all other parts of this Agreement shall be in full force and effect.

81. GRANTEE agrees to comply with all Special Condition(s) included with this Agreement on the Grant Agreement Continuation Sheet.

82. GRANTEE understands that grant funds may not be released until GRANTEE is compliant with all requirements of grant agreement.

DocuSign Envelope ID: 8E3C152B-1E54-4974-BCFC-DDDE7DEFDBE9

Arizona Criminal Justice Commission
GILA COUNTY ATTORNEY'S OFFICE
GRANT AGREEMENT CONTINUATION SHEET
SPECIAL CONDITION(S)

1. GRANTEE must verify Agency Point of Contact (APOC), Financial Point of Contact (FPOC), Program Point of Contact (PPOC), and Authorized Official contact information in the Grants Management System (GMS), including telephone number and e-mail address. If any information is incorrect or has changed, a Grant Adjustment Notice (GAN) must be submitted via the GMS to document changes. In addition the FPOC and PPOC must be assigned by the APOC prior to payments being made.

2. GRANTEE acknowledges that OJP reserves a royalty-free, non-exclusive, and irrevocable license to reproduce, publish, or otherwise use, and authorize others to use (in whole or in part, including in connection with derivative works), for Federal purposes: (1) any work subject to copyright developed under an award or subaward; and (2) any rights of copyright to which a recipient or subrecipient purchases ownership with Federal support.

3. The GRANTEE agrees that allocated compensation benefit funds will be used to provide compensation awards to victims of criminally injurious conduct occurring within the GRANTEE'S jurisdiction.

4. The GRANTEE understands that $15,100.00 is the maximum allowable amount of State compensation funding to be expended on the administration of this program.

5. The GRANTEE agrees that expenditures made in Compensation Benefits will be for Compensation benefit payments only. Funding in Compensation Benefits cannot be transferred to another budget category.

6. The GRANTEE understands that financial reimbursement request forms are required for reimbursement of expenditures. The final request for reimbursement of compensation funds must be received by the COMMISSION no later than 10 days after the last day of the award period.

7. The GRANTEE agrees to comply with all Federal and State laws, provisions of the Arizona Crime Victim Compensation Program Rules R110-4-101 through R10-4-111 administered by the COMMISSION, and provisions of Federal VOCA Compensation Program Guidelines (https://www.ovc.gov/voca/pdftxt/voca_guidelines2001.pdf).

8. The GRANTEE agrees to comply with all applicable Open Meeting Laws, A.R.S. §38-431 et seq.

9. The GRANTEE agrees to seek and order all available restitution owed to the program.

10. The GRANTEE agrees to negotiate reductions in fees for service with service providers for all program benefit expenditures.

11. The GRANTEE agrees that information on race, sex, national origin, age, and disability of recipients of compensation will be collected and maintained, where such information is voluntarily furnished by those receiving compensation.

12. The grantee agrees to adhere to the provisions and conditions outlined in the Memorandum

DocuSign Envelope ID: 8E3C152B-1E54-4974-BCFC-DDDE7DEFDBE9

of Understanding (MOU) between the Office for Victims of Crime (OVC) and the Federal Bureau of Investigation (FBI) pertaining to the dissemination of information to State Crime Victim Compensation Programs concerning the verification of victims of crime claims investigated by the FBI. Failure to abide by the provision of the MOU will result in a cancellation of the agreement to release FBI investigative information to the grantee.

13. GRANTEE must have written procedures in place to respond in the event of an actual or imminent "breach" (OMB M-17-12) if it 1) creates, collects, uses, processes, stores, maintains, disseminates, discloses, or disposes of "personally identifiable information (PII)" (2 CFR 200.79) within the scope of an OJP grant-funded program or activity, or 2) uses or operates a "Federal information system" (OMB Circular A-130). The GRANTEE'S breach procedures must include a requirement to report actual or imminent break of PII to the COMMISSION no later than 24 hours after an occurrence of an actual breach, or the detection of an imminent breach.

14. GRANTEE agrees to submit supporting documentation (i.e. receipts, invoices, timesheets, and/or payroll records) for all administrative expenditures with the monthly financial report through the ACJC Grant Management System (GMS) and agrees to make available supporting documentation for all victim compensation expenditures.

15. GRANTEE agrees to submit quarterly activity reports on the victim compensation claim data identified by the Commission and victim compensation claim expense documentation through the ACJC Data Warehouse.

16. GRANTEE acknowledges the requirements of the award; remedies for non-compliance or for materially false statements. The conditions of this award are material requirements of the award. Compliance with any certifications or assurances submitted by or on behalf of the recipient that relate to conduct during the period of performance also is a material requirement of this award.

Failure to comply with any or more of these award requirements—whether a condition set out in full below, a condition incorporated by the reference below, or a certification or assurance related to conduct during the award period may result in the Office of Justice Programs ("OJP") taking appropriate action with respect to the recipient and the award. Among other things, the OJP may withhold finds, disallow costs, or suspend or terminate the award. The Department of Justice ("DOJ"), including OJP, also may take other legal action as appropriate.

Any materially false, fictitious, or fraudulent statement to the federal government related to this award (or concealment or omission of a material fact) may be the subject of criminal prosecution (including under 18 U.S.C 1001 and/or 1621, and/or 34 U.S.C. 10271-10273), and also may lead to imposition of civil penalties and administrative remedies for false claims or otherwise (including under 31 U.S.C 3729-3730 and 3801-3812).

Should any provision of a requirement of this award be held to be invalid or unenforceable by its terms, that provision shall first be applied with limited construction so as to give it the maximum effect permitted by law. Should it be held, instead, that the provision is utterly invalid or unenforceable, such provision shall be deemed severable from this award.

17. GRANTEE must have written procedures in place to respond in the event of an actual or imminent "breach" (OMB M-17-12) if it 1) creates, collects, uses, processes, stores, maintains, disseminates, discloses, or disposes of "personally identifiable information (PII)" (2 CFR 200.79) within the scope of an OJP grant-funded program or activity, or 2) uses or operates a "Federal information system" (OMB Circular A-130). The GRANTEE'S breach procedures must include a requirement to report actual or imminent break of PII to the

DocuSign Envelope ID: 8E3C152B-1E54-4974-BCFC-DDDE7DEFDBE9

COMMISSION no later than 24 hours after an occurrence of an actual breach, or the detection of an imminent breach.

18. The GRANTEE warrants its compliance with all federal immigration laws and regulations that relate to its employees and A.R.S. § 23-214(A). If a grantee uses any subcontractors in performance of this contract, subcontractors shall warrant their compliance with all federal immigration laws and regulations that relate to their employees and A.R.S. § 23-214(A). A breach of this warranty shall be deemed a material breach of the contract subject to penalties up to and including termination of this contract. The Commission retains the legal right to inspect the papers of the grantee and its subcontractors who work on the contract to ensure that it or its subcontractors are complying with this warranty.

19. GRANTEE and any subrecipient at any tier, must make determinations of suitability before certain individuals may interact with participating minors. This requirement applies regardless of an individual's employment status. The details of this requirement are posted on the OJP web site at https://ojp.gov/funding/Explore/Interact-Minors.htm

Authorized Official Initials:_____

DocuSign Envelope ID: 8E3C152B-1E54-4974-BCFC-DDDE7DEFDBE9

IN WITNESS WHEREOF, the parties have made and executed the Agreement the day and year first above written.

FOR GRANTEE:

Authorized Signatory Date

Woody Cline - Chairman of the Board

Printed Name and Title

Approved as to form and authority to enter into Agreement:

Legal counsel for GRANTEE Date

Gila County Attorney's Office

Printed Name and Title

Statutory or other legal authority to enter into Agreement:

Appropriate A.R.S., ordinance, or charter reference

FOR CRIMINAL JUSTICE COMMISSION:

Andrew T. LeFevre, Executive Director
Arizona Criminal Justice Commission

Date

DocuSign Envelope ID: 8E3C152B-1E54-4974-BCFC-DDDE7DEFDBE9

ARIZONA CRIMINAL JUSTICE COMMISSION
GRANT AGREEMENT

Insurance Requirements
Exhibit "A"

***Insurance Requirements* for Governmental Parties to a Grant Agreement:**

None.

***Insurance Requirements* for Any Contractors Used by a Party to the Grant Agreement:**

(Note: this applies only to Contractors used by a governmental entity, not to the governmental entity itself.) The *insurance requirements* herein are minimum requirements and in no way limit the indemnity covenants contained in the Intergovernmental Agreement. The State of Arizona in no way warrants that the minimum limits contained herein are sufficient to protect the governmental entity or Contractor from liabilities that might arise out of the performance of the work under this Contract by the Contractor, his agents, representatives, employees or subcontractors, and Contractor and the governmental entity are free to purchase additional insurance.

A. **MINIMUM SCOPE AND LIMITS OF INSURANCE:** Contractor shall provide coverage with limits of liability not less than those stated below.

1. **Commercial General Liability – Occurrence Form**
   Policy shall include bodily injury, property damage, and broad form contractual liability.

• General Aggregate	$2,000,000
• Products – Completed Operations Aggregate	$1,000,000
• Personal and Advertising Injury	$1,000,000
• Fire Legal Liability	$50,000
• Each Occurrence	$1,000,000

   a. The policy shall be endorsed, as required by this written agreement, to include the State of Arizona, and its departments, agencies, boards, commissions, universities, officers, officials, agents, and employees as additional insureds with respect to liability arising out of the activities performed by or on behalf of the Contractor.

      (Note that the other governmental entity(ies) is/are also required to be additional insured(s) and they should supply the Contractor with their own list of persons to be insured.)

   b. Policy shall contain a waiver of subrogation endorsement, as required by this written agreement, in favor of the State of Arizona, and its departments, agencies, boards, commissions, universities, officers, officials, agents, and employees for losses arising from work performed by or on behalf of the Contractor.

DocuSign Envelope ID: 8E3C152B-1E54-4974-BCFC-DDDE7DEFDBE9

Exhibit "A" Page 2

2. **Business Automobile Liability**
   Bodily Injury and Property Damage for any owned, hired, and/or non-owned vehicles used in the performance of this Contract.

   Combined Single Limit (CSL) $1,000,000

   a. The policy shall be endorsed, as required by this written agreement, to include the State of Arizona, and its departments, agencies, boards, commissions, universities, officers, officials, agents, and employees as additional insureds with respect to liability arising out of the activities performed by or on behalf of, the Contractor involving automobiles owned, hired and/or non-owned by the Contractor.

   b. Policy shall contain a waiver of subrogation endorsement as required by this written agreement in favor of the State of Arizona, and its departments, agencies, boards, commissions, universities, officers, officials, agents, and employees for losses arising from work performed by or on behalf of the Contractor.

      (Note that the other governmental entity(ies) is/are also required to be additional insured(s) and they should supply the Contractor with their own list of persons to be insured.)

3. **Worker's Compensation and Employers' Liability**

Workers' Compensation	Statutory
Employers' Liability	
Each Accident	$1,000,000
Disease – Each Employee	$1,000,000
Disease – Policy Limit	$1,000,000

   a. Policy shall contain a waiver of subrogation endorsement, as required by this written agreement, in favor of the State of Arizona, and its departments, agencies, boards, commissions, universities, its officers, officials, agents, and employees for losses arising from work performed by or on behalf of the Contractor.

   b. This requirement shall not apply to each contractor or subcontractor that is exempt under A.R.S. § 23-901, and when such contractor or subcontractor executes the appropriate waiver form (Sole Proprietor or Independent Contractor).

Additional Insurance Requirements:

The policies shall include, or be endorsed to include, as required by this written agreement, the following provisions:

The Contractor's policies shall stipulate that the insurance afforded the Contractor shall be primary and that any insurance carried by the Department, its agents, officials, employees or the State of Arizona shall be excess and not contributory insurance, as provided by A.R.S. § 41-621 (E).

Insurance provided by the Contractor shall not limit the Contractor's liability assumed under the indemnification provisions of this Contract.

Notice of Cancellation:
For each insurance policy required by the insurance provisions of this Contract, the Contractor must provide to the State of Arizona, within two (2) business days of receipt, a notice if a policy is suspended,

DocuSign Envelope ID: 8E3C152B-1E54-4974-BCFC-DDDE7DEFDBE9

voided, or cancelled for any reason. Such notice shall be mailed, emailed, hand delivered or sent by facsimile transmission to (Enter Contracting Agency Representative's Name, Address, and Fax Number Here).

Acceptability of Insurers:
Contractor's insurance shall be placed with companies licensed in the State of Arizona or hold approved non-admitted status on the Arizona Department of Insurance List of Qualified Unauthorized Insurers. Insurers shall have an "A.M. Best" rating of not less than A- VII. The State of Arizona in no way warrants that the above-required minimum insurer rating is sufficient to protect the Contractor from potential insurer insolvency.

Verification of Coverage:
Contractor shall furnish the State of Arizona with certificates of insurance (valid ACORD form or equivalent approved by the State of Arizona) as required by this Contract. An authorized representative of the insurer shall sign the certificates.

All certificates and endorsements, as required by this written agreement, are to be received and approved by the State of Arizona before work commences. Each insurance policy required by this Contract must be in effect at, or prior to, commencement of work under this Contract. Failure to maintain the insurance policies as required by this Contract, or to provide evidence of renewal, is a material breach of contract.

All certificates required by this Contract shall be sent directly to the Department. The State of Arizona project/contract number and project description shall be noted on the certificate of insurance. The State of Arizona reserves the right to require complete copies of all insurance policies required by this Contract at any time.

Subcontractors:
Contractor's certificate(s) shall include all subcontractors as insureds under its policies or Contractor shall be responsible for ensuring and/or verifying that all subcontractors have valid and collectable insurance as evidenced by the certificates of insurance and endorsements for each subcontractor. All coverages for subcontractors shall be subject to the minimum Insurance Requirements identified above. The Department reserves the right to require, at any time throughout the life of the Contract, proof from the Contractor that its subcontractors have the required coverage.

Approval and Modifications:
The Contracting Agency, in consultation with State Risk, reserves the right to review or make modifications to the insurance limits, required coverages, or endorsements throughout the life of this contract, as deemed necessary. Such action will not require a formal Contract amendment but may be made by administrative action.

Exceptions:
In the event the Contractor or subcontractor(s) is/are a public entity, then the Insurance Requirements shall not apply. Such public entity shall provide a certificate of self-insurance. If the Contractor or subcontractor(s) is/are a State of Arizona agency, board, commission, or university, none of the above shall apply.

Assigning Points of Contact in GMS

1 INTRODUCTION

1.1 Purpose

The ACJC Grant Management System (GMS) is a web-based application designed to help applicants, grantees and ACJC manage grant programs. It unites all ACJC grant programs under a common system, format and process. GMS also provides grant applicants and funded agencies a single location to apply for, submit and report on ACJC grants.

1.2 Roles

There are three points of contact in GMS. The Agency Point of Contact is established when an application is submitted on behalf of an agency. Either the Agency Point of Contact or ACJC can assign the Financial and Program Points of Contact. Each point of contact has the ability to create and submit a Grant Adjustment. One person may be assigned to multiple roles:

- Agency Point of Contact (APOC): Responsible for submitting the application;
- Financial Point of Contact (FPOC): Responsible for creating and submitting financial reports;
- Program Point of Contact (PPOC): Responsible for uploading activity reports.

2 ACCESSING GMS

2.1 ACJC Website

The Grant Management System (GMS) is accessed through the ACJC website located at the following link: http://www.azcjc.gov/

Accessing GMS:

Step 1 - Hold your pointer over "Grants" on the left-hand menu bar.

Step 2 -Once the "Grants" menu expands, click on "Grant Management System."

2.2 Your Information

First-time registrants should provide as much of the information on the registration form as possible.

The program is designed for use with Internet Explorer. Applicants may experience loss of data with other browsers.

Important: Only one GMS account may be created per e-mail address. If the Agency Point of Contact is changed, contact ACJC at GMS@azcjc.gov for assistance.

2.3 Agency Information

The agency information provided when registering should be the agency for which the grant application is being submitted.

Important: Before adding a new agency, check the agency drop-down list first to see if your agency already exists in GMS. If the agency is not already in GMS, add a new agency.

Adding an agency:

Step 1 – Select the "Add New Agency Button."

Step 2 – Provide as much of the information as possible including agency "Type" and "Level."

Step 3 – Select the "Department" from the drop down list or "Add New Department".

Step 4 – Enter your agency's DUNS number. If one does not exist enter "N/A".

Step 5 – Select Yes or No from drop down list for "Registered with CCR" (Sam.gov).

Step 6 – Complete the remainder of the registration.

Step 7 - Create a password.

Step 8 – Select the "Register" button at the bottom of the page.

Step 9 - Scroll to the top of the web-page to see the status of the registration.

2.4 Logging on to GMS

How to log on to GMS:

Step 1 – The login screen of GMS can be found at the following link: http://www.azcjc.gov/GMS3/Login.aspx

Step 2 – Enter your registered e-mail address and password into the appropriate fields of the login form.

Step 3 – Select "Login."

If you forget your password you can select the "Forgot your password? click here" link located underneath the login box. Once you enter your registration e-mail address and select "Request Password," your password will automatically be e-mailed to you.

GMS includes a session timer that will automatically log you out of the system after 30 minutes of inactivity. GMS will save all data before automatically logging out.

3 Assigning Points of Contact

After an application has been approved for funding, the grant record is created. At this point, the person who submitted the application is listed as the Agency Point of Contact.

This section allows the Agency Point of Contact (APOC) to assign those responsible for Activity and Financial reporting for each grant. The Financial and Program Points of Contact must be registered GMS users for the agency prior to being assigned to the grant. If a Point of Contact works for an agency other than the applicant agency, contact ACJC for assistance.

- Financial Point of Contact (FPOC): Is able to create and submit financial reports and Grant Adjustments for assigned grants.

- Program Point of Contact (PPOC): Is able to upload and submit activity reports and create Grant Adjustments for assigned grants.

Assigning Points of Contact:

Step 1 - Select "Point of Contact" on the left-hand menu bar

Step 2 – Filter by grant program assigned to the APOC:

Option 1: "Filter" by Program and/or Year

Option 2: "Filter" by Agency Name only

Step 3 – Click the "Select" button for the grant to assign the FPOC and PPOC

Step 4 – Select a name from the drop down menus next to the "Financial Contact" and "Program Contact"

Step 5 – Click the "Update" button

Arizona Criminal Justice Commission

Chairperson
SHEILA POLK
Yavapai County Attorney

Vice-Chairperson
STEVE STAHL, Chief
Law Enforcement Leader
City of Maricopa Police Department

ALLISTER ADEL
Maricopa County Attorney

MARK BRNOVICH
Attorney General

DAVID K. BYERS, Director
Administrative Office of the Courts

BARBARA LAWALL
Pima County Attorney

GREG MENGARELLI, Mayor
City of Prescott

HESTON SILBERT, Director
Department of Public Safety

MARK NAPIER
Pima County Sheriff

PAUL PENZONE
Maricopa County Sheriff

DAVID SANDERS
Pima County Chief Probation Officer

DAVID SHINN, Director
Department of Corrections

C.T. WRIGHT, Chairperson
Board of Executive Clemency

VACANT
County Supervisor

VACANT
Former Judge

VACANT
Sheriff

VACANT
Chief

VACANT
Chief

VACANT
Chief

Executive Director
Andrew T. LeFevre

1110 West Washington, Suite 230
Phoenix, Arizona 85007
PHONE: (602) 364-1146
FAX:(602) 364-1175
www.azcjc.gov

June 26, 2020

Honorable Bradley D. Beauchamp
Gila County Attorney's Office
1400 E. Ash Street
Globe, Arizona 85501

Re: Victim Compensation Grant Number VC-21-052

Dear: Mr. Bradley D. Beauchamp

On March 26, 2020 the Arizona Criminal Justice Commission (ACJC) designated the County Attorneys' Offices as operational units to administer the Crime Victim Compensation Program for State fiscal year 2021. On March 26, 2020 the Commission also approved the allocation of $3,273,346.00 in state and federal crime victim compensation funds to county programs for FY 2021. The total amount allocated Gila County Attorney's Office includes the following:

ACJC (State Funding)*	$53,189.00
VOCA (Federal Funding)*	$0.00
TOTAL ALLOCATION	$53,189.00

*Estimated Level

The allocation of state funding to the Gila County Attorney's Office compensation program includes $15,100.00 to help cover administration costs of the program in accordance with the budget in the grant agreement. For a summary of administrative expenses please refer to the administrative fund guidelines established by ACJC. Any question about administrative expense eligibility should be directed to ACJC compensation program staff.

For FY 2021, all compensation benefits funding will be distributed through a monthly reimbursement process. ACJC program staff can allow upfront payments of compensation program administrative funds on a case by case basis to programs demonstrating an urgent need and have submitted a written request. All payments will be made through the Automated Clearing House Vendor Payments (direct deposit).

Please find the included Grant Agreement, with instructions for obtaining signatures and formal action. Please return the agreement with authorized signatures to the Commission office within 90 days of the award date of July 1, 2020 or the agreement may be cancelled.

If you have any questions concerning this program you may contact me at 602-364-1177.

Sincerely,

Dorinda M. Johns

Dorinda Johns, Program Coordinator
Crime Victim Services

Our mission is to continuously address, improve, sustain and enhance public safety in the State of Arizona through the coordination, cohesiveness, and effectiveness of the Criminal Justice System

FY21 Victim Compensation Grant Agreement

DocuSign Instructions

Upon receipt of your Victim Compensation Grant Agreement through DocuSign, it is imperative to review the following information outlined in the grant agreement document to ensure that all agency information is correct and that your agency is able to accept and comply with all terms and conditions of the contract. *PLEASE NOTIFY ACJC IF YOUR AGENCY CONTACT(S) DOES NOT RECEIVE A DOCUSIGN EMAIL TO COMPLETE THE EXECUTION OF YOUR GRANT AGREEMENT. THIS MAY DUE TO INTERNAL EMAIL OR FIREWALL SECURITY SETTINGS.*

- ❑ Please make sure to check your "JUNK MAIL" for the DocuSign Email containing the grant agreement to be executed. Designated signatories MUST use the email sent to them directly and not a copied email forwarded from another person/source.
- ❑ Grant Agreement (Please review the entire document and the instructions below)
- ❑ Approved line-item program budget
- ❑ Report due dates and submission instructions
- ❑ Special Condition(s) Page
- ❑ Authorized signature page**

****In order to reduce paper use and to save processing time, ACJC has moved to an electronic signature process for grant agreements through DocuSign. Using an electronic signature process will allow for faster execution of grant agreements and, ultimately, getting funding to grant recipients earlier. As a grantee, you are not required to sign-up for the DocuSign service, only to utilize it in executing the Victim Compensation grant agreement document. Using the DocuSign service will allow ACJC to be more efficient and streamline our grant agreement process.**

The process for processing grant agreements through DocuSign is simple. The Project Official will receive an email from ACJC through the DocuSign system. The Project Official can download the grant agreement documents and process the Agreement through the usual approval process used, such as running the Agreement through the chain of command or getting approval from the Board of Supervisors or City Council. Once approved, the Project Official will go back to the DocuSign link, click on it, and type in the name and email of the Authorized Signatory, such as the agency head or designee, Board of Supervisor Chair, or Mayor, and Legal Counsel (if applicable). The document will be electronically routed to those identified for their signatures. Upon all grantee signatures, the document will be sent automatically to the ACJC Executive Director for signature. Once all parties have signed the Agreement, copies will be sent to the Project Official and all signatories. We then have an executed grant agreement and can begin processing finance reports.

To help expedite your agency's receipt of grant funds, please review the grant agreement and then forward it to the appropriate approval authority for execution. Funds cannot be disbursed to your agency until the Agreement is properly and fully executed.

Your agency is the GRANTEE for the purpose of this grant agreement. On the signature page, under the heading FOR GRANTEE, there are three (3) lines that must be completed (Non-Profit does not need Legal Council approval).

A. The first line is the signature of the individual ***authorized to make agreements*** for your governmental subdivision.

1. For County Offices, the Chairman of the County Board of Supervisors ***must*** sign the grant agreement. If someone other than the Chairman is designated to sign agreements, please enclose a copy of the resolution authorizing this. If the Board's rules require an attestment or certification of the signature by the Clerk of the Board, the agency MUST notify ACJC to add into DocuSign on the grant agreements the signature page.

2. A signed copy of the Board of Supervisors or City Council's approved agenda item or resolution listing this grant agreement must be returned to the Criminal Justice Commission.

B. The line requesting the signature of the ***Legal counsel for GRANTEE*** should be signed by the Deputy County Attorney or Assistant Attorney General who provides legal counsel to the governing body. This individual is approving the Agreement as to form and attesting to the legal authority of the governing body to perform the agreement activities.

C. The final line under FOR GRANTEE refers to the Arizona Revised Statute that gives the governing body legal authority to perform the agreement activities.

Steps to sign a DocuSign document.

DocuSign is an electronic document service that allows parties to an agreement to review a document and apply an e-signature to that document. DocuSign is a safe and secure way to electronically send and sign documents. You do not need the DocuSign service to sign a document. Please check your "JUNK MAIL" to ensure that the DocuSign email was received.

ACJC will send you a DocuSign email containing a link to your document.

Review the DocuSign email:
Open the email and review the message from the sender. Click **REVIEW DOCUMENT** to begin the signing process.

Agree to sign electronically:
Review the consumer disclosure, and select the checkbox **I agree to use Electronic Records and Signatures**.

Important! To view and sign the documents, you must agree to conduct business electronically.

Note: To view additional options, click the **OTHER ACTIONS** button on the right side of the page. Other Actions are options such as Decline to Sign if you want to decline to sign the document or Assign to Someone Else if you are not the appropriate person to sign the document.

Click **CONTINUE** to begin the signing process.
Start the signing process:
Click the **START** tag on the left to begin the signing process. You are taken to the first tag requiring your action.

Click the **SIGN** tag.
If this is the first time you are using DocuSign, You are asked to Adopt Your Signature.

To Adopt your initials and signature:
To adopt your initials and signature, verify that your name and initials are correct. If not, change them as needed.
Click on Choose Change Style to see a variety of signature and initial styles.
You can also choose to draw your own signature and initials or upload a signature and initials.

Once you have made your choice, Click **ADOPT AND SIGN** to adopt and save your signature information and return to the document.

Sign the document:
After reviewing the document you are now ready to sign the document. Click on all of the signature tags to place your initials or signature on the document. If you miss one and try to submit, you will be taken to the tags that still require a signature or initials.

For any red boxes in the document, type in the relevant information, such as your title.

Confirm signing:
When you finish clicking all signature tags in the document, confirm signing by clicking **FINISH.** A message appears stating that you have completed your document. You can now download a PDF copy or print a copy of the document. The sender receives an email with the signed document attached, and the signed document appears in their DocuSign account.

Sign up for a DocuSign account:
After signing the document and clicking the Finish button you will get a message offering to Sign up for a DocuSign account and save the document in your own account. You do not need to sign up for an account. A DocuSign account allows you to save all documents in an account. Keep in mind that after all parties have signed the document you will receive a pdf copy of the agreement. If you do not desire a DocuSign account just choose No Thanks.

Finish
This completes the process to sign a DocuSign document. If you have any questions, concerns, or problems with the DocuSign e-signature process, please contact your ACJC grant coordinator.

If you have any questions, please feel free to contact Dorinda Johns at (602) 364-1186 or via email at vsadmin@azcjc.gov for clarification.

DocuSign SECURED

Certificate Of Completion

Envelope Id: 8E3C152B1E544974BCFCDDDE7DEFDBE9 | Status: Sent

Subject: Please DocuSign: Gila County Attorney's Office VC-21-052_Crime Victim Compensation GA.pdf, Vict...

Source Envelope:

Document Pages: 22	Signatures: 0	Envelope Originator:
Certificate Pages: 5	Initials: 0	Heather Bohnet
AutoNav: Enabled		hbohnet@azcjc.gov
EnvelopeId Stamping: Enabled		IP Address: 208.87.239.180
Time Zone: (UTC-08:00) Pacific Time (US & Canada)		

Record Tracking

Status: Original 6/26/2020 10:13:47 AM	Holder: Heather Bohnet hbohnet@azcjc.gov	Location: DocuSign
Security Appliance Status: Connected	Pool: StateLocal	
Storage Appliance Status: Connected	Pool: Arizona Criminal Justice Commission	Location: DocuSign

Signer Events	Signature	Timestamp
Bradley D. Beauchamp bbeauchamp@gilacountyaz.gov Security Level: Email, Account Authentication (None) **Electronic Record and Signature Disclosure:** Not Offered via DocuSign		Sent: 8/14/2020 11:31:27 AM
Bradley D. Beauchamp bbeauchamp@gilacountyaz.gov Security Level: Email, Account Authentication (None) **Electronic Record and Signature Disclosure:** Not Offered via DocuSign		
Andrew LeFevre alefevre@azcjc.gov Security Level: Email, Account Authentication (None) **Electronic Record and Signature Disclosure:** Not Offered via DocuSign		

In Person Signer Events	Signature	Timestamp

Editor Delivery Events	Status	Timestamp

Agent Delivery Events	Status	Timestamp
Debra Blair dblair@gilacountyaz.gov Security Level: Email, Account Authentication (None)	VIEWED Using IP Address: 104.255.78.248	Sent: 6/26/2020 10:18:08 AM Viewed: 8/14/2020 11:28:46 AM Completed: 8/14/2020 11:31:27 AM

Electronic Record and Signature Disclosure:
Accepted: 8/14/2020 11:28:46 AM
ID: 29e7dfb3-3b15-4dcf-b0c3-c0594a36ec10
Company Name: Carahsoft OBO Arizona Criminal Justice Commission

Intermediary Delivery Events	Status	Timestamp

Certified Delivery Events	Status	Timestamp

ELECTRONIC RECORD AND SIGNATURE DISCLOSURE

From time to time, Carahsoft OBO Arizona Criminal Justice Commission (we, us or Company) may be required by law to provide to you certain written notices or disclosures. Described below are the terms and conditions for providing to you such notices and disclosures electronically through the DocuSign system. Please read the information below carefully and thoroughly, and if you can access this information electronically to your satisfaction and agree to this Electronic Record and Signature Disclosure (ERSD), please confirm your agreement by selecting the check-box next to 'I agree to use electronic records and signatures' before clicking 'CONTINUE' within the DocuSign system.

Getting paper copies

At any time, you may request from us a paper copy of any record provided or made available electronically to you by us. You will have the ability to download and print documents we send to you through the DocuSign system during and immediately after the signing session and, if you elect to create a DocuSign account, you may access the documents for a limited period of time (usually 30 days) after such documents are first sent to you. After such time, if you wish for us to send you paper copies of any such documents from our office to you, you will be charged a $0.00 per-page fee. You may request delivery of such paper copies from us by following the procedure described below.

Withdrawing your consent

If you decide to receive notices and disclosures from us electronically, you may at any time change your mind and tell us that thereafter you want to receive required notices and disclosures only in paper format. How you must inform us of your decision to receive future notices and disclosure in paper format and withdraw your consent to receive notices and disclosures electronically is described below.

Consequences of changing your mind

If you elect to receive required notices and disclosures only in paper format, it will slow the speed at which we can complete certain steps in transactions with you and delivering services to you because we will need first to send the required notices or disclosures to you in paper format, and then wait until we receive back from you your acknowledgment of your receipt of such paper notices or disclosures. Further, you will no longer be able to use the DocuSign system to receive required notices and consents electronically from us or to sign electronically documents from us.

All notices and disclosures will be sent to you electronically

Unless you tell us otherwise in accordance with the procedures described herein, we will provide electronically to you through the DocuSign system all required notices, disclosures, authorizations, acknowledgements, and other documents that are required to be provided or made available to you during the course of our relationship with you. To reduce the chance of you inadvertently not receiving any notice or disclosure, we prefer to provide all of the required notices and disclosures to you by the same method and to the same address that you have given us. Thus, you can receive all the disclosures and notices electronically or in paper format through the paper mail delivery system. If you do not agree with this process, please let us know as described below. Please also see the paragraph immediately above that describes the consequences of your electing not to receive delivery of the notices and disclosures electronically from us.

How to contact Carahsoft OBO Arizona Criminal Justice Commission:

You may contact us to let us know of your changes as to how we may contact you electronically, to request paper copies of certain information from us, and to withdraw your prior consent to receive notices and disclosures electronically as follows:
To contact us by email send messages to: alefevre@azcjc.gov

To advise Carahsoft OBO Arizona Criminal Justice Commission of your new email address

To let us know of a change in your email address where we should send notices and disclosures electronically to you, you must send an email message to us at alefevre@azcjc.gov and in the body of such request you must state: your previous email address, your new email address. We do not require any other information from you to change your email address.

If you created a DocuSign account, you may update it with your new email address through your account preferences.

To request paper copies from Carahsoft OBO Arizona Criminal Justice Commission

To request delivery from us of paper copies of the notices and disclosures previously provided by us to you electronically, you must send us an email to alefevre@azcjc.gov and in the body of such request you must state your email address, full name, mailing address, and telephone number. We will bill you for any fees at that time, if any.

To withdraw your consent with Carahsoft OBO Arizona Criminal Justice Commission

To inform us that you no longer wish to receive future notices and disclosures in electronic format you may:

i. decline to sign a document from within your signing session, and on the subsequent page, select the check-box indicating you wish to withdraw your consent, or you may;

ii. send us an email to alefevre@azcjc.gov and in the body of such request you must state your email, full name, mailing address, and telephone number. We do not need any other information from you to withdraw consent.. The consequences of your withdrawing consent for online documents will be that transactions may take a longer time to process..

Required hardware and software

The minimum system requirements for using the DocuSign system may change over time. The current system requirements are found here: https://support.docusign.com/guides/signer-guide-signing-system-requirements.

Acknowledging your access and consent to receive and sign documents electronically

To confirm to us that you can access this information electronically, which will be similar to other electronic notices and disclosures that we will provide to you, please confirm that you have read this ERSD, and (i) that you are able to print on paper or electronically save this ERSD for your future reference and access; or (ii) that you are able to email this ERSD to an email address where you will be able to print on paper or save it for your future reference and access. Further, if you consent to receiving notices and disclosures exclusively in electronic format as described herein, then select the check-box next to 'I agree to use electronic records and signatures' before clicking 'CONTINUE' within the DocuSign system.

By selecting the check-box next to 'I agree to use electronic records and signatures', you confirm that:

- You can access and read this Electronic Record and Signature Disclosure; and
- You can print on paper this Electronic Record and Signature Disclosure, or save or send this Electronic Record and Disclosure to a location where you can print it, for future reference and access; and
- Until or unless you notify Carahsoft OBO Arizona Criminal Justice Commission as described above, you consent to receive exclusively through electronic means all notices, disclosures, authorizations, acknowledgements, and other documents that are required to be provided or made available to you by Carahsoft OBO Arizona Criminal Justice Commission during the course of your relationship with Carahsoft OBO Arizona Criminal Justice Commission.

ARF-6279 **Consent Agenda Item 5. C.**

Regular BOS Meeting

Meeting Date:	10/06/2020		
Submitted For:	Mary Springer, Finance Director		
Submitted By:	Betty Hurst, Contracts Administrator		
Department:	Finance		
Fiscal Year:	FY 2020-2021	Budgeted?:	Yes
Contract Dates Begin & End:	July 1, 2019 to June 30, 2020	Grant?:	No
Matching Requirement?:	No	Fund?:	Renewal

Information

Request/Subject

Extension of Intergovernmental Agreement (IGA) - Restoration to Competency Services with Yavapai County.

Background Information

On September 7, 2010, the Gila County Board of Supervisors entered into an IGA between Yavapai County and Gila County for Restoration to Competency (RTC) services. The initial term of the IGA was from June 1, 2010 to June 30, 2011, and the IGA allowed for three one-year renewal periods upon mutual agreement of the parties.

The Gila County Board of Supervisors also designated Yavapai County RTC as Gila County's primary competency restoration program effective June 1, 2010, by Resolution No. 10-09-02.

On July 5, 2011, the Board approved the extension of said IGA through FY 2011-2012.

On June 26, 2012, the Board approved the extension of said IGA through FY 2012-2013.

On June 25, 2013, the Board approved the extension of said IGA through FY 2013-2014.

On June 24, 2014, the Board approved a new IGA which expires on June 30, 2015.

On July 28, 2015, the Board approved a new IGA which expires on June 30, 2018.

On October 5, 2018, the Board approved a new IGA which expires on June 30, 2023.

On November 5, 2019, the Board approved the extension of said IGA through FY 2019-2020.

Evaluation

Yavapai County currently contracts with Wexford Health Sources for RTC services within Yavapai County's Adult Juvenile Facilities and has bed space sufficient to accept Gila County's Rule 11 inmates.

The cost to Gila County to contract with Yavapai County will remain the same at $350 for the first day and $250 for each day thereafter. Some additional costs may arise for non-formulary mediations, court testimony, etc.

Conclusion

Approval of the Extension of the IGA between Yavapai County and Gila County for Restoration to Competency Services will run for a one-year term from July 1, 2020 to June 30, 2021, with the option to renew for two one-year periods upon mutual agreement of the parties. All terms and conditions under Resolution No. 10-09-02 apply.

Recommendation

Staff recommends approval of the Extension of IGA between Yavapai County and Gila County for Restoration to Competency Services for a term effective July 1, 2020, and continue in effect until June 30, 2021.

Suggested Motion

Approval of Extension of Intergovernmental Agreement-Restoration to Competency Services that is between Yavapai County and Gila County for one year (July 1, 2020, to June 30, 2021) with the option for two one-year renewals upon mutual agreement of both counties.

Attachments

Extension of IGA-Restoration of Competency Services 2020-2021

Extension of IGA Restoration to Competency ervices 2019-2020

IGA-Restoration to Competency Services

IGA for Restoration to Competency Services 07-01-14 to 06-30-15

YAVAPAI COUNTY-RESTORATION TO COMPETENCY SERVICES-2015-2016

IGA Ext'd to 6-30-14

IGA Ext'd to 6-30-13

IGA Ext'd to 6-30-12

IGA for Restoration to Competency Services 06-01-10 to 06-30-11

Resolution

Extension of Intergovernmental Agreement

Restoration to Competency Services

WHEREAS, **Yavapai County (the "PROVIDER")** and Gila County (the **"CLIENT"**) have previously entered into an Intergovernmental Agreement (the "IGA"); whereby Yavapai County has agreed to provide Restoration to Competency Services to Gila County and;

WHEREAS, the IGA provides that following the expiration of its initial term the IGA may be renewed for up to three additional renewal terms by mutual agreement of the parties; and

WHEREAS, the Parties wish to extend the IGA for an additional one-year term.

NOW THEREFORE, THE PARTIES AGREE AS FOLLOWS

The Agreement between the Parties for Restoration to Competency Services is hereby extended for an additional one-year term commencing on July 1, 2020 and terminating on June 30, 2021 subject to the same terms and conditions as set forth in said Agreement.

YAVAPAI COUNTY:

9-2-2020

Chairman, Board of Supervisors Date

ATTEST:

Clerk of the Board

GILA COUNTY:

Chairman, Board of Supervisors Date

ATTEST:

Clerk of the Board

Determinations of Counsel

The foregoing Intergovernmental Agreement between Provider and Client has been reviewed pursuant to A.R.S. 11-952 by the undersigned, who have determined that it is in proper form and is within the powers and authority granted under the laws of the State of Arizona to those parties to the Intergovernmental Agreement represented by the undersigned.

YAVAPAI COUNTY:

The County Attorney's Office

9-16-20

Date

GILA COUNTY:

The County Attorney's Office

Date

Extension of Intergovernmental Agreement

Restoration to Competency Services

WHEREAS, Yavapai County (the "PROVIDER") and Gila County (the "CLIENT"), have previously entered into an Intergovernmental Agreement (the "IGA"); whereby Yavapai County has agreed to provide Restoration to Competency Services to Gila County and

WHEREAS, the IGA provides that following the expiration of its initial term the IGA may be renewed for up to three additional renewal terms by mutual agreement of the parties; and

WHEREAS, the Parties wish to extend the IGA for an additional one-year term.

NOW THEREFORE, THE PARTIES AGREE AS FOLLOWS

The Agreement between the Parties for Restoration to Competency Services is hereby extended for an additional one-year term commencing on July 1, 2019 and terminating on June 30, 2020 subject to the same terms and conditions as set forth in said Agreement.

YAVAPAI COUNTY:

Kendall W. Garrison 9/23/19

Chairman, Board of Supervisors Date

ATTEST:

Clerk of the Board

GILA COUNTY:

11/5/19

Chairman, Board of Supervisors Date

ATTEST:

Marian Sheppard

Clerk of the Board

Determinations of Counsel

The foregoing Intergovernmental Agreement provisions have been reviewed pursuant to A.R.S § 11-952 by the undersigned who have determined that they are in the proper form and are within the powers and authority granted under the laws of the State of Arizona to the Parties represented by the undersigned.

Counsel for Provider

The County Attorney's Office

10/2/19

Date

Counsel for Client

Jefferson Dalton, for Charles Ahne

Deputy County Attorney

11/5/19

Date

Intergovernmental Agreement
between
Yavapai County and Gila County
for
Restoration to Competency Services

This Intergovernmental Agreement (IGA) is entered into by and between Yavapai County, ("Provider") and Gila County ("Client"), bodies politic and corporate of the State of Arizona, pursuant to A.R.S. § 11-952.

Recitals

A. The Parties may contract for services and enter into agreements with one another for joint or cooperative action pursuant to A.R.S. § 11-951, et seq.

B. The Parties desire to enter into an agreement for the provision of restoration to competency services for Client pre-trial inmates.

C. The Parties acknowledge that the Client's inmates will remain under the jurisdiction of Client during the period for which services are being provided by Provider pursuant to this Agreement and that Client will assign a defense attorney and prosecutor to the Client's case during the entirety of the service period.

NOW, THEREFORE, The Parties, pursuant to the above, and in consideration of the matters and things hereinafter set forth, do mutually agree as follows:

Agreement

1. **Purpose.** The purpose of this IGA is to set forth the terms and conditions for admission of Client's pre-trial inmates into Provider's Restoration to Competency Program ("RTC Program") and provision of restoration services to Client inmates in the Provider's Adult Jail Facilities (AJF).

2. **Scope.** Provider will receive and detain Client's pre-trial inmates after the inmate has been determined by the Superior Court in and for the Client's county through the Rule 11 process as not competent to stand trial and who are medically and administratively fit to be incarcerated by Provider, for the purpose of admitting the inmates into and providing the restoration services of the Provider's RTC Program.

   Client shall e-mail SheriffDetentionRTC@Co.Yavapai.AZ.US to inform the RTC team of Client's need for placement in Provider's program. A member of the RTC team will promptly reply to sender with a letter indicating what information is needed in order to determine acceptance into the program. If the program has no available bed space upon receipt of the initial e-mail from Client, the Client will be advised immediately and will be given an estimated date of bed space availability. The information requested will constitute the "Request Package."

Provider will determine whether to accept the inmate within 3 business days after receiving the complete Request Package. Provider reserves the right to refuse to accept a Client's inmate or return an accepted inmate for any reason. If the inmate is accepted, Client shall deliver the inmate to the Provider's AJF Facility at a time specified by Provider. Provider will house the Client's inmate based upon classification criteria established by the Provider's AJF and will provide for the onsite care, supervision, feeding and medical care, behavioral health and dental care of Client's inmates except as otherwise provided in this IGA. A court order from Client County is required for admission to the Provider's RTC Program (A.R.S. § 13-4510). The Court order committing an inmate into the Provider's RTC program must include authorization to administer medications involuntarily. The Provider's RTC program will begin the intake process after receiving the inmate and all necessary paperwork.

The Provider's RTC staff shall provide Client's Court with status reports on the inmate's progress every sixty (60) days from date the inmate was admitted into the Provider's RTC program. Date of admission shall be the date that all of the following actions are complete: acceptance by the Provider's RTC program, receipt by the Provider's RTC staff of the completed court order and other Rule 11 paperwork, and physical transfer of the inmate to the Provider's AJF.

It is the intention of the Parties that the inmate will remain at the Provider's AJF until a recommendation regarding competency is completed unless one of the following occurs:

1. If, at any time during the process of restoration it is determined that the inmate requires an intensive inpatient restoration setting in which case the Provider's RTC staff shall so notify the Client to allow the Client to seek issuance of an order by the Superior Court in and for the Client's county for transfer of the inmate to Arizona State Hospital (ASH) if applicable.

2. The Client directs that the Client's inmate be transferred to its custody pursuant to limitations imposed law with respect to competency or charges.

3. The Provider otherwise determines that the inmate is no longer appropriate for housing at the Provider's AJF. Client and Provider agree to exchange such documentation as is required by RTC staff or County Court in as expedient a fashion as reasonably possible.

Any non-English speaking inmates will be provided interpretation services. Costs for this service, as required, are included in the daily rate.

The Client shall, whenever indicated, initiate court-ordered treatment proceedings under A.R.S. Title 36, Chapter 5 prior to transfer of an inmate. If court-ordered treatment proceedings become necessary or desirable at any time during the inmate's stay at the Provider's RTC program, or otherwise upon the request of Provider's RTC program, the Client will initiate such proceedings in the Client's county and shall be responsible for the costs of evaluation and court proceedings associated with such proceedings, as well as provision of mental health treatment services occurring as a result of court-ordered

treatment. Client shall ensure that Provider's RTC physicians are listed in any treatment plan and that a copy of the treatment plan is delivered to Provider's RTC Program Director.

Client shall be separately responsible for paying any offsite health services for Client inmates housed at the Provider's AJF. Offsite health services include hospital inpatient or outpatient treatment or surgeries, specialty physician consults, or diagnostic services that Provider's AJF does not provide onsite for its inmates. Client shall also be responsible for paying any expenses related to exceptional medical care including, but not limited to, "non-formulary medications" as defined by the Provider's health care vendor contract.

Upon notification that a Client's inmate is to receive or has received offsite health services, Provider shall so notify offsite health providers and Client and confirm that such services are the financial responsibility of Client. If Client inmate must be transported offsite to receive health services in an inpatient setting, Provider shall provide transport and security for the inmate for a maximum of one shift to allow Client to make arrangements to either transport the inmate back to a provider in Client's county or to send officers to relieve Provider's officers at local inpatient facility.

Transportation of inmates to any Court or any other location, as ordered by the Superior Court in and for Client's county or done at the request of the Client shall be Client's responsibility.

Client shall specify a single point of contact for Client for all inquiries. Provider shall specify a single point of contact for RTC program service coordination and an additional single point of contact for billing and finance inquiries.

3. **Financing**. For each inmate admitted to the RTC Program Client will pay Provider $350.00 for the initial day and $250.00 per day thereafter for inmate housing, routine onsite healthcare services and costs of restoration services. Client shall be billed separately for exceptional onsite healthcare services including Non-Formulary Medications as defined in Provider's healthcare vendor contract. The billing day as defined herein applies to each Client inmate who is an inmate in, or under control of the Provider's AJF. Neither the acceptance of the inmate into the program nor the acceptance of per diem payments is a guarantee of restoration to competency for any specific inmate. The RTC per diem rate shall remain in effect until June 30, 2019, at which time the Parties shall have agreed to a new RTC per diem rate pursuant to this IGA. Client must pay community providers directly for all health services provided outside the Provider's AJF.

Client shall reimburse Provider at the hourly rate of $30.00 per corrections officer hour and $.55 per mile for van transport for transporting a Client inmate outside the Provider's AJF. A minimum of 2 corrections officers will accompany the Client inmate per Provider policy. In the event a Provider County corrections officer or Sheriff's Deputy must post an officer at an offsite health service location Client shall reimburse Provider at the

hourly rate of $30.00 per corrections officer hour.

In the event Provider RTC staff is required by the Superior Court in and for Client's county to appear in court via video, Client shall reimburse Provider at the hourly rate of $85.00. Client county is responsible for procuring the tele-video equipment that is compatible with that utilized by Provider's RTC program and for any costs required for operation of the tele-video equipment.

In the event legal counsel is required on behalf of the Provider RTC program or staff related to provision of service to Client inmates, Client shall reimburse Provider 100% of billed charges for the Provider's RTC contracted legal service.

Criteria and Rules Governing Billing:

> For purposes of this IGA a "billable day" is that period commencing at 0000 hours and ending at 2359 hours that same day, or any fractional part thereof, of any day the Client inmate is in the custody or control of Provider's AJF.

Criteria for Assessment of Billing:

> The costs of housing a Client inmate shall commence on the day the inmate was booked into the Provider's AJF. Provider shall cease charging the RTC per diem under the guidelines established earlier in this IGA under the definition of "billable day."
>
> In the event a Client inmate escapes, billing charges will cease to accrue after 2359 hours of the day of escape. Billing charges will begin again on the day that the inmate is recaptured and is actually being held in the Provider's AJF.

At the end of each month after a Client inmate is admitted into the RTC Program, Provider will submit to Client a statement of charges. This statement shall provide the following information: name of inmate, booking date and hour, release date and hour, indication of booking day billing or subsequent day billing, billing period, daily rates, total billing days, and the total bill. Client shall be allowed access to necessary computer systems in a timely manner as necessary to verify the billing.

Client shall notify Provider in writing of any contested charges within 30 days following receipt of a monthly billing. If Client notifies Provider of a dispute within 30 days of receipt of the monthly billing, Client may withhold payment on each inmate for whom billing is disputed until the dispute has been resolved. It is understood and agreed that the billed charges are deemed accepted and will be paid if no dispute notice is received by Provider within 30 days after the receipt on the monthly billing. Disputes about the billing statement shall be jointly reviewed by both parties and satisfactorily resolved within 45 days of the monthly billing.

Excluding contested charges all charges shall be paid within sixty days of receipt of a monthly billing. Contested charges shall be paid within 30 days of resolution of the dispute. A mutually acceptable third party may arbitrate charges remaining unresolved after the 60-day period.

Client shall pay interest on outstanding charges beginning on the 10th day after resolution of the billing at a rate of 10% per annum until paid. Upon paying a previously disputed charge, Client will attach a statement detailing the specific charges that are being paid. Client will attach statement to each check submitted to County indicating the dates for which the check is to be applied.

4. **Term**. The initial term of this IGA shall be effective as of July 1, 2018 and shall continue in effect until June 30, 2019. Thereafter it may be renewed annually beginning on July 1 for up to three renewal terms by mutual agreement of the Parties.

5. **Disposal of Property**. Upon the termination of this IGA, all property involved shall revert back to its owner. Termination shall not relieve any party from liabilities or costs already incurred under this IGA, nor affect any ownership of property pursuant to this IGA.

6. **Indemnification.** Each party (as Indemnitor) agrees to indemnify, defend and hold harmless the other party (as Indemnitee) from and against any and all claims, losses, liability, costs or expenses (including reasonable attorney's fees) (hereinafter collectively referred to as "claims") arising out of bodily injury of any person (including death) or property damage, but only to the extent that such claims which result in vicarious/derivative liability to the Indemnitee, are caused by the act, omission, negligence, misconduct, or other fault of the Indemnitor, its officers, officials, employees, or volunteers. Client acknowledges that health care services at the Provider's AJF are provided by independent contractors.

7. **Immigration Law Compliance Warranty:** As required by A.R.S. § 41-4401, each party hereby warrants its compliance with all federal immigration laws and regulations that relate to its employees and A.R.S. § 23-214(A). Each party further warrants that after hiring an employee, it verifies the employment eligibility of the employee through the e-verify program. If either party uses any subcontractors in performance of the Agreement, subcontractors shall warrant their compliance with all federal immigration laws and regulations that relate to its employees and A.R.S. § 23-214(A), and subcontractors shall further warrant that after hiring an employee, such subcontractor verifies the employment eligibility of the employee through the e-verify program. A breach of this warranty shall be deemed a material breach of the Agreement subject to penalties up to and including termination of this Agreement. A party shall not be deemed in material breach if it and its subcontractors establish compliance with the employment verification provisions of Sections 274A and 274B of the federal Immigration and Nationality Act and the e-verify requirements contained in A.R.S. § 23-214(A).

Each party retains the legal right to inspect the papers of the other party and its subcontractors engaged in performance of this Agreement to ensure that the other party and its subcontractors are complying with the warranty. Any inspection will be conducted after reasonable notice and at reasonable times. If state law is amended, the parties may modify this paragraph consistent with state law.

8. **Israel Boycott Certification:** Contractor hereby certifies that it is not currently engaged in and will not, for the duration of this agreement, engage in a boycott of Israel as required by A.R.S. § 35-393.01. Violation of this certification by Contractor may result in action by County up to and including termination of this agreement.

9. **Insurance.** Each party shall obtain and maintain at its own expense, during the entire term of this Contract the following type(s) and amounts of insurance:

   a) Commercial General Liability in the amount of $1,000,000.00 combined single limit Bodily Injury and Property Damage.

   b) Commercial or Business automobile liability coverage for owned, non-owned and hired vehicles used in the performance of this Contract with limits in the amount of $1,000,000.00 combined single limit or $1,000,000.00 Bodily Injury, $1,000,000.00 Property Damage.

   c) If this Contract involves professional services, professional liability insurance in the amount of $1,000,000.00.

   d) If required by law, workers' compensation coverage including employees' liability coverage.

   Parties to this agreement shall provide thirty (30) days written notice to all parties to this IGA of cancellation, non-renewal or material change of coverage.

   The above requirement may be alternatively met through self-insurance pursuant to A.R.S. §§ 11-261 and 11-981 or participation in an insurance risk pool under A.R.S. § 11.952.01 at no less than the minimal coverage levels set forth in this article. Parties to this agreement shall provide thirty (30) days written notice to all other parties of cancellation, non-renewal or material change of coverage.

10. **Compliance with Laws**. The parties shall comply with all federal, state and local laws, rules, regulations, standards and Executive Orders, without limitation to those designated within this IGA. The laws and regulations of the State of Arizona shall govern the rights of the parties, the performance of this IGA and any disputes hereunder. Any action relating to this IGA shall be brought in an Arizona court in Provider County.

11. **Non-Discrimination**. The parties shall not discriminate against any Provider or Client employee, client or any other individual in any way because of that person's age, race, creed, color, religion, sex, disability or national origin in the course of carrying out their

duties pursuant to this IGA. The parties shall comply with the provisions of Executive Order 75-5, as amended by Executive Order 99-4, which is incorporated into this IGA by reference, as if set forth in full herein.

12. **ADA**. The parties shall comply with all applicable provisions of the Americans with Disabilities Act (Public Law 101-336, 42 U.S.C. 12101-12213) and all applicable federal regulations under the Act, including 28 CFR Parts 35 and 36.

13. **Severability**. If any provision of this IGA or any application thereof to the parties or any person or circumstances, is held invalid, such invalidity shall not affect other provisions or applications of this IGA which can be given effect, without the invalid provision or application and to this end the provisions of this IGA are declared to be severable.

14. **Conflict of Interest**. This Agreement is subject to cancellation for conflict of interest as provided in A.R.S. § 38-511, which is hereby fully incorporated herein by this reference as if the same as if fully set forth in this contract.

15. **Non-Appropriation.** Notwithstanding any other provision in this IGA, this IGA may be terminated if for any reason the Provider's or Client's Board of Supervisors does not appropriate sufficient monies for the purpose of maintaining this IGA. In the event of such cancellation, the parties shall have no further obligation to each other except for payment for services rendered prior to cancellation.

16. **Legal Authority.** Neither party warrants to the other its legal authority to enter into this IGA. If a court, at the request of a third person, should declare that either party lacks authority to enter into this IGA, or any part of it, then the IGA, or parts of it affected by such order, shall be null and void, and no recovery may be had by either party against the other for lack of performance or otherwise.

17. **Worker's Compensation.** Each party shall comply with the notice of A.R.S. § 23-1022 (E). For purposes of A.R.S. § 23-1022, irrespective of the operations protocol in place, each party is solely responsible for the payment of Worker's Compensation benefits for its employees.

18. **No Joint Obligations**. Neither party shall be liable for any debts, accounts, obligations or other liabilities whatsoever of the other, including (without limitation) the other party's obligation to withhold Social Security and income taxes for itself or any of its employees.

19. **No Third-Party Beneficiaries**. Nothing in the provisions of this IGA is intended to create duties or obligations to or rights in third parties not parties to this IGA or affect the legal liability of either party to the IGA by imposing any standard of care with respect to the maintenance of public facilities different from the standard of care imposed by law.

20. **Notice**. Any notice required or permitted to be given under this IGA shall be in writing and shall be served by delivery or by certified mail upon the other party as follows (or at such other address as may be identified by a party in writing to the other party):

Provider:

Yavapai County RTC
1015 Fair Street
Prescott, AZ 86303

Client:

Gila County
Attn: James Menlove
1400 E. Ash Street
Globe, Az 85501

21. Entire Agreement. This document constitutes the entire Agreement between the parties pertaining to the subject matter hereof, and all prior or contemporaneous agreements and understandings, oral or written, are hereby superseded and merged herein. This IGA shall not be modified, amended, altered or extended except through a written amendment signed by both Parties.

APPROVALS

CLIENT:

Date October 30, 2018

GILA COUNTY BOARD OF SUPERVISORS

Tim R. Humphrey, Chairman of the Board

ATTEST

Marian Sheppard, Clerk of the Board

APPROVED AS TO FORM

Jeff Dalton for Jeff Dalton

Jefferson R. Dalton,
Deputy Gila County Attorney, Civil Bureau Chief
for Bradley D. Beauchamp, County Attorney

PROVIDOR:

Date October 5, 2018

Yavapai County

Chairman of the Board

ATTEST

Kim Kapin, Clerk of the Board

APPROVED AS TO FORM

Martin Brennan, Deputy County Attorney

Intergovernmental Agreement
between
Yavapai County and Gila County
for
Restoration to Competency Services

This Intergovernmental Agreement (IGA) is entered into by and between Yavapai County, ("Provider") and Gila County ("Client"), bodies politic and corporate of the State of Arizona, pursuant to A.R.S. § 11-952.

Recitals

A. The Parties may contract for services and enter into agreements with one another for joint or cooperative action pursuant to A.R.S. § 11-951, et seq.

B. The Parties desire to enter into an agreement for the provision of restoration to competency services for Client pre-trial inmates.

C. The Parties acknowledge that the Client's inmates will remain under the jurisdiction of Client during the period for which services are being provided by Provider pursuant to this Agreement and that Client will assign a defense attorney and prosecutor to the Client's case during the entirety of the service period.

NOW, THEREFORE, The Parties, pursuant to the above, and in consideration of the matters and things hereinafter set forth, do mutually agree as follows:

Agreement

1. **Purpose.** The purpose of this IGA is to set forth the terms and conditions for admission of Client's pre-trial inmates into Provider's Restoration to Competency Program ("RTC Program") and provision of restoration services to Client inmates in the Provider's Adult Jail Facilities (AJF) .

2. **Scope**. Provider will receive and detain Client's pre-trial inmates after the inmate has been determined by the Superior Court in and for the Client's county through the Rule 11 process as not competent to stand trial and who are medically and administratively fit to be incarcerated by Provider, for the purpose of admitting the inmates into and providing the restoration services of the Provider's RTC Program.

   Client shall e-mail SheriffDetentionRTC@Co.Yavapai.AZ.US to inform the RTC team of Client's need for placement in Provider's program. A member of the RTC team will promptly reply to sender with a letter indicating what information is needed in order to determine acceptance into the program. If the program has no available bed space upon receipt of the initial e-mail from Client, the Client will be advised immediately and will be given an estimated date of bed space availability. The information requested will constitute the "Request Package."

   Provider will determine whether to accept the inmate within 3 business days after receiving the complete Request Package. Provider reserves the right to refuse to accept

a Client's inmate or return an accepted inmate for any reason. If the inmate is accepted, Client shall deliver the inmate to the Provider's AJF Facility at a time specified by Provider. Provider will house the Client's inmate based upon classification criteria established by the Provider's AJF and will provide for the onsite care, supervision, feeding and medical care, behavioral health and dental care of Client's inmates except as otherwise provided in this IGA. A court order from Client County is required for admission to the Provider's RTC Program (A.R.S. § 13-4510). The Court order committing an inmate into the Provider's RTC program must include authorization to administer medications involuntarily. The Provider's RTC program will begin the intake process after receiving the inmate and all necessary paperwork.

The Provider's RTC staff shall provide Client's Court with status reports on the inmate's progress every sixty (60) days from date the inmate was admitted into the Provider's RTC program. Date of admission shall be the date that all of the following actions are complete: acceptance by the Provider's RTC program, receipt by the Provider's RTC staff of the completed court order and other Rule 11 paperwork , and physical transfer of the inmate to the Provider's AJF.

It is the intention of the Parties that the inmate will remain at the Provider's AJF until a recommendation regarding competency is completed unless one of the following occurs:

1. If, at any time during the process of restoration it is determined that the inmate requires an intensive inpatient restoration setting in which case the Provider's RTC staff shall so notify the Client to allow the Client to seek issuance of an order by the Superior Court in and for the Client's county for transfer of the inmate to Arizona State Hospital (ASH) if applicable.

2. The Client directs that the Client's inmate be transferred to its custody pursuant to limitations imposed law with respect to competency or charges.

3. The Provider otherwise determines that the inmate is no longer appropriate for housing at the Provider's AJF. Client and Provider agree to exchange such documentation as is required by RTC staff or County Court in as expedient a fashion as reasonably possible.

Any non-English speaking inmates will be provided interpretation services. Costs for this service, as required, are included in the daily rate.

The Client shall, whenever indicated, initiate court-ordered treatment proceedings under A.R.S. Title 36, Chapter 5 prior to transfer of an inmate. If court-ordered treatment proceedings become necessary or desirable at any time during the inmate's stay at the Provider's RTC program, or otherwise upon the request of Provider's RTC program, the Client will initiate such proceedings in the Client's county and shall be responsible for the costs of evaluation and court proceedings associated with such proceedings, as well as provision of mental health treatment services occurring as a result of court-ordered treatment. Client shall ensure that Provider's RTC physicians are listed in any treatment plan and that a copy of the treatment plan is delivered to Provider's RTC Program Director.

Client shall be separately responsible for paying any offsite health services for Client inmates housed at the Provider's AJF. Offsite health services include hospital inpatient or outpatient treatment or surgeries, specialty physician consults, or diagnostic services that Provider's AJF does not provide onsite for its inmates. Client shall also be responsible for paying any expenses related to exceptional medical care including, but not limited to, "non-formulary medications" as defined by the Provider's health care vendor contract.

Upon notification that a Client's inmate is to receive or has received offsite health services, Provider shall so notify offsite health providers and Client and confirm that such services are the financial responsibility of Client. If Client inmate must be transported offsite to receive health services in an inpatient setting, Provider shall provide transport and security for the inmate for a maximum of one shift to allow Client to make arrangements to either transport the inmate back to a provider in Client's county or to send officers to relieve Provider's officers at local inpatient facility.

Transportation of inmates to any Court or any other location, as ordered by the Superior Court in and for Client's county or done at the request of the Client shall be Client's responsibility.

Client shall specify a single point of contact for Client for all inquiries. Provider shall specify a single point of contact for RTC program service coordination and an additional single point of contact for billing and finance inquiries.

3. **Financing**. For each inmate admitted to the RTC Program Client will pay Provider $350.00 for the initial day and $250.00 per day thereafter for inmate housing, routine onsite healthcare services and costs of restoration services. Client shall be billed separately for exceptional onsite healthcare services including Non-Formulary Medications as defined in Provider's healthcare vendor contract. The billing day as defined herein applies to each Client inmate who is an inmate in, or under control of the Provider's AJF. Neither the acceptance of the inmate into the program nor the acceptance of per diem payments is a guarantee of restoration to competency for any specific inmate. The RTC per diem rate shall remain in effect until June 30, 2015, at which time the Parties shall have agreed to a new RTC per diem rate pursuant to this IGA. Client must pay community providers directly for all health services provided outside the Provider's AJF.

Client shall reimburse Provider at the hourly rate of $30.00 per corrections officer hour and $.55 per mile for van transport for transporting a Client inmate outside the Provider's AJF. A minimum of 2 corrections officers will accompany the Client inmate per Provider policy. In the event a Provider County corrections officer or Sheriff's Deputy must post an officer at an offsite health service location Client shall reimburse Provider at the hourly rate of $30.00 per corrections officer hour.

In the event that Provider's RTC staff is required by the Superior Court in and for Client's County to make a physical court appearance, Client shall reimburse Provider at the daily rate of $900.00 for per diem, time and travel costs for the Provider's RTC Staff . Should Provider RTC staff be required to remain in Client's county overnight,

Client will reimburse actual lodging expenses plus an additional $750.00 per day.

In the event Provider RTC staff is required by the Superior Court in and for Client's county to appear in court via video, Client shall reimburse Provider at the hourly rate of $85.00. Client county is responsible for procuring the tele-video equipment that is compatible with that utilized by Provider's RTC program and for any costs required for operation of the tele-video equipment.

In the event legal counsel is required on behalf of the Provider RTC program or staff related to provision of service to Client inmates, Client shall reimburse Provider 100% of billed charges for the Provider's RTC contracted legal service.

Criteria and Rules Governing Billing:

> For purposes of this IGA a "billable day" is that period commencing at 0000 hours and ending at 2359 hours that same day, or any fractional part thereof, of any day the Client inmate is in the custody or control of Provider's AJF.

Criteria for Assessment of Billing:

> The costs of housing a Client inmate shall commence on the day the inmate was booked into the Provider's AJF. Provider shall cease charging the RTC per diem under the guidelines established earlier in this IGA under the definition of "billable day."
>
> In the event a Client inmate escapes, billing charges will cease to accrue after 2359 hours of the day of escape. Billing charges will begin again on the day that the inmate is recaptured and is actually being held in the Provider's AJF.

At the end of each month after a Client inmate is admitted into the RTC Program, Provider will submit to Client a statement of charges. This statement shall provide the following information: name of inmate, booking date and hour, release date and hour, indication of booking day billing or subsequent day billing, billing period, daily rates, total billing days, and the total bill. Client shall be allowed access to necessary computer systems in a timely manner as necessary to verify the billing.

Client shall notify Provider in writing of any contested charges within 30 days following receipt of a monthly billing. If Client notifies Provider of a dispute within 30 days of receipt of the monthly billing, Client may withhold payment on each inmate for whom billing is disputed until the dispute has been resolved. It is understood and agreed that the billed charges are deemed accepted and will be paid if no dispute notice is received by Provider within 30 days after the receipt on the monthly billing. Disputes about the billing statement shall be jointly reviewed by both parties and satisfactorily resolved within 45 days of the monthly billing. Excluding contested charges all charges shall be paid within sixty days of receipt of a monthly billing. Contested charges shall be paid within 30 days of resolution of the dispute. A mutually

acceptable third party may arbitrate charges remaining unresolved after the 60-day period.

Client shall pay interest on outstanding charges beginning on the 10th day after resolution of the billing at a rate of 10% per annum until paid. Upon paying a previously disputed charge, Client will attach a statement detailing the specific charges that are being paid. Client will attach statement to each check submitted to County indicating the dates for which the check is to be applied.

4. **Term**. The initial term of this IGA shall be effective as of July 1, 2014 and shall continue in effect until June 30 2015. Thereafter it may be renewed annually beginning on July 1 for up to three renewal terms by mutual agreement of the Parties.

5. **Disposal of Property**. Upon the termination of this IGA, all property involved shall revert back to its owner. Termination shall not relieve any party from liabilities or costs already incurred under this IGA, nor affect any ownership of property pursuant to this IGA.

6. **Indemnification.** Each party (as Indemnitor) agrees to indemnify, defend and hold harmless the other party (as Indemnitee) from and against any and all claims, losses, liability, costs or expenses (including reasonable attorney's fees) (hereinafter collectively referred to as "claims") arising out of bodily injury of any person (including death) or property damage, but only to the extent that such claims which result in vicarious/derivative liability to the Indemnitee, are caused by the act, omission, negligence, misconduct, or other fault of the Indemnitor, its officers, officials, employees, or volunteers. Client acknowledges that health care services at the Provider's AJF are provided by independent contractors.

7. **Insurance.** Each party shall obtain and maintain at its own expense, during the entire term of this Contract the following type(s) and amounts of insurance:

   a) Commercial General Liability in the amount of $1,000,000.00 combined single limit Bodily Injury and Property Damage.

   b) Commercial or Business automobile liability coverage for owned, non-owned and hired vehicles used in the performance of this Contract with limits in the amount of $1,000,000.00 combined single limit or $1,000,000.00 Bodily Injury, $1,000,000.00 Property Damage.

   c) If this Contract involves professional services, professional liability insurance in the amount of $1,000,000.00.

   d) If required by law, workers' compensation coverage including employees' liability coverage.

Parties to this agreement shall provide thirty (30) days written notice to all parties to this IGA of cancellation, non-renewal or material change of coverage.

The above requirement may be alternatively met through self insurance pursuant to A.R.S. §§ 11-261 and 11-981 or participation in an insurance risk pool under A.R.S. § 11.952.01 at no less than the minimal coverage levels set forth in this article. Parties to this agreement shall provide thirty (30) days written notice to all other parties of cancellation, non-renewal or material change of coverage.

8. **Compliance with Laws**. The parties shall comply with all federal, state and local laws, rules, regulations, standards and Executive Orders, without limitation to those designated within this IGA. The laws and regulations of the State of Arizona shall govern the rights of the parties, the performance of this IGA and any disputes hereunder. Any action relating to this IGA shall be brought in an Arizona court in Provider County.

9. **Non-Discrimination**. The parties shall not discriminate against any Provider or Client employee, client or any other individual in any way because of that person's age, race, creed, color, religion, sex, disability or national origin in the course of carrying out their duties pursuant to this IGA. The parties shall comply with the provisions of Executive Order 75-5, as amended by Executive Order 99-4, which is incorporated into this IGA by reference, as if set forth in full herein.

10. **ADA**. The parties shall comply with all applicable provisions of the Americans with Disabilities Act (Public Law 101-336, 42 U.S.C. 12101-12213) and all applicable federal regulations under the Act, including 28 CFR Parts 35 and 36.

11. **Severability**. If any provision of this IGA or any application thereof to the parties or any person or circumstances, is held invalid, such invalidity shall not affect other provisions or applications of this IGA which can be given effect, without the invalid provision or application and to this end the provisions of this IGA are declared to be severable.

12. **Conflict of Interest**. This contract is subject to cancellation for conflict of interest pursuant to A.R.S. § 38-511, the pertinent provisions of which are incorporated herein by reference.

13. **Non-Appropriation.** Not withstanding any other provision in this IGA, this IGA may be terminated if for any reason the Provider's or Client's Board of Supervisors does not appropriate sufficient monies for the purpose of maintaining this IGA. In the event of such cancellation, the parties shall have no further obligation to each other except for payment for services rendered prior to cancellation.

14. **Legal Authority.** Neither party warrants to the other its legal authority to enter into this IGA. If a court, at the request of a third person, should declare that either party lacks authority to enter into this IGA, or any part of it, then the IGA, or parts of it affected by such order, shall be null and void, and no recovery may be had by either party against the other for lack of performance or otherwise.

15. **Worker's Compensation.** Each party shall comply with the notice of A.R.S. § 23-1022 (E). For purposes of A.R.S. § 23-1022, irrespective of the operations protocol in

place, each party is solely responsible for the payment of Worker's Compensation benefits for its employees.

16. **No Joint Obligations**. Neither party shall be liable for any debts, accounts, obligations or other liabilities whatsoever of the other, including (without limitation) the other party's obligation to withhold Social Security and income taxes for itself or any of its employees.

17. **No Third Party Beneficiaries**. Nothing in the provisions of this IGA is intended to create duties or obligations to or rights in third parties not parties to this IGA or affect the legal liability of either party to the IGA by imposing any standard of care with respect to the maintenance of public facilities different from the standard of care imposed by law.

18. **Notice**. Any notice required or permitted to be given under this IGA shall be in writing and shall be served by delivery or by certified mail upon the other party as follows (or at such other address as may be identified by a party in writing to the other party) :

Provider:

Yavapai County RTC
2830 N. Commonwealth Dr., Ste 105
Camp Verde, AZ 86322

Client:

Gila County
Attn. Don McDaniel, Jr.
1400 E. Ash Street
Globe, AZ 85501

With copies to:

County Administrator/Clerk of the Board
1015 Fair Street
Prescott, AZ 86305

Gila County Clerk of the Board
1400 E. Ash Street
Globe, AZ 85501

19. **Entire Agreement**. This document constitutes the entire Agreement between the parties pertaining to the subject matter hereof, and all prior or contemporaneous agreements and understandings, oral or written, are hereby superseded and merged herein. This IGA shall not be modified, amended, altered or extended except through a written amendment signed by both Parties.

///

///

///

///

///

///

APPROVALS

PROVIDER:

Date 6/2, 2014

Chairman
Board of Supervisors

ATTEST:

Clerk of the Board

CLIENT:

Date June 24, 2014

Michael A. Pastor, Chairman Board of Supervisors

ATTEST:

Marian Sheppard, Clerk of the Board

Determinations of Counsel

The foregoing Intergovernmental Agreement between Provider and Client has been reviewed pursuant to A.R.S. § 11-952 by the undersigned, who have determined that it is in proper form and is within the powers and authority granted under the laws of the State of Arizona to those parties to the Intergovernmental Agreement represented by the undersigned.

PROVIDER:

Deputy County Attorney

CLIENT

Bryan B. Chambers, Deputy Attorney Principal

Intergovernmental Agreement
between
Yavapai County and Gila County
for
Restoration to Competency Services

This Intergovernmental Agreement (IGA) is entered into by and between Yavapai County, ("Provider") and Gila County ("Client"), bodies politic and corporate of the State of Arizona, pursuant to A.R.S. § 11-952.

Recitals

A. The Parties may contract for services and enter into agreements with one another for joint or cooperative action pursuant to A.R.S. § 11-951, et seq.

B. The Parties desire to enter into an agreement for the provision of restoration to competency services for Client pre-trial inmates.

C. The Parties acknowledge that the Client's inmates will remain under the jurisdiction of Client during the period for which services are being provided by Provider pursuant to this Agreement and that Client will assign a defense attorney and prosecutor to the Client's case during the entirety of the service period.

NOW, THEREFORE, The Parties, pursuant to the above, and in consideration of the matters and things hereinafter set forth, do mutually agree as follows:

Agreement

1. **Purpose.** The purpose of this IGA is to set forth the terms and conditions for admission of Client's pre-trial inmates into Provider's Restoration to Competency Program ("RTC Program") and provision of restoration services to Client inmates in the Provider's Adult Jail Facilities (AJF) .

2. **Scope.** Provider will receive and detain Client's pre-trial inmates after the inmate has been determined by the Superior Court in and for the Client's county through the Rule 11 process as not competent to stand trial and who are medically and administratively fit to be incarcerated by Provider, for the purpose of admitting the inmates into and providing the restoration services of the Provider's RTC Program.

   Client shall e-mail SheriffDetentionRTC@Co.Yavapai.AZ.US to inform the RTC team of Client's need for placement in Provider's program. A member of the RTC team will promptly reply to sender with a letter indicating what information is needed in order to determine acceptance into the program. If the program has no available bed space upon receipt of the initial e-mail from Client, the Client will be advised immediately and will be given an estimated date of bed space availability. The information requested will constitute the "Request Package."

   Provider will determine whether to accept the inmate within 3 business days after receiving the complete Request Package. Provider reserves the right to refuse to accept

a Client's inmate or return an accepted inmate for any reason. If the inmate is accepted, Client shall deliver the inmate to the Provider's AJF Facility at a time specified by Provider. Provider will house the Client's inmate based upon classification criteria established by the Provider's AJF and will provide for the onsite care, supervision, feeding and medical care, behavioral health and dental care of Client's inmates except as otherwise provided in this IGA. A court order from Client County is required for admission to the Provider's RTC Program (A.R.S. § 13-4510). The Court order committing an inmate into the Provider's RTC program must include authorization to administer medications involuntarily. The Provider's RTC program will begin the intake process after receiving the inmate and all necessary paperwork.

The Provider's RTC staff shall provide Client's Court with status reports on the inmate's progress every sixty (60) days from date the inmate was admitted into the Provider's RTC program. Date of admission shall be the date that all of the following actions are complete: acceptance by the Provider's RTC program, receipt by the Provider's RTC staff of the completed court order and other Rule 11 paperwork , and physical transfer of the inmate to the Provider's AJF.

It is the intention of the Parties that the inmate will remain at the Provider's AJF until a recommendation regarding competency is completed unless one of the following occurs:

1. If, at any time during the process of restoration it is determined that the inmate requires an intensive inpatient restoration setting in which case the Provider's RTC staff shall so notify the Client to allow the Client to seek issuance of an order by the Superior Court in and for the Client's county for transfer of the inmate to Arizona State Hospital (ASH) if applicable.

2. The Client directs that the Client's inmate be transferred to its custody pursuant to limitations imposed law with respect to competency or charges.

3. The Provider otherwise determines that the inmate is no longer appropriate for housing at the Provider's AJF. Client and Provider agree to exchange such documentation as is required by RTC staff or County Court in as expedient a fashion as reasonably possible.

Any non-English speaking inmates will be provided interpretation services. Costs for this service, as required, are included in the daily rate.

The Client shall, whenever indicated, initiate court-ordered treatment proceedings under A.R.S. Title 36, Chapter 5 prior to transfer of an inmate. If court-ordered treatment proceedings become necessary or desirable at any time during the inmate's stay at the Provider's RTC program, or otherwise upon the request of Provider's RTC program, the Client will initiate such proceedings in the Client's county and shall be responsible for the costs of evaluation and court proceedings associated with such proceedings, as well as provision of mental health treatment services occurring as a result of court-ordered treatment. Client shall ensure that Provider's RTC physicians are listed in any treatment plan and that a copy of the treatment plan is delivered to Provider's RTC Program Director.

Client shall be separately responsible for paying any offsite health services for Client inmates housed at the Provider's AJF. Offsite health services include hospital inpatient or outpatient treatment or surgeries, specialty physician consults, or diagnostic services that Provider's AJF does not provide onsite for its inmates. Client shall also be responsible for paying any expenses related to exceptional medical care including, but not limited to, "non-formulary medications" as defined by the Provider's health care vendor contract.

Upon notification that a Client's inmate is to receive or has received offsite health services, Provider shall so notify offsite health providers and Client and confirm that such services are the financial responsibility of Client. If Client inmate must be transported offsite to receive health services in an inpatient setting, Provider shall provide transport and security for the inmate for a maximum of one shift to allow Client to make arrangements to either transport the inmate back to a provider in Client's county or to send officers to relieve Provider's officers at local inpatient facility.

Transportation of inmates to any Court or any other location, as ordered by the Superior Court in and for Client's county or done at the request of the Client shall be Client's responsibility.

Client shall specify a single point of contact for Client for all inquiries. Provider shall specify a single point of contact for RTC program service coordination and an additional single point of contact for billing and finance inquiries.

3. **Financing**. For each inmate admitted to the RTC Program Client will pay Provider $350.00 for the initial day and $250.00 per day thereafter for inmate housing, routine onsite healthcare services and costs of restoration services. Client shall be billed separately for exceptional onsite healthcare services including Non-Formulary Medications as defined in Provider's healthcare vendor contract. The billing day as defined herein applies to each Client inmate who is an inmate in, or under control of the Provider's AJF. Neither the acceptance of the inmate into the program nor the acceptance of per diem payments is a guarantee of restoration to competency for any specific inmate. The RTC per diem rate shall remain in effect until June 30, 2011, at which time the Parties shall have agreed to a new RTC per diem rate pursuant to this IGA. Client must pay community providers directly for all health services provided outside the Provider's AJF.

Client shall reimburse Provider at the hourly rate of $30.00 per corrections officer hour and $.55 per mile for van transport for transporting a Client inmate outside the Provider's AJF. A minimum of 2 corrections officers will accompany the Client inmate per Provider policy. In the event a Provider County corrections officer or Sheriff's Deputy must post an officer at an offsite health service location Client shall reimburse Provider at the hourly rate of $30.00 per corrections officer hour.

In the event that Provider's RTC staff is required by the Superior Court in and for Client's County to make a physical court appearance, Client shall reimburse Provider at the daily rate of $900.00 for per diem, time and travel costs for the Provider's RTC Staff . Should Provider RTC staff be required to remain in Client's county overnight,

Client will reimburse actual lodging expenses plus an additional $750.00 per day.

In the event Provider RTC staff is required by the Superior Court in and for Client's county to appear in court via video, Client shall reimburse Provider at the hourly rate of $85.00. Client county is responsible for procuring the tele-video equipment that is compatible with that utilized by Provider's RTC program and for any costs required for operation of the tele-video equipment.

In the event legal counsel is required on behalf of the Provider RTC program or staff related to provision of service to Client inmates, Client shall reimburse Provider 100% of billed charges for the Provider's RTC contracted legal service.

Criteria and Rules Governing Billing:

For purposes of this IGA a "billable day" is that period commencing at 0000 hours and ending at 2359 hours that same day, or any fractional part thereof, of any day the Client inmate is in the custody or control of Provider's AJF.

Criteria for Assessment of Billing:

The costs of housing a Client inmate shall commence on the day the inmate was booked into the Provider's AJF. Provider shall cease charging the RTC per diem under the guidelines established earlier in this IGA under the definition of "billable day."

In the event a Client inmate escapes, billing charges will cease to accrue after 2359 hours of the day of escape. Billing charges will begin again on the day that the inmate is recaptured and is actually being held in the Provider's AJF.

At the end of each month after a Client inmate is admitted into the RTC Program, Provider will submit to Client a statement of charges. This statement shall provide the following information: name of inmate, booking date and hour, release date and hour, indication of booking day billing or subsequent day billing, billing period, daily rates, total billing days, and the total bill. Client shall be allowed access to necessary computer systems in a timely manner as necessary to verify the billing.

Client shall notify Provider in writing of any contested charges within 30 days following receipt of a monthly billing. If Client notifies Provider of a dispute within 30 days of receipt of the monthly billing, Client may withhold payment on each inmate for whom billing is disputed until the dispute has been resolved. It is understood and agreed that the billed charges are deemed accepted and will be paid if no dispute notice is received by Provider within 30 days after the receipt on the monthly billing. Disputes about the billing statement shall be jointly reviewed by both parties and satisfactorily resolved within 45 days of the monthly billing. Excluding contested charges all charges shall be paid within sixty days of receipt of a monthly billing. Contested charges shall be paid within 30 days of resolution of the dispute. A mutually

acceptable third party may arbitrate charges remaining unresolved after the 60-day period.

Client shall pay interest on outstanding charges beginning on the 10th day after resolution of the billing at a rate of 10% per annum until paid. Upon paying a previously disputed charge, Client will attach a statement detailing the specific charges that are being paid. Client will attach statement to each check submitted to County indicating the dates for which the check is to be applied.

4. **Term.** The initial term of this IGA shall be effective as of July 1, 2015 and shall continue in effect until June 30 2018. Thereafter it may be renewed annually beginning on July 1 for up to three renewal terms by mutual agreement of the Parties.

5. **Disposal of Property.** Upon the termination of this IGA, all property involved shall revert back to its owner. Termination shall not relieve any party from liabilities or costs already incurred under this IGA, nor affect any ownership of property pursuant to this IGA.

6. **Indemnification.** Each party (as Indemnitor) agrees to indemnify, defend and hold harmless the other party (as Indemnitee) from and against any and all claims, losses, liability, costs or expenses (including reasonable attorney's fees) (hereinafter collectively referred to as "claims") arising out of bodily injury of any person (including death) or property damage, but only to the extent that such claims which result in vicarious/derivative liability to the Indemnitee, are caused by the act, omission, negligence, misconduct, or other fault of the Indemnitor, its officers, officials, employees, or volunteers. Client acknowledges that health care services at the Provider's AJF are provided by independent contractors.

7. **Insurance.** Each party shall obtain and maintain at its own expense, during the entire term of this Contract the following type(s) and amounts of insurance:

   a) Commercial General Liability in the amount of $1,000,000.00 combined single limit Bodily Injury and Property Damage.

   b) Commercial or Business automobile liability coverage for owned, non-owned and hired vehicles used in the performance of this Contract with limits in the amount of $1,000,000.00 combined single limit or $1,000,000.00 Bodily Injury, $1,000,000.00 Property Damage.

   c) If this Contract involves professional services, professional liability insurance in the amount of $1,000,000.00.

   d) If required by law, workers' compensation coverage including employees' liability coverage.

   Parties to this agreement shall provide thirty (30) days written notice to all parties to this IGA of cancellation, non-renewal or material change of coverage.

The above requirement may be alternatively met through self insurance pursuant to A.R.S. §§ 11-261 and 11-981 or participation in an insurance risk pool under A.R.S. § 11.952.01 at no less than the minimal coverage levels set forth in this article. Parties to this agreement shall provide thirty (30) days written notice to all other parties of cancellation, non-renewal or material change of coverage.

8. **Compliance with Laws.** The parties shall comply with all federal, state and local laws, rules, regulations, standards and Executive Orders, without limitation to those designated within this IGA. The laws and regulations of the State of Arizona shall govern the rights of the parties, the performance of this IGA and any disputes hereunder. Any action relating to this IGA shall be brought in an Arizona court in Provider County.

9. **Non-Discrimination.** The parties shall not discriminate against any Provider or Client employee, client or any other individual in any way because of that person's age, race, creed, color, religion, sex, disability or national origin in the course of carrying out their duties pursuant to this IGA. The parties shall comply with the provisions of Executive Order 75-5, as amended by Executive Order 99-4, which is incorporated into this IGA by reference, as if set forth in full herein.

10. **ADA.** The parties shall comply with all applicable provisions of the Americans with Disabilities Act (Public Law 101-336, 42 U.S.C. 12101-12213) and all applicable federal regulations under the Act, including 28 CFR Parts 35 and 36.

11. **Severability.** If any provision of this IGA or any application thereof to the parties or any person or circumstances, is held invalid, such invalidity shall not affect other provisions or applications of this IGA which can be given effect, without the invalid provision or application and to this end the provisions of this IGA are declared to be severable.

12. **Conflict of Interest.** This contract is subject to cancellation for conflict of interest pursuant to A.R.S. § 38-511, the pertinent provisions of which are incorporated herein by reference.

13. **Non-Appropriation.** Not withstanding any other provision in this IGA, this IGA may be terminated if for any reason the Provider's or Client's Board of Supervisors does not appropriate sufficient monies for the purpose of maintaining this IGA. In the event of such cancellation, the parties shall have no further obligation to each other except for payment for services rendered prior to cancellation.

14. **Legal Authority.** Neither party warrants to the other its legal authority to enter into this IGA. If a court, at the request of a third person, should declare that either party lacks authority to enter into this IGA, or any part of it, then the IGA, or parts of it affected by such order, shall be null and void, and no recovery may be had by either party against the other for lack of performance or otherwise.

15. **Worker's Compensation.** Each party shall comply with the notice of A.R.S. § 23-1022 (E). For purposes of A.R.S. § 23-1022, irrespective of the operations protocol in

place, each party is solely responsible for the payment of Worker's Compensation benefits for its employees.

16. **No Joint Obligations**. Neither party shall be liable for any debts, accounts, obligations or other liabilities whatsoever of the other, including (without limitation) the other party's obligation to withhold Social Security and income taxes for itself or any of its employees.

17. **No Third Party Beneficiaries**. Nothing in the provisions of this IGA is intended to create duties or obligations to or rights in third parties not parties to this IGA or affect the legal liability of either party to the IGA by imposing any standard of care with respect to the maintenance of public facilities different from the standard of care imposed by law.

18. **Notice**. Any notice required or permitted to be given under this IGA shall be in writing and shall be served by delivery or by certified mail upon the other party as follows (or at such other address as may be identified by a party in writing to the other party) :

Provider:

Yavapai County RTC
2830 N. Commonwealth Dr., Ste 105
Camp Verde, AZ 86322

Client:

Gila County
Gila County Finance
Guerrero Building
1400 E. Ash Street
Globe, AZ 85501

With copies to:

County Administrator/Clerk of the Board
1015 Fair Street

Prescott, AZ 86305

19. **Entire Agreement**. This document constitutes the entire Agreement between the parties pertaining to the subject matter hereof, and all prior or contemporaneous agreements and understandings, oral or written, are hereby superseded and merged herein. This IGA shall not be modified, amended, altered or extended except through a written amendment signed by both Parties.

///

///

///

///

///

///

APPROVALS

PROVIDER:

Date August 5, 20 15

Chairman Craig L. Brown
Board of Supervisors

ATTEST:

Clerk of the Board

CLIENT:

Date July 28, 20 15

Chairman
Board of Supervisors

ATTEST:

Laurie Kline, Deputy
Clerk of the Board

Determinations of Counsel

The foregoing Intergovernmental Agreement between Provider and Client has been reviewed pursuant to A.R.S. § 11-952 by the undersigned, who have determined that it is in proper form and is within the powers and authority granted under the laws of the State of Arizona to those parties to the Intergovernmental Agreement represented by the undersigned.

PROVIDER:

Deputy County Attorney

CLIENT

Bryan B. Chambers,
Deputy County Attorney/Civil Bureau Chief
for Bradley D. Beauchamp, County Attorney

Extension of Intergovernmental Agreement

Restoration to Competency Services

WHEREAS, Yavapai County (the "PROVIDER") and Gila County (the "CLIENT"), have previously entered into an Intergovernmental Agreement (the "IGA"); whereby Yavapai County has agreed to provide Restoration to Competency Services to Gila County and

WHEREAS, the IGA provides that following the expiration of its initial term the IGA may be renewed for up to three additional renewal terms by mutual agreement of the parties; and

WHEREAS, the Parties wish to extend the IGA for an additional one-year term.

NOW THEREFORE, THE PARTIES AGREE AS FOLLOWS

The Agreement between the Parties for Restoration to Competency Services is hereby extended for an additional one-year term commencing on July 1, 2013 and terminating on June 30, 2014 subject to the same terms and conditions as set forth in said Agreement.

YAVAPAI COUNTY:

Chairman, Board of Supervisors — Date: 5/20/13

ATTEST:

Clerk of the Board

GILA COUNTY:

Chairman, Board of Supervisors — Date: 6-25-2013

ATTEST:

Clerk of the Board

Determinations of Counsel

The foregoing Intergovernmental Agreement provisions have been reviewed pursuant to A.R.S § 11-952 by the undersigned who have determined that they are in the proper form and are within the powers and authority granted under the laws of the State of Arizona to the Parties represented by the undersigned.

Counsel for Provider

Deputy County Attorney

Date: 5/29/13

Counsel for Client

Deputy County Attorney

Date: 6-25-2013

INTERGOVERNMENTAL AGREEMENT EXTENSION
BETWEEN
GILA COUNTY
AND
YAVAPAI COUNTY

RESTORATION TO COMPETENCY SERVICES

WHEREAS, on approximately October 4, 2010, Yavapai County "Provider", and Gila County "Client", entered into an Intergovernmental Agreement (IGA) whereby Yavapai County agreed to provide Restoration to Competency Services to Gila County; and

WHEREAS, under the terms of the IGA the agreement expires on June 30, 2011; and

WHEREAS, under the terms of the IGA the agreement may be renewed annually for up to three additional one year terms; and

WHEREAS, under the terms of the IGA, on approximately July 5, 2011, the agreement was extended to June 30, 2012; and

WHEREAS, both Yavapai County and Gila County agree to extend the IGA for Restoration to Competency Services for an additional one year term;

NOW, THEREFORE, The Parties, Pursuant to the above, hereby agree that the IGA between them for Restoration to Competency Services has hereby extended from July 1, 2012, for an additional year term, to expire on June 30, 2013, under the same terms and conditions as set forth in the original agreement between the parties.

YAVAPAI COUNTY:

Chairman, Board of Supervisors

Date: May 21, 2012

ATTEST:

Clerk of the Board

GILA COUNTY:

Chairman, Board of Supervisors

Date: June 26, 2012

ATTEST:

Marian Sheppard, Chief Deputy

Clerk of the Board

Determination of Counsel

The foregoing Intergovernmental Agreement between Yavapai County and Gila County has been reviewed pursuant to A.R.S. § 11-952 by the undersigned, who have determined that it is in proper form and is within the powers and authority granted under the laws of the State of Arizona to those parties to the Intergovernmental Agreement represented by the undersigned.

PROVIDER

Deputy County Attorney

CLIENT

Chief Deputy County Attorney

Extension of Intergovernmental Agreement
between
Yavapai County and Gila County
for
Restoration to Competency Services

WHEREAS on approximately October 4, 2010 Yavapai County ('Provider") and Gila County ("Client") have entered into an Intergovernmental Agreement (IGA) where Yavapai County will provide Restoration to Competency Services to Gila County, and

WHEREAS, under the terms of the IGA it will expire on June 30, 2011, and

WHEREAS under the terms of said IGA the parties may agree to extend the IGA for an additional term of 1 year, and

WHEREAS, both Yavapai County and Gila County agree to extend the IGA for Restoration to Competency services for an additional year,

NOW, THEREFORE, The Parties, pursuant to the above, hereby agree that the IGA between them for Restoration to Competency Services his hereby extended from July 1, 2011 for an additional year, to expire on June 30, 2012, under the same terms and conditions as set forth in the original IGA between the parties.

PROVIDER:

Date 7/5, 20 11

Chairman
Board of Supervisors

ATTEST:

Clerk of the Board

CLIENT:

Date 7/5/11, 20 11

Chairman
Board of Supervisors

ATTEST:

Clerk of the Board

Determinations of Counsel

The foregoing Intergovernmental Agreement between Provider and Client has been reviewed pursuant to A.R.S. § 11-952 by the undersigned, who have determined that it is in proper form and is within the powers and authority granted under the laws of the State of Arizona to those parties to the Intergovernmental Agreement represented by the undersigned.

PROVIDER:

Deputy County Attorney

CLIENT

Deputy County Attorney

Page: 1 of 9
01/11/2011 08:25:44 AM Receipt #: 11-0208
Rec Fee: $0 Gila County Board Of Supervisors
Gila County, Az, Sadie Tomerlin Dalton, Recorder

When recorded deliver to:

Marian Sheppard, Chief Deputy Clerk
Gila County Board of Supervisors
(09/07/10 #3D)

CAPTION HEADING:

Intergovernmental Agreement
Between
Gila County
and
Yavapai County
(For Restoration to Competency Services)

DO NOT REMOVE

This is part of the official document

THIS IS A CONFORMED COPY OF INSTRUMENT
RECORDED ON DATE 10-7-10 TIME 10:13
IN BOOK 4769 PAGE 305
ANA WAYMAN-TRUJILLO, RECORDER
DEPUTY

INTERGOVERNMENTAL AGREEMENT BETWEEN YAVAPAI COUNTY AND GILA COUNTY FOR RESTORATION TO COMPETENCY SERVICES

This Intergovernmental Agreement (IGA) is entered into by and between Yavapai County, ("Provider") and Gila County ("Client"), bodies politic and corporate of the State of Arizona, pursuant to A.R.S. § 11-952.

RECITALS:

A. The Parties may contract for services and enter into agreements with one another for joint or cooperative action pursuant to A.R.S. § 11-951, et seq.

B. The Parties desire to enter into an agreement for the provision of restoration to competency services for Client pre-trial inmates.

C. The Parties acknowledge that the Client's inmates will remain under the jurisdiction of Client during the period for which services are being provided by Provider pursuant to this Agreement and that Client will assign a defense attorney and prosecutor to the Client's case during the entirety of the service period.

NOW, THEREFORE, The Parties, pursuant to the above, and in consideration of the matters and things hereinafter set forth, do mutually agree as follows:

AGREEMENT:

A. **Purpose.** The purpose of this IGA is to set forth the terms and conditions for admission of Client's pre-trial inmates into Provider's Restoration to Competency Program ("RTC Program") and provision of restoration services to Client inmates in the Provider's Adult Jail Facilities (AJF) .

B. **Scope**. Provider will receive and detain Client's pre-trial inmates after the inmate has been determined by the Superior Court in and for the Client's county through the Rule 11 process as not competent to stand trial and who are medically and administratively fit to be incarcerated by Provider, for the purpose of admitting the inmates into and providing the restoration services of the Provider's RTC Program.

Client shall e-mail SheriffDetentionRTC@Co.Yavapai.AZ.US to inform the RTC team of Client's need for placement in Provider's program. A member of the RTC team will promptly reply to sender with a letter indicating what information is needed in order to determine acceptance into the program. If the program has no available bed space upon receipt of the initial e-mail from Client, the Client will be advised immediately and will

2011-000392 AG Page: 2 of 9
01/11/2011 08:25:44 AM Receipt #: 11-0208
Rec Fee: $0 Gila County Board Of Supervisors
Gila County, Az, Sadie Tomerlin Dalton, Recorder

be given an estimated date of bed space availability. The information requested will constitute the "Request Package."

Provider will determine whether to accept the inmate within 3 business days after receiving the complete Request Package. Provider reserves the right to refuse to accept a Client's inmate or return an accepted inmate for any reason. If the inmate is accepted, Client shall deliver the inmate to the Provider's AJF Facility at a time specified by Provider. Provider will house the Client's inmate based upon classification criteria established by the Provider's AJF and will provide for the onsite care, supervision, feeding and medical care, behavioral health and dental care of Client's inmates except as otherwise provided in this IGA. A court order from Client County is required for admission to the Provider's RTC Program (A.R.S. § 13-4510). The Court order committing an inmate into the Provider's RTC program must include authorization to administer medications involuntarily. The Provider's RTC program will begin the intake process after receiving the inmate and all necessary paperwork.

The Provider's RTC staff shall provide Client's Court with status reports on the inmate's progress every sixty (60) days from date the inmate was admitted into the Provider's RTC program. Date of admission shall be the date that all of the following actions are complete: acceptance by the Provider's RTC program, receipt by the Provider's RTC staff of the completed court order and other Rule 11 paperwork , and physical transfer of the inmate to the Provider's AJF.

It is the intention of the Parties that the inmate will remain at the Provider's AJF until a recommendation regarding competency is completed unless one of the following occurs:

1. If, at any time during the process of restoration it is determined that the inmate requires an intensive inpatient restoration setting in which case the Provider's RTC staff shall so notify the Client to allow the Client to seek issuance of an order by the Superior Court in and for the Client's county for transfer of the inmate to Arizona State Hospital (ASH) if applicable.

2. The Client directs that the Client's inmate be transferred to its custody pursuant to limitations imposed law with respect to competency or charges.

3. The Provider otherwise determines that the inmate is no longer appropriate for housing at the Provider's AJF. Client and Provider agree to exchange such documentation as is required by RTC staff or County Court in as expedient a fashion as reasonably possible.

Any non-English speaking inmates will be provided interpretation services. Costs for this service, as required, are included in the daily rate.

The Client shall, whenever indicated, initiate court-ordered treatment proceedings under A.R.S. Title 36, Chapter 5 prior to transfer of an inmate. If court-ordered treatment

01/11/2011 08:25:44 AM Receipt #: 11-0208
Rec Fee: $0 Gila County Board Of Supervisors
Gila County, Az, Sadie Tomerlin Dalton, Recorder

proceedings become necessary or desirable at any time during the inmate's stay at the Provider's RTC program, or otherwise upon the request of Provider's RTC program, the Client will initiate such proceedings in the Client's county and shall be responsible for the costs of evaluation and court proceedings associated with such proceedings, as well as provision of mental health treatment services occurring as a result of court-ordered treatment. Client shall ensure that Provider's RTC physicians are listed in any treatment plan and that a copy of the treatment plan is delivered to Provider's RTC Program Director.

Client shall be separately responsible for paying any offsite health services for Client inmates housed at the Provider's AJF. Offsite health services include hospital inpatient or outpatient treatment or surgeries, specialty physician consults, or diagnostic services that Provider's AJF does not provide onsite for its inmates. Client shall also be responsible for paying any expenses related to exceptional medical care including, but not limited to, "non-formulary medications" as defined by the Provider's health care vendor contract.

Upon notification that a Client's inmate is to receive or has received offsite health services, Provider shall so notify offsite health providers and Client and confirm that such services are the financial responsibility of Client. If Client inmate must be transported offsite to receive health services in an inpatient setting, Provider shall provide transport and security for the inmate for a maximum of one shift to allow Client to make arrangements to either transport the inmate back to a provider in Client's county or to send officers to relieve Provider's officers at local inpatient facility.

Transportation of inmates to any Court or any other location, as ordered by the Superior Court in and for Client's county or done at the request of the Client shall be Client's responsibility.

Client shall specify a single point of contact for Client for all inquiries. Provider shall specify a single point of contact for RTC program service coordination and an additional single point of contact for billing and finance inquiries.

C. **Financing.** For each inmate admitted to the RTC Program Client will pay Provider $350.00 for the initial day and $250.00 per day thereafter for inmate housing, routine onsite healthcare services and costs of restoration services. Client shall be billed separately for exceptional onsite healthcare services including Non-Formulary Medications as defined in Provider's healthcare vendor contract. The billing day as defined herein applies to each Client inmate who is an inmate in, or under control of the Provider's AJF. Neither the acceptance of the inmate into the program nor the acceptance of per diem payments is a guarantee of restoration to competency for any specific inmate. The RTC per diem rate shall remain in effect until June 30, 2011, at which time the Parties shall have agreed to a new RTC per diem rate pursuant to this IGA. Client must pay community providers directly for all health services provided outside the Provider's AJF.

Client shall reimburse Provider at the hourly rate of $30.00 per corrections officer hour and $.55 per mile for van transport for transporting a Client inmate outside the Provider's AJF. A minimum of 2 corrections officers will accompany the Client inmate per Provider policy. In the event a Provider County corrections officer or Sheriff's Deputy must post an officer at an offsite health service location Client shall reimburse Provider at the hourly rate of $30.00 per corrections officer hour.

In the event that Provider's RTC staff is required by the Superior Court in and for Client's County to make a physical court appearance, Client shall reimburse Provider at the daily rate of $900.00 for per diem, time and travel costs for the Provider's RTC Staff. Should Provider RTC staff be required to remain in Client's county overnight, Client will reimburse actual lodging expenses plus an additional $750.00 per day.

In the event Provider RTC staff is required by the Superior Court in and for Client's county to appear in court via video, Client shall reimburse Provider at the hourly rate of $85.00. Client county is responsible for procuring the tele-video equipment that is compatible with that utilized by Provider's RTC program and for any costs required for operation of the tele-video equipment.

In the event legal counsel is required on behalf of the Provider RTC program or staff related to provision of service to Client inmates, Client shall reimburse Provider 100% of billed charges for the Provider's RTC contracted legal service.

Criteria and Rules Governing Billing:

For purposes of this IGA a "billable day" is that period commencing at 0000 hours and ending at 2359 hours that same day, or any fractional part thereof, of any day the Client inmate is in the custody or control of Provider's AJF.

Criteria for Assessment of Billing:

The costs of housing a Client inmate shall commence on the day the inmate was booked into the Provider's AJF. Provider shall cease charging the RTC per diem under the guidelines established earlier in this IGA under the definition of "billable day."

In the event a Client inmate escapes, billing charges will cease to accrue after 2359 hours of the day of escape. Billing charges will begin again on the day that the inmate is recaptured and is actually being held in the Provider's AJF.

At the end of each month after a Client inmate is admitted into the RTC Program, Provider will submit to Client a statement of charges. This statement shall provide the

following information: name of inmate, booking date and hour, release date and hour, indication of booking day billing or subsequent day billing, billing period, daily rates, total billing days, and the total bill. Client shall be allowed access to necessary computer systems in a timely manner as necessary to verify the billing.

Client shall notify Provider in writing of any contested charges within 30 days following receipt of a monthly billing. If Client notifies Provider of a dispute within 30 days of receipt of the monthly billing, Client may withhold payment on each inmate for whom billing is disputed until the dispute has been resolved. It is understood and agreed that the billed charges are deemed accepted and will be paid if no dispute notice is received by Provider within 30 days after the receipt on the monthly billing. Disputes about the billing statement shall be jointly reviewed by both parties and satisfactorily resolved within 45 days of the monthly billing. Excluding contested charges all charges shall be paid within sixty days of receipt of a monthly billing. Contested charges shall be paid within 30 days of resolution of the dispute. A mutually acceptable third party may arbitrate charges remaining unresolved after the 60-day period.

Client shall pay interest on outstanding charges beginning on the 10th day after resolution of the billing at a rate of 10% per annum until paid. Upon paying a previously disputed charge, Client will attach a statement detailing the specific charges that are being paid. Client will attach statement to each check submitted to County indicating the dates for which the check is to be applied.

D. **Term.** The initial term of this IGA shall be effective as of June 1, 2010 and shall continue in effect until June 30 2011. Thereafter it may be renewed annually beginning on July 1 for up to three renewal terms by mutual agreement of the Parties.

E. **Disposal of Property.** Upon the termination of this IGA, all property involved shall revert back to its owner. Termination shall not relieve any party from liabilities or costs already incurred under this IGA, nor affect any ownership of property pursuant to this IGA.

F. **Indemnification.** Each party (as Indemnitor) agrees to indemnify, defend and hold harmless the other party (as Indemnitee) from and against any and all claims, losses, liability, costs or expenses (including reasonable attorney's fees) (hereinafter collectively referred to as "claims") arising out of bodily injury of any person (including death) or property damage, but only to the extent that such claims which result in vicarious/derivative liability to the Indemnitee, are caused by the act, omission, negligence, misconduct, or other fault of the Indemnitor, its officers, officials, employees, or volunteers. Client acknowledges that health care services at the Provider's AJF are provided by independent contractors.

G. **Insurance.** Each party shall obtain and maintain at its own expense, during the entire term of this Contract the following type(s) and amounts of insurance:

1. Commercial General Liability in the amount of $1,000,000.00 combined single limit Bodily Injury and Property Damage.

2. Commercial or Business automobile liability coverage for owned, non-owned and hired vehicles used in the performance of this Contract with limits in the amount of $1,000,000.00 combined single limit or $1,000,000.00 Bodily Injury, $1,000,000.00 Property Damage.

3. Professional liability insurance in the amount of $1,000,000.00 if this Contract involves Professional services

4. If required by law, workers' compensation coverage including employees' liability coverage.

Parties to this agreement shall provide thirty (30) days written notice to all parties to this IGA of cancellation, non-renewal or material change of coverage.

The above requirement may be alternatively met through self insurance pursuant to A.R.S. §§ 11-261 and 11-981 or participation in an insurance risk pool under A.R.S. § 11.952.01 at no less than the minimal coverage levels set forth in this article. Parties to this agreement shall provide thirty (30) days written notice to all other parties of cancellation, non-renewal or material change of coverage.

H. **Compliance with Laws**. The parties shall comply with all federal, state and local laws, rules, regulations, standards and Executive Orders, without limitation to those designated within this IGA. The laws and regulations of the State of Arizona shall govern the rights of the parties, the performance of this IGA and any disputes hereunder. Any action relating to this IGA shall be brought in an Arizona court in Provider County.

I. **Non-Discrimination**. The parties shall not discriminate against any Provider or Client employee, client or any other individual in any way because of that person's age, race, creed, color, religion, sex, disability or national origin in the course of carrying out their duties pursuant to this IGA. The parties shall comply with the provisions of Executive Order 75-5, as amended by Executive Order 99-4, which is incorporated into this IGA by reference, as if set forth in full herein.

J. **ADA**. The parties shall comply with all applicable provisions of the Americans with Disabilities Act (Public Law 101-336, 42 U.S.C. 12101-12213) and all applicable federal regulations under the Act, including 28 CFR Parts 35 and 36.

K. **Severability**. If any provision of this IGA or any application thereof to the parties or any person or circumstances, is held invalid, such invalidity shall not affect other provisions or applications of this IGA which can be given effect, without the invalid provision or application and to this end the provisions of this IGA are declared to be severable.

L. **Conflict of Interest.** This contract is subject to cancellation for conflict of interest pursuant to A.R.S. § 38-511, the pertinent provisions of which are incorporated herein by reference.

M. **Non-Appropriation.** Not withstanding any other provision in this IGA, this IGA may be terminated if for any reason the Provider's or Client's Board of Supervisors does not appropriate sufficient monies for the purpose of maintaining this IGA. In the event of such cancellation, the parties shall have no further obligation to each other except for payment for services rendered prior to cancellation.

N. **Legal Authority.** Neither party warrants to the other its legal authority to enter into this IGA. If a court, at the request of a third person, should declare that either party lacks authority to enter into this IGA, or any part of it, then the IGA, or parts of it affected by such order, shall be null and void, and no recovery may be had by either party against the other for lack of performance or otherwise.

O. **Worker's Compensation.** Each party shall comply with the notice of A.R.S. § 23-1022 (E). For purposes of A.R.S. § 23-1022, irrespective of the operations protocol in place, each party is solely responsible for the payment of Worker's Compensation benefits for its employees.

P. **No Joint Obligations.** Neither party shall be liable for any debts, accounts, obligations or other liabilities whatsoever of the other, including (without limitation) the other party's obligation to withhold Social Security and income taxes for itself or any of its employees.

Q. **No Third Party Beneficiaries.** Nothing in the provisions of this IGA is intended to create duties or obligations to or rights in third parties not parties to this IGA or affect the legal liability of either party to the IGA by imposing any standard of care with respect to the maintenance of public facilities different from the standard of care imposed by law.

R. **Notice.** Any notice required or permitted to be given under this IGA shall be in writing and shall be served by delivery or by certified mail upon the other party as follows (or at such other address as may be identified by a party in writing to the other party) :

Provider:

Yavapai County RTC
2830 N. Commonwealth Dr., Ste 105
Camp Verde, AZ 86322

Client:

Gila County
1400 E. Ash Street
Globe, AZ 85501

With copies to:

County Administrator/
Clerk of the Board
1015 Fair Street
Prescott, AZ 86305

County Administrator/
Clerk of the Board
1400 E. Ash Street
Globe, AZ 85501

S. **Entire Agreement**. This document constitutes the entire Agreement between the parties pertaining to the subject matter hereof, and all prior or contemporaneous agreements and understandings, oral or written, are hereby superseded and merged herein. This IGA shall not be modified, amended, altered or extended except through a written amendment signed by both Parties.

APPROVALS:

YAVAPAI COUNTY

10/4/10
Chairman, Board of Supervisors Date

ATTEST:

10/4/10
Clerk of the Board of Supervisors Date

GILA COUNTY

Michael A Pastor 9/7/10
Chairman, Board of Supervisors Date

ATTEST:

Marian D Reppard, Chief Deputy Clerk 9-7-10
Clerk of the Board of Supervisors Date

DETERMINATIONS OF COUNSEL:

The foregoing Intergovernmental Agreement between Yavapai County and Gila County has been reviewed pursuant to A.R.S. § 11-952 by the undersigned, who have determined that it is in proper form and is within the powers and authority granted under the laws of the State of Arizona to those parties to the Intergovernmental Agreement represented by the undersigned.

YAVAPAI COUNTY

9/22/10
Yavapai County Attorney Date

GILA COUNTY

9-7-2010
Gila County Attorney Date

When recorded,
return to:
Marian Sheppard, BOS
(9/7/10 #3D)

RESOLUTION NO. 10-09-02

RESOLUTION OF THE GILA COUNTY BOARD OF SUPERVISORS TO DESIGNATE A COMPETENCY RESTORATION PROGRAM PURSUANT TO A.R.S. §13-4512(A).

WHEREAS, Gila County is fiscally responsible for in-custody services to restore criminal defendants to competency to stand trial; and,

WHEREAS, pursuant to A.R.S. §13-4512(A) the Gila County Board of Supervisors is authorized to designate a competency restoration treatment program for Gila County criminal defendants in need of restoration treatment; and,

WHEREAS, pursuant to A.R.S. §13-4512(C) the Gila County Board of Supervisors may enter into contracts with in-custody competency restoration treatment providers; and,

WHEREAS, Yavapai County, Arizona, has developed a competency restoration program ("Yavapai County RTC") that has been designated by the Yavapai County Board of Supervisors as the Yavapai County competency restoration program pursuant to A.R.S. §13-4512(A); and,

WHEREAS, the Gila County Board of Supervisors has, pursuant to A.R.S. §13-4512(C), considered and approved an inter-governmental agreement with Yavapai County, Arizona, wherein Yavapai County RTC will provide competency restoration treatment for Gila County criminal defendants.

NOW, THEREFORE, BE IT RESOLVED that the Gila County Board of Supervisors hereby designates Yavapai County RTC as Gila County's primary competency restoration program, effective June 1, 2010.

PASSED AND ADOPTED this 7th day of Sept., 2010, at Globe, Gila County, Arizona.

ATTEST:

Marian Sheppard, Chief Deputy Clerk

GILA COUNTY BOARD OF SUPERVISORS

Michael A. Pastor, Chairman

APPROVED AS TO FORM:

Bryan Chambers, Deputy County Attorney

ARF-6272 **Consent Agenda Item 5. D.**

Regular BOS Meeting

Meeting Date:	10/06/2020		
Submitted For:	Steve Sanders, Director		
Submitted By:	Shannon Boyer, Executive Administrative Asst.		
Department:	Public Works		
Fiscal Year:	2020-2021	Budgeted?:	Yes
Contract Dates Begin & End:	2016 - 2021	Grant?:	No
Matching Requirement?:	Yes	Fund?:	Renewal

Information

Request/Subject

Adoption of Resolution No. 20-10-03 authorizing the execution of Amendment No. Two to an Intergovernmental Agreement (JPA File No. IGA/JPA 16-0005917-I) with the Arizona Department of Transportation (ADOT) for a sidewalk project along Golden Hill Road between Globe and Miami, AZ.

Background Information

On September 6, 2016, the Board adopted Resolution No. 16-09-03 authorizing the approval of an Intergovernmental Agreement (IGA/JPA 16-0005917-I), for a sidewalk project along Golden Hill Road between Globe and Miami, AZ.

On October 16, 2018, the Board adopted Resolution No. 18-10-03 authorizing the execution of Amendment No. One to an Intergovernmental Agreement (IGA/JPA 16-0005917-I) approving an additional $22,300 from Gila County Public Works which came from the County's half-cent transportation excise tax.

In total, this amendment if approved will cost Gila County Public Works $26,992. Again, funding will come from the County's half-cent transportation excise tax.

Evaluation

This additional fee is due to the design changes requested by Gila County. The design change should result in cost savings during construction.

Conclusion

It is the best interest of the County to provide the additional funds necessary for the project to move forward.

Recommendation

The Public Works Department Director recommends that the Gila County Board of Supervisors adopt Resolution No. 20-10-03 approving Amendment No. Two to an Intergovernmental Agreement (IGA/JPA 16-0005917-I) between the State of Arizona, Department of Transportation, and Gila County for an additional $26,992.00 for the scoping, design, and project development administration cost associated with the Golden Hill Sidewalk Project between Globe and Miami, AZ.

Suggested Motion

Adoption of Resolution No. 20-10-03 which authorizes the execution of Amendment No. Two to an Intergovernmental Agreement (IGA/JPA 16-0005917-I) between Gila County and the State of Arizona, Department of Transportation, for an additional $26,992 for the scoping, design, and project development administration cost associated with the Golden Hill Sidewalk Project between Globe and Miami, AZ.

Attachments

Resolution No. 20-10-03

Amendment 2

Amendment 1

IGA/JPA 16-0005917-I

When recorded please send to
Marian Sheppard, BOS

RESOLUTION NO. 20-10-03

A RESOLUTION OF THE BOARD OF SUPERVISORS OF GILA COUNTY, ARIZONA, AUTHORIZING THE EXECUTION OF AMENDMENT NO. TWO TO AN INTERGOVERNMENTAL AGREEMENT (IGA/JPA 16-0005917-I) BETWEEN GILA COUNTY AND THE STATE OF ARIZONA, DEPARTMENT OF TRANSPORTATION, FOR THE DESIGN AND CONSTRUCTION OF A SIDEWALK ALONG GOLDEN HILL ROAD BETWEEN GLOBE AND MIAMI, ARIZONA

WHEREAS, the Gila County Board of Supervisors is desirous of undertaking the design and construction of a sidewalk along Golden Hill Road between Globe and Miami, Arizona; and

WHEREAS, on September 6, 2016, the Gila County Board of Supervisors adopted Resolution No. 16-09-03 authorizing the execution of an Intergovernmental Agreement (IGA/JPA 16-0005917-I) with regard to the design and construction of a sidewalk along Golden Hill Road; and

WHEREAS, on October 16, 2018, the Gila County Board of Supervisors adopted Resolution No. 18-10-03 authorizing Amendment No. One revising the funding; and

WHEREAS, Amendment No. Two to IGA/JPA 16-0005917-I revises the funding; and

WHEREAS, an Intergovernmental Agreement or any subsequent amendment to the Intergovernmental Agreement requires a resolution of Gila County to authorize execution of the agreement;

NOW, THEREFORE, BE IT RESOLVED, that the Gila County Board of Supervisors authorizes the execution of Amendment No. Two to an Intergovernmental Agreement (IGA/JPA 16-0005917-I) between Gila County and the State of Arizona, Department of Transportation, for the design and construction of a sidewalk along Golden Hill Road between Globe and Miami, Arizona.

PASSED AND ADOPTED this 6th day of October 2020, at Globe, Gila County, Arizona.

Attest: **GILA COUNTY BOARD OF SUPERVISORS**

_____ _____
Marian Sheppard, Clerk of the Board Woody Cline, Chairman

Approved as to form:

_____
The Gila County Attorney's Office

ADOT File No.: IGA/ JPA 16-0005917-I
Amendment No. Two: 20-0007844-I
AG Contract No.: P00120160001968
Project Location/Name: Golden Hill Rd.–Russell Rd. to Main St.
Type of Work: Construct Sidewalk
Federal-aid No.: GGI-0(216)T
ADOT Project No.: T009001D/03D/01C
TIP/STIP No.: GIL 18-01D & GIL 22-01C
CFDA No.: 20.205 - Highway Planning and Construction
Budget Source Item No.: N/A

AMENDMENT NO. TWO
TO
INTERGOVERNMENTAL AGREEMENT

BETWEEN
THE STATE OF ARIZONA
AND
THE GILA COUNTY

THIS AMENDMENT NO. TWO to INTERGOVERNMENTAL AGREEMENT (the "Amendment No. Two"), is entered into this date _____, pursuant to Arizona Revised Statutes ("A.R.S.") §§ 11-951 through 11-954, as amended, between the STATE OF ARIZONA, acting by and through its DEPARTMENT OF TRANSPORTATION (the "State" or "ADOT") and the GILA COUNTY, acting by and through its CHAIRMAN and BOARD OF SUPERVISORS (the "County"). The State and the County are collectively referred to as the "Parties."

WHEREAS, the INTERGOVERNMENTAL AGREEMENT, IGA/JPA 16-0005917-I, A.G. Contract No. P00120160001968, was executed on September 12, 2016, (the "Original Agreement"); IGA/JPA 16-0005917-I Amendment No. One, executed on October 30, 2018, (the "Amendment No. One");

WHEREAS, the State is empowered by A.R.S. § 28-401 to enter into this Amendment No. Two and has delegated to the undersigned the authority to execute this Amendment No. Two on behalf of the State;

WHEREAS, the County is empowered by A.R.S. § 11-251 to enter into this Amendment No. Two and has by resolution, a copy of which is attached and made a part of, resolved to enter into this Amendment No. Two and has authorized the undersigned to execute this Amendment No. Two on behalf of the County; and

NOW THEREFORE, in consideration of the mutual terms expressed herein, the purpose of this Amendment No. Two is to revise Project costs. The Parties desire to amend the Original Agreement and Amendment No. One, as follows:

Consistent with the Original Agreement and Amendment No. One, the County has been invoiced and paid $59,916.00 and will pay the remaining $26,992.00 for the County's share of PDA and design costs within 30 days of receipt of an invoice.

I. RECITALS

Section I, Paragraph 7., is revised, as follows:

7. The federal funds will be used for the scoping/design and construction of the Project, including the construction engineering and administration cost (CE). The estimated Project costs are as follows:

T0090 01D (ADOT Project Development Administration Cost (PDA) formerly referred to as PMDR, Cost, non-federal-aid):

PDA costs*	$ 40,000.00

T0090 03D (scoping/design):

Federal-aid funds @ 94.3%	$ 125,000.00
County's match @ 5.7%	$ 7,556.00
County's match @ 100%	$ 39,352.00
Subtotal – Scoping/Design/PDA	**$ 211,908.00**

T0090 01C (construction):

Federal-aid funds @ 94.3%	$ 965,244.00
County's match @ 5.7%	$ 58,344.00
County's contribution @ 100%	$ 26,400.00
Subtotal – Construction**	**$1,049,988.00**
Total Estimated County Funds	**$ 171,652.00**
Total Federal Funds	**$1,090,244.00**
Estimated TOTAL Project Cost	**$1,261,896.00**

* (Included in the County Estimated Funds)
** (Includes 15% CE (this percentage is subject to change, any change will require concurrence from the County) and 5% Project contingencies)

II. SCOPE OF WORK

Section II, Paragraph e. is revised as follows:

1. The State will:

   e. After completion of design and prior to bid advertisement, invoice the County for the actual PDA costs, as applicable, and the County's match and contribution of the Project construction costs estimated at $84,744.00. After the Project costs for construction are finalized, the State will either invoice or reimburse the County for the difference between estimated and actual costs. De-obligate or otherwise release any remaining federal funds from the scoping/design phase of the Project.

Section II, Paragraph d., is revised as follows:

2. The County will:

   d. After completion of design, within 30 days of receipt of an invoice from the State and prior to bid advertisement, pay to the State, any outstanding PDA costs and the County's match and contribution of the Project construction costs estimated at $84,744.00**.** Be responsible for and pay the difference between the estimated and actual construction costs of the Project, within 30 days of receipt of an invoice.

<u>III. MISCELLANEOUS PROVISIONS</u>

(NO CHANGES)

EXCEPT AS AMENDED, **ALL OTHER** terms and conditions of the Original Agreement and Amendment No. One remain in full force and effect.

THIS AMENDMENT NO. TWO shall become effective upon signing and dating of the Determination Letter by the State's Attorney General.

IN ACCORDANCE WITH A.R.S. § 11-952 (D) attached and incorporated in this Amendment No. Two is the written determination of each Party's legal counsel that the Parties are authorized under the laws of this State to enter into this Amendment No. Two and that the Amendment No. Two is in proper form.

IN WITNESS WHEREOF, the Parties have executed this Amendment No. Two the day and year first above written.

GILA COUNTY

By _____
WOODY CLINE
Chairman
Board of Supervisors

ATTEST:

By _____
MARIAN E. SHEPPARD
Clerk
Board of Supervisors

STATE OF ARIZONA
Department of Transportation

By _____
STEVE BOSCHEN, PE
Division Director

ATTORNEY APPROVAL FORM FOR THE GILA COUNTY

I have reviewed the above referenced Amendment No. Two to the Original Agreement and Amendment No. One between the State of Arizona, acting by and through its DEPARTMENT OF TRANSPORTATION, and the GILA COUNTY, an agreement among public agencies which, has been reviewed pursuant to Arizona Revised Statutes §§ 11-951 through 11-954 and declare this Amendment No. Two to be in proper form and within the powers and authority granted to the County under the laws of the State of Arizona.

No opinion is expressed as to the authority of the State to enter into this Amendment No. Two.

_____ _____

The Gila County Attorney's Office Date

ADOT File No.: IGA/ JPA.: 16-0005917-I
Amendment No. One: 18-0007162-I
AG Contract No.: P0012016001968
Project Location/Name: Golden Hill Rd.-
Russell Rd. to Main St.
Type of Work: Construct Sidewalk
Federal-aid No.: GGI-0(216)T
ADOT Project No.: T009001D/03D/01C
TIP/STIP No.: GIL 18-01D & GIL 22-01C
CFDA No.: 20.205 - Highway Planning and Construction
Budget Source Item No.: N/A

AMENDMENT NO. ONE
TO
INTERGOVERNMENTAL AGREEMENT

BETWEEN
THE STATE OF ARIZONA
AND
GILA COUNTY

THIS AMENDMENT NO. ONE to INTERGOVERNMENTAL AGREEMENT (the "Amendment No. One"), is entered into this date _____, pursuant to Arizona Revised Statutes ("A.R.S") §§ 11-951 through 11-954, as amended, between the STATE OF ARIZONA, acting by and through its DEPARTMENT OF TRANSPORTATION (the "State" or "ADOT") and the GILA COUNTY, acting by and through its CHAIRMAN and BOARD OF SUPERVISORS (the "County"). The County and State are collectively referred to as the "Parties."

WHEREAS, the INTERGOVERNMENTAL AGREEMENT, IGA/JPA 16-0005917-I, A.G. Contract No. P0012016001968, was executed on September 12, 2016, (the "Original Agreement");

WHEREAS, the State is empowered by A.R.S § 28-401 to enter into this Amendment No. One and has delegated to the undersigned the authority to execute this Amendment No. One on behalf of the State;

WHEREAS, the County is empowered by A.R.S § 11-251 to enter into this Amendment No. One and has by resolution, a copy of which is attached and made a part of, resolved to enter into this Amendment No. One and has authorized the undersigned to execute this Amendment No. One on behalf of the County;

NOW THEREFORE, in consideration of the mutual terms expressed herein, the purpose of this Amendment No. One is to revise the Project costs. The Parties desire to amend the Original Agreement as follows:

I. RECITALS

Section I, Paragraph 7., is revised, as follows:

7. The federal funds will be used for the scoping/design and construction of the Project, including the construction engineering and administration cost (CE). The estimated Project costs are as follows:

T0090 01D (ADOT Project Development Administration Cost (PDA) formerly referred to as PMDR, Cost, non-federal-aid):

PDA costs*	$ 35,000.00

T0090 03D (scoping/design):

Federal-aid funds @ 94.3% (capped)	$ 125,000.00
County's match @ 5.7%	$ 7,556.00
County's match @ 100%	$ 17,360.00
Subtotal – Scoping/Design/PDA	**$184,916.00**

T0090 01C (construction):

Federal-aid funds @ 94.3% (capped)	$ 225,000.00
County's match @ 5.7%	$ 13,600.00
County's contribution @ 100%	$ 26,400.00
Subtotal – Construction**	**$265,000.00**
Total Estimated County Funds	**$ 99,916.00**
Total Federal Funds	**$ 350,000.00**
Estimated TOTAL Project Cost	**$ 449,916.00**

* (Included in the County Estimated Funds)
** (Includes 15% CE (this percentage is subject to change, any change will require concurrence from the County) and 5% Project contingencies)

Consistent with the Original Agreement, the County has been invoiced and paid $37,556.00 for PDA and design costs, and will pay the remaining $22,360.00 for the County's share of PDA and design costs within 30 days of receipt of an invoice from the State.

II. SCOPE OF WORK

(NO CHANGES)

III. MISCELLANEOUS PROVISIONS

Section III, Paragraph(s) 20., and 21., are added, as follows:

20. The County acknowledges and will comply with Title VI of the Civil Rights Act Of 1964.

21. The Parties shall certify that all contractors comply with the applicable requirements of A.R.S §35-393.01.

EXCEPT AS AMENDED, **ALL OTHER** terms and conditions of the Original Agreement remain in full force and effect.

THIS AMENDMENT NO. ONE shall become effective upon signing and dating of the Determination Letter by the State's Attorney General.

IN ACCORDANCE WITH A.R.S § 11-952 (D) attached and incorporated in this Amendment No. One is the written determination of each Party's legal counsel that the Parties are authorized under the laws of this State to enter into this Amendment No. One and that the Amendment No. One is in proper form.

IN WITNESS WHEREOF, the Parties have executed this Amendment No. One the day and year first above written.

GILA COUNTY

By _____
TIM R. HUMPHREY
Chairman
Board of Supervisors

ATTEST:

By _____
MARIAN E. SHEPPARD
Clerk
Board of Supervisors

STATE OF ARIZONA
Department of Transportation

By _____
STEVE BOSCHEN, PE
Division Direcotr

ATTORNEY APPROVAL FORM FOR GILA COUNTY

I have reviewed the above referenced Amendment No. One to the Original Agreement between the State of Arizona, acting by and through its DEPARTMENT OF TRANSPORTATION, and the GILA COUNTY, an agreement among public agencies which, has been reviewed pursuant to Arizona Revised Statutes §§ 11-951 through 11-954 and declare this Amendment No. One to be in proper form and within the powers and authority granted to the County under the laws of the State of Arizona.

No opinion is expressed as to the authority of the State to enter into this Amendment No. One.

DATED this _____ day of _____, 2018.

_____

Jefferson R. Dalton
Deputy Gila County Attorney
Civil Bureau Chief

ADOT File No.: IGA/JPA 16-0005917-I
AG Contract No.: P001 2016 001968
Project Name: Golden Hill Rd - Russell Rd to Main St.
Project Location: Golden Hill Rd - Russell Rd to Main St.
Federal-aid No.: GGI-0(216)T
ADOT Project No.: T0090 01D/03D/01C
TIP/STIP No.: GIL18-01D & GIL22-01C
Budget Source Item No.: N/A

INTERGOVERNMENTAL AGREEMENT

BETWEEN
THE STATE OF ARIZONA
AND
GILA COUNTY

THIS AGREEMENT is entered into this date September 12, 2016, pursuant to the Arizona Revised Statutes §§ 11-951 through 11-954, as amended, between the STATE OF ARIZONA, acting by and through its DEPARTMENT OF TRANSPORTATION (the "State" or "ADOT") and the GILA COUNTY, acting by and through its CHAIRMAN and BOARD OF SUPERVISORS (the "County"). The State and the County are collectively referred to as "Parties."

I. RECITALS

1. The State is empowered by Arizona Revised Statutes § 28-401 to enter into this Agreement and has delegated to the undersigned the authority to execute this Agreement on behalf of the State.

2. The County is empowered by Arizona Revised Statutes § 11-251 to enter into this Agreement and has by resolution, a copy of which is attached hereto and made a part hereof, resolved to enter into this Agreement and has authorized the undersigned to execute this Agreement on behalf of the County.

3. The improvements proposed in this Agreement, include the design and construction of sidewalks on Golden Hilll Road from Russell Road to Main Street, (the "Project"). The Project will tie into the Main Street Sidewalk Project. The State will administer the design and advertise, bid and award the construction phase of the Project.

4. The County, in order to obtain federal funds for the design and/or construction of the Project, is willing to provide County funds to match federal funds in the ratio required or as finally fixed and determined by the County and FHWA.

5. The interest of the State in this Project is the acquisition of federal funds for the use and benefit of the County and the authorization of such federal funds for the Project pursuant to federal law and regulations. The State will be the designated agent for the County for the Project, if the Project is approved by FHWA and funding for the Project is available. The Project will be performed, completed, accepted and paid for in accordance with the requirements of the Project specifications and terms and conditions.

6. The Parties shall perform their responsibilities consistent with this Agreement; any change or modification to the Project will only occur with the mutual written consent of both Parties.

7. The federal funds will be used for the scoping/design and construction of the Project, including the construction engineering and administration cost (CE). The estimated Project costs are as follows:

T0090 01D (ADOT Project Management & Design Review (PMDR) Cost, non-federal-aid):

PMDR costs*	$ 30,000.00
T0090 03D (scoping/design):	
Federal-aid funds @ 94.3% (capped)	$ 125,000.00
County's match @ 5.7%	$ 7,556.00
Subtotal – Scoping/Design/PMDR	**$ 162,556.00**
T0090 01C (construction):	
Federal-aid funds @ 94.3% (capped)	$ 225,000.00
County's match @ 5.7%	$ 13,600.00
County's contribution @ 100%	$ 26,400.00
Subtotal – Construction**	**$ 265,000.00**
Total Estimated County Funds	**$ 77,556.00**
Total Federal Funds	**$ 350,000.00**
Estimated TOTAL Project Cost	**$ 427,556.00**

* (Included in the County Estimated Funds)
** (Includes 15% CE (this percentage is subject to change, any change will require concurrence from the County) and 5% Project contingencies)

8. The Parties acknowledge that the final Project amount may exceed the initial estimate(s) shown above, and in such case, the County is responsible for, and agrees to pay, any and all actual costs exceeding the initial estimate. If the final bid amount is less than the initial estimate, the difference between the final bid amount and the initial estimate will be de-obligated or otherwise released from the Project. The County acknowledges it remains responsible for, and agrees to pay according to the terms of this Agreement, any and all actual costs exceeding the final bid amount.

THEREFORE, in consideration of the mutual Agreements expressed herein, it is agreed as follows:

II. SCOPE OF WORK

1. The State will:

   a. Execute this Agreement, and if the Project is approved by FHWA and funds for the Project are available, be the County's designated agent for the Project.

   b. Execute this Agreement, and prior to performing or authorizing any work, invoice the County for the initial PMDR costs, estimated at **$30,000.00** and the County's share of the Project design costs, estimated at **$7,556.00**. If actual PMDR costs exceed the estimate during the development of design, notify the County and obtain concurrence prior to continuing with the development of design. Once the Project costs have been finalized, the State will either invoice or reimburse the County for the difference between estimated and actual costs.

c. After receipt of the PMDR costs and the County's estimated share of the Project design costs, on behalf of the County, prepare and provide all documents pertaining to the design and post-design of the Project, incorporating comments from the County, as appropriate; and review and approve documents required by FHWA to qualify the Project for and to receive federal funds. Such work may consist of, but is not specifically limited to, preparation of environmental documents; analysis and documentation of environmental categorical exclusion determinations; geologic materials testing and analysis; right-of-way related activities; preparation of reports, design plans, maps, specifications and cost estimates and such other related tasks essential to the achievement of the objectives of this Agreement.

d. Submit all required documentation pertaining to the Project to FHWA with the recommendation that the maximum federal funds programmed for this Project be approved for scoping/design. With FHWA authorization, proceed to advertise for and enter into contract(s) with the consultant(s) for the design and post design of the Project. Should costs exceed the maximum federal funds available it is understood and agreed that the County will be responsible for any overage.

e. After completion of design and prior to bid advertisement, invoice the County for the County's share of the Project construction costs, estimated at **$40,000.00.** Once the Project costs have been finalized, the State will either invoice or reimburse the County for the difference between estimated and actual costs; de-obligate or otherwise release any remaining federal funds from the scoping/design phase of the Project.

f. After receipt of the County's estimated share of the Project construction costs, submit all required documentation to FHWA with the recommendation that the maximum federal funds programmed for construction of this Project be approved. Should costs exceed the maximum federal funds available, it is understood and agreed that the County will be responsible for any overage.

g. With FHWA authorization, proceed to administer construction, advertise for, receive and open bids, award and enter into a contract with the firm for the construction of the Project. If the bid amounts exceed the construction cost estimate, obtain County concurrence prior to awarding the contract. Once awarded, invoice the County for the difference between estimated and actual costs, if applicable.

h. Be granted, without cost requirements, the right to enter County right-of-way as required to conduct any and all construction and pre-construction related activities for said Project, including without limitation, temporary construction easements or temporary rights of entry on to and over said rights-of-way of the County.

i. Not be obligated to maintain the Project, should the County fail to budget or provide for proper and perpetual maintenance as set forth in this Agreement.

2. The County will:

a. Designate the State as the County's authorized agent for the Project.

b. Within 30 days of receipt of an invoice from the State, pay the initial PMDR costs, estimated at **$30,000.00** and the County's Project design costs, estimated at **$7,556.00**. Agree to be responsible for actual PMDR costs, if during the development of design, PMDR costs exceed the initial estimate. Be responsible for any difference between the estimated and actual PMDR and design costs of the Project within 30 days of receipt of an invoice.

c. Review design plans, specifications, cost estimates and other such documents required for the construction bidding and construction of the Project, including scoping/design plans and

documents required by FHWA to qualify projects for and to receive federal funds; provide design review comments to the State as appropriate.

d. After completion of design, within 30 days of receipt of an invoice from the State and prior to bid advertisement, pay to the State, the County's Project construction costs, estimated at **$40,000.00.** Once the Project costs have been finalized, the State will either invoice or reimburse the County for the difference between estimated and actual costs.

e. Be responsible for all costs incurred in performing and accomplishing the work as set forth under this Agreement, that are not covered by federal funding. Should costs be deemed ineligible or exceed the maximum federal funds available, it is understood and agreed that the County is responsible for these costs; payment for these costs shall be made within 30 days of receipt of an invoice from the State.

f. Certify that all necessary rights-of-way have been or will be acquired prior to advertisement for bid and that all obstructions or unauthorized encroachments of any nature, either above or below the surface of the Project area, shall be removed from the proposed right-of-way or will be removed prior to the start of construction, in accordance with The Uniform Relocation Assistance and Real Property Acquisition Policies Act of 1970 as amended; 49 CFR 24.102 Basic Acquisition Policies; 49 CFR 24.4 Assurances, Monitoring and Corrective Action, parts (a) & (b) and ADOT ROW Manual: 8.02 Responsibilities, 8.03 Prime Functions, 9.06 Monitoring Process and 9.07 Certification of Compliance. Coordinate with the appropriate State's Right-of-Way personnel during any right-of-way process performed by the County, if applicable.

g. Not permit or allow any encroachments on or private use of the right-of-way, except those authorized by permit. In the event of any unauthorized encroachment or improper use, the County shall take all necessary steps to remove or prevent any such encroachment or use.

h. Grant the State, its agents and/or contractors, without cost, the right to enter County rights-of-way, as required, to conduct any and all construction and preconstruction related activities, including without limitation, temporary construction easements or temporary rights of entry to accomplish among other things, soil and foundation investigations.

i. Be obligated to incur any expenditure should unforeseen conditions or circumstances increase Project costs. Be responsible for the cost of any County requested changes to the scope of work of the Project, such changes will require State and FHWA approval. Be responsible for any contractor claims for additional compensation caused by Project delay attributable to the County. Payment for these costs will be made to the State within 30 days of receipt of an invoice from the State.

j. Upon notification of Project completion, agree to accept, maintain and assume full responsibility of the Project and all Project components in writing.

III. MISCELLANEOUS PROVISIONS

1. The terms, conditions and provisions of this Agreement shall remain in full force and effect until completion of the Project and all related deposits and/or reimbursements are made. Any provisions for maintenance shall be perpetual, unless assumed by another competent entity. This Agreement may be cancelled at any time prior to the award of the Project contract and after 30 days written notice to the other Party. It is understood and agreed that, in the event the County terminates this Agreement, the County will be responsible for all costs incurred by the State up to the time of termination. It is further understood and agreed that in the event the County terminates this Agreement, the State shall in no way be obligated to complete or maintain the Project. Upon termination of this agreement, each Party shall retain its respective property and

property belonging to one which was furnished to the other shall be returned to the furnishing party.

2. The County shall indemnify, defend, and hold harmless the State, any of its departments, agencies, officers or employees (collectively referred to in this paragraph as the "State") from any and all claims, demands, suits, actions, proceedings, loss, cost and damages of every kind and description, including reasonable attorneys' fees and/or litigation expenses (collectively referred to in this paragraph as the "Claims"), which may be brought or made against or incurred by the State on account of loss of or damage to any property or for injuries to or death of any person, to the extent caused by, arising out of, or contributed to, by reasons of any alleged act, omission, professional error, fault, mistake, or negligence of the County, its employees, officers, directors, agents, representatives, or contractors, their employees, agents, or representatives in connection with or incident to the performance of this Agreement. The County's obligations under this paragraph shall not extend to any Claims to the extent caused by the negligence of the State, except the obligation does apply to any negligence of the County which may be legally imputed to the State by virtue of the State's ownership or possession of land. The County's obligations under this paragraph shall survive the termination of this Agreement.

3. The State shall include Section 107.13 of the 2008 version of the Arizona Department of Transportation Standard Specifications for Road and Bridge Construction, incorporated to this Agreement by reference, in the State's contract with any and all contractors, of which the County shall be specifically named as a third-party beneficiary. This provision may not be amended without the approval of the County.

4. The cost of scoping, design, construction and construction engineering work under this Agreement is to be covered by the federal funds set aside for this Project, up to the maximum available. The County acknowledges that the actual costs may exceed the maximum available amount of federal funds, or that certain costs may not be accepted by the federal government as eligible for federal funds. Therefore, the County agrees to pay the difference between actual Project costs and the federal funds received.

5. Each party is responsible to provide financing and establish and maintain a budget for its respective obligations under this agreement.

6. Should the federal funding related to this Project be terminated or reduced by the federal government, or Congress rescinds, fails to renew, or otherwise reduces apportionments or obligation authority, the State shall in no way be obligated for funding or liable for any past, current or future expenses under this Agreement.

7. The cost of the project under this Agreement includes indirect costs approved by FHWA, as applicable.

8. The Parties warrant compliance with the Federal Funding Accountability and Transparency Act of 2006 and associated 2008 Amendments (the "Act"). Additionally, in a timely manner, the County will provide information that is requested by the State to enable the State to comply with the requirements of the Act, as may be applicable.

9. The County acknowledges compliance with federal laws and regulations and may be subject to the Office of Management and Budget (OMB), Single Audit, Circular A-133 (Audits of States, Local Governments, and Non-Profit Organizations). Entities that expend $500,000.00 or more (prior to 12/26/14) and $750,000.00 or more (on or after 12/26/14) of federal assistance (federal funds, federal grants, or federal awards) are required to comply by having an independent audit. Either an electronic or hardcopy of the Single Audit is to be sent to Arizona Department of Transportation Financial Management Services within the required deadline of nine months of the sub recipient fiscal year end.

ADOT – FMS
Attn: Cost Accounting Administrator
206 S 17th Ave. Mail Drop 204B
Phoenix, AZ 85007
SingleAudit@azdot.gov

10. This Agreement shall become effective upon signing and dating of the Determination Letter by the State's Attorney General.

11. This Agreement may be cancelled in accordance with Arizona Revised Statutes § 38-511.

12. To the extent applicable under law, the provisions set forth in Arizona Revised Statutes §§ 35-214 and 35-215 shall apply to this Agreement.

13. This Agreement is subject to all applicable provisions of the Americans with Disabilities Act (Public Law 101-336, 42 U.S.C. 12101-12213) and all applicable federal regulations under the Act, including 28 CFR Parts 35 and 36. The parties to this Agreement shall comply with Executive Order Number 2009-09 issued by the Governor of the State of Arizona and incorporated herein by reference regarding "Non-Discrimination".

14. Non-Availability of Funds: Every obligation of the State under this Agreement is conditioned upon the availability of funds appropriated or allocated for the fulfillment of such obligations. If funds are not allocated and available for the continuance of this Agreement, this Agreement may be terminated by the State at the end of the period for which the funds are available. No liability shall accrue to the State in the event this provision is exercised, and the State shall not be obligated or liable for any future payments as a result of termination under this paragraph.

15. In the event of any controversy, which may arise out of this Agreement, the Parties hereto agree to abide by required arbitration as is set forth for public works contracts in Arizona Revised Statutes § 12-1518.

16. The Parties shall comply with the applicable requirements of Arizona Revised Statutes § 41-4401. That each contractor and subcontractor warrants their compliance with all federal immigration laws and regulations that relate to their employees and their compliance with section 23-214, subsection A. 2. That a breach of a warranty under paragraph 1 shall be deemed a material breach of the contract that is subject to penalties up to and including termination of the contract. That the government entity retains the legal right to inspect the papers of any contractor or subcontractor employee who works on the contract to ensure that the contractor or subcontractor is complying with the warrant under paragraph 1.

17. The Parties hereto shall comply with all applicable laws, rules, regulations and ordinances, as may be amended.

18. All notices or demands upon any Party to this Agreement shall be in writing and shall be delivered in person or sent by mail, addressed as follows:

For Agreement Administration:

Arizona Department of Transportation
Joint Project Administration
205 S. 17th Avenue, Mail Drop 637E
Phoenix, Arizona 85007
(602) 712-7124
(602) 712-3132 Fax

Gila County
Attn: Steve Sanders
745 N Rose Mofford Way
Globe, AZ 85501
(928) 402-8521
(928) 402-8104 Fax

For Project Administration:

Arizona Department of Transportation

Gila County

Project Management Group
1615 W Jackson St.
Phoenix, AZ 85007
(602) 712-4428

Attn: Steve Sanders
745 N Rose Mofford Way
Globe, AZ 85501
(928) 402-8521
(928) 402-8104 Fax

For Financial Administration:
Arizona Department of Transportation
Joint Project Administration
205 S. 17th Avenue, Mail Drop 637E
Phoenix, Arizona 85007
(602) 712-7124
(602) 712-3132 Fax

Gila County
Attn: Steve Sanders
745 N Rose Mofford Way
Globe, AZ 85501
(928) 402-8521
(928) 402-8104 Fax

19. In accordance with Arizona Revised Statutes § 11-952 (D) attached hereto and incorporated herein is the written determination of each Party's legal counsel that the Parties are authorized under the laws of this State to enter into this Agreement and that the Agreement is in proper form.

IN WITNESS WHEREOF, the Parties have executed this Agreement the day and year first above written.

GILA COUNTY

By _____
MICHAEL A. PASTOR, Chairman
Board of Supervisors

STATE OF ARIZONA
Department of Transportation

By _____
STEVE BOSCHEN, P.E.
IDO Assistant Director

ATTEST:

By _____
MARIAN SHEPPARD, Clerk
Board of Supervisors

DocuSign Envelope ID: D645930C-77E5-4294-8CA4-AB0766C481DC

Project Management Group
1615 W Jackson St.
Phoenix, AZ 85007
(602) 712-4428

Attn: Steve Sanders
745 N Rose Mofford Way
Globe, AZ 85501
(928) 402-8521
(928) 402-8104 Fax

For Financial Administration:
Arizona Department of Transportation
Joint Project Administration
205 S. 17th Avenue, Mail Drop 637E
Phoenix, Arizona 85007
(602) 712-7124
(602) 712-3132 Fax

Gila County
Attn: Steve Sanders
745 N Rose Mofford Way
Globe, AZ 85501
(928) 402-8521
(928) 402-8104 Fax

19. In accordance with Arizona Revised Statutes § 11-952 (D) attached hereto and incorporated herein is the written determination of each Party's legal counsel that the Parties are authorized under the laws of this State to enter into this Agreement and that the Agreement is in proper form.

IN WITNESS WHEREOF, the Parties have executed this Agreement the day and year first above written.

GILA COUNTY

By _____
MICHAEL A. PASTOR, Chairman
Board of Supervisors

STATE OF ARIZONA
Department of Transportation

DocuSigned by:
By _____
2C8E28BDDCBC4A2...
STEVE BOSCHEN, P.E.
IDO Assistant Director

ATTEST:

By _____
MARIAN SHEPPARD, Clerk
Board of Supervisors

IGA/JPA 16-0005917-I

ATTORNEY APPROVAL FORM FOR GILA COUNTY

I have reviewed the above referenced Intergovernmental Agreement between the State of Arizona, acting by and through its DEPARTMENT OF TRANSPORTATION, and GILA COUNTY an agreement among public agencies which, has been reviewed pursuant to Arizona Revised Statutes §§ 11-951 through 11-954 and declare this Agreement to be in proper form and within the powers and authority granted to the County under the laws of the State of Arizona.

No opinion is expressed as to the authority of the State to enter into this Agreement.

DATED this 6th day of September, 2016.

Jefferson R. Dalton, Deputy Gila County Attorney, Civil Bureau Chief

MARK BRNOVICH
ATTORNEY GENERAL

OFFICE OF THE ARIZONA ATTORNEY GENERAL
STATE GOVERNMENT DIVISION /
TRANSPORTATION SECTION

DAWN NORTHUP
DIVISION CHIEF COUNSEL
SUSAN E. DAVIS
ASSISTANT ATTORNEY GENERAL
DIRECT LINE: 602-542-8855
E-MAIL: SUSAN.DAVIS@AZAG.GOV

INTERGOVERNMENTAL AGREEMENT DETERMINATION

A.G. Contract No. P0012016001968 **(ADOT IGA/JPA 16-0005917-I,** an Agreement between public agencies, the State of Arizona and Gila County, has been reviewed pursuant to A.R.S. §§ 11-952, as amended, by the undersigned Assistant Attorney General who has determined that it is in the proper form and is within the powers and authority granted to the State of Arizona.

No opinion is expressed as to the authority of the remaining Parties, other than the State or its agencies, to enter into said Agreement.

DATED: September 12, 2016

MARK BRNOVICH
Attorney General

Susan Davis

SUSAN E. DAVIS
Assistant Attorney General
Transportation Section

SED:ln:5313531
Attachment

ARF-6253 **Consent Agenda Item 5. E.**

Regular BOS Meeting

Meeting Date: 10/06/2020
Submitted For: Steve Sanders, Director
Submitted By: Shannon Boyer, Executive Administrative Asst.
Department: Public Works

Information

Request/Subject

Adoption of Resolution No. 20-10-02 authorizing the disposal of a portion of New Street as shown on the Miami Map No. 2 GCR Map 23, Gila County Records, and the Chairman's signature on the Quit Claim Deed deeding a portion of New Street to Freeport-McMoRan Miami Inc. (FMMI).

Background Information

During the regular meeting of the Gila County Board of Supervisors held on August 17, 2020, the Board accepted a bid in the amount of $1,488 from FMMI for the purchase of a portion of New Street as shown on the Miami Map No. 2 GCR Map 23.

Evaluation

The bidder has met all the requirements of the current Gila County policy on the purchase of roadways in Gila County.

Conclusion

The next and final step in the process is for the Board of Supervisors to adopt a resolution which authorizes the disposal of a portion of New Street as shown on the Miami Map No. 2 GCR Map 23, Gila County Records, Gila County, Arizona, and the Chairman's signature on the Quit Claim Deed deeding the roadway to FMMI.

Recommendation

It is the recommendation of the Public Works Department Director that the Board of Supervisors adopt Resolution No. 20-10-02.

Suggested Motion

Adoption of Resolution No. 20-10-02 authorizing the disposal of a portion of New Street (as shown on the Miami Map No. 2 GCR Map 23, Gila County Records, Gila County, AZ), and authorizing the Board of Supervisors' Chairman to execute and deliver in the name and under the seal of the County of Gila, a Quit Claim Deed conveying said portion of New Street to Freeport-McMoRan Miami Inc.

Attachments

Resolution No. 20-10-02

Quit Claim Deed From Gila County to FMMI

When recorded please send to
Marian Sheppard, BOS

RESOLUTION NO. 20-10-02

A RESOLUTION APPROVING THE DISPOSAL OF A PORTION OF NEW STREET AS SHOWN ON MIAMI MAP NO. 2 GCR MAP 23, GILA COUNTY RECORDS, GILA COUNTY, ARIZONA

WHEREAS, Freeport-McMoRan Miami Inc. is the owner of land (the "Land") which adjoins that parcel of land hereinbefore described; and

WHEREAS, it has been determined that the disposal of the roadway will not leave any property without access to public roads and streets of Gila County, and is not necessary for public use, and the same should be granted; and

WHEREAS, it is to the best interest of the COUNTY OF GILA to be relieved of the obligation to maintain said parcel of land;

NOW, THEREFORE, BE IT RESOLVED by the Gila County Board of Supervisors:

Section 1: That the land described herein and constituting a portion of New Street, Miami Map No. 2 GCR Map 23, Gila County Records, Gila County, Arizona, is hereby vacated and abandoned, subject, however, to all existing water, gas and utility easements now existing on said parcels of land.

Section 2: That the Chairman of the said Board of Supervisors, be, and he is hereby authorized, empowered and directed to make, execute and deliver in the name and under the seal of the COUNTY OF GILA, a quit claim deed conveying Freeport-McMoRan Miami Inc. as the owner of the land, that parcel of land hereinbefore described, and to cause said deed to be attested and the seal of the said COUNTY OF GILA to be affixed thereto by the Clerk of the Board of said Supervisors.

The quit claim deed and legal description is attached for informational purposes only and will be recorded as a separate document.

PASSED AND ADOPTED this 6th day of October 2020, at Globe, Gila County, Arizona

Attest: **GILA COUNTY BOARD OF SUPERVISORS**

_____ _____

Marian Sheppard, Clerk of the Board Woody Cline, Chairman

Approved as to form:

_____

The Gila County Attorney's Office

When recorded return to:

Gila County Public Works Dept.
745 N. Rose Mofford Way
Globe, AZ 85501

QUIT CLAIM DEED

KNOW ALL MEN BY THESE PRESENTS: for the consideration of Ten Dollars ($10.00), and other valuable consideration, **GILA COUNTY, a BODY POLITIC,** does hereby release, devise, and forever quitclaim to **FREEPORT-MCMORAN MIAMI INC., a Delaware corporation,** all rights, title and interest in that certain Real Property situated in Gila County, State of Arizona, and legally described as follows:

See Exhibit "A" attached and made a part hereof

SUBJECT TO: Arizona Revised Statute § 28-7210 all Rights of way or easements of existing sewer, gas, water, or similar pipelines and appurtenances and for canals, laterals or ditches and appurtenances, and for electric, telephone, and similar lines and appurtenances shall continue as they existed prior to the disposal or vacation thereof.

Exempt per A. R. S. section 11-1134 A-3

Dated this _____ day of _____ 2020

Approved: Attest:

_____ _____
Woody Cline, Chairman Marian Sheppard, Clerk of the Board
Gila County Board of Supervisors

STATE OF (ARIZONA)
) ss.
COUNTY OF (GILA)

ACKNOWLEDGMENT

On this _____ day of _____, 2020, before me, the undersigned Notary Public, personally appeared Woody Cline, Chairman of the Gila County Board of Supervisors, and Marian Sheppard, Clerk of the Board, known to me to be the individuals who executed the foregoing instrument and acknowledged the same to be their free act and deed.

WITNESS my hand and official seal.

My Commission Expires: _____
Notary Public

HANSEN
ENGINEERING & SURVEYING
Professional Engineers & Surveyors
115 South Main Street
Coolidge, AZ 85128
520-723-3261
www.hansensurvey.com

QUALITY EXPERIENCE EXCELLENCE 40th 1979 ANNIVERSARY 2019

EXHIBIT "A"

LEGAL DESCRIPTION
PARCEL "B"

Those portions of New Street, Lot 10 in Block 20 and that certain alley lying northwesterly of Lot 10, all as shown on Miami Map No. 2 recorded as Plat 23, Official Records of Gila County, Arizona, being part of the Southeast quarter of the Southwest quarter of Section 20, Township 1 North, Range 15 East of the Gila and Salt River Base and Meridian, Gila County, Arizona, more particularly described as follows:

COMMENCING at a 2" pipe marking the Center-South Sixteenth corner of said Section 20, from which a 3/8" pin marking the South quarter corner of said Section 20 bears South 00°25'46" East a distance of 1344.10 feet, Thence from said Center-South Sixteenth corner South 00°25'46" East, a distance of 568.02 feet to the Southeast corner of Block "A" (Miami Map No.2), Thence South 44°55'07" West, a distance of 307.33 feet to a PK nail with washer RLS #37512 marking the Southwest corner of Block "A" (Miami Map No.2), Thence North 32°26'13" West along the Southwesterly boundary of Block "A" (Miami Map No.2), a distance of 26.87 feet to a point marking a corner of subject Parcel, THE POINT OF BEGINNING and the beginning of a non-tangent curve concave Northeasterly from which the radius point bears North 06°24'07" East, a distance of 106.10 feet:

Thence clockwise along said curve through a central angle of 51°42'44", an arc distance of 95.76 feet to a point marking a corner of subject Parcel;

Thence South 57°33'47" West, a distance of 15.44 feet to a point marking a corner of subject Parcel;

Thence North 32°26'13" West, parallel to and 5.00 feet Southwesterly of the centerline of "New Street", a distance of 145.78 feet to a point marking a corner of subject Parcel;

Thence South 57°33'47" West, in-alignment with the south boundary of Block 20 (Miami Map No.2) a distance of 63.50 feet to a point marking a corner of subject Parcel;

Thence North 32°26'13" West, parallel to and 68.50 feet Southwesterly of the centerline of "New Street", a distance of 71.40 feet to a point marking a corner of subject Parcel;

Thence North 72°27'47" East, along the Northwesterly boundary of Miami Map No.2, a distance of 122.62 feet to a PK nail with Washer RLS #37512 marking the Northwest corner of Block "A" (Miami Map No.2) and a corner of subject Parcel;

Thence South 32°26'13" East, along the Southwesterly boundary of Block "A" a distance of 269.32 feet to THE POINT OF BEGINNING.

Comprising an area of 16,928 S.F. more or less.

Subject to any existing easements.

Registered Land Surveyor
CERTIFICATE NO.
37512
TAYLOR S.
HANSEN
Date signed 05/04/2020
ARIZONA U.S.A.

ILLUSTRATION "A"
PARCEL "B"

LINE TABLE		
Line #	Length	Direction
L1	26.87'	N 32°26'13" W
L2	15.44'	S 57°33'47" W
L3	63.50'	S 57°33'47" W
L4	71.40'	N 32°26'13" W

C-S/16 COR SEC 20
2" PIPE PER (R3)
NW COR OF (R1) APPEARS TO BE 1.45'N X 0.28'E
(ORIGINAL PLAT DOES NOT STATE THIS SUBDIVISION CORNER TO BE THE C-S/16 SEC COR)
ALSO (R4) SHOWS THE MID SECTION LINE BEING DIFFERENT THAN THE WEST BOUNDARY OF (R1)

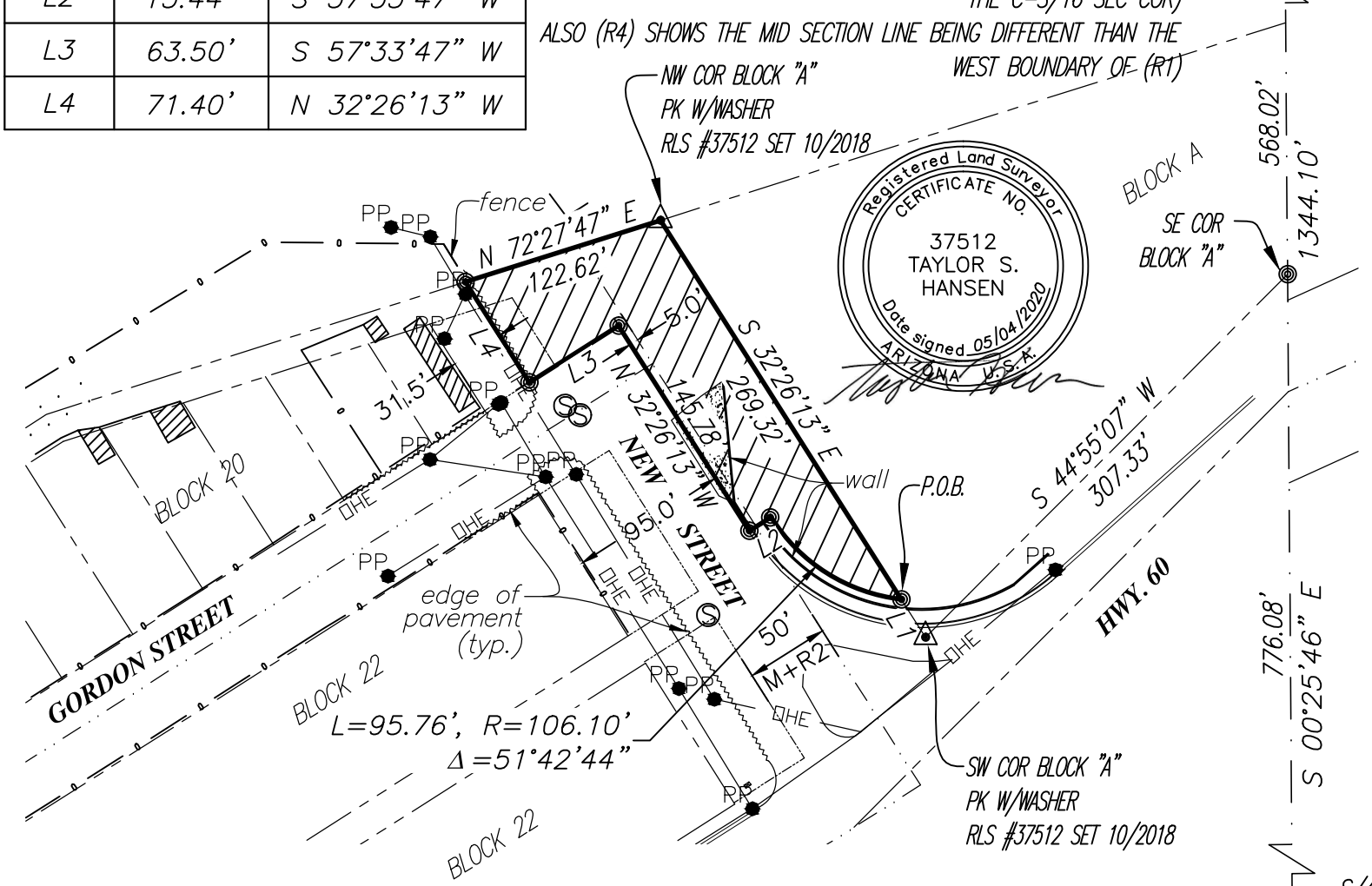

REFERENCE DOCUMENTS

R1 = "REVISED MIAMI MAP NO.1" (RECORDED GILA COUNTY PLAT #66 G.C.R.)

R2 = "MIAMI MAP NO.2" (RECORDED GILA COUNTY PLAT #23 G.C.R.)

R3 = GUERENA RLS #39198, ROS #4321 + #4322

R4 = GANT RLS #5703, ROS DATED NOV 3, 1967

UNRECORDED MAP OF SECTION 20, T1N, R15E, MAP NO: ICCCO-I-1520-B

RECORD OF SURVEY ROS 4990 G.C.R.

HANSEN
ENGINEERING & SURVEYING
115 S. MAIN ST
COOLIDGE, AZ. 85128
(520) 723-3261
WWW.HANSENSURVEY.COM

QUALITY EXPERIENCE EXCELLENCE 41st ANNIVERSARY 1979 2020

SURVEY #180072a REVIEW BY: TH SURVEY BY: MRL DRAWN BY: MPL

FMI MAIN GATE
SURVEY
GILA COUNTY, AZ

EXHIBIT	05/04/2020
	2 of 2

ARF-6278 **Consent Agenda Item 5. F.**

Regular BOS Meeting

Meeting Date: 10/06/2020
Submitted For: Eric Mariscal, Director
Submitted By: Erin Miller, Elections Assistant
Department: Elections

Information

Request/Subject

Resolution No. 20-10-06-Designating Emergency Voting Centers for the November 3, 2020 General Election.

Background Information

Arizona Revised Statute (A.R.S.) §16-411(B) provides that the Board of Supervisors may authorize the county recorder or other officer in charge of elections to use emergency voting centers. The resolution must specify the location and hours of operation of the emergency voting centers.

Evaluation

A.R.S. § 16-411 (B) (5) states, "*On a specific resolution of the board of supervisors that is limited to the specific election date and that is voted on by a recorded vote, the board may authorize the county recorder or other officer in charge of elections to use emergency voting centers. The Elections Director in coordination with the Gila County Recorder would like to establish emergency voting centers for the November 3, 2020, General Election. In order to do so, it requires the Board of Supervisors' approval by resolution*".

Conclusion

A resolution must be adopted by the Board of Supervisors in order to designate emergency voting centers for the November 3, 2020 General Election.

Recommendation

The Elections Director recommends that the Board of Supervisors adopt Resolution No. 20-10-06.

Suggested Motion

Adoption of Resolution No. 20-10-06 designating emergency voting centers for the November 3, 2020 General Election.

Attachments

Resolution No. 20-10-06

ARS 16-411

When recorded please send to

Marian Sheppard, BOS

RESOLUTION NO. 20-10-06

A RESOLUTION OF THE BOARD OF SUPERVISORS OF GILA COUNTY, ARIZONA, DESIGNATING EMERGENCY VOTING CENTERS FOR THE NOVEMBER 3, 2020 GENERAL ELECTION

WHEREAS, pursuant to A.R.S. § 16-411 (B) (5), the legislature has given authority for the Board of Supervisors to designate emergency voting centers; and,

WHEREAS, the designation of one or more emergency voting centers is to be made by specific resolution; and,

WHEREAS, on a specific resolution of the Board of Supervisors that is limited to a specific election date and that is voted on by a recorded vote, the Board may authorize the County Recorder or other officer in charge of elections to use emergency voting centers; and,

WHEREAS, the specific resolution must include the location and hours of operation of emergency voting centers;

NOW, THEREFORE, BE IT RESOLVED by the Gila County Board of Supervisors that the Gila County Elections Director shall make available emergency voting centers for the November 3, 2020 General Election at the following locations on Monday, November 2, 2020, from 8:00 a.m. until 5:00 p.m.: Gila County Courthouse, Board of Supervisors' Hearing Room, 1400 E. Ash Street, Globe, AZ and Gila County Complex, Board of Supervisors' Conference Room, 610 E. Highway 260, Payson, AZ.

PASSED AND ADOPTED this 6th day of October 2020.

Attest:

_____

Marian Sheppard, Clerk of the Board

GILA COUNTY BOARD OF SUPERVISORS

_____

Woody Cline, Chairman

Approved as to form:

_____

The Gila County Attorney's Office

16-411. Designation of election precincts and polling places; voting centers; electioneering; wait times

A. The board of supervisors of each county, on or before October 1 of each year preceding the year of a general election, by an order, shall establish a convenient number of election precincts in the county and define the boundaries of the precincts. The election precinct boundaries shall be so established as included within election districts prescribed by law for elected officers of the state and its political subdivisions including community college district precincts, except those elected officers provided for in titles 30 and 48.

B. Not less than twenty days before a general or primary election, and at least ten days before a special election, the board shall designate one polling place within each precinct where the election shall be held, except that:

1. On a specific finding of the board, included in the order or resolution designating polling places pursuant to this subsection, that no suitable polling place is available within a precinct, a polling place for that precinct may be designated within an adjacent precinct.

2. Adjacent precincts may be combined if boundaries so established are included in election districts prescribed by law for state elected officials and political subdivisions including community college districts but not including elected officials prescribed by titles 30 and 48. The officer in charge of elections may also split a precinct for administrative purposes. The polling places shall be listed in separate sections of the order or resolution.

3. On a specific finding of the board that the number of persons who are listed as permanent early voters pursuant to section 16-544 is likely to substantially reduce the number of voters appearing at one or more specific polling places at that election, adjacent precincts may be consolidated by combining polling places and precinct boards for that election. The board of supervisors shall ensure that a reasonable and adequate number of polling places will be designated for that election. Any consolidated polling places shall be listed in separate sections of the order or resolution of the board.

4. On a specific resolution of the board, the board may authorize the use of voting centers in place of or in addition to specifically designated polling places. A voting center shall allow any voter in that county to receive the appropriate ballot for that voter on election day after presenting identification as prescribed in section 16-579 and to lawfully cast the ballot. Voting centers may be established in coordination and consultation with the county recorder, at other county offices or at other locations in the county deemed appropriate.

5. On a specific resolution of the board of supervisors that is limited to a specific election date and that is voted on by a recorded vote, the board may authorize the county recorder or other officer in charge of elections to use emergency voting centers as follows:

(a) The board shall specify in the resolution the location and the hours of operation of the emergency voting centers.

(b) A qualified elector voting at an emergency voting center shall provide identification as prescribed in section 16-579, except that notwithstanding section 16-579, subsection A, paragraph 2, for any voting at an emergency voting center, the county recorder or other officer in charge of elections may allow a qualified elector to update the elector's voter registration information as provided for in the secretary of state's instructions and procedures manual adopted pursuant to section 16-452.

(c) If an emergency voting center established pursuant to this section becomes unavailable and there is not sufficient time for the board of supervisors to convene to approve an alternate location for that emergency voting center, the county recorder or other officer in charge of elections may make changes to the approved emergency voting center location and shall notify the public and the board of supervisors regarding that change as soon as practicable. The alternate emergency voting center shall be as close in proximity to the approved emergency voting center location as possible.

C. If the board fails to designate the place for holding the election, or if it cannot be held at or about the place designated, the justice of the peace in the precinct, two days before the election, by an order, copies of which the justice of the peace shall immediately post in three public places in the precinct, shall designate the place within the precinct for holding the election. If there is no justice of the peace in the precinct, or if the justice of the peace fails to do so, the election board of the precinct shall designate and give notice of the place within the precinct of holding the election. For any election in which there are no candidates for elected office appearing on the ballot, the board may consolidate polling places and precinct boards and may consolidate the tabulation of results for that election if all of the following apply:

1. All affected voters are notified by mail of the change at least thirty-three days before the election.

2. Notice of the change in polling places includes notice of the new voting location, notice of the hours for voting on election day and notice of the telephone number to call for voter assistance.

3. All affected voters receive information on early voting that includes the application used to request an early voting ballot.

D. The board is not required to designate a polling place for special district mail ballot elections held pursuant to article 8.1 of this chapter, but the board may designate one or more sites for voters to deposit marked ballots until 7:00 p.m. on the day of the election.

E. Except as provided in subsection F of this section, a public school shall provide sufficient space for use as a polling place for any city, county or state election when requested by the officer in charge of elections.

F. The principal of the school may deny a request to provide space for use as a polling place for any city, county or state election if, within two weeks after a request has been made, the principal provides a written statement indicating a reason the election cannot be held in the school, including any of the following:

1. Space is not available at the school.

2. The safety or welfare of the children would be jeopardized.

G. The board shall make available to the public as a public record a list of the polling places for all precincts in which the election is to be held.

H. Except in the case of an emergency, any facility that is used as a polling place on election day or that is used as an early voting site during the period of early voting shall allow persons to electioneer and engage in other political activity outside of the seventy-five foot limit prescribed by section 16-515 in public areas and parking lots used by voters. This subsection shall not be construed to permit the temporary or permanent construction of structures in public areas and parking lots or the blocking or other impairment of access to parking spaces for voters. The county recorder or other officer in

charge of elections shall post on its website at least two weeks before election day a list of those polling places in which emergency conditions prevent electioneering and shall specify the reason the emergency designation was granted and the number of attempts that were made to find a polling place before granting an emergency designation. If the polling place is not on the website list of polling places with emergency designations, electioneering and other political activity shall be permitted outside of the seventy-five foot limit. If an emergency arises after the county recorder or other officer in charge of elections' initial website posting, the county recorder or other officer in charge of elections shall update the website as soon as is practicable to include any new polling places, shall highlight the polling place location on the website and shall specify the reason the emergency designation was granted and the number of attempts that were made to find a polling place before granting an emergency designation.

I. For the purposes of this section, a county recorder or other officer in charge of elections shall designate a polling place as an emergency polling place and thus prohibit persons from electioneering and engaging in other political activity outside of the seventy-five foot limit prescribed by section 16-515 but inside the property of the facility that is hosting the polling place if any of the following occurs:

1. An act of God renders a previously set polling place as unusable.

2. A county recorder or other officer in charge of elections has exhausted all options and there are no suitable facilities in a precinct that are willing to be a polling place unless a facility can be given an emergency designation.

J. The secretary of state shall provide through the instructions and procedures manual adopted pursuant to section 16-452 the maximum allowable wait time for any election that is subject to section 16-204 and provide for a method to reduce voter wait time at the polls in the primary and general elections. The method shall consider at least all of the following for primary and general elections in each precinct:

1. The number of ballots voted in the prior primary and general elections.

2. The number of registered voters who voted early in the prior primary and general elections.

3. The number of registered voters and the number of registered voters who cast an early ballot for the current primary or general election.

4. The number of election board members and clerks and the number of rosters that will reduce voter wait time at the polls.

ARF-6277 **Consent Agenda Item 5. G.**

Regular BOS Meeting

Meeting Date: 10/06/2020
Submitted For: Eric Mariscal, Director
Submitted By: Erin Miller, Elections Assistant
Department: Elections

Information

Request/Subject

Adoption of an Order to Designate Polling Places and Appoint Poll Workers for the November 3, 2020, General Election.

Background Information

Arizona Revised Statute §16-411 provides that the Board of Supervisors shall designate polling places for each precinct.

Arizona Revised Statute §16-531 provides that the Board of Supervisors shall designate poll workers and election board workers.

Evaluation

Arizona Revised Statutes §16-411 and §16-531 require the adoption of this Order.

Conclusion

An Order must be adopted by the Board of Supervisors in order to designate polling places and appoint poll workers and the election board workers within Gila County.

Recommendation

The Elections Director recommends that the Board of Supervisors adopt this Order.

Suggested Motion

Adoption of an Order designating polling places and the appointment of poll workers and election board workers for the purpose of conducting the November 3, 2020 General Election.

Attachments

Order
ARS 16-411
ARS 16-531

ORDER

AN ORDER OF THE GILA COUNTY BOARD OF SUPERVISORS DESIGNATING POLLING PLACES WITHIN EACH ELECTION PRECINCT AND APPOINTING POLL WORKERS AND ELECTION BOARD WORKERS FOR THE GENERAL ELECTION TO BE HELD ON NOVEMBER 3, 2020.

WHEREAS, A.R.S. §16-411(B) states*, "Not less than twenty days before a general or primary election, and at least ten days before a special election, the board shall designate one polling place within each precinct where the election shall be held, except that:*
1. On a specific finding of the board, included in the order or resolution designating polling places pursuant to this subsection, that no suitable polling place is available within a precinct, a polling place for that precinct may be designated within an adjacent precinct.
2. Adjacent precincts may be combined if boundaries so established are included in election districts prescribed by law for state elected officials and political subdivisions including community college districts but not including elected officials prescribed by titles 30 and 48. The officer in charge of elections may also split a precinct for administrative purposes. The polling places shall be listed in separate sections of the order or resolution.
3. On a specific finding of the board that the number of persons who are listed as permanent early voters pursuant to section 16-544 is likely to substantially reduce the number of voters appearing at one or more specific polling places at that election, adjacent precincts may be consolidated by combining polling places and precinct boards for that election. The board of supervisors shall ensure that a reasonable and adequate number of polling places will be designated for that election. Any consolidated polling places shall be listed in separate sections of the order or resolution of the board.";
4. On a specific resolution of the board, the board may authorize the use of voting centers in place of or in addition to specifically designated polling places. A voting center shall allow any voter in that county to receive the appropriate ballot for that voter on election day after presenting identification as prescribed in section 16-579 and to lawfully cast the ballot. Voting centers may be established in coordination and consultation with the county recorder, at other county offices or at other locations in the county deemed appropriate.

WHEREAS, A.R.S. §16-531(A) states, *"When an election is ordered, and not less than twenty days before a general or primary election, the board of supervisors shall appoint for each election precinct one inspector, one marshal, two judges and as many clerks of election as deemed necessary. The inspector, marshal, judges and clerks shall be qualified voters of the precinct for which appointed, unless there is not a sufficient number of persons available to provide the number of appointments required. The inspector, marshal and judges shall not have*

changed their political party affiliation or their no party preference affiliation since the last preceding general election, and if they are members of the two political parties that cast the highest number of votes in the state at the last preceding general election, they shall be divided equally between these two parties. There shall be an equal number of inspectors in the various precincts in the county who are members of the two largest political parties. In each precinct where the inspector is a member of one of the two largest political parties, the marshal in that precinct shall be a member of the other of the two largest political parties. Whenever possible, any person appointed as an inspector shall have had previous experience as an inspector, judge, marshal or clerk of elections. If there is no qualified person in a given precinct, the appointment of an inspector may be made from names provided by the county party chairman. If not less than ninety days before the election the chairman of the county committee of either of the parties designates qualified voters of the precinct, or of another precinct if there are not sufficient members of his party available in the precinct to provide the necessary representation on the election board as judge, such designated qualified voters shall be appointed. The judges, together with the inspector, shall constitute the board of elections. Any registered voter in the election precinct, or in another election precinct if there are not sufficient persons available in the election precinct for which the clerks are being appointed, may be appointed as clerk.";

PASSED AND ADOPTED this 6th day of October 2020, at Globe, Gila County, Arizona

Attest: **GILA COUNTY BOARD OF SUPERVISORS**

_____ _____

Marian Sheppard, Clerk of the Board Woody Cline, Chairman

Approved as to form:

_____

The Gila County Attorney's Office

ORDER - ATTACHMENT A

GILA COUNTY POLLING PLACES AND VOTE CENTER LOCATIONS

Pursuant to the provisions of A.R.S. §16-411(B), the following locations have been designated as polling places or vote centers for 2020 elections held in Gila County.

Vote Center – A polling location in which any voter may receive an appropriate ballot for that voter on Election Day and lawfully cast their ballot.

- **Gila County has 6 vote centers. ANY registered voter may vote at any of the vote centers.**
- **Gila County has 11 precinct specific polling sites; voters must be registered in those precincts in order to cast a valid ballot.**
- **Polling place/vote centers are open from 6:00 a.m. to 7:00 p.m. on Election Day.**

Polling Place or Vote Center	Location of Election Precinct or Vote Center
Globe Vote Center	Pinal Mountain AZ #2809 Elks Lodge, 1919 E Maple Street, Globe
Miami Vote Center	Miami High School, 4739 S Ragus Road, Miami
Payson Vote Center #1	Expedition Church, 302 S Ash Street, Payson
Payson Vote Center #2	Church of the Nazarene, 200 E Tyler Parkway, Payson
Payson Vote Center #3	Mt. Cross Lutheran Church, 601 E Hwy 260, Payson
Star Valley Vote Center	Rim View Community Church, 4180 E Hwy. 260, Star Valley
Copper Basin	Hayden-Winkelman School, 824 Thorne Ave, Winkelman
Gisela	Tonto Valley Bible Church, 526 S Valley View Rd, Gisela
Pine-Strawberry East & Pine-Strawberry West	First Baptist Church of Pine, 4039 N hwy. 87, Pine
Roosevelt & Sierra Ancha	Roosevelt Baptist Church, 18659 Hwy. 188, Roosevelt
Tonto Basin	Tonto Basin Chamber of Commerce, 45675 Hwy. 188, Tonto Basin
Whispering Pines	East Verde Baptist Church, 11209 N Houston Mesa Road, Whispering Pines
Young	Pleasant Valley Community Center, Hwy. 288, Young
Zane Grey	Christopher Creek Bible Fellowship Church, 1036 E Christopher Creek Loop, Christopher Creek
Canyon Day	Canyon Day Jr. High School Library, 4621 S 9th Street, Cedar Creek
Carrizo	Carrizo Assembly of God Church, V-10 Road, Carrizo
San Carlos	Rice Elementary School Gym, Mohave Avenue and Yavapai Street, San Carlos

ORDER - ATTACHMENT B

GILA COUNTY POLLING PLACES AND APPOINTED POLL WORKERS AND ELECTION BOARD WORKERS FOR THE GENERAL ELECTION TO BE HELD ON NOVEMBER 3, 2020.

Polling Place or Vote Center	Name of Poll Worker or Election Board Worker	Position of Poll Worker or Election Board Worker
Globe Vote Center	Belarde, Estelle	Inspector
Globe Vote Center	Campos, Patricia	Co-Inspector
Globe Vote Center	Alexander, Dan	I.D. Clerk
Globe Vote Center	Campos, Antonella	I.D. Clerk
Globe Vote Center	Palm, Samantha	Provisional Clerk
Globe Vote Center	Milliman, Nelson	Provisional Clerk
Globe Vote Center	Joslin, William	Marshal
Globe Vote Center	Rogers, Linda	Marshal
Globe Vote Center	Olson, Dylan	Elections Day Technician
Globe Vote Center	Beaver, Larry	Ballot Judge
Globe Vote Center	Palm, Samantha	Ballot Judge
Miami Vote Center	Flowers, Rebecca	Inspector
Miami Vote Center	Garlinghouse, Leon	Ballot Judge
Miami Vote Center	Camacho, Dalile	Ballot Judge
Miami Vote Center	Porter, Peggy	Provisional Clerk
Miami Vote Center	Hamill, Peni	Provisional Clerk
Miami Vote Center	Rasmussen, James	Marshal
Miami Vote Center	Barsness, Greg	Marshal
Miami Vote Center	Downer, Ben	I.D. Clerk
Miami Vote Center	Martin, Christine	I.D. Clerk
Tonto Basin	Jackson, Barbara	Inspector
Tonto Basin	Gassaway, Nancy	Ballot Judge
Tonto Basin	Cunningham, Debbi	I.D. Clerk
Tonto Basin	Randall, Christyne	Provisional Clerk
Payson Vote Center #1	Dalby, Bob	Inspector
Payson Vote Center #1	Stroud, Barbara	I.D. Clerk
Payson Vote Center #1	Medina, Jerri	I.D. Clerk
Payson Vote Center #1	Dalby, Wilma	Provisional Clerk
Payson Vote Center #1	Barnes, Bruce	Marshal
Payson Vote Center #1	Fleming, Ruth	Ballot Judge
Payson Vote Center #1	Barnes, Cynthia	Ballot Judge
Payson Vote Center #1	Julkes, Bettie	Provisional Clerk
Payson Vote Center #2	Miller, Frances	Ballot Judge
Payson Vote Center #2	Schwenk, Lynda	Provisional Clerk

Payson Vote Center #2	**Everett, Debbie**	**Ballot Judge**
Payson Vote Center #2	**Ryan, Pamela**	**I.D. Clerk**
Payson Vote Center #2	**Ardt, Doug**	**Co-Inspector**
Payson Vote Center #2	**Shafferkoetter, Judy**	**Inspector**
Payson Vote Center #2	**Thompson, Cathrine**	**Provisional Clerk**
Payson Vote Center #2	**Holmes, Margaret**	**I.D. Clerk**
Payson Vote Center #2		**Marshal**
Payson Vote Center #3	**Rowe, Maryann**	**Inspector**
Payson Vote Center #3	**Younker, Darlene**	**Ballot Judge**
Payson Vote Center #3	**Martin, Doris**	**Provisional Clerk**
Payson Vote Center #3	**Kealoha, Teresa**	**Marshal**
Payson Vote Center #3	**Belcher, Tom**	**Marshal**
Payson Vote Center #3	**Newell, Barbara**	**I.D. Clerk**
Payson Vote Center #3	**Ennen, Virginia**	**Provisional Clerk**
Payson Vote Center #3	**Boone, Cathy**	**I.D. Clerk**
Payson Vote Center #3	**Thieme, Starr**	**Ballot Judge**
Star Valley Vote Center		**Inspector**
Star Valley Vote Center	**Flower, William**	**Ballot Judge**
Star Valley Vote Center	**Miller, Anne**	**I.D. Clerk**
Star Valley Vote Center	**Larrigan, Richard**	**Ballot Judge**
Star Valley Vote Center	**Weintraut, Phillip**	**Provisional Clerk**
Star Valley Vote Center	**Herzog, Judy**	**Provisional Clerk**
Star Valley Vote Center	**Paulus, Gayle**	**ID Clerk**
Star Valley Vote Center	**McCrary, Linda**	**Marshal**
Star Valley Vote Center	**Van Keuren, Denise**	**Marshal**
Pine-Strawberry	**Dwyer, Herb**	**Inspector**
Pine-Strawberry	**Juniper, Vanessa**	**I.D. Clerk**
Pine-Strawberry	**Figueroa, Joe**	**Marshal**
Pine-Strawberry	**Mortenson, Marvin**	**Marshal**
Pine-Strawberry	**Underhill, Charlene**	**I.D. Clerk**
Pine-Strawberry	**Getting, Deborah**	**Provisional Clerk**
Pine-Strawberry	**Cockrell, Connie**	**Provisional Clerk**
Pine-Strawberry	**Mortenson, Charlotte**	**Ballot Judge**
Zane Grey	**Britian, Rodney**	**Inspector**
Zane Grey	**Egler, Silvanus**	**Ballot Judge**
Zane Grey	**Oliver, Jim**	**I.D. Clerk**
Zane Grey	**Tolle, Judy**	**Provisional Clerk**
Young	**McKinney, Mike**	**Inspector**
Young	**Corvinus, Howard**	**Ballot Judge**
Young	**Schiedewind, Kathrine**	**I.D. Clerk**
Young	**Williams, Ed**	**Provisional Clerk**
Young	**Varker, Judi**	**Marshal**
Whispering Pines	**Jones, Lois**	**Inspector**
Whispering Pines	**Jones, Bobby**	**Ballot Judge**
Whispering Pines	**Bullock, Sheila**	**I.D. Clerk**

Whispering Pines	**Bullock, Leonard**	**Marshal**
Whispering Pines	**Dye, Shirley**	**Provisional Clerk**
Gisela	**Kirch, Mark**	**Inspector**
Gisela	**Rodgers, Donna**	**Ballot Judge**
Gisela		**Provisional Clerk**
Gisela	**Mathis, Kay**	**I.D. Clerk**
Gisela	**Orear, Fran**	**Marshal**
Copper Basin	**Annie Hinojos**	**Inspector**
Copper Basin	**Lovins, Maryann**	**Ballot Judge**
Copper Basin	**Hinojos, Daniel**	**Marshal**
Copper Basin	**Garcia, Jose Luis**	**I.D. Clerk**
Copper Basin		**Provisional Clerk**
Copper Basin		**Ballot Judge**
Canyon Day	**Burnette, Sr., Vino**	**Inspector**
Canyon Day	**Lupe, Shanda**	**Ballot Judge**
Canyon Day	**Pope, U'breka**	**I.D. Clerk**
Canyon Day	**Thompson, Lee**	**Provisional Clerk**
Canyon Day	**Thompson, Sr., Elton**	**Marshal**
Carrizo	**Gooday, Rosie-Anna**	**Inspector**
Carrizo	**Truax, Larue**	**Ballot Judge**
Carrizo	**Brewer, Jeralyn**	**I.D. Clerk/Signature Judge**
Carrizo	**Foster, Rosie**	**Poll List Clerk**
San Carlos	**Stevens, Esther**	**Inspector**
San Carlos	**Starr, Edith**	**Co-Inspector**
San Carlos	**Irving, Shari**	**I.D. Clerk**
San Carlos	**Key, Brenda**	**Ballot Judge**
San Carlos	**Polk Jr., Elbert**	**Provisional Clerk**
San Carlos		**ID Clerk**
San Carlos		**Marshal**
San Carlos	**Thompson, Lindsey**	**Provisional Clerk**
Roosevelt-Sierra Ancha	**Holt, Robin**	**Inspector**
Roosevelt-Sierra Ancha	**Bailey, Randy**	**Marshal**
Roosevelt-Sierra Ancha	**Holt, Roxie**	**Ballot Judge**
Roosevelt-Sierra Ancha		**I.D. Clerk**
Roosevelt-Sierra Ancha	**Cole, Sarah**	**Provisional Clerk**

ORDER - ATTACHMENT C

ELECTION WORKERS

Election Responsibility	Name
Accuracy & Certification	Alvarez, Alfonzo
Accuracy & Certification	Broeder, Carol
Accuracy & Certification	Mariscal, Eric
Audit/Hand Count	Alvarez, Alfonso
Audit/Hand Count	Broeder, Carol
Audit/Hand Count	Mariscal, Eric
Audit/Hand Count	Miller, Erin
Data Processing	Alvarez, Alfonzo
Data Processing	Miller, Erin
Data Processing	Broeder, Carol
Data Processing	Mariscal, Eric
Early Board	Broeder, Chuck
Early Board	Broeder, Carol
Early Board	Gabrielle, Cecelia
Early Board	Skamel, Joe
Early Board	Mundy, Dixie
Early Board	Miller, Erin
Early Board	Bengtson, Randy
Early Board	Rogers, Tom
Early Board	Againeses, Shirley
Interpreters	Amaya, Marcela
Interpreters	Alvarez, Alfonzo
Night Board	Sluyter, Cheryl
Night Board	Gabrielle, Cecelia
Night Board	Mariscal, Cheryle
Night Board	Rogers, Olga
Night Board	Rogers, Tom
Night Board	Mundy, Dixie
Night Board	Bengston, Randy
Pick-up Transportation	Sheriffs Posse Personnel
Pick-up Transportation	
Pick-up Transportation	
Pick-up Transportation	
Pick-up Transportation	
Pick-up Transportation	
Pick-up Transportation	
Pick-up Transportation	
Pick-up Transportation	
Pick-up Transportation	

Pick-up Transportation	
Pick-up Transportation	
Pick-up Transportation	
Pick-up Transportation	
Snag	**Dalton, Jeff**
Snag	**Mariscal, Eric**
Snag	**Menlove, James**
Trouble Shooters	**Alvarez, Alfonso**
Trouble Shooters	**Baer, Jeff**
Trouble Shooters	**Miller, Erin**
Trouble Shooters	**Modglin, Lisa**
Trouble Shooters	**Mariscal, Eric**
Trouble Shooters	**Hicks, Shane**

16-411. Designation of election precincts and polling places; voting centers; electioneering; wait times

A. The board of supervisors of each county, on or before October 1 of each year preceding the year of a general election, by an order, shall establish a convenient number of election precincts in the county and define the boundaries of the precincts. The election precinct boundaries shall be so established as included within election districts prescribed by law for elected officers of the state and its political subdivisions including community college district precincts, except those elected officers provided for in titles 30 and 48.

B. Not less than twenty days before a general or primary election, and at least ten days before a special election, the board shall designate one polling place within each precinct where the election shall be held, except that:

1. On a specific finding of the board, included in the order or resolution designating polling places pursuant to this subsection, that no suitable polling place is available within a precinct, a polling place for that precinct may be designated within an adjacent precinct.

2. Adjacent precincts may be combined if boundaries so established are included in election districts prescribed by law for state elected officials and political subdivisions including community college districts but not including elected officials prescribed by titles 30 and 48. The officer in charge of elections may also split a precinct for administrative purposes. The polling places shall be listed in separate sections of the order or resolution.

3. On a specific finding of the board that the number of persons who are listed as permanent early voters pursuant to section 16-544 is likely to substantially reduce the number of voters appearing at one or more specific polling places at that election, adjacent precincts may be consolidated by combining polling places and precinct boards for that election. The board of supervisors shall ensure that a reasonable and adequate number of polling places will be designated for that election. Any consolidated polling places shall be listed in separate sections of the order or resolution of the board.

4. On a specific resolution of the board, the board may authorize the use of voting centers in place of or in addition to specifically designated polling places. A voting center shall allow any voter in that county to receive the appropriate ballot for that voter on election day after presenting identification as prescribed in section 16-579 and to lawfully cast the ballot. Voting centers may be established in coordination and consultation with the county recorder, at other county offices or at other locations in the county deemed appropriate.

5. On a specific resolution of the board of supervisors that is limited to a specific election date and that is voted on by a recorded vote, the board may authorize the county recorder or other officer in charge of elections to use emergency voting centers as follows:

(a) The board shall specify in the resolution the location and the hours of operation of the emergency voting centers.

(b) A qualified elector voting at an emergency voting center shall provide identification as prescribed in section 16-579, except that notwithstanding section 16-579, subsection A, paragraph 2, for any voting at an emergency voting center, the county recorder or other officer in charge of elections may allow a qualified elector to update the elector's voter registration information as provided for in the secretary of state's instructions and procedures manual adopted pursuant to section 16-452.

(c) If an emergency voting center established pursuant to this section becomes unavailable and there is not sufficient time for the board of supervisors to convene to approve an alternate location for that emergency voting center, the county recorder or other officer in charge of elections may make changes to the approved emergency voting center location and shall notify the public and the board of supervisors regarding that change as soon as practicable. The alternate emergency voting center shall be as close in proximity to the approved emergency voting center location as possible.

C. If the board fails to designate the place for holding the election, or if it cannot be held at or about the place designated, the justice of the peace in the precinct, two days before the election, by an order, copies of which the justice of the peace shall immediately post in three public places in the precinct, shall designate the place within the precinct for holding the election. If there is no justice of the peace in the precinct, or if the justice of the peace fails to do so, the election board of the precinct shall designate and give notice of the place within the precinct of holding the election. For any election in which there are no candidates for elected office appearing on the ballot, the board may consolidate polling places and precinct boards and may consolidate the tabulation of results for that election if all of the following apply:

1. All affected voters are notified by mail of the change at least thirty-three days before the election.

2. Notice of the change in polling places includes notice of the new voting location, notice of the hours for voting on election day and notice of the telephone number to call for voter assistance.

3. All affected voters receive information on early voting that includes the application used to request an early voting ballot.

D. The board is not required to designate a polling place for special district mail ballot elections held pursuant to article 8.1 of this chapter, but the board may designate one or more sites for voters to deposit marked ballots until 7:00 p.m. on the day of the election.

E. Except as provided in subsection F of this section, a public school shall provide sufficient space for use as a polling place for any city, county or state election when requested by the officer in charge of elections.

F. The principal of the school may deny a request to provide space for use as a polling place for any city, county or state election if, within two weeks after a request has been made, the principal provides a written statement indicating a reason the election cannot be held in the school, including any of the following:

1. Space is not available at the school.

2. The safety or welfare of the children would be jeopardized.

G. The board shall make available to the public as a public record a list of the polling places for all precincts in which the election is to be held.

H. Except in the case of an emergency, any facility that is used as a polling place on election day or that is used as an early voting site during the period of early voting shall allow persons to electioneer and engage in other political activity outside of the seventy-five foot limit prescribed by section 16-515 in public areas and parking lots used by voters. This subsection shall not be construed to permit the temporary or permanent construction of structures in public areas and parking lots or the blocking or other impairment of access to parking spaces for voters. The county recorder or other officer in

charge of elections shall post on its website at least two weeks before election day a list of those polling places in which emergency conditions prevent electioneering and shall specify the reason the emergency designation was granted and the number of attempts that were made to find a polling place before granting an emergency designation. If the polling place is not on the website list of polling places with emergency designations, electioneering and other political activity shall be permitted outside of the seventy-five foot limit. If an emergency arises after the county recorder or other officer in charge of elections' initial website posting, the county recorder or other officer in charge of elections shall update the website as soon as is practicable to include any new polling places, shall highlight the polling place location on the website and shall specify the reason the emergency designation was granted and the number of attempts that were made to find a polling place before granting an emergency designation.

I. For the purposes of this section, a county recorder or other officer in charge of elections shall designate a polling place as an emergency polling place and thus prohibit persons from electioneering and engaging in other political activity outside of the seventy-five foot limit prescribed by section 16-515 but inside the property of the facility that is hosting the polling place if any of the following occurs:

1. An act of God renders a previously set polling place as unusable.

2. A county recorder or other officer in charge of elections has exhausted all options and there are no suitable facilities in a precinct that are willing to be a polling place unless a facility can be given an emergency designation.

J. The secretary of state shall provide through the instructions and procedures manual adopted pursuant to section 16-452 the maximum allowable wait time for any election that is subject to section 16-204 and provide for a method to reduce voter wait time at the polls in the primary and general elections. The method shall consider at least all of the following for primary and general elections in each precinct:

1. The number of ballots voted in the prior primary and general elections.

2. The number of registered voters who voted early in the prior primary and general elections.

3. The number of registered voters and the number of registered voters who cast an early ballot for the current primary or general election.

4. The number of election board members and clerks and the number of rosters that will reduce voter wait time at the polls.

16-531. Appointment of election boards; qualifications

A. When an election is ordered, and not less than twenty days before a general or primary election, the board of supervisors shall appoint for each election precinct one inspector, one marshal, two judges and as many clerks of election as deemed necessary. The inspector, marshal, judges and clerks shall be qualified voters of the precinct for which appointed, unless there is not a sufficient number of persons available to provide the number of appointments required. The inspector, marshal and judges shall not have changed their political party affiliation or their no party preference affiliation since the last preceding general election, and if they are members of the two political parties that cast the highest number of votes in the state at the last preceding general election, they shall be divided equally between these two parties. There shall be an equal number of inspectors in the various precincts in the county who are members of the two largest political parties. In each precinct where the inspector is a member of one of the two largest political parties, the marshal in that precinct shall be a member of the other of the two largest political parties. Whenever possible, any person appointed as an inspector shall have had previous experience as an inspector, judge, marshal or clerk of elections. If there is no qualified person in a given precinct, the appointment of an inspector may be made from names provided by the county party chairman. If not less than ninety days before the election the chairman of the county committee of either of the parties designates qualified voters of the precinct, or of another precinct if there are not sufficient members of his party available in the precinct to provide the necessary representation on the election board as judge, such designated qualified voters shall be appointed. The judges, together with the inspector, shall constitute the board of elections. Any registered voter in the election precinct, or in another election precinct if there are not sufficient persons available in the election precinct for which the clerks are being appointed, may be appointed as clerk.

B. If the election precinct consists of fewer than three hundred qualified electors, the board of supervisors may appoint not fewer than one inspector and two judges. The board of supervisors shall give notice of election precincts consisting of fewer than three hundred qualified electors to the county chairmen of the two largest political parties not later than thirty days before the election. The inspector and judges shall be appointed in the same manner by party as provided in subsection A of this section.

C. If a nonpartisan election is ordered, not less than twenty days before the election the governing board holding the election shall appoint, without consideration for political party, a minimum of three election workers for each polling place. The election workers shall consist of at least one inspector and two judges. Whenever possible, they shall be qualified electors of the precinct located within the district, without consideration for political party.

D. For election boards established pursuant to subsection B of this section, the inspector and two judges shall be appointed to provide as equal as practicable representation of members of the two largest political parties on the board in the same manner as provided for the election boards prescribed by subsection A of this section. Any registered voter in the election precinct, or in another election precinct if there are not sufficient persons available in the election precinct for which the clerks are being appointed, may be appointed as clerk. No United States, state, county or precinct officer, nor a candidate for office at the election, other than a precinct committeeman or a candidate for the office of precinct committeeman, is qualified to act as judge, inspector, marshal or clerk.

E. If an electronic voting system is in use the write-in ballots shall be tallied by a board of elections consisting of one inspector and two judges who are appointed in the same manner by party as provided in subsection A of this section.

F. Notwithstanding any other law, the board of supervisors may appoint to an election board to serve as a clerk of election a person who is not eligible to vote if all of the following conditions are met:

1. The person is a minor who will be at least sixteen years of age at the time of the election for which the person is named to the election board.

2. The person is a citizen of the United States at the time of the election for which the person is named to the election board.

3. The person is supervised by an adult who has been trained as an elections officer.

4. The person has received training provided by the officer in charge of elections.

5. The parent or guardian of the person has provided written permission for the person to serve.

G. A school district or charter school shall not be required to reduce its average daily membership, as defined in section 15-901, for any pupil who is absent from one or more instructional programs as a result of the pupil's service on an election board pursuant to subsection F of this section.

H. A school district or charter school shall not count any pupil's absence from one or more instructional programs as a result of the pupil's service on an election board pursuant to subsection F of this section against any mandatory attendance requirements for the pupil.

I. Nothing in this section shall prevent the board of supervisors or governing body from refusing for cause to reappoint, or from removing for cause, an election board member.

ARF-6251 **Consent Agenda Item** **5. H.**

Regular BOS Meeting

Meeting Date: 10/06/2020
Submitted For: Marian Sheppard, Clerk of the Board
Submitted By: Melissa Henderson, Deputy Clerk
Department: Clerk of the Board of Supervisors

Information

Request/Subject

Quit Claim Deed for Sale of Assessor's Tax Parcel Number 206-10-001.

Background Information

On May 26, 2015, the Board of Supervisors adopted Resolution No. 15-05-05 which outlines the policy and procedures for the sale of land held by the State of Arizona under tax deed. The procedures allow the Clerk of the Board to sell these parcels over the counter for the total lien amount. A separate $30 fee is required to be paid by the purchaser to record the Quit Claim Deed. The procedures also state that a consent agenda action item will be submitted to the Board of Supervisors on a Regular Meeting agenda to obtain authorization from the Board for the Chairman's signature on the Quit Claim Deed.

Assessor's tax parcel number 206-10-001 was deeded to the State of Arizona c/o Board of Supervisors on July 21, 2016, with a total lien amount of $3,661.76. It was advertised for sale at the Board's annual auction which was held in December 2016; however, it did not sell. It was added to a list of available properties that could be purchased year-round for the total lien amount.

Evaluation

On September 4, 2020, the Clerk of the Board sold the subject parcel to Abelardo Andre Gil for the lien amount of $3,661.76. Said payment was deposited with the County Treasurer on September 4, 2020. A separate payment of $30 was made to record the Quit Claim Deed. Once the deed has been finalized and recorded, the property will go back on the County's tax rolls.

Mr. Gil wants to purchase the subject parcel to renovate the house on the property.

Conclusion

The Board of Supervisors needs to authorize the Chairman's signature on the Quit Claim Deed to finalize the sale of Assessor's tax parcel number 206-10-001 to Abelardo Andre Gil.

Recommendation

The Clerk of the Board recommends that the Board of Supervisors authorize the Chairman's signature on a Quit Claim Deed to finalize the sale of Assessor's tax parcel number 206-10-001 to Abelardo Andre Gil.

Suggested Motion

Authorization of the Chairman's signature on the Quit Claim Deed for the Clerk of the Board's over-the-counter sale of Assessor's tax parcel number 206-10-001 to Abelardo Andre Gil.

Attachments

206-10-001 QCD

206-10-001 Info and Map

When recorded return to:
Marian Sheppard, Clerk
Gila County Board of Supervisors

GILA COUNTY QUIT-CLAIM DEED

THIS QUIT CLAIM DEED, made this day 6th day of October 2020, between the State of Arizona, by and through the Gila County Board of Supervisors, Grantor, and Abelardo Andre Gil, Grantee.

Address of Grantee: 2234 N. 22nd Place, Phoenix, AZ 85006

RECITALS

WHEREAS, the real property hereinafter described was conveyed to the State of Arizona by Treasurer's Deed for the non-payment of taxes, which taxes had been legally assessed against, and became a lien upon, said property according to law; and

WHEREAS, the Gila County Board of Supervisors, on behalf of the State of Arizona, advertised and offered said property for sale to the highest bidder for cash in accordance with A.R.S. §42-18302 and 42-18303; and

WHEREAS, on the 4th day of September 2020, Grantee did purchase said property for the sum of Three Thousand Six Hundred Sixty-One Dollars and Seventy-Six Cents ($3,661.76);

NOW, THEREFORE, in consideration of the premises, Grantor does hereby quit-claim to Grantee, the following described real property situated in the County of Gila, State of Arizona.

Assessor's Tax Parcel Number: 206-10-001

Legal Description:

TOWNSHIP: 001 EAST MIAMI TWNS PUERTO RICO SUBLOT 1A BLK 1

Exempt from Affidavit of Property Value pursuant to A.R.S. §11-1134 (A) (3)

Grantor:

_____
Woody Cline, Chairman
Gila County Board of Supervisors

Attest:

_____
Marian Sheppard, Clerk
Gila County Board of Supervisors

STATE OF ARIZONA)
) SS **ACKNOWLEDGEMENT**
COUNTY OF GILA)

Before me, Melissa Henderson, a Notary Public in and for the County of Gila, State of Arizona, on this 6th day of October 2020, personally appeared Woody Cline, Chairman, Board of Supervisors, Gila County, Arizona, known to me to be the person whose name is subscribed to the foregoing instrument and acknowledged to me that he executed the same for the purpose and consideration therein expressed.

_____
Notary Public
My Commission Expires:

2016-006642 TD Page: 1 of 1
07/21/2016 11:19:47 AM Receipt #: 16-5206
Rec Fee: $0 Gila County Treasurers Office
Gila County, Az, Sadie Jo Bingham, Recorder

WHEN RECORDED RETURN TO:
GILA COUNTY TREAS.

TREASURER'S DEED
A.R.S. 42-18267

KNOW ALL MEN BY THESE PRESENTS:

WHEREAS, on the **11 th** day of **May, 2016** notice according to law was published in the **Arizona Silver Belt** , a newspaper of general circulation in the County of Gila, State of Arizona, that application for a Treasurer's Deed to the premises hereinafter described had been made by the grantee named herein, and that unless the tax lien is redeemed before the **30 th** day of **June**, **2016**, a Treasurer's Deed will issue to the said grantee, and

WHEREAS, said property tax lien not having been redeemed from such sale, I therefore, pursuant to said notice and in conformity with law have conveyed, and do hereby foreclose the right to redeem and convey, unto said **STATE OF ARIZONA** , the following described premises situated in the County of Gila, State of Arizona, to-wit:

PARCEL NUMBER : **20610001** ACCOUNT NUMBER: **R006745**

DESCRIBED AS : **Township: 001 EAST MIAMI TWNS PUERTO RICO SUBLOT 1A BLK 1**

IN WITNESS WHEREOF, I, **Debora Savage** , Treasurer of the County of Gila, State of Arizona, by virtue of law, have hereunto set my hand and seal this **21 st** day of **JULY, 2016** .

Debora Savage
Treasurer of Gila County

SEAL

STATE OF ARIZONA
COUNTY OF GILA

This instrument was acknowledged before me this **21 st** day of **JULY ,2016** by **Debora Savage** as Treasurer of the County of Gila, State of Arizona, who then and there stated to me that **SHE** executed the same for the purpose and consideration therein expressed.

PEGGY DENISE COX
Notary Public - Arizona
Gila County
My Comm. Expires Jan 21, 2018

Peggy Denise Cox
Notary Public
My Commission Expires: 1-21-2018

6055 S. Puerto Rico Avenue
Claypool
(area where shed is located)

ADVERTISE FOR TWO CONSECUTIVE WEEKS
A.R.S. 42-18265

TREASURER'S OFFICE

Gila County, Arizona

March 28, 2016

Notice is hereby given that **STATE OF ARIZONA** has applied for a Treasurer's Deed to the following described real property owned by:

HARVEY CLARA J

and situated in Gila County, Arizona:
PARCEL # 20610001 ACCOUNT # R006745

Legal Description: Township: 001 EAST MIAMI TWNS PUERTO RICO SUBLOT 1A BLK 1

which on **17 th day of February , 2011** was sold to **STATE OF ARIZONA**

for taxes, interest and penalties and charges amounting to
$ **3611.76**
as represented in Tax Sale Certificate No**. 11034195**

If redemption according to law be not made before the **30 th day of June, 2016** .

I will convey said premises unless the property is redeemed before the stated date a treasurer's deed will be executed and delivered to the county board of supervisors acting on behalf of this state.

$3,611.76
50.00 Clerk's fee
$3,661.76

Debora Savage
Treasurer of Gila County, Arizona

THIS PROPERTY IS SUBJECT TO FORECLOSURE FOR DELINQUENT TAXES

206-10-001

Notice is hereby given that **STATE OF ARIZONA** has applied for a Treasurer's Deed to the following described real property owned by:

HARVEY CLARA J

and situated in Gila County, Arizona:
PARCEL # 20610001 ACCOUNT # R006745

Legal Description: Township: 001 EAST MIAMI TWNS PUERTO RICO SUBLOT 1A BLK 1

which on **17 th day of February , 2011** was sold to **STATE OF ARIZONA**

for taxes, interest and penalties and charges amounting to
$ **3,611.76**
as represented in Tax Sale Certificate No. **11034195**

If redemption according to law be not made before the **30 th day of June, 2016** .

I will convey said premises unless the property is redeemed before the stated date a treasurer's deed will be executed and delivered to the county board of supervisors acting on behalf of this state.

Debora Savage

TREASURER'S OFFICE
Gila County, Arizona

6055
S Puerto Rico Ave Claypool

605

6055

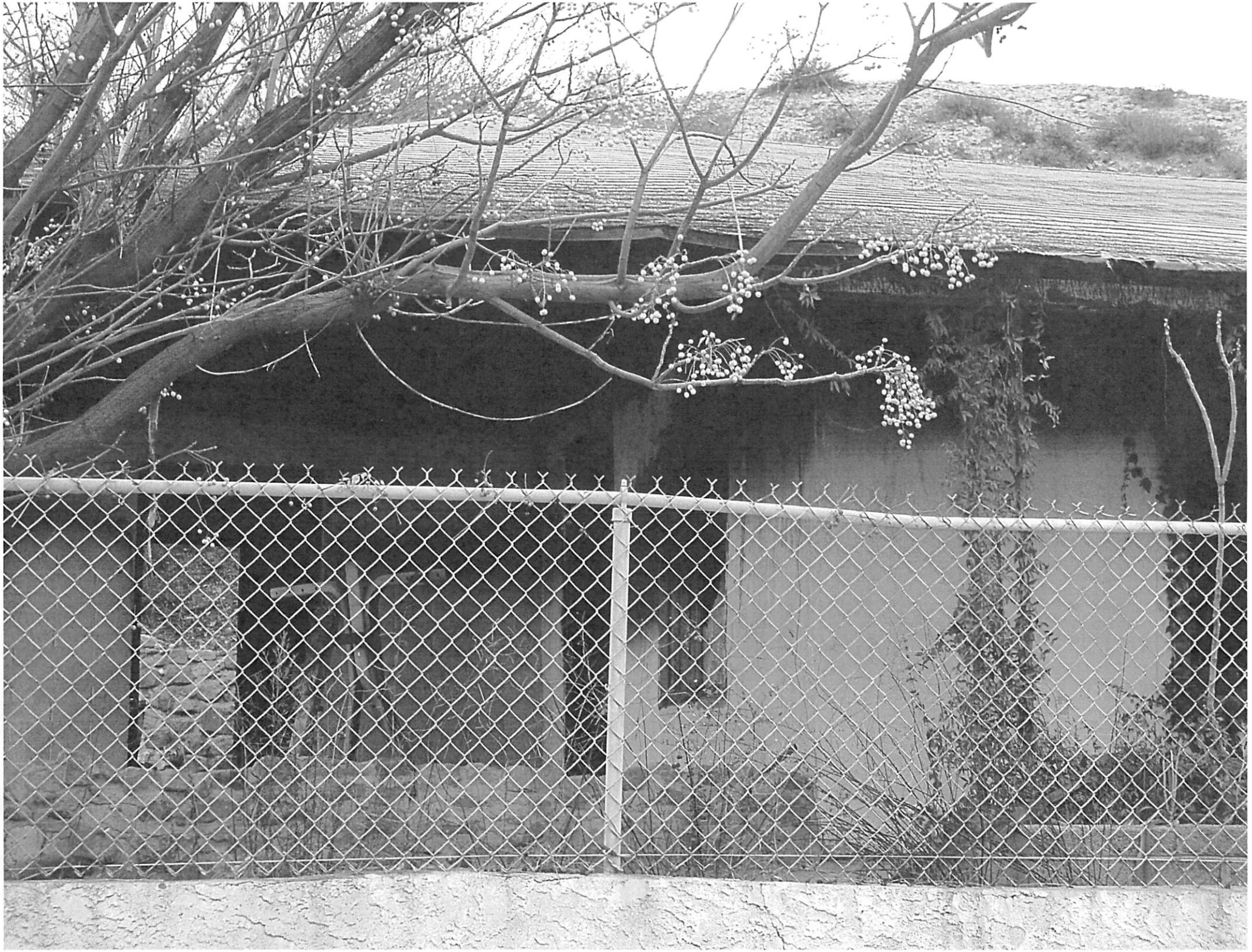

The materials available at this web site are for informational purposes only and do not constitute a legal document.

SE 1/4 NW 1/4 SECTION 29
T1N R15E

206-10
1 of 2
CODE 4089
UPDATED 11-13-13

SEE MAP 206-03 3 of 4

PUERTO RICO SUBDIVISION
Gila County Recorded Plat 50

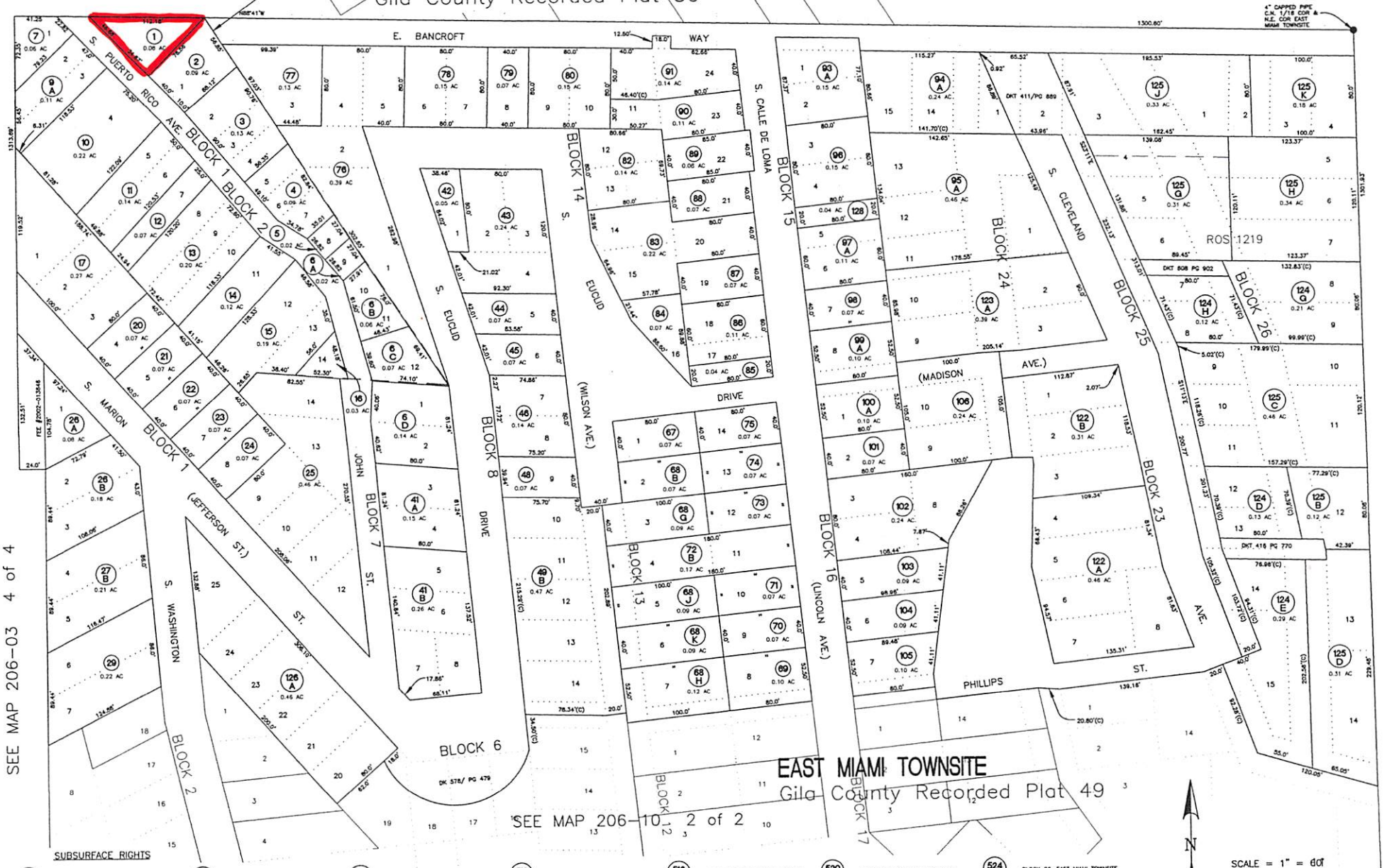

EAST MIAMI TOWNSITE
Gila County Recorded Plat 49

SUBSURFACE RIGHTS

500 A	PUBLIC GROUNDS AND ALLEYS	504 A	BLOCK 5, EAST MIAMI TOWNSITE	508 A	BLOCK 9, EAST MIAMI TOWNSITE	512 A	BLOCK 13, EAST MIAMI TOWNSITE	516 A	BLOCK 17, EAST MIAMI TOWNSITE	520 A	BLOCK 22, EAST MIAMI TOWNSITE	524 A	BLOCK 26, EAST MIAMI TOWNSITE
501 A	BLOCK 1, EAST MIAMI TOWNSITE	505 A	BLOCK 6, EAST MIAMI TOWNSITE	509 A	BLOCK 10, EAST MIAMI TOWNSITE	513 A	BLOCK 14, EAST MIAMI TOWNSITE	517 A	BLOCK 18, EAST MIAMI TOWNSITE	521 A	BLOCK 23, EAST MIAMI TOWNSITE	525 A	PUERTO RICO SUBDIVISION
502 A	BLOCK 2, EAST MIAMI TOWNSITE	506 A	BLOCK 7, EAST MIAMI TOWNSITE	510 A	BLOCK 11, EAST MIAMI TOWNSITE	514 A	BLOCK 15, EAST MIAMI TOWNSITE	518 A	BLOCK 20, EAST MIAMI TOWNSITE	522 A	BLOCK 24, EAST MIAMI TOWNSITE		
503 A	BLOCK 4, EAST MIAMI TOWNSITE	507 A	BLOCK 8, EAST MIAMI TOWNSITE	511 A	BLOCK 12, EAST MIAMI TOWNSITE	515 A	BLOCK 16, EAST MIAMI TOWNSITE	519 A	BLOCK 21, EAST MIAMI TOWNSITE	523 A	BLOCK 25, EAST MIAMI TOWNSITE		

N

SCALE = 1" = 60'
(C) = CALCULATED
(R) = RECORDED

"FOR INFORMATION ONLY, NO LIABILITY ASSUMED."

GILA COUNTY ASSESSOR

ARF-6275 **Consent Agenda Item 5. I.**

Regular BOS Meeting

Meeting Date: 10/06/2020
Submitted For: Marian Sheppard, Clerk of the Board
Submitted By: Melissa Henderson, Deputy Clerk
Department: Clerk of the Board of Supervisors

Information

Request/Subject

Quit Claim Deed for Sale of Assessor's Tax Parcel Number 101-07-188.

Background Information

On May 26, 2015, the Board of Supervisors adopted Resolution No. 15-05-05 which outlines the policy and procedures for the sale of land held by the State of Arizona under tax deed. The procedures allow the Clerk of the Board to sell these parcels over the counter for the total lien amount. A separate $30 fee is required to be paid by the purchaser to record the Quit Claim Deed. The procedures also state that a consent agenda action item will be submitted to the Board of Supervisors on a Regular Meeting agenda to obtain authorization from the Board for the Chairman's signature on the Quit Claim Deed.

Assessor's tax parcel number 101-07-188 was deeded to the State of Arizona c/o Board of Supervisors on July 16, 2018, with a total lien amount of $885.96. It was advertised for sale at the Board's annual auction which was held in December 2018; however, it did not sell. It was added to a list of available properties that could be purchased year-round for the total lien amount.

Evaluation

On September 18, 2020, the Clerk of the Board sold the subject parcel to Corey Lee Busboom for the lien amount of $885.96. Said payment was deposited with the County Treasurer on September 18, 2020. A separate payment of $30 was made to record the Quit Claim Deed. Once the deed has been finalized and recorded, the property will go back on the County's tax rolls.

Mr. Busboom is purchasing the vacant lot to start the process of purchasing two additional properties to combine into one lot.

Conclusion

The Board of Supervisors needs to authorize the Chairman's signature on the Quit Claim Deed to finalize the sale of Assessor's tax parcel number 101-07-188 to Corey Lee Busboom.

Recommendation

The Clerk of the Board recommends that the Board of Supervisors authorize the Chairman's signature on a Quit Claim Deed to finalize the sale of Assessor's tax parcel number 101-07-188 to Corey Lee Busboom.

Suggested Motion

Authorization of the Chairman's signature on the Quit Claim Deed for the Clerk of the Board's over-the-counter sale of Assessor's tax parcel number 101-07-188 to Corey Lee Busboom.

Attachments

101-07-188 QCD

101-07-188 Info

101-07-188 Map

When recorded return to:
Marian Sheppard, Clerk
Gila County Board of Supervisors

GILA COUNTY QUIT-CLAIM DEED

THIS QUIT CLAIM DEED, made this day 6th day of October 2020, between the State of Arizona, by and through the Gila County Board of Supervisors, Grantor, and Corey Lee Busboom, Grantee.

Address of Grantee: 1637 E. Brill Street, Phoenix, Arizona 85006

RECITALS

WHEREAS, the real property hereinafter described was conveyed to the State of Arizona by Treasurer's Deed for the non-payment of taxes, which taxes had been legally assessed against, and became a lien upon, said property according to law; and

WHEREAS, the Gila County Board of Supervisors, on behalf of the State of Arizona, advertised and offered said property for sale to the highest bidder for cash in accordance with A.R.S. §42-18302 and 42-18303; and

WHEREAS, on the 18th day of September 2020, Grantee did purchase said property for the sum of Eight Hundred Eighty-Five Dollars and Ninety-Six Cents ($885.96);

NOW, THEREFORE, in consideration of the premises, Grantor does hereby quit claim to Grantee, the following described real property situated in the County of Gila, State of Arizona.

Assessor's Tax Parcel Number: 101-07-188

Legal Description:

LOT 30 BLOCK 23 OF HAYDEN TOWNSITE, ACCORDING TO MAP NO. 170, RECORDS OF GILA COUNTY, ARIZONA.

Exempt from Affidavit of Property Value pursuant to A.R.S. §11-1134 (A) (3)

Grantor:

_____
Woody Cline, Chairman
Gila County Board of Supervisors

Attest:

_____
Marian Sheppard, Clerk
Gila County Board of Supervisors

STATE OF ARIZONA)
) SS **ACKNOWLEDGEMENT**
COUNTY OF GILA)

Before me, Melissa Henderson, a Notary Public in and for the County of Gila, State of Arizona, on this 6th day of October 2020, personally appeared Woody Cline, Chairman, Board of Supervisors, Gila County, Arizona, known to me to be the person whose name is subscribed to the foregoing instrument and acknowledged to me that he executed the same for the purpose and consideration therein expressed.

_____
Notary Public
My Commission Expires:

WHEN RECORDED RETURN TO:
GILA COUNTY TREAS.

2018-007486 TD Page: 1 of 1
07/16/2018 03:28:35 PM Receipt #: 18-5515
Rec Fee: $0 Gila County Treasurers Office
Gila County, Az, Sadie Jo Bingham, Recorder

TREASURER'S DEED
A.R.S. 42-18267

KNOW ALL MEN BY THESE PRESENTS;

WHEREAS, on the **15 / 22** day of **JUNE , 2018** notice according to law was published in the **Payson Round-Up** , a newspaper of general circulation in the County of Gila, State of Arizona, that application for a Treasurer's Deed to the premises hereinafter described had been made by the grantee named herein, and that unless the tax lien is redeemed before the **29 th** day of **JUNE**, **2018**, a Treasurer's Deed will issue to the said grantee, and

WHEREAS, said property tax lien not having been redeemed from such sale, I therefore, pursuant to said notice and in conformity with law have conveyed, and do hereby foreclose the right to redeem and convey, unto said **STATE OF ARIZONA** , the following described premises situated in the County of Gila, State of Arizona, to-wit:

PARCEL NUMBER : **101-07-188** ACCOUNT NUMBER: **R001245**

DESCRIBED AS : **LOT 30 BLOCK 23 OF HAYDEN TOWNSITE, according to Map No.170, records of Gila County, Arizona .**

IN WITNESS WHEREOF, I, **Debi Savage** , Treasurer of the County of Gila, State of Arizona, by virtue of law, have hereunto set my hand and seal this **29 th** day of **JUNE, 2018** .

Debi Savage
Treasurer of Gila County

STATE OF ARIZONA
COUNTY OF GILA

COUNTY TREASURER SEAL GILA COUNTY ARIZONA

This instrument was acknowledged before me this **16 th** day of **JULY, 2018** by **Debi Savage** as Treasurer of the County of Gila, State of Arizona, who then and there stated to me that **SHE** executed the same for the purpose and consideration therein expressed.

DAWNIE LYON
Notary Public - State of Arizona
GILA COUNTY
My Commission Expires
April 30, 2020

Dawnie Lyon
Notary Public
My Commission Expires: 4-30-2020

Deed to State 101-07-187 /188

empty lot in front the older home whats lft of it, is to the

back on th pictures, and part of the road that gets to it.

ds/mg 05-31-18

101-07-188 This is a small, vacant parcel that adjoins parcel # 101-07-187 + does not include a portion of First Street, Hayden.

Lien 835.96
Fee 50.00
$885.96

THIS PROPERTY IS SUBJECT TO
FORECLOSURE FOR
DELINQUENT TAXES
101-07-188
THIS PROPERTY IS SUBJECT TO
FORECLOSURE FOR
DELINQUENT TAXES
101-07-188
Delores Savage
Treasurer of
Gila County, Arizona

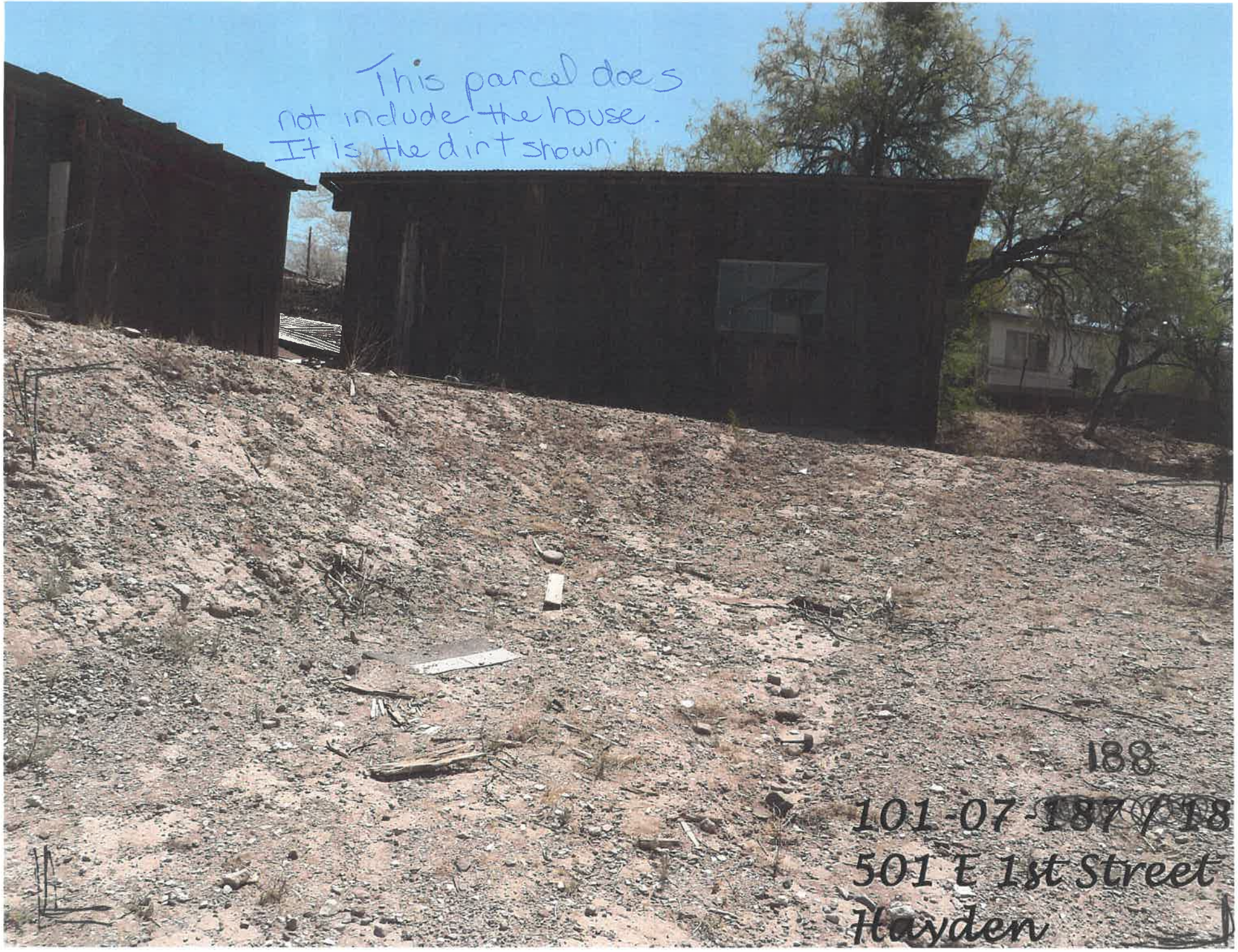
This parcel does
not include the house.
It is the dirt shown.
188
101-07-187/18
501 E 1st Street
Hayden

188
101-07-187/018
501 E 1st Street

Tasks

Search results

Parcel
101-07-188

Hayden

X: 508798.063880, Y: 729592.581774 (IFOOT)

1 Parcels selected

SW 1/4 SW 1/4 SECTION 11
NW 1/4 NW 1/4 SECTION 14
T5S R15E

101-07
6 of 6
CODE 4160
UPDATED 4-07-15

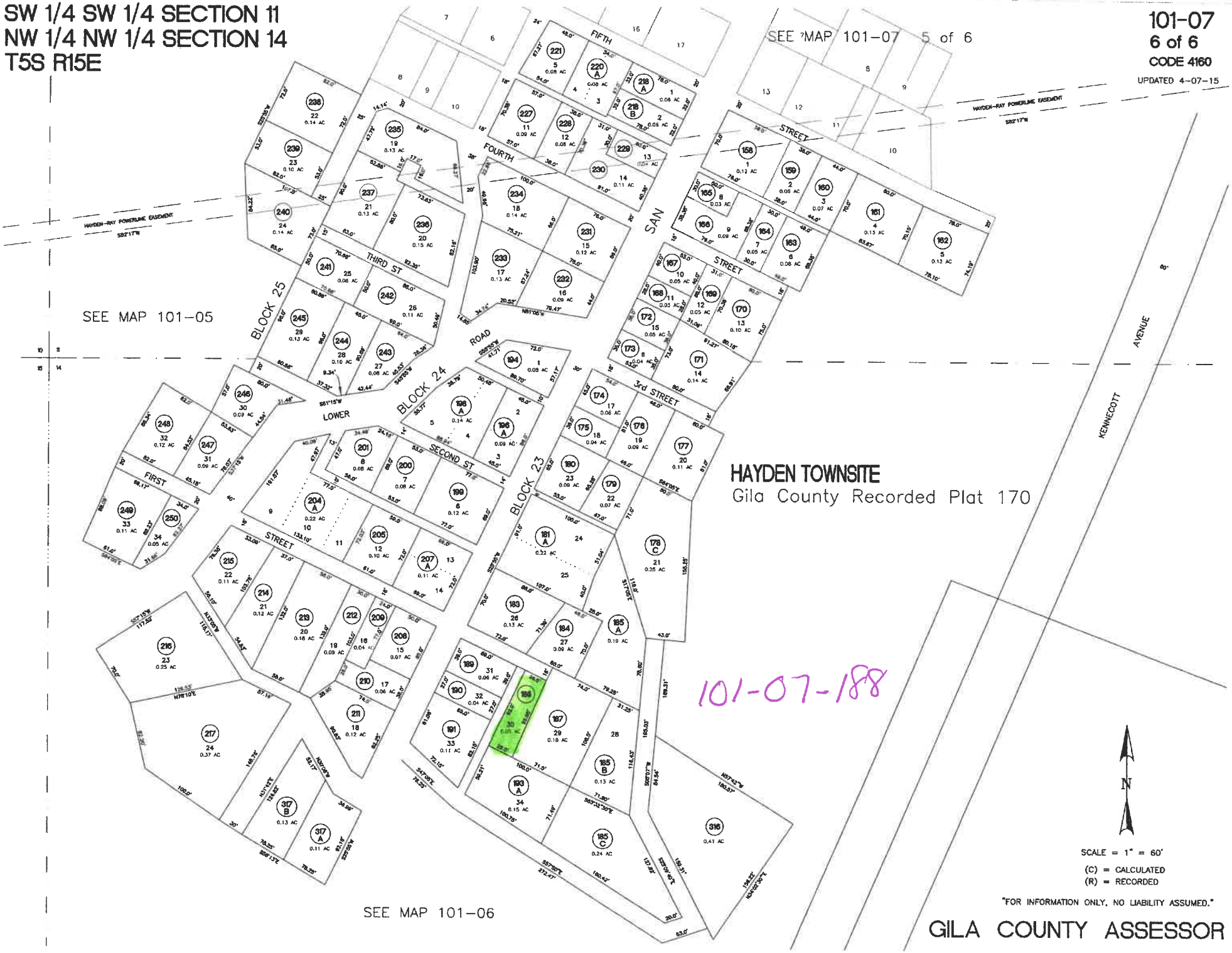

W 1/4 SW 1/4 SECTION 11
W 1/4 NW 1/4 SECTION 14
5S R15E

101-07
6 of 6
CODE 4160
UPDATED 4-07-15

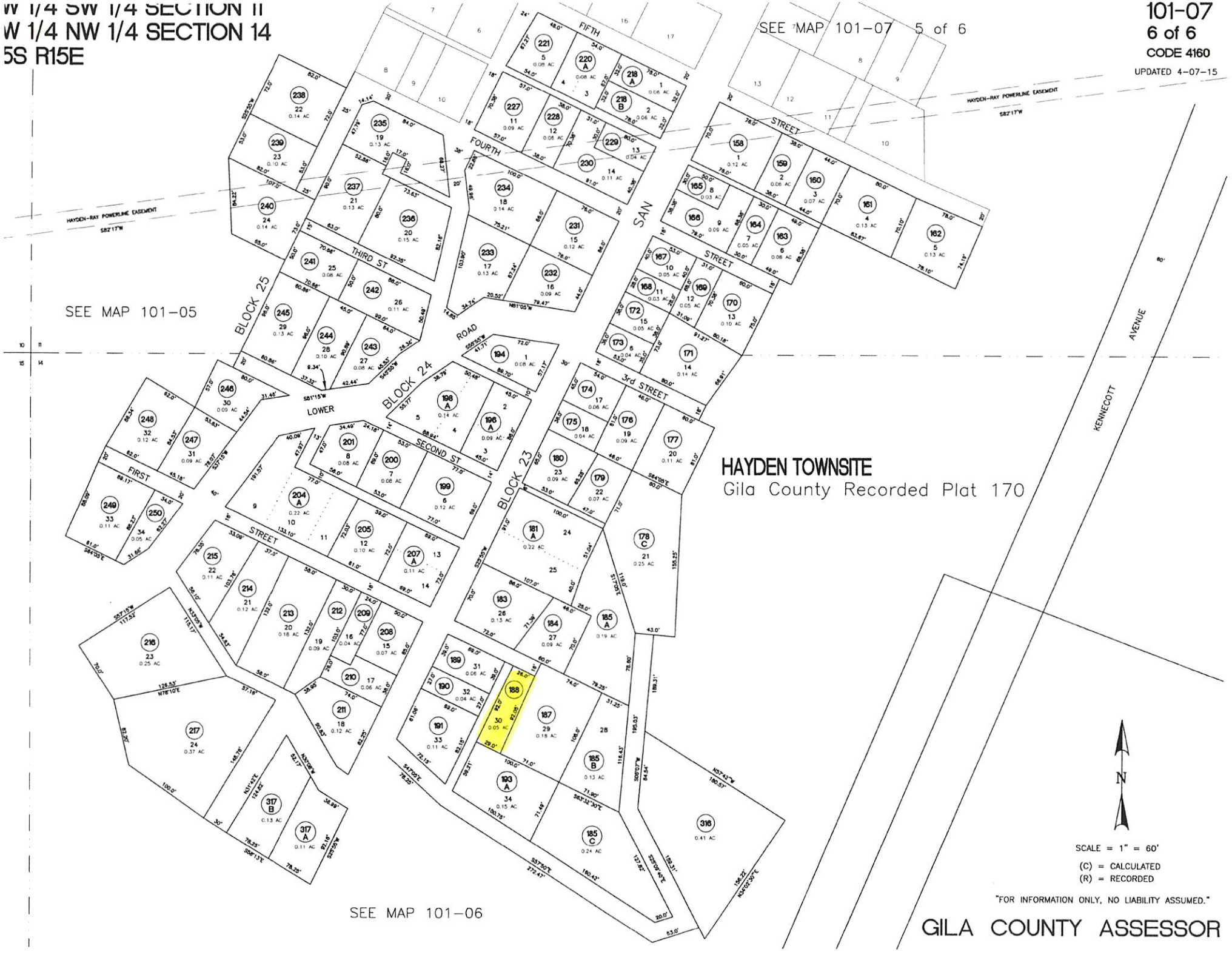

ARF-6270 **Consent Agenda Item** **5. J.**

Regular BOS Meeting

Meeting Date: 10/06/2020

Reporting Period: September 15, 2020 to September 22, 2020

Submitted For: Marian Sheppard, Clerk of the Board

Submitted By: Melissa Henderson, Deputy Clerk

Information

Subject

Board of Supervisors' September 15, 2020 and September 22, 2020 Meeting Minutes.

Suggested Motion

Approval of the Board of Supervisors' September 15, 2020 and September 22, 2020 meeting minutes.

Attachments

09-15-20_Regular Meeting Minutes

09-15-20_Special Meeting Minutes

09-22-20 Special Meeting Minutes

BOARD OF SUPERVISORS MEETING MINUTES
GILA COUNTY, ARIZONA

Date: September 15, 2020

WOODY CLINE
Chairman

TOMMIE C. MARTIN
Vice-Chairman

TIM R. HUMPHREY
Member

MARIAN SHEPPARD
Clerk of the Board

By: Marian Sheppard

Gila County Courthouse
Globe, Arizona

PRESENT: Woody Cline, Chairman; Tommie Martin, Vice-Chairman (by phone); and Tim R. Humphrey, Member

STAFF PRESENT: W. James Menlove, County Manager; Jacque Sanders, Deputy County Manager, District Librarian; Homero Vela, Assistant County Manager; Jefferson R. Dalton, Deputy Gila County Attorney and Civil Bureau Chief; Charles Shire, Deputy County Attorney-Civil (via ITV); and Marian Sheppard, Clerk of the Board

Item 1 – CALL TO ORDER - PLEDGE OF ALLEGIANCE – INVOCATION

Chairman Cline called the Regular Meeting to order at 10:00 a.m. this date in the Board of Supervisors' hearing room. Cathy Melvin led the Pledge of Allegiance and James Menlove delivered the invocation.

Item 2 – PUBLIC HEARINGS:

A. Information/Discussion/Action to adopt Ordinance No. 2020-03 which authorizes the modification of the Zoning Map for Unincorporated Areas of Gila County by changing the zoning of Assessor's parcel number 205-07-020Q from Commercial Three District (C3) to Residence One District-Density District 8 (R1-D8) and changing the zoning of that part of Assessor's parcel number 205-07-020R currently designated as C3 to R1-D8.

Scott Buzan, Community Development Department Director, presented background information on this agenda item. His presentation to the Board of Supervisors was as follows - This rezoning is for two parcels close to Highway 188 just outside of Globe. These properties are vacant land located in Globe, Arizona, and are owned by Shannon Blackwell and Floyd Nelson Gray, Jr. The applicants, Ms. Blackwell and Mr. Gray, wish to rezone two adjacent parcels

from Commercial 3 Use District (C3) to Residence One District-Density District 8 (R1-D8) to install a manufactured home on each parcel. Parcel number 205-07-020R is primarily zoned R1-D8 with a small portion of the southwest corner zoned C3. Gila County designated 400 feet on either side of Highway 188 as C3 many years ago in anticipation of commercial development along the highway. What commercial development there is more to the south, closer to the Globe city limit. In 2017, the prior owner of these two parcels applied and received approval to rezone from C3 to R1-D8 for 3 parcels to the immediate west. These where rezoned so that manufactured homes could be installed on each parcel. Staff reviewed this application and determined that the rezoned properties will be consistent with the residential land use category in terms of density and scale of development and will be consistent with the majority of land uses on the parcels in the area with an R1-D8 zoning designation. A neighborhood meeting was held on July 8, 2020, whereby 19 property owners within 300 feet of the subject property were invited to comment. There were no attendees. Staff hasn't received any comments from the public. The Planning and Zoning Commission, after conducting a public hearing at its August 20, 2020 meeting, unanimously recommends that the Board of Supervisors approve this zoning request. This public meeting was posted 15 days prior to this date as required by Arizona Revised Statute § 11-814. Staff recommends approval of this rezoning application.

Chairman Cline opened the public hearing. Ms. Blackwell raised her hand and identified herself as the applicant but stated that she did not wish to speak. There were no other comments, so Chairman Cline closed the public hearing and asked for a Board motion. Upon motion by Vice-Chairman Martin, seconded by Supervisor Humphrey, the Board unanimously adopted Ordinance No. 2020-03. **(A copy of the Ordinance is permanently attached to these minutes and on file in the Board of Supervisors' Office.)**

Item 3 - REGULAR AGENDA ITEMS:

A. Information/Discussion/Action to review all bids submitted for Request for Qualifications No. 062420-*Solid Waste Services for Landfills;* award to the lowest, most responsive, responsible, and qualified company; and authorize the Chairman's signature on the award contract for a period of four years with annual renewals for an amount not to exceed $96,500 annually.

Steve Sanders, Public Works Department Director, advised that Russell Gulch Landfill near Globe and Buckhead Mesa Landfill near Payson require oversight and reporting to the Arizona Department of Environmental Quality and the Arizona Department of Health Services by registered engineers and other professionals. Each landfill has its own unique qualities that require careful monitoring and record keeping. The consulting firm will be tasked to deliver the services in the scope of work outlined in Request for Qualifications (RFQ) No.

062420. Mr. Sanders stated that there were 4 respondents to the RFQ, and he recommended that a contract be awarded to DCR Services & Construction, Inc. as the County has previously contracted with that company for these services. The contract expired last year. Upon motion by Supervisor Humphrey, seconded by Vice-Chairman Martin, the Board unanimously awarded a contract to DCR Services & Construction, Inc. is a not to exceed the annual amount of $96,500 in response to RFQ No. 062420.

B. Information/Discussion/Action to approve an Intergovernmental Agreement (Contract No. IGA2021-037) with the Arizona Department of Health Services for COVID-19 expanded response capabilities in the amount of $1,604,671 for the period beginning July 1, 2020 through February 28, 2022.

Michael O'Driscoll, Health and Emergency Management Department Director, advised that the County has been awarded approximately $1.6 million dollars of COVID-19 funding because his staff submitted a grant application to the Arizona Department of Health Services. He stated that this funding will cover most of the costs that have been incurred with employee salaries. He said the funding will be allocated to the following 3 categories: 1) to cover existing staff salaries, 2) to set aside money to purchase COVID-19 testing and equipment, and 3) money will be used to hire 3 support staff for the Emergency Operations Center. Mr. O'Driscoll added that in working with the County Manager and Finance Director, the County will realize a savings of about $200,000 to $300,000 in the County's General Fund account with this new funding. James Menlove, County Manager, added that this funding does not require a General Fund cash match, so it is a true savings to the County. Upon motion by Vice-Chairman Martin, seconded by Supervisor Humphrey, the Board unanimously approved an Intergovernmental Agreement (Contract No. IGA2021-037) with the Arizona Department of Health Services.

C. Information/Discussion/Action to approve an Intergovernmental Agreement (Contract No. IGA2021-052) with the Arizona Department of Health Services in the amount of $25,000 for environmental health complaint referrals upon signature through August 31, 2021.

Mr. O'Driscoll advised that one of the struggles with Gila County and other Arizona counties is the number of complaints being received, especially from owners of bars, restaurants, and businesses due to the Governor's issuance of executive orders which pertain to the COVID-19 pandemic. County staff investigates all complaints, educates those that submitted a complaint, and then prepares and submits the report to the state, per state requirement. This funding will cover the costs of employee time spent on these complaints. The Supervisors thanked Mr. O'Driscoll and his staff for their efforts and hard work throughout the COVID-19 pandemic and during the numerous fires that have occurred recently in the County. Upon motion by Supervisor Humphrey,

seconded by Vice-Chairman Martin, the Board unanimously approved an Intergovernmental Agreement (Contract No. IGA2021-052) with the Arizona Department of Health Services.

D. Information/Discussion/Action to approve an Intergovernmental Agreement (Contract No. IGA 2020-040) with the Arizona Department of Health Services for Title V Maternal and Child Health Healthy Arizona Families from July 1, 2020 to June 30, 2025, in the amount of $102,673.

Mr. O'Driscoll commented that this money is non-COVID-19 related. The following information is contained in the staff report for this item of which Mr. O'Driscoll reviewed it with the Board. Title V Maternal and Child Health were previously included in the integrated Intergovernmental Agreement (Contract No. ADHS16-098369) for the Healthy People, Healthy Communities program. Title V Maternal and Child Health has provided services in Gila County for over 10 years and will continue to provide family planning and evidence-based strategies that enhance preventive and primary care services for child health, adolescent health, and children with special health care needs. Title V was removed from the integrated grant because it will now be a cost-reimbursement contract and not at a fixed price. The Board thanked Mr. O'Driscoll for the explanation. Upon motion by Vice-Chairman Martin, seconded by Supervisor Humphrey, the Board unanimously approved an Intergovernmental Agreement (Contract No. IGA2020-040) with the Arizona Department of Health Services.

E. Information/Discussion/Action to approve Amendment No. 2 to Contract No. 120617 Security Service for Globe Courthouse and Payson Courthouse with CBI Security Services, Inc. to extend the term of service for one year, from July 10, 2020 to July 9, 2021; and increase the annual rate by $11,235.35 for a total of $201,500.

Mary Springer, Finance Director, advised that when this contract was initially negotiated with CBI Security Services, Inc., it included renewal options with escalating annual costs. Upon motion by Supervisor Humphrey, seconded by Vice-Chairman Martin, the Board unanimously approved Amendment No. 2 to Contract No. 120617 with CBI Security Services, Inc.

F. Information/Discussion/Action to approve a Lease Agreement with Twin Pines, LLC to provide office space for the Community Services Community Action Program and the University of Arizona Cooperative Extension Program at the Twin Pines Plaza in Payson at a cost of $2,663.98 per month beginning September 15, 2020 through September 14, 2022.

Ms. Springer advised that the purpose of entering this agreement is to provide office space for the staff of the Community Action Program and the Cooperative Extension Program. Staff for these programs is currently located at the County

Complex which is due to be demolished soon so that construction may commence on a new facility. Mr. Menlove added that a ribbon-cutting ceremony will be planned sometime in October to commemorate the start of the construction of the new County facility. Upon motion by Vice-Chairman Martin, seconded by Supervisor Humphrey, the Board unanimously approved a Lease Agreement with Twin Pines, LLC to provide office space for the Community Services Community Action Program and the University of Arizona Cooperative Extension Program at the Twin Pines Plaza in Payson at a cost of $2,663.98 per month beginning September 15, 2020 through September 14, 2022.

G. Information/Discussion/Action to adopt Resolution No. 20-09-02 authorizing the Gila County Recorder as the Board of Supervisors' designee to approve the use of all Gila County ballot drop-off boxes and locations in all elections occurring in Gila County.

Sadie Bingham, Gila County Recorder, advised that the Arizona Revised Statutes authorize the Arizona Secretary of State, with approval of the Arizona Attorney General and the Governor of the State of Arizona, to prescribe in an official instructions and procedures manual the procedures for early voting, voting and collection of ballots. The 2019 Elections Procedures Manual provides in Chapter 2, Early Voting, § I (1) that "*all ballot drop-off locations and drop-boxes shall be approved by the Board of Supervisors (or designee).*" This Resolution would authorize the Gila County Recorder to act as the Board of Supervisors' designee to approve the use of all Gila County ballot drop-off boxes for all elections occurring in Gila County. Ms. Bingham advised that her Office has 2 ballot boxes and an additional 8 ballot boxes were recently received from the state to be placed throughout the County. She is predicting that approximately 25,000 early ballots will be mailed by her Office for the upcoming General Election. Vice-Chairman Martin thanked Ms. Bingham and her staff for their work on the Primary Election and the upcoming General Election as she said it has been confusing this year. Supervisor Humphrey asked if a ballot box will be stationed in the Roosevelt Lake area. Ms. Bingham replied that she has looked at a couple of sites that were not feasible. Supervisor Humphrey mentioned looking at the Forest Service office to which Ms. Bingham replied she will investigate the feasibility of placing a ballot box at that location. Upon motion by Supervisor Humphrey, seconded by Vice-Chairman Martin, the Board unanimously adopted Resolution No. 20-09-02. **(A copy of the Resolution is permanently attached to these minutes and on file in the Board of Supervisors' Office.)**

Upon motion by Vice-Chairman Martin, seconded by Supervisor Humphrey, the Board unanimously adjourned as the Gila County Board of Supervisors and convened as the Gila County Library District Board of Directors to address the following agenda item.

H. (Motion to adjourn as the Gila County Board of Supervisors and convene as the Gila County Library District Board of Directors.) Information/Discussion/ Action to authorize the submission and subsequent acceptance of a State Grants-In-Aid Application by the Gila County Library District to the Arizona State Library, Archives and Public Records, Library Development Division, for the fiscal year 2021 in the amount of $25,000 designated to Gila County for the period July 1, 2020 through June 30, 2021. (Motion to adjourn as the Gila County Library District Board of Directors and reconvene as the Gila County Board of Supervisors.)

Jacque Sanders, Deputy County Manager, District Librarian, advised that the County must only apply for this grant to receive funds as it is a non-competitive grant. She added that the amount of funding received for approximately 20 years was $23,000; however, last year that funding amount was increased to $25,000. Upon motion by Supervisor Humphrey, seconded by Vice-Chairman Martin, the Board unanimously authorized the submission and subsequent acceptance of a State Grants-In-Aid Application by the Gila County Library District to the Arizona State Library, Archives and Public Records, Library Development Division, for the fiscal year 2021 in the amount of $25,000 designated to Gila County for the period July 1, 2020 through June 30, 2021.

Upon motion by Vice-Chairman Martin, seconded by Supervisor Humphrey, the Board unanimously adjourned as the Gila County Library District Board of Directors and reconvened as the Gila County Board of Supervisors to address the remaining agenda items.

Item 4 - CONSENT AGENDA ACTION ITEMS: (Any matter on the Consent Agenda will be removed from the Consent Agenda and discussed and voted upon as a regular agenda item upon the request of any member of the Board of Supervisors.)

A. Adoption of an Order to cancel November 3, 2020, governing board elections for certain fire districts, water, and wastewater improvement districts, sanitary districts, vocational technology districts, school districts, and provisional college districts; and appoint governing board members to those districts as listed on Attachments A through E of the Order. (A copy of the Order is permanently attached to these minutes and on file in the Board of Supervisors' Office.)

B. Approval for the continued use of the Sourcewell Contract No. 032119-CAT financing a 2018 Model 120M2 AWD Caterpillar Motor Grader serial number M9H00559 using Caterpillar Financial Services Corporation for the payment of $32,239.80 in September 2020.

C. Acknowledgment of the re-election of Yvette Baxley to the Correctional Officers Retirement Plan (CORP) Local Board for Dispatchers for the term of office ending on December 31, 2023; and the election of Jonica Flores to the CORP Local Board for Detention Officers and Non-Uniformed Officers for the term of office ending on December 31, 2023.

D. Approval to appoint Ms. Sammi Jenkins-Cooper to the Gila County Planning and Zoning Commission to fulfill Mr. Terry Otts' unexpired term of office that ends on December 31, 2022.

E. Approval of the Board of Supervisors' August 25, 2020 and September 1, 2020 meeting minutes.

F. Approval of the Human Resources Department monthly activity reports for August 2020.

AUGUST 4, 2020

DEPARTURES:
1. Debra Archuleta - Sheriff's Office - Detention Officer - 08/14/20 - General Fund - DOH 10/23/17
2. Jessica Fox - Public Works - Scalehouse Attendant - 08/05/20 - Recycling and Landfill Management Fund - DOH 09/10/18
3. Delanie Rivas - Public Fiduciary - Summer Youth Participant - 07/17/20 - General Fund - DOH 06/08/20

NEW HIRES:
4. Mitzi Ochoa - Library Districts - Library Clerk - 08/03/20 - Library Assistance Fund - Replacing Rosa Navarro

TEMPORARY HIRES TO COUNTY SERVICES:
5. Sharon Winters - Public Works - Temporary Scalehouse Attendant - 08/10/20 - Recycling and Landfill Management Fund

END PROBATIONARY PERIOD:
6. Cody Thomason - Sheriff's Office - Deputy Sheriff - 08/25/20 - General Fund

OTHER ACTIONS:
7. Nikki Lewis - Library District - Early Literacy Community Liaison - 07/01/20 - Library District Grants Fund - Reduction in hours
8. Mathew Gonzales - Probation - Surveillance Officer - 08/03/20 - From General (.74)/Adult Probation Service Fees (.26) Funds - To General Fund - Change in fund code

9. Gilbert Jacinto - Probation - Surveillance Officer - 08/03/20 – General (.50)/Superior Court Cost of Prosecution (.50) Funds - To Various Funds - Change in fund code
10. Kathleen Lord Joerns - Probation - Deputy Probation Officer II - 08/03/20 - From Adult Probation Service Fees Fund - To Adult Probation Service Fees (.55)/Drug Gang Violent Crime Control (.45) Funds - Change in fund code
11. Garth Linkey - Probation - Deputy Probation Officer I - 08/03/20 - From Adult Intensive Probation Supervision Fund - To General Fund - Change in fund code
12. Robert Deck - Probation - Deputy Probation Officer II - 08/03/20 - From General Fund - To Adult Intensive Probation Supervision Fund - Change in fund code

REQUEST TO POST:
13. Health and Emergency Services - Medical Assistant - Vacated by Savannah Barajas
14. Public Works - Scalehouse Attendant - Vacated by Jessica Fox

AUGUST 11, 2020

DEPARTURES:
1. Ramona Scales - Health and Emergency Services - Health Services Program Manager - 08/28/20 - Health Service Fund - DOH 10/30/09
2. David O'Brien - Public Works - Vehicle and Equipment Mechanic Senior - 08/03/20 - Public Works Fund - DOH 10/05/15
3. Maria Cook - County Attorney's Office - Temporary Clerk - 08/14/20 - County Attorney Residual Fund - DOH 08/14/20

NEW HIRES:
4. Lupe Pruett - Payson Justice Court - Justice Court Clerk - 08/24/20 - General Fund - Replacing Lydia Towell

DEPARTMENTAL TRANSFERS:
5. Carter Tatum - Sheriff's Office - From Detention Officer - To Deputy Sheriff - 08/17/20 - General Fund - Replacing Joseph Lara

REQUEST TO POST:
6. Public Works - Vehicle and Equipment Mechanic Senior - Vacated by David O'Brien
7. Health and Emergency Services - Health Services Program Manager - Vacated by Ramona Scales
8. Computer Services - IT Support Specialist - New position
9. Payson Justice Court - Temporary Justice Court Clerk - Vacated by Barbara Cox

AUGUST 18, 2020

NEW HIRES:
1. Adrea Ricke - Library Districts - Grant Project Coordinator - 09/08/20 - Library District Grants Fund

END PROBATIONARY PERIOD:
2. Janice Chesser - Health and Emergency Services - Community Health Specialist - 08/03/20 - Teen Pregnancy Prevention Services Fund
3. Tina Cummings - Health and Emergency Services - Animal Care Worker - 08/18/20 - Rabies Control Fund
4. Jacob Shaw - Health and Emergency Services - Animal Control Officer - 08/18/20 - Rabies Control Fund

AUGUST 25, 2020

DEPARTURES:
1. Michael Teitsworth - Sheriff's Office - Detention Officer - 08/12/20 - General Fund - DOH 05/20/19
2. Terry Phillips - Payson Constable's Office - Deputy Constable (.48) - 09/19/20 - General Fund - DOH 04/04/16
3. Cynthia Castaneda - County Attorney's Office - Child Support Services Supervisor - 08/14/20 - IV-D Child Support Fund - DOH 08/26/98

NEW HIRES:
4. Joseph Gonzales - Facilities and Land Management - Building Maintenance Technician - 08/31/20 - Facilities and Land Management Fund - Replacing David Dumler

TEMPORARY HIRES TO COUNTY SERVICES:
5. Rockell Schmidt - Health and Emergency Services - Communicable Disease Specialist - 08/24/20 - Public Health - COVID19 Fund
6. Karen Aguero-Ponce - Health and Emergency Services - Communicable Disease Specialist - 08/17/20 - Public Health - COVID19 Fund

END PROBATIONARY PERIOD:
7. David Dumler - Facilities and Land Management Fund - Building Maintenance Technician Senior - 09/22/20 - Facilities and Land Management Fund
8. Jeffery Brown - Public Works - Automotive Mechanic - 09/16/20 - Public Works Fund

OTHER ACTIONS:
9. Robert Cizek - Public Works - Vehicle and Equipment Mechanic - 09/16/20 - Public Works Fund - Extending probationary period an additional three months

G. Approval of finance reports/demands/transfers for the reporting period of August 1, 2020 through August 31, 2020.

Approve demands and budget amendments for operating transfers. Warrant numbers 304330 through 304380, 304382 through 304538, 304540 through 304691, 304694 through 304731, 304733 through 304768, 304770 through 304874, and 304876 through 304988 totaling $4,322,003.94 for the period 08-01-20 through 08-31-20.

Pursuant to A.R.S. §11-217(C), the published minutes shall include all demands and warrants approved by the Board in excess of one thousand dollars except that multiple demands and warrants from a single supplier or individual under one thousand dollars whose cumulative total exceeds one thousand dollars in a single reporting period shall also be published**. (A listing of issued warrants and voided warrants is permanently attached to these minutes.)**

H. Acknowledgement of contracts under $50,000 which have been approved by the County Manager for the month of August.

Upon motion by Supervisor Humphrey, seconded by Vice-Chairman Martin, the Board unanimously approved Consent Agenda items 4A-4H.

Item 4 – CALL TO THE PUBLIC: Call to the Public is held for public benefit to allow individuals to address the Board of Supervisors on any issue within the jurisdiction of the Board of Supervisors. Board members may not discuss items that are not specifically identified on the agenda. Therefore, pursuant to Arizona Revised Statute §38-431.01(H), at the conclusion of an open call to the public, individual members of the Board of Supervisors may respond to criticism made by those who have addressed the Board, may ask staff to review a matter or may ask that a matter be put on a future agenda for further discussion and decision at a future date.

There weren't any comments from the public.

Item 5 - At any time during this meeting pursuant to A.R.S. §38-431.02(K), members of the Board of Supervisors and the County Manager may present a brief summary of current events. No action may be taken on information presented.

Supervisors Martin, Humphrey, and Cline, and the County Manager and Assistant County Manager presented a summary of current events.

There being no further business to come before the Board of Supervisors, Chairman Cline adjourned the meeting at 10:47 a.m.

APPROVED:

_____

Woody Cline, Chairman

ATTEST:

_____

Marian Sheppard, Clerk of the Board

BOARD OF SUPERVISORS MEETING MINUTES
GILA COUNTY, ARIZONA

Date: September 15, 2020

WOODY CLINE
Chairman

TOMMIE C. MARTIN
Vice-Chairman

TIM R. HUMPHREY
Member

MARIAN SHEPPARD
Clerk of the Board

By: Marian Sheppard

Gila County Courthouse
Globe, Arizona

PRESENT: Woody Cline, Chairman; Tommie C. Martin, Vice-Chairman (by phone); and Tim R. Humphrey, Member.

STAFF PRESENT: W. James Menlove, County Manager; Homero Vela, Assistant County Manager; Jefferson R. Dalton, Deputy Gila County Attorney and Civil Bureau Chief; and Marian Sheppard, Clerk of the Board.

Item 1 – CALL TO ORDER – PLEDGE OF ALLEGIANCE

Chairman Cline called the Special Meeting to order at 1:30 p.m. this date in the Board of Supervisors' hearing room and he led the Pledge of Allegiance.

Item 2 - REGULAR AGENDA ITEMS:

A. Information/Discussion/Action to affirm, modify or reverse the decision of the Gila County Hearing Officer's Final Judgment on Community Development Department Complaint/Case No. CG1901-004.

Scott Buzan, Community Development Department Director, presented the history of this case. Listed below is a summary as provided by Mr. Buzan.

1. A total of 562 days elapsed since the defendant (Bernice Santillanez) was notified of the complaint and the property was brought into compliance.
2. There were 7 hearings in front of the hearing officer and the defendant's son, Angel Redondo, appeared at each of those hearings. Each time he provided various reasons for the property not being brought into compliance.
3. There were 6 orders to bring the property into compliance; a total of 333 days was granted by the hearing officer to bring the property into compliance.
4. There were 11 site inspections by the zoning inspector.

5. A total of $15,800 in fines and civil sanctions were imposed by the hearing officer and that amount was reduced to $7,500 per the Final Judgment of Hearing Officer Donald Voakes dated July 24, 2020.
6. The property was brought into compliance 5 days after the Final Judgment on July 23, 2020.

Chairman Cline asked the reason the hearing officer reduced the fine to which Mr. Buzan replied that he did not know the reason. Chairman Cline then asked Mr. Redondo if he would like to address the Board to which Mr. Redondo declined.

Supervisor Humphrey made a motion to affirm Hearing Officer Donald Voakes' Final Judgment with the fine of $7,500 and added that it is important to uphold the hearing officer's decision. Vice-Chairman Martin seconded the motion and added that this case was heard many times by the hearing officer, so she believes he made a "well-thought-out judgment." The vote passed with a unanimous vote of the Board.

Jefferson Dalton, Deputy County Attorney, Civil Bureau Chief, read aloud a section of Gila County Ordinance No. 05-01-*Gila County Hearing Officer-Rules of Procedure.* He read paragraph 23.9.4 of Section 23.9-*Disposition by the Board.* It states, *"Written notice of the final decision of the Board shall be hand-delivered or mailed first class to all parties by the Clerk of the Board within fifteen (15) calendar days of the Board's decision."*

A short conversation converged on whether the letter containing the Board's decision would be mailed to Ms. Santillanez or Mr. Redondo. Mr. Redondo asked that the letter be mailed to him. Note: Later this date, the Clerk of the Board mailed a letter containing the Board of Supervisors' decision on this hearing to Mr. Redondo by certified mail and also to Ms. Santillanez by certified mail.

Item 3 – CALL TO THE PUBLIC: Call to the Public is held for public benefit to allow individuals to address the Board of Supervisors on any issue within the jurisdiction of the Board of Supervisors. Board members may not discuss items that are not specifically identified on the agenda. Therefore, pursuant to Arizona Revised Statute §38-431.01(H), at the conclusion of an open call to the public, individual members of the Board of Supervisors may respond to criticism made by those who have addressed the Board, may ask staff to review a matter or may ask that a matter be put on a future agenda for further discussion and decision at a future date.

There wasn't any public comment.

Since there was a Regular Meeting held earlier on this date, Chairman Cline did not address item 4 to ask for a summary of current events.

Item 4 - At any time during this meeting pursuant to A.R.S. §38-431.02(K), members of the Board of Supervisors and the County Manager may present a brief summary of current events. No action may be taken on information presented.

There being no further business to come before the Board of Supervisors, Chairman Cline adjourned the meeting at 1:45 p.m.

APPROVED:

_____

Woody Cline, Chairman

ATTEST:

_____

Marian Sheppard, Clerk of the Board

BOARD OF SUPERVISORS MEETING MINUTES
GILA COUNTY, ARIZONA

Date: September 22, 2020

WOODY CLINE Chairman	**MARIAN SHEPPARD** Clerk of the Board
TOMMIE C. MARTIN Vice-Chairman	By: Marian Sheppard
TIM R. HUMPHREY Member	Gila County Courthouse Globe, Arizona

PRESENT: Woody Cline, Chairman; Tommie C. Martin, Vice-Chairman (by phone); and Tim R. Humphrey, Member.

STAFF PRESENT: W. James Menlove, County Manager; Homero Vela, Assistant County Manager; Charles Shire, Deputy County Attorney-Civil; and Marian Sheppard, Clerk of the Board.

Item 1 – CALL TO ORDER – PLEDGE OF ALLEGIANCE

Chairman Cline called the Special Meeting to order at 10:00 a.m. this date in the Board of Supervisors' hearing room and Cathy Melvin led the Pledge of Allegiance.

Item 2 – PUBLIC HEARINGS:

A. Convene a public hearing pursuant to Arizona Revised Statute §11-391 for the purpose of gathering input on a proposal of the Board of Supervisors of Gila County, Arizona, to incur a long-term obligation for the funding of the unfunded pension liability for the Public Safety Personnel Retirement System, Sheriff's Office Correctional Officers Retirement Plan (CORP) for Detention and CORP for Dispatch not secured by the full faith and credit of such county.

Mary Springer, Finance Director, advised that Mark Reader, Stifel Nicolaus & Company Managing Director Public Finance, would be providing a presentation and Michael Townsend, Public Safety Personnel Retirement System (PSPRS) Administrator, was present. She stated that notice of this public hearing was done in accordance with the Arizona Revised Statutes (A.R.S.). The notice was published in the Arizona Silver Belt newspaper and the Payson Roundup newspaper.

Mr. Reader commented that this is the fourth time he has addressed the Board of Supervisors to discuss this topic. He advised that a public hearing must be held per A.R.S. §11-391 so that the County may proceed with the bond financing. Mr. Reader referred to paragraphs A and B of that statute and quoted various sentences within those paragraphs. A.R.S. 11-391 (A) (2) states, "*Hold the public hearing, as announced in the notice, at least fifteen days before adopting the resolution for incurring the long-term obligations. At the hearing, the board shall present an analysis of the need for the project, the need to use long-term financing and any other available options to accomplish the project. Any member of the public must be allowed to speak on the issue of incurring the long-term obligations to finance the proposed project.*" Paragraph B of that statute states, "*At least fifteen days after the hearing the governing body must hold a public meeting to adopt findings and, following the public comments received at and after the hearing, by roll call vote, either: 1. Adopt and enter a resolution of intention to incur long-term obligations to finance the project, stating the public need for the project, the estimated cost and the amount of the long-term obligations to be incurred. 2. Reject long-term financing of the project and abandon further proceedings.*" He proceeded to review a slide presentation which mirrored information that was presented to the Board on June 23, 2020, July 28, 2020, and September 1, 2020. The Board members and James Menlove, County Manager, made comments throughout the presentation. Mr. Reader advised that the next step in the process is for the Board to adopt a resolution which authorizes the various documents that need to be executed and other actions that need to be taken for the bond financing. The resolution will be presented to the Board for adoption on October 20, 2020.

Chairman Cline opened the public hearing. George Chrismon, a resident of Payson, commented that he came to the County Payson Complex yesterday to request that the Board discuss this issue at a future Board meeting and was told that it would be discussed at this Board meeting. He thanked the Supervisors and staff for being concerned about the taxpayers and for working toward a solution to fund the unfunded liability for these pension plans. He ended by saying, “I want to thank all of you, and I think you are doing a wonderful job.”

There weren’t any more public comments, so Chairman Cline closed the public hearing.

Item 3 – CALL TO THE PUBLIC: Call to the Public is held for public benefit to allow individuals to address the Board of Supervisors on any issue within the jurisdiction of the Board of Supervisors. Board members may not discuss items that are not specifically identified on the agenda. Therefore, pursuant to Arizona Revised Statute §38-431.01(H), at the conclusion of an open call to the public, individual members of the Board of Supervisors may respond to criticism made by those who have addressed the Board, may ask staff to review a matter or may ask that a

matter be put on a future agenda for further discussion and decision at a future date.

There wasn't any public comment.

Item 4 - At any time during this meeting pursuant to A.R.S. §38-431.02(K), members of the Board of Supervisors and the County Manager may present a brief summary of current events. No action may be taken on information presented.

Supervisors Martin, Humphrey and Cline, and the County Manager and Assistant County Manager presented a summary of current events.

There being no further business to come before the Board of Supervisors, Chairman Cline adjourned the meeting at 10:47 a.m.

APPROVED:

_____

Woody Cline, Chairman

ATTEST:

_____

Marian Sheppard, Clerk of the Board

ARF-6261 **Consent Agenda Item** **5. K.**

Regular BOS Meeting

Meeting Date: 10/06/2020

Reporting Period: Globe Regional Constable's Office Monthly report for August 2020

Submitted For: Ruben Mancha, Globe Regional Constable

Submitted By: Michael Sellars, Constable Clerk

Information

Subject

Globe Regional Constable's Office monthly report for August 2020

Suggested Motion

Acknowledgment of the August 2020 monthly activity report submitted by the Globe Regional Constable's Office.

Attachments

August2020

RUBEN A MANCHA
GLOBE REGIONAL
CONSTABLE

1400 E ASH ST
GLOBE, AZ 85501
928-402-8758

AUGUST 2020

MONTHLY REPORT

TABLE OF CONTENTS

MONTHLY ACTIVITY LETTER

FEES COLLECTED

CONSTABLE LOG

TREASURER'S RECEIPT

Dan Rodriguez
Deputy Constable

Michael Sellars
Constable Clerk

Office of
Globe Regional Constable
Ruben Mancha

AUGUST, 2020

Gila County Board of Supervisors
1400 East Ash St
Globe AZ 85501

GLOBE REGIONAL CONSTABLE'S OFFICE MONTHLY ACTIVITY LETTER

For the month of **August 2020**, the Globe Regional Constable's Office:

Received a total of **87** papers for service with **161** attempts.

Drove a total of 556 miles.

Mailed a total of 14 warrant letters.

Bailiff for Justice Court 5.

Collected a total of **$1364.20** as follows:

Total Deposited:	$1,364.20
Less Refunds	$15.00
Paid to General Fund:	$1,349.20

Respectfully submitted,

Ruben Mancha
Globe Regional Constable
Gila County, Globe, Arizona

1400 E Ash St Globe, AZ 85501 - Phone (928)408-8758

GLOBE REGIONAL CONSTABLE OFFICE
FEES COLLECTED
AUGUST 2020

DATE	RECEIVED FROM	PROCESS NUMBER	AMOUNT	CHECK / MO / CASH / NCOURT	RECEIPT NUMBER	REFUNDS
8/3/2020	Service First Realty	2008CO005	$40.00	Check	30991	
8/6/2020	GPS Servers LLC	2008CO012	$64.00	Check	30992	
8/6/2020	Mike Wildner	2008CO013	$40.00	Cash	30993	
8/6/2020	Evans Dove & Nelson PLC	2007CO048	$48.00	Check	30994	$8.00
8/11/2020	Sonia Mayson-Hayes	2008CO033	$40.00	Cash	30995	
8/13/2020	Globe MHP	2008CO064	$48.00	Cash	30996	
8/13/2020	Nationwide Legal Services	2008CO029	$56.00	Check	30997	
8/17/2020	Nelson Ware	2008CO048	$63.00	Ncourt	30998	$7.00
8/17/2020	GPS Servers LLC	2008CO046	$126.00	Check	30999	
8/17/2020	GPS Servers LLC	2008CO047	$64.00	Check	31000	
8/19/2020	LaBenz Law Group	2008CO063	$56.00	Ncourt	6101	
8/18/2020	Nationwide Legal Services	2008CO060	$56.00	Check	6102	
8/20/2020	Evans Dove & Nelson PLC	2008CO062	$118.20	Check	6103	
8/24/2020	Globe MHP	2008CO064	$82.00	Cash	6104	
8/25/2020	Provest LLC	2008CO066	$64.00	Check	6105	
8/25/2020	Stephanie Johnson	2008CO068	$40.00	Ncourt	6106	
8/25/2020	Halie Canizales	2008CO069	$40.00	Ncourt	6107	
8/26/2020	Madera Peaks Apts	2008CO074	$82.00	Ncourt	6108	
8/26/2020	Provest LLC	2008CO071	$69.00	Check	6109	
8/28/2020	Service First Realty	2008CO079	$40.00	Check	6110	
8/31/2020	GPS Servers LLC	2008CO085	$64.00	Check	6111	
8/31/2020	GPS Servers LLC	2008CO086	$64.00	Check	6112	
Collected:			$1,364.20			
Refunds:			$15.00			
Balance:			$1,349.20			

Constable Activity Log - Monthly

Constable: Ruben Mancha

Deputy: Dan Rodriguez
Constable Clerk: Michael Sellars

County: Gila
Precinct: Globe

Total Cases Served/Attempted: 161

Mileage Total: 556

Date Received	Type of Document	Case No.	Court	Plaintiff	Defendant	Address	Person Served/ Served Via	Date Served	Service	Mileage Start	Mileage End	Daily Mileage	Notes & Served By
7/28/20	Summons	J0403CM2020-144	Globe Regional Justice Court	State of Arizona	Brenda Chee	Brenda Chee/7832 S. Acoma Dr, Globe, AZ 85501	Brenda Chee/7832 S. Acoma Dr, Globe, AZ 85501	8/2/20	Served			26	Rodriguez
8/3/20	Notice to Appear;Petition	JV2020-096	Gila County Superior Court	State of Arizona	Protected Information	Protected Information	none	8/3/20	Attempted			38	Rodriguez
8/3/20	Notice to Appear;Petition	JV2020-095	Gila County Superior Court	State of Arizona	Protected Information	Protected Information	none	8/3/20	Attempted				Rodriguez
8/3/20	Notice to Appear;Petition	JV2020-095	Gila County Superior Court	State of Arizona	Protected Information	Protected Information	none	8/3/20	Attempted				Rodriguez
8/3/20	Notice	None	None	Service First Realty	Mae Linn Searle	Mae Searle/5934 S. El Camino Dr Claypool, Az 85532	none	8/3/20	Attempted				Rodriguez
8/3/20	Notice to Appear;Petition	JV2020-090	Gila County Superior Court	State of Arizona	Protected Information	Protected Information	none	8/3/20	Attempted				Rodriguez
8/3/20	Order to show cause	J0403TR2020-065	Globe Regional Justice Court	State of Arizona	Arthur Epperson	Arthur Epperson/5535 E. Apache Hills Ln Globe, Az 85501	none	8/3/20	Attempted				Rodriguez
8/3/20	Notice to Appear;Petition	JV2020-096	Gila County Superior Court	State of Arizona	Protected Information	Richard Weaver/5541 S. McKinney Ave, Globe, AZ 85501	none	8/3/20	Attempted				Rodriguez
7/22/20	Summons and Complaint	J0403CV2020-143	Globe Regional Justice Court	Midland Credit Management	Azure Dabbs	Azure Dabbs/1730 S. Century Dr Globe, Az 85501	none	8/3/20	Attempted				Rodriguez
8/3/20	Notice to Appear;Petition	JV2020-096	Gila County Superior Court	State of Arizona	Protected Information	Richard Weaver/5541 S. McKinney Ave, Globe, AZ 85501	none	8/4/20	Attempted			51	Rodriguez
8/3/20	Notice to Appear;Petition	JV2020-096	Gila County Superior Court	State of Arizona	Protected Information	Richard Weaver/5541 S. McKinney Ave, Globe, AZ 85501	none	8/4/20	Attempted				Rodriguez
8/3/20	Notice	None	None	Service First Realty	Mae Linn Searle	Mae Searle/5934 S. El Camino Dr Claypool, Az 85532	none	8/4/20	Attempted				Rodriguez
8/3/20	Notice to Appear;Petition	JV2020-096	Gila County Superior Court	State of Arizona	Protected Information	Protected Information	none	8/4/20	Attempted				Rodriguez
8/3/20	Notice to Appear;Petition	JV2020-096	Gila County Superior Court	State of Arizona	Protected Information	Protected Information	none	8/4/20	Attempted				Rodriguez
8/3/20	Summons	J0403CM2020-396	Globe Regional Justice Court	State of Arizona	Cecelia Ellen Smith	Cecelia Smith979 E. Saguaro Dr, Globe, AZ 85501	none	8/4/20	Attempted				Rodriguez
8/3/20	Summons	J0403CM2020-396	Globe Regional Justice Court	State of Arizona	Cecelia Ellen Smith	Cecelia Smith979 E. Saguaro Dr, Globe, AZ 85501	none	8/4/20	Attempted				Rodriguez
8/3/20	Summons	J0403CM2020-396	Globe Regional Justice Court	State of Arizona	Cecelia Ellen Smith	Cecelia Smith/5559 E. Roberts Dr, Globe, AZ 85501	Cecelia Smith/5559 E. Roberts Dr, Globe, AZ 85501	8/4/20	**Served**				Rodriguez
7/28/20	Notice of Hearing	J0403TR2020-888	Globe Regional Justice Court	State of Arizona	Avi Nanda	Pedro Pena, DPS Claypool, AZ 85532	Monika Sneezy/DPS, Claypool, AZ 85532	8/4/20	Served				Rodriguez
8/3/20	Notice to Appear;Petition	JV2020-095	Gila County Superior Court	State of Arizona	Protected Information	Protected Information	none	8/4/20	Attempted				Rodriguez
8/3/20	Notice to Appear;Petition	JV2020-095	Gila County Superior Court	State of Arizona	Protected Information	Protected Information	Raelynn Oritz/476 E. Sycamore St #4, Globe, AZ 85501	8/4/20	Served				Rodriguez
8/3/20	Notice to Appear;Petition	JV2020-095	Gila County Superior Court	State of Arizona	Protected Information	Protected Information	none	8/4/20	Attempted				Rodriguez
8/3/20	Notice to Appear;Petition	JV2020-095	Gila County Superior Court	State of Arizona	Protected Information	Protected Information	Protected information	8/4/20	Served				Rodriguez
8/3/20	Notice to Appear;Petition	JV2020-096	Gila County Superior Court	State of Arizona	Protected Information	Richard Weaver/5541 S. McKinney Ave, Globe, AZ 85501	none	8/5/20	Attempted			28	Rodriguez
8/3/20	Notice to Appear;Petition	JV2020-096	Gila County Superior Court	State of Arizona	Protected Information	Richard Weaver/5541 S. McKinney Ave, Globe, AZ 85501	none	8/5/20	Attempted				Rodriguez
8/5/20	Subpoena	M0441CT2020-347	Globe Regional Justice Court	State of Arizona	Alexandry Dumitrascy	Sgt Bender MPD/740 W. Sullivan St Miami, Az 85539	J. Gregovich MPD/740 W. Sullivan St Miami, Az 85539	8/5/20	Served				Rodriguez
8/3/20	Notice to Appear;Petition	JV2020-096	Gila County Superior Court	State of Arizona	Protected Information	Protected Information	none	8/5/20	Attempted				Rodriguez
8/3/20	Notice to Appear;Petition	JV2020-096	Gila County Superior Court	State of Arizona	Protected Information	Protected Information	none	8/5/20	Attempted				Rodriguez
8/3/20	Notice	None	None	Service First Realty	Mae Linn Searle	Mae Searle/5934 S. El Camino Dr Claypool, Az 85532	none	8/5/20	Attempted				Rodriguez
8/3/20	Notice to Appear;Petition	JV2020-090	Gila County Superior Court	State of Arizona	Protected Information	Protected Information	Protected information	8/5/20	Served				Rodriguez

Constable Activity Log - Monthly

Constable: Ruben Mancha

Deputy: Dan Rodriguez
Constable Clerk: Michael Sellars

County: Gila
Precinct: Globe

Total Cases Served/Attempted: 161

Mileage Total: 556

Date Received	Type of Document	Case No.	Court	Plaintiff	Defendant	Address	Person Served/ Served Via	Date Served	Service	Mileage Start	Mileage End	Daily Mileage	Notes & Served By
8/6/20	Child Custody Packet	DO201500261	Gila County Superior Court	Joseph Garrett Williams	Tiara Marlene Gatskill	Joseph Williams/1400 E. Ash St Globe, Az 85501	none	8/6/20	Attempted			8	Rodriguez
8/6/20	Arrest Warrant	J0403TR2019-733	Globe Regional Justice Court	State of Arizona	Billy Jack Ronald Owen Moore	Billy Jack Moore/289 N. Thunderbird Dr Apache Junction, AZ 85119	Warrant letter mailed	8/6/20	Attempted				Sellars
8/6/20	Arrest Warrant	J0403CR2006-51	Globe Regional Justice Court	State of Arizona	Billy Jack Ronald Owen Moore	Billy Jack Moore/289 N. Thunderbird Dr Apache Junction, AZ 85119	Warrant letter mailed	8/6/20	Attempted				Sellars
8/6/20	Arrest Warrant	J0403TR2005-1090	Globe Regional Justice Court	State of Arizona	Billy Jack Ronald Owen Moore	Billy Jack Moore/289 N. Thunderbird Dr Apache Junction, AZ 85119	Warrant letter mailed	8/6/20	Attempted				Sellars
8/6/20	Arrest Warrant	J0403TR2018-2431	Globe Regional Justice Court	State of Arizona	Kenneth Turner	Kenneth Turner/5631 S. McKinney Ave Globe, Az 85501	Warrant letter mailed	8/6/20	Attempted				Sellars
8/6/20	Arrest Warrant	J0403TR2019-1176	Globe Regional Justice Court	State of Arizona	Kenneth Turner	Kenneth Turner/5631 S. McKinney Ave Globe, Az 85501	Warrant letter mailed	8/6/20	Attempted				Sellars
8/6/20	Arrest Warrant	J0403CR2016-131	Globe Regional Justice Court	State of Arizona	Joshua Mariscal	Joshua Mariscal/PO Box 1689 Globe, Az 85501	Warrant letter mailed	8/6/20	Attempted				Sellars
8/6/20	Arrest Warrant	J0403TR2010-873	Globe Regional Justice Court	State of Arizona	Joshua Mariscal	Joshua Mariscal/PO Box 1689 Globe, Az 85501	Warrant letter mailed	8/6/20	Attempted				Sellars
8/6/20	Arrest Warrant	J0403CR2010-218	Globe Regional Justice Court	State of Arizona	Gloria Thompson	Gloria Thompson St 1614 W. Tamarisk Phoenix, Az 85041	Warrant letter mailed	8/6/20	Attempted				Sellars
8/6/20	Arrest Warrant	J0403CR2007-275	Globe Regional Justice Court	State of Arizona	Trevor Thomas	Trevor Thomas/345 Elder St #101 Brooklyn, Ny 11237	Warrant letter mailed	8/6/20	Attempted				Sellars
8/6/20	Arrest Warrant	J0403CR2012-319	Globe Regional Justice Court	State of Arizona	Jimmy Roy Golden	Jimmy Roy Golden/541 Hackney Ave #24 Globe, Az 85501	Warrant letter mailed	8/6/20	Attempted				Sellars
8/6/20	Arrest Warrant	J0403TR2018-510	Globe Regional Justice Court	State of Arizona	Jimmy Roy Golden	Jimmy Roy Golden/541 Hackney Ave #24 Globe, Az 85501	Warrant letter mailed	8/6/20	Attempted				Sellars
8/6/20	Summons	M0444TR2020012 113	Globe Regional Justice Court	State of Arizona	Destiny Ann Madrid	Destiny Madrid/600 S. Oak St, Payson, AZ 85541	Destiny Madrid/1100 South St, Globe, AZ 85501	8/6/20	Served				Rodriguez
8/6/20	Injunction Against Harassment	SO400PO2020-049	Gila County Superior Court	protected Information	Kelly Tautimez	Kelly Tautimez/849 S. Highland Dr, Globe, AZ 85501	None	8/6/20	Attempted				Mancha
8/6/20	Injunction Against Harassment	SO400PO2020-049	Gila County Superior Court	protected Information	Kelly Tautimez	Kelly Tautimez/849 S. Highland Dr, Globe, AZ 85501	None	8/6/20	Attempted				Mancha
8/6/20	Injunction Against Harassment	SO400PO2020-049	Gila County Superior Court	protected Information	Kelly Tautimez	Kelly Tautimez/849 S. Highland Dr, Globe, AZ 85501	None	8/6/20	Attempted				Mancha
8/6/20	Summons and Complaint	J0403DV2020-167	Globe Regional Justice Court	LVNV Funding	Leslie Arlette Mora	Leslie Mora/250 S. Cedar Ave, Miami, AZ 85539	Leslie Mora/250 S. Cedar Ave, Miami, AZ 85539	8/6/20	Served				Rodriguez
8/3/20	Notice to Appear;Petition	JV2020-096	Gila County Superior Court	State of Arizona	Protected Information	Richard Weaver/5541 S. McKinney Ave, Globe, AZ 85501	none	8/7/20	Attempted			15	Rodriguez
8/7/20	Summons	J0403CM2020-406	Globe Regional Justice Court	State of Arizona	Erica Columbus	Erica Columbus/979 E.Saguaro Dr #B158 Globe, Az 85501	None	8/7/20	Attempted				Rodriguez
8/7/20	Summons	J0403CM2020-406	Globe Regional Justice Court	State of Arizona	Erica Columbus	Erica Columbus/979 E.Saguaro Dr #B158 Globe, Az 85501	None	8/7/20	Attempted				Rodriguez
8/6/20	Injunction Against Harassment	SO400PO2020-049	Gila County Superior Court	protected Information	Kelly Tautimez	Kelly Tautimez/849 S. Highland Dr, Globe, AZ 85501	None	8/7/20	Attempted				Rodriguez
8/7/20	Summons	J0403CM2020-406	Globe Regional Justice Court	State of Arizona	Erica Marie Columbus	Erica Columbus/979 E. Saguaro Dr, Globe, AZ 85501	none	8/7/20	Attempted				Rodriguez
8/3/20	Notice to Appear;Petition	JV2020-096	Gila County Superior Court	State of Arizona	Protected Information	Protected Information	none	8/7/20	Attempted				Rodriguez
8/7/20	Summons	J0403CM2020-406	Globe Regional Justice Court	State of Arizona	Erica Marie Columbus	Erica Columbus/979 E. Saguaro Dr, Globe, AZ 85501	none	8/7/20	Attempted				Rodriguez
7/22/20	Summons and Complaint	J0403CV2020-143	Globe Regional Justice Court	Midland Credit Management	Azure Dabbs	Azure Dabbs/1730 S. Century Dr Globe, Az 85501	none	8/7/20	Attempted				Rodriguez
8/3/20	Notice to Appear;Petition	JV2020-096	Gila County Superior Court	State of Arizona	Protected Information	Richard Weaver/5541 S. McKinney Ave, Globe, AZ 85501	none	8/8/20	Attempted			16	Rodriguez
8/3/20	Notice to Appear;Petition	JV2020-096	Gila County Superior Court	State of Arizona	Protected Information	Protected Information	protected information	8/8/20	Served				Rodriguez
8/7/20	Summons	J0403CM2020-406	Globe Regional Justice Court	State of Arizona	Erica Marie Columbus	Erica Columbus/979 E. Saguaro Dr, Globe, AZ 85501	none	8/8/20	Attempted				Rodriguez
8/7/20	Summons	J0403CM2020-406	Globe Regional Justice Court	State of Arizona	Erica Marie Columbus	Erica Columbus/979 E. Saguaro Dr, Globe, AZ 85501	Erica Columbus/979 E. Saguaro Dr, Globe, AZ 85501	8/8/20	Served				Rodriguez

Constable Activity Log - Monthly

Constable: Ruben Mancha

County: Gila
Precinct: Globe

Deputy: Dan Rodriguez
Constable Clerk: Michael Sellars

Total Cases Served/Attempted: 161

Mileage Total: 556

Date Received	Type of Document	Case No.	Court	Plaintiff	Defendant	Address	Person Served/ Served Via	Date Served	Service	Mileage Start	Mileage End	Daily Mileage	Notes & Served By
8/6/20	Injunction Against Harassment	SO400PO2020-049	Gila County Superior Court	protected Information	Kelly Tautimez	Kelly Tautimez/849 S. Highland Dr, Globe, AZ 85501	None	8/8/20	Attempted				Rodriguez
8/6/20	Injunction Against Harassment	SO400PO2020-049	Gila County Superior Court	protected Information	Kelly Tautimez	Kelly Tautimez/849 S. Highland Dr, Globe, AZ 85501	Kelly Tautimez/849 S. Highland Dr, Globe, AZ 85501	8/8/20	Served				Rodriguez
8/7/20	Summons	J0403CM2020-410	Globe Regional Justice Court	State of Arizona	Robert John Perez	Robert Perez/348 N. Miami Ave, Miami, AZ 85539	Robert Perez/348 N. Miami Ave, Miami, AZ 85539	8/8/20	Served				Rodriguez
8/7/20	Summons	J0403CM2020-406	Globe Regional Justice Court	State of Arizona	Erica Columbus	Erica Columbus/979 E.Saguaro Dr #B158 Globe, Az 85501	None	8/8/20	Attempted				Rodriguez
8/7/20	Summons	J0403CM2020-408	Globe Regional Justice Court	State of Arizona	Linda Pirtle	Linda Pirtle/252 Antelope Globe, Az 85501	none	8/8/20	Attempted				Rodriguez
8/7/20	Summons	J0403CM2020-406	Globe Regional Justice Court	State of Arizona	Erica Columbus	Erica Columbus/979 E.Saguaro Dr #B158 Globe, Az 85501	Erica Columbus/979 E.Saguaro Dr #B158 Globe, Az 85501	8/8/20	Served				Rodriguez
8/7/20	Summons	J0403CM2020-409	Globe Regional Justice Court	State of Arizona	Ariel Bullock	Ariel Bullock/358 N. Stagecoach #7 Roosevelt, AZ 85545	none	8/8/20	Attempted				Rodriguez
8/7/20	Summons	J0403CM2020-408	Globe Regional Justice Court	State of Arizona	Linda Pirtle	Linda Pirtle/252 Antelope Globe, Az 85501	none	8/10/20	Attempted				Rodriguez
8/7/20	Summons	J0403CM2020-408	Globe Regional Justice Court	State of Arizona	Linda Pirtle	Linda Pirtle/252 Antelope Globe, Az 85501	Linda Pirtle/252 Antelope Globe, Az 85501	8/10/20	Served				Rodriguez
8/7/20	Summons	J0403CM2020-409	Globe Regional Justice Court	State of Arizona	Ariel Bullock	Ariel Bullock/358 N. Stagecoach #7 Roosevelt, AZ 85545	none	8/10/20	Attempted				Rodriguez
8/7/20	Summons	J0403CM2020-409	Globe Regional Justice Court	State of Arizona	Ariel Bullock	Ariel Bullock/358 N. Stagecoach #7 Roosevelt, AZ 85545	none	8/10/20	Attempted				Rodriguez
8/10/20	Child Support Packet	JS519643 / JD509129	Maricopa County Superior Court	State of Arizona	Protected Information	Protected Information	None	8/10/20	Attempted				Rodriguez
8/3/20	Notice to Appear;Petition	JV2020-096	Gila County Superior Court	State of Arizona	Protected Information	Richard Weaver/5541 S. McKinney Ave, Globe, AZ 85501	protected information	8/11/20	Attempted				Rodriguez
8/7/20	Summons	J0403CM2020-409	Globe Regional Justice Court	State of Arizona	Ariel Bullock	Ariel Bullock/358 N. Stagecoach #7 Roosevelt, AZ 85545	none	8/11/20	Attempted				Rodriguez
8/11/20	Summons	J0403TR2020-119	Globe Regional Justice Court	State of Arizona	John Simmons	John Simmons/541 W. Hackney Ave #23 Globe, Az 85501	none	8/11/20	Attempted				Rodriguez
8/11/20	Summons	J0403TR2020-119	Globe Regional Justice Court	State of Arizona	John Simmons	John Simmons/541 W. Hackney Ave #23 Globe, Az 85501	none	8/11/20	Attempted				Rodriguez
8/11/20	Summons	J0403TR2020-119	Globe Regional Justice Court	State of Arizona	John Simmons	John Simmons/541 W. Hackney Ave #23 Globe, Az 85501	none	8/11/20	Attempted				Rodriguez
8/11/20	Summons	J0403CM2020-405	Globe Regional Justice Court	State of Arizona	Christie Ann Victor	Christie Victor/Peridot Siding Rd Peridot, Az 85542	Christie Victor/1100 South St Globe, Az 85501	8/11/20	Served				Mancha
8/11/20	Injunction Against Harassment	J0403PO2020-62	Globe Regional Justice Court	protected Information	Kathy Solberg	Kathy Solberg/295 Tyler St Globe, Az 85501	Kathy Solberg/295 Tyler St Globe, Az 85501	8/11/20	Served				Mancha
2/20/20	Injunction Against Harassment	J0403PO2020-12	Globe Regional Justice Court	protected Information	Kathy Solberg	Kathy Solberg/295 Tyler St Globe, Az 85501	Kathy Solberg/295 Tyler St Globe, Az 85501	8/11/20	Served				Mancha
8/11/20	Injunction Against Harassment	J0403PO2020-61	Globe Regional Justice Court	protected Information	Kyle Cupples	Kyle Cupples/2370 US Hwy 60 #222 Globe, Az 85501	Kyle Cupples/2370 US Hwy 60 #222 Globe, Az 85501	8/11/20	Served				Rodriguez
8/10/20	Child Support Packet	JS519643 / JD509129	Maricopa County Superior Court	State of Arizona	Protected Information	Protected Information	None	8/11/20	Attempted				Rodriguez
8/12/20	Summons	J0403CM2020-411	Globe Regional Justice Court	State of Arizona	Jason Cook	Jason Cook/2165 N. Wheatfields Rd #86 Globe, AZ	none	8/12/20	Attempted				Rodriguez
8/12/20	Summons	J0403CM2020-404	Globe Regional Justice Court	State of Arizona	April Crick	April Crick/944 N. Bancroft St Globe, Az 85501	April Crick/944 N. Bancroft St Globe, Az 85501	8/12/20	Served				Rodriguez
8/13/20	Summons	J0403CM2020-411	Globe Regional Justice Court	State of Arizona	Jason Cook	Jason Cook/2165 N. Wheatfields Rd #86 Globe, AZ	none	8/13/20	Attempted				Rodriguez
7/17/20	Criminal Subpoena	J0403CM2020-258	Globe Regional Justice Court	State of Arizona	Zachariah Cole	Zachariah Cole/5381 E. Yuma Trl Globe, Az 85501	none	8/13/20	Attempted				Rodriguez
8/7/20	Summons	J0403CM2020-409	Globe Regional Justice Court	State of Arizona	Ariel Bullock	Ariel Bullock/358 N. Stagecoach #7 Roosevelt, AZ 85545	none	8/13/20	Attempted				Rodriguez
6/25/20	Order of Protection	J0403PO2020-052	Globe Regional Justice Court	protected Information	Romero Guadarrama-Hernandez	Romero Guadarrama-Hernandez/Indian Rt 6 MP12 San Carlos, Az 85501	Hernandez/777 Geranimo Springs San Carlos, AZ 85550	8/13/20	Served				Chris Williams SCPD
8/3/20	Notice to Appear;Petition	JV2020-096	Gila County Superior Court	State of Arizona	Protected Information	Richard Weaver/5541 S. McKinney Ave, Globe, AZ 85501	protected information	8/13/20	Attempted				Rodriguez

Constable Activity Log - Monthly

Constable: Ruben Mancha

County: Gila
Precinct: Globe

Deputy: Dan Rodriguez
Constable Clerk: Michael Sellars

Total Cases Served/Attempted: 161

Mileage Total: 556

Date Received	Type of Document	Case No.	Court	Plaintiff	Defendant	Address	Person Served/ Served Via	Date Served	Service	Mileage Start	Mileage End	Daily Mileage	Notes & Served By
8/10/20	Child Support Packet	JS519643 / JD509129	Maricopa County Superior Court	State of Arizona	Protected Information	Protected Information	None	8/13/20	Attempted				Rodriguez
8/13/20	Summons; Forcible Detainer	J0403CV2020-191	Globe Regional Justice Court	Globe MHP	Matthew Sbragia	Matthew Sbragia/1775 N. Broad St # 72 Globe, Az 85501	Posted & Photographed	8/13/20	Served				Rodriguez
8/10/20	Child Support Packet	JS519643 / JD509129	Maricopa County Superior Court	State of Arizona	Protected Information	Protected Information	None	8/14/20	Attempted				Rodriguez
8/14/20	Criminal Subpoena	J0403CM2020-503	Globe Regional Justice Court	State of Arizona	Mickie Atkins	Officer Lomahoema - GPD/175 N. Pine St Globe, Az 85501	B. McCreary-GPD/175 N. Pine St Globe, Az 85501	8/14/20	Served				Rodriguez
8/14/20	Criminal Subpoena	J0403CM2020-503	Globe Regional Justice Court	State of Arizona	Mickie Atkins	Officer Ortiz - GPD/175 N. Pine St Globe, Az 85501	B. McCreary-GPD/175 N. Pine St Globe, Az 85501	8/14/20	Served				Rodriguez
8/14/20	Criminal Subpoena	J0403CR2019-507	Globe Regional Justice Court	State of Arizona	Allen Owens	Officer Clements-GPD/175 N. Pine St Globe, Az 85501	B. McCreary-GPD/175 N. Pine St Globe, Az 85501	8/14/20	Served				Rodriguez
8/3/20	Notice to Appear;Petition	JV2020-096	Gila County Superior Court	State of Arizona	Protected Information	Richard Weaver/5541 S. McKinney Ave, Globe, AZ 85501	McKinney Ave, Globe, AZ 85501	8/14/20	Served				Rodriguez
8/14/20	Criminal Subpoena	J0403CM2020-503	Globe Regional Justice Court	State of Arizona	Mickie Atkins	Monica Marie Cooper/5900 Main ST #24, Globe, AZ 85501	Monica Marie Cooper/5900 Main ST #24, Globe, AZ 85501	8/14/20	Served				Rodriguez
8/14/20	Criminal Subpoena	J0403CR2019-507	Globe Regional Justice Court	State of Arizona	Allen Owens	Protected Information	none	8/15/20	Attempted				Rodriguez
8/12/20	Summons	J0403TR2020-117	Globe Regional Justice Court	State of Arizona	James Christopher Carrillo Jr	James Carrillo Jr/2426 N. Pinaleno Pass, Globe, AZ 85501	James Carrillo Jr/2426 N. Pinaleno Pass, Globe, AZ 85501	8/15/20	Served				Rodriguez
8/14/20	Criminal Subpoena	J0403CR2019-507	Globe Regional Justice Court	State of Arizona	Allen Owens	Protected Information	protected information	8/17/20	Served			29	Rodriguez
8/17/20	Child Custody Packet	DO2015-00328	Gila County Superior Court	Megan Wallace	Nelson Ware	Megal Wallace/534 E. Prickly Pear Dr Globe, Az 85501	none	8/17/20	Attempted				Mancha
8/17/20	Child Custody Packet	DO2015-00328	Gila County Superior Court	Megan Wallace	Nelson Ware	Megal Wallace/534 E. Prickly Pear Dr Globe, Az 85501	none	8/17/20	Attempted				Mancha
8/17/20	Child Custody Packet	DO2015-00328	Gila County Superior Court	Megan Wallace	Nelson Ware	Megal Wallace/534 E. Prickly Pear Dr Globe, Az 85501	none	8/17/20	Attempted				Mancha
8/7/20	Summons	J0403CM2020-409	Globe Regional Justice Court	State of Arizona	Ariel Bullock	Ariel Bullock/358 N. Stagecoach #7 Roosevelt, AZ 85545	none	8/18/20	Attempted			38	Rodriguez
8/17/20	Criminal Subpoena	J0403CM2020-149	Globe Regional Justice Court	State of Arizona	Brian Barraza	Deputy Heck-GCSO/1100 South St Globe, Az 85501	D. Juhrs-GCSO/1177 E. Monroe St Globe, Az 85501	8/18/20	Served				Rodriguez
8/17/20	Criminal Subpoena	J0403CM2020-149	Globe Regional Justice Court	State of Arizona	Brian Barraza	Deputy Valenzuela-GCSO/1100 South St Globe, Az 85501	D. Juhrs-GCSO/1177 E. Monroe St Globe, Az 85501	8/18/20	Served				Rodriguez
8/14/20	Criminal Subpoena	J0403CR2019-507	Globe Regional Justice Court	State of Arizona	Allen Owens	Protected Information	none	8/18/20	Attempted				Rodriguez
8/18/20	Order to show cause	J0403CR2019-99	Globe Regional Justice Court	State of Arizona	David Vinsant	David Vansant/6082 S. Calle De Loma Claypool, Az 85532	David Vinsant/5616 Central Ave Globe, Az 85501	8/18/20	Served				Rodriguez
8/18/20	Criminal Subpoena	J0403CM2020-274	Globe Regional Justice Court	State of Arizona	Manuel Pesqueira	Deputy Parker-GCSO/1100 South st Globe, Az 85501	P. Johnson-GCSO/1177 E. Monroe St Globe, Az 85501	8/18/20	Served				Rodriguez
8/18/20	Criminal Subpoena	J0403CM2020-274	Globe Regional Justice Court	State of Arizona	Manuel Pesqueira	Deputy Nudson-GSCO/1100 South St Globe, Az 85501	P. Johnson-GCSO/1177 E. Monroe St Globe, Az 85501	8/18/20	Served				Rodriguez
8/18/20	Criminal Subpoena	J0403CM2020-149	Globe Regional Justice Court	State of Arizona	Brian Barraza	Protected Information	protected information	8/18/20	Served				Rodriguez
8/18/20	Order to show cause	J0403CR2019-76	Globe Regional Justice Court	State of Arizona	Desiree Lynch	Desiree Lynch/7744 S. Hopi Ave Globe, Az 85501	Desiree Lynch/7744 S. Hopi Ave Globe, Az 85501	8/18/20	Served				Rodriguez
8/17/20	Summons and Complaint	J0403CV2020-191	Globe Regional Justice Court	LVNV Funding	Mark Polnau	Mark Polnau/466 S. Windy Hill Roosevelt, Az 85545	none	8/18/20	Attempted				Rodriguez
8/18/20	Notice	J0403CM2020-124	Globe Regional Justice Court	State of Arizona	Richard Sanchez II	Richard Sanchez II/1000 W. Blake St #4 Globe, Az 85501	none	8/18/20	Attempted				Rodriguez
8/18/20	Notice	J0403CM2020-124	Globe Regional Justice Court	State of Arizona	Richard Sanchez II	Richard Sanchez II/1000 W. Blake St #4 Globe, Az 85501	none	8/18/20	Attempted				Rodriguez
8/17/20	Summons and Complaint	J0403CV2020-191	Globe Regional Justice Court	LVNV Funding	Mark Polnau	Mark Polnau/466 S. Windy Hill Roosevelt, Az 85545	none	8/18/20	Attempted				Rodriguez
8/17/20	Summons and Complaint	J0403CV2020-176	Globe Regional Justice Court	LVNV Funding	Lonnie Bernal	Lonnie Bernal/448 W. Euclid Ave Globe, Az 85501	None	8/18/20	Attempted				Rodriguez
8/18/20	Criminal Subpoena	J0403CM2020-274	Globe Regional Justice Court	State of Arizona	Manuel Pesqueira	Protected Information	protected information	8/18/20	Served				Rodriguez

Constable Activity Log - Monthly

Constable: Ruben Mancha

Deputy: Dan Rodriguez
Constable Clerk: Michael Sellars

County: Gila
Precinct: Globe

Total Cases Served/Attempted: 161

Mileage Total: 556

Date Received	Type of Document	Case No.	Court	Plaintiff	Defendant	Address	Person Served/ Served Via	Date Served	Service	Mileage Start	Mileage End	Daily Mileage	Notes & Served By
8/14/20	Criminal Subpoena	J0403CR2019-507	Globe Regional Justice Court	State of Arizona	Allen Owens	Protected Information	none	8/18/20	Attempted				Rodriguez
8/18/20	Subpoena	J0403CT2020-873	Globe Regional Justice Court	State of Arizona	Richard Oliver	Trooper Kimbrough-DPS/4335 E. US Highway 60Claypool, Az 85532	Trooper T. Gamboa/4335 E. US Highway 60 Claypool, Az 85501	8/19/20	Served			41	Rodriguez
8/19/20	Child Custody Packet	DO201200130	Gila County Superior Court	Nicole Vargas	Samuel Kannegaard	Samuel Kannegaard/3635 E. Morrow Miami, Az 85539	Samuel Kannegaard/1100 South St Globe, Az 85501	8/19/20	Served				Mancha
8/20/20	Writ of Restitution	J0403CV2020-180	Globe Regional Justice Court	Rockhouse River Ranch	Katherine Curbello	Katherine Curbello/5732 N. Az Hwy 288 Roosevelt, Az 85545	Posted & Photographed	8/20/20	Served			83	Mancha/Rodrigues
8/18/20	Notice	J0403CM2020-124	Globe Regional Justice Court	State of Arizona	Richard Sanchez II	Richard Sanchez II/1000 W. Blake St #4 Globe, Az 85501	none	8/20/20	Attempted				Rodriguez
8/17/20	Summons and Complaint	J0403CV2020-191	Globe Regional Justice Court	LVNV Funding	Mark Polnau	Mark Polnau/466 S. Windy Hill Roosevelt, Az 85545	Mark Polnau/466 S. Windy Hill Roosevelt, Az 85545	8/20/20	Served				Rodriguez
8/7/20	Summons	J0403CM2020-409	Globe Regional Justice Court	State of Arizona	Ariel Bullock	Ariel Bullock/358 N. Stagecoach #7 Roosevelt, AZ 85545	none	8/20/20	Attempted				Rodriguez
8/19/20	Child Custody Packet	JD533419	Maricopa County Superior Court	State of Arizona	Ricky Lee Nelson Sias, Sr	Rickey Lee Nelson Sias, Sr./637 E. Ash St #117 Globe, Az 85501	none	8/20/20	Attempted				Mancha
8/19/20	Child Custody Packet	JD533419	Maricopa County Superior Court	State of Arizona	Ricky Lee Nelson Sias, Sr	Rickey Lee Nelson Sias, Sr./1600 N.Broad St Globe, Az 85501	none	8/20/20	Attempted				Mancha
8/19/20	Child Custody Packet	JD533419	Maricopa County Superior Court	State of Arizona	Ricky Lee Nelson Sias, Sr	Rickey Lee Nelson Sias, Sr./491 N. Broad St Globe, Az 85501	none	8/20/20	Attempted				Mancha
8/19/20	Child Custody Packet	JD533419	Maricopa County Superior Court	State of Arizona	Ricky Lee Nelson Sias, Sr	Rickey Lee Nelson Sias, Sr./637 E. Ash St #117 Globe, Az 85501	none	8/20/20	Attempted				Mancha
8/17/20	Summons and Complaint	J0403CV2020-176	Globe Regional Justice Court	LVNV Funding	Lonnie Bernal	Lonnie Bernal/448 W. Euclid Ave Globe, Az 85501	None	8/20/20	Attempted				Rodriguez
8/20/20	Divorce Packet	V1300DO2020801 68	Yavapai Superior Court	Emily Snelling	Claydon Craig	Claydon Craig/174 Fairview St #2 Globe, Az 85501	none	8/21/20	Attempted			17	Rodriguez
8/18/20	Notice	J0403CM2020-124	Globe Regional Justice Court	State of Arizona	Richard Sanchez II	Richard Sanchez II/1000 W. Blake St #4 Globe, Az 85501	none	8/21/20	Attempted				Rodriguez
8/18/20	Notice	J0403CM2020-124	Globe Regional Justice Court	State of Arizona	Richard Sanchez II	Richard Sanchez II/1000 W. Blake St #4 Globe, Az 85501	none	8/22/20	Attempted				Rodriguez
8/18/20	Notice	J0403CM2020-124	Globe Regional Justice Court	State of Arizona	Richard Sanchez II	Richard Sanchez II/1000 W. Blake St #4 Globe, Az 85501	April Crick/944 N. Bancroft St Globe, Az 85501	8/22/20	Served				Rodriguez
8/20/20	Divorce Packet	V1300DO2020801 68	Yavapai Superior Court	Emily Snelling	Claydon Craig	Claydon Craig/174 Fairview St #2 Globe, Az 85501	none	8/22/20	Attempted				Rodriguez
8/17/20	Summons and Complaint	J0403CV2020-176	Globe Regional Justice Court	LVNV Funding	Lonnie Bernal	Lonnie Bernal/448 W. Euclid Ave Globe, Az 85501	Lonnie Bernal/448 W. Euclid Ave Globe, Az 85501	8/24/20	Served			4	Rodriguez
8/24/20	Summons	M0444CM2020-12272	Payson Magistrate Court	State of Arizona	Scott McBrayer	Scott McBrayer/603 S Ponderosa St Payson, Az 85541	Scott McBrayer/1100 South St Globe, Az 85501	8/24/20	Served				Mancha
8/20/20	Divorce Packet	V1300DO2020801 68	Yavapai Superior Court	Emily Snelling	Claydon Craig	Claydon Craig/174 Fairview St #2 Globe, Az 85501	none	8/24/20	Attempted				Rodriguez
8/25/20	Arrest Warrant	J0403CM2020-11	Globe Regional Justice Court	State of Arizona	Jeremiah Bradish	Jeremiah Bradish/P O Box 1400 Claypool, Az 85532	Warrant letter mailed	8/25/20	Attempted			33	Sellars
8/25/20	Injunction Against Harassment	J0403PO2020-64	Globe Regional Justice Court	Stephanie Johnson	Charles Holley	Charles Holley/5900 N. Main St #57 Globe, Az 85501	Charles Holley/5900 N. Main St #57 Globe, Az 85501	8/25/20	Served				Mancha
8/25/20	Writ of Restitution	J0403CV2020-191	Globe Regional Justice Court	Globe MHP	Matthew Sbragia	Matthew Sbragia/1775 N. Broad St # 72 Globe, Az 85501	None	8/25/20	Attempted				Rodriguez
8/25/20	Writ of Restitution	J0403CV2020-191	Globe Regional Justice Court	Globe MHP	Matthew Sbragia	Matthew Sbragia/1775 N. Broad St # 72 Globe, Az 85501	None	8/25/20	Attempted				Rodriguez
8/25/20	Writ of Restitution	J0403CV2020-191	Globe Regional Justice Court	Globe MHP	Matthew Sbragia	Matthew Sbragia/1775 N. Broad St # 72 Globe, Az 85501	None	8/25/20	Attempted				Rodriguez
8/25/20	Writ of Restitution	J0403CV2020-191	Globe Regional Justice Court	Globe MHP	Matthew Sbragia	Matthew Sbragia/1775 N. Broad St # 72 Globe, Az 85501	Matthew Sbragia/1775 N. Broad St # 72 Globe, Az 85501	8/25/20	Served				Rodriguez
8/25/20	Summons and Complaint	J0403CV2020-178	Globe Regional Justice Court	Midland Credit Management	Shelle Huff	Shelle Huff/8537 S. Springfield Rd Globe, Az 85501	Shelle Huff/8537 S. Springfield Rd Globe, Az 85501	8/25/20	Served				Rodriguez
8/17/20	Child Custody Packet	DO2015-00328	Gila County Superior Court	Megan Wallace	Nelson Ware	Megal Wallace/534 E. Prickly Pear Dr Globe, Az 85501	None	8/26/20	Attempted			18	Mancha
8/14/20	Criminal Subpoena	J0403CR2019-507	Globe Regional Justice Court	State of Arizona	Allen Owens	Protected Information	none	8/26/20	Attempted				Rodriguez

Constable Activity Log - Monthly

Constable: Ruben Mancha

Deputy: Dan Rodriguez
Constable Clerk: Michael Sellars

County: Gila
Precinct: Globe

Total Cases Served/Attempted: 161

Mileage Total: 556

Date Received	Type of Document	Case No.	Court	Plaintiff	Defendant	Address	Person Served/ Served Via	Date Served	Service	Mileage Start	Mileage End	Daily Mileage	Notes & Served By
8/25/20	Subpoena	M0441CT2020-357	Globe Regional Justice Court	State of Arizona	Daniel Jackson Jr	Daniel Jackson Jr/740 W. Sullivan Miami, Az 85539	S. Borunda-MPD/740 W. Sullivan Miami, Az 85539	8/26/20	Served				Rodriguez
8/26/20	Subpoena	J0403CT2020-645	Globe Regional Justice Court	State of Arizona	Charles Mann	Deputy Winget/1100 South St Globe, Az 85501	D. Juhrs-GCSO/1177 E. Monroe St Globe, Az 85501	8/26/20	Served				Rodriguez
8/26/20	Subpoena	J0403CT2020-947	Globe Regional Justice Court	State of Arizona	Omar Thomas	Trooper Voelker/4339 Hwy 60 Miami, Az 85501	Trooper T. Gamboa/4335 E. US Highway 60 Claypool, Az 85501	8/26/20	Served				Rodriguez
8/26/20	Summons and Complaint	J0403CV2020-177	Globe Regional Justice Court	Midland Credit Management	Ylianna Manriquez	Ylianna Manriquez/585 N. Velasco Ave Hayden, Az 85135	None	8/26/20	Attempted				Rodriguez
8/26/20	Summons and Complaint	J0403CV2020-177	Globe Regional Justice Court	Midland Credit Management	Ylianna Manriquez	Ylianna Manriquez/585 N. Velasco Ave Hayden, Az 85135	None	8/26/20	Attempted				Rodriguez
8/25/20	Petition	DO201900311	Gila County Superior Court	Halie Canizales	Mark Barela	Mark Barela/1491 S. Basham Rd Globe, Az 85501	Mark Barela/1491 S. Basham Rd Globe, Az 85501	8/26/20	Served				Rodriguez
8/26/20	Writ of Restitution	J0403CV2020-194	Globe Regional Justice Court	Madera Peak Apartments	Sue McCarthy	Sue McCarthy/1039 E. Saguaro Dr #F35 Globe, Az 85501	Sue McCarthy/1039 E. Saguaro Dr #F35 Globe, Az 85501	8/27/20	Served			13	Mancha
8/27/20	Arrest Warrant	J0403CR2011-724	Globe Regional Justice Court	State of Arizona	Edwin Chatlin	Edwin Chatlin/P O Box 160 San Carlos, Az 85550	Warrant letter mailed	8/27/20	Attempted				Sellars
8/27/20	Arrest Warrant	J403CR2014-613	Globe Regional Justice Court	State of Arizona	Edwin Chatlin	Edwin Chatlin/P O Box 160 San Carlos, Az 85550	Warrant letter mailed	8/27/20	Attempted				Sellars
8/27/20	Order of Protection	J0403PO2020-065	Globe Regional Justice Court	protected Information	Brianne Michelle Herrera	Brianne Herrera/7850 S. Albany Dr, Globe, AZ 85501	Brianne Herrera/7850 S. Albany Dr, Globe, AZ 85501	8/27/20	Served				Mancha
8/28/20	Notice of Non-Renewal	None	None	Service First Realty	Marla Mahaffey	Marla Mahaffey/118 Railroad Ct Globe, Az 85501	none	8/28/20	Attempted				Rodriguez
8/31/20	Injunction Against Harassment	J0403PO2020-66	Globe Regional Justice Court	protected Information	Michael Eastridge	Michael Eastridge/358 N. Stagecoach Trl #11A Roosevelt, Az 85545	none	8/31/20	Attempted			70	Mancha
8/31/20	Injunction Against Harassment	J0403PO2020-67	Globe Regional Justice Court	protected Information	Michael Eastridge	Michael Eastridge/358 N. Stagecoach Trl #11A Roosevelt, Az 85545	none	8/31/20	Attempted				Mancha
8/31/20	Injunction Against Harassment	J0403PO2020-66	Globe Regional Justice Court	protected Information	Michael Eastridge	Michael Eastridge/358 N. Stagecoach Trl #11A Roosevelt, Az 85545	none	8/31/20	Attempted				Rodriguez
8/31/20	Injunction Against Harassment	J0403PO2020-67	Globe Regional Justice Court	protected Information	Michael Eastridge	Michael Eastridge/358 N. Stagecoach Trl #11A Roosevelt, Az 85545	none	8/31/20	Attempted				Rodriguez
8/31/20	Notice of Non-Renewal	None	None	Service First Realty	Marla Mahaffey	Marla Mahaffey/118 Railroad Ct Globe, Az 85501	Marla Mahaffey/118 Railroad Ct Globe, Az 85501	8/31/20	Served				Rodriguez

GILA COUNTY TREASURER'S RECEIPT
GILA COUNTY, ARIZONA

129491 52-28

1 of 2

DATE 9/2/20

CONTRACT #

GRANT #

DEPOSIT TO FUND GENERAL FUND FUND #

REMITTING AGENCY Globe Regional Constable # 321

BILLING PERIOD AUGUST 2020 1 OF 2

Account Code	Direct Deposit / Check #	Revenue Description	Amount	
1005. 321. 3405. 80	CASH		207	00
	2137		64	00
	1910		118	20
	1376		48	00
	5328		56	00
	8521		56	00
	0266		64	00
	0270		136	00
	2135		69	00
	7721		40	00
	1403		64	00
			—	—

Preparer Signature: Michael Lynn Title Clerk

Approved Signature: Title CONSTABLE

SUMMARY OF DEPOSIT

Currency	207
Coins	
Checks	1157.20
Total	1364.20

10X20=200
1X5= 5
2X1= 2
207

TREASURER By Date 9/2/2020

ORIGINATING OFFICE

141355

GILA COUNTY TREASURER'S RECEIPT
GILA COUNTY, ARIZONA

129494

2 of 2

DATE 9/2/20

CONTRACT #

GRANT #

DEPOSIT TO FUND GENERAL FUND FUND #

REMITTING AGENCY Globe Regional Constable # 321

BILLING PERIOD AUGUST 2020

Account Code	Direct Deposit / Check #	Revenue Description	Amount	
1005.321.2405.80	1402		64	00
	7675		40	00
	5451		64	00
	1165		234	00
			1364	20

Preparer Signature: (Michael Lunas) Title Clerk

Approved Signature: R L Mack Title CONSTABLE

SUMMARY OF DEPOSIT

Currency	
Coins	
Checks	
Total	

TREASURER By Date

ORIGINATING OFFICE

141356

ARF-6259 **Consent Agenda Item 5. L.**

Regular BOS Meeting

Meeting Date: 10/06/2020

Reporting Period: Payson Regional Constable's Office Monthly Report for August 2020

Submitted For: Tony McDaniel, Payson Regional Constable

Submitted By: Kimberly Rust, Constable Clerk

Information

Subject

Payson Regional Constable's Office Monthly Report for August 2020

Suggested Motion

Acknowledgment of the August 2020 monthly activity report submitted by the Payson Regional Constable's Office.

Attachments

August 2020

Terry Phillips
Deputy Constable

Kimberly Rust
Clerk of the Constable

Office of
Payson Regional Constable
Tony McDaniel

AUGUST 2020
MONTHLY REPORT

TABLE OF CONTENTS

MONTHLY ACTIVITY LETTER

FEES COLLECTED

CONSTABLE LOG

TREASURER'S RECEIPT

108 WEST MAIN STREET, PAYSON, AZ 85541 – PHONE: (928) 474-3844/FAX: (928) 468-1509

Terry Phillips
Deputy Constable

Kimberly Rust
Constable Clerk

Office of
Payson Regional Constable
Tony McDaniel

September 9, 2020

Gila County Board of Supervisors
1400 East Ash St
Globe AZ 85501

PAYSON REGIONAL CONSTABLE'S OFFICE MONTHLY ACTIVITY LETTER

For the month of **August 2020**, the Payson Regional Constable's Office:

Received a total of 147 papers for service with 200 attempts.

Drove a total of 2748.7 miles.

Collected a total of **$3105.04** as follows:

Total Deposited:	$3,105.04
Less Refunds:	$250.88
Paid to General Fund:	$2,854.16
Additonal Funds from an IGA from the Town of Payson:	$875.00
Grand Total Paid to General Fund:	**$3,729.16**

Respectfully submitted,

Tony McDaniel
Payson Regional Constable
Gila County, Payson, Arizona

108 W Main St Payson Az 85541 / Phone (928)474-3844

Constable Activity Log - Monthly

Constable: Tony McDaniel

Deputy: Terry Phillips
Constable Clerk: Kimberly Rust

County: Gila
Precinct: Payson

Total Cases Served/Attempted: 200

Mileage Total: 2748.7

Date Received	Type of Document	Case No.	Court	Plaintiff	Defendant	Address	Person Served/ Served Via	Date Served	Service	Mileage Start	Mileage End	Daily Mileage	Notes & Served By
7/31/20	Evuction Action Hearing	J0404CV2020000193	Payson Regional Justice Court	Glynn Ross	Dan Stone	Dan Stone / 1001 Bridle Path Ln Payson AZ 85541	Posted & Certified Mailed / 1001 Bridle Path Ln Payson AZ 85541	8/3/20	Served			146.3	McDaniel
8/3/20	Subpoena	M0444CT2020012519	Payson Magistrate Court	State of Arizona	Luis Gutierrez	Officer Brennan / 303 N Beeline HWY Payson AZ 85541	PPD Front Desk Reception / 303 N Beeline HWY Payson AZ 85541	8/3/20	Served				McDaniel
7/24/20	Subpoena	J0404CT2020001234	Payson Regional Justice Court	State of Arizona	Matthew Slavsky	Trooper Montgomery / 201 N Colcord Payson AZ 85541	Trooper Montgomery / Protected Information	8/3/20	Served				McDaniel
7/31/20	Order of Protection	J0404PO2020000128	Payson Regional Justice Court	Protected Information	Sean Levendoski	Sean Levendoski / 606 N Beeline HWY Payson AZ 85541	Sean Levendoski / 606 N Beeline HWY Payson AZ 85541	8/3/20	Served				McDaniel
7/31/20	Order of Protection	J0404PO2020000127	Payson Regional Justice Court	Protected Information	Jordan Anderson	Jordan Anderson / 606 N Beeline HWY Payson AZ 85541	Jordan Anderson / 606 N Beeline HWY Payson AZ 85541	8/3/20	Served				McDaniel
7/31/20	Summons	J0404CM2020000153	Payson Regional Justice Court	State of Arizona	Bradley Jo Hill	Bradley Jo Hill / 4043 Ewing Ranch Rd Tonto Basin AZ 85553	Bradley Jo Hill / 4043 Ewing Ranch Rd Tonto Basin AZ 85553	8/3/20	Served				McDaniel
7/20/20	Summons & Complaint	S0400CV202000207	Gila County Superior Court	William Tindall	Four Season Motorsports Inc	Statutory Agent / 16458 N AZ HWY Payson AZ 85541	Mark Svir / 602 W Summit Payson AZ 85541	8/3/20	Served				McDaniel
8/3/20	Child Custody Packet	DO202000172	Gila County Superior Court	Shelbey Varga	Austin Huffman	Austin Huffman / 115 W McKamey #C Payson AZ 85541	None	8/3/20	Attempted				McDaniel
8/3/20	Child Custody Packet	DO202000172	Gila County Superior Court	Shelbey Varga	Austin Huffman	Austin Huffman / 714 S Beeline HWY Payson AZ 85541	Austin Huffman / 714 S Beeline HWY Payson AZ 85541	8/3/20	Served				McDaniel
8/4/20	Summons	M0444CM2020012251	Payson Magistrate Court	State of Arizona	Jamie McCabe	Jamie McCabe / 306 E Wade Ln Payson AZ 85541	Jamie McCabe / 306 E Wade Ln Payson AZ 85541	8/4/20	Served			170.1	McDaniel
8/4/20	Subpoena	M0444CT2020012563	Payson Magistrate Court	State of Arizona	Steven Ryan	Officer Oldeschulte / 303 N Beeline HWY Payson A z85541	PPD Front Desk Reception / 303 N Beeline HWY Payson AZ 85541	8/4/20	Served				McDaniel
8/4/20	Summons	J0404TR2020000121	Payson Regional Justice Court	State of Arizona	Eva Kathleen Porter	Eva Kathleen Porter / 198 E Nip N Tuck Tonto Basin AZ 85553	Eva Kathleen Porter / 198 E Nip N Tuck Tonto Basin AZ 85553	8/4/20	Served				McDaniel
8/3/20	Subpoena	2019CR141	Payson Regional Justice Court	State of Arizona	April Mouritsen	Carolyn Mouritsen / Protected Information	Carolyn Mouritsen / Protected Information	8/4/20	Served				McDaniel
8/3/20	Subpoena	2019CR141	Payson Regional Justice Court	State of Arizona	April Mouritsen	Justin Bartlett / Protected Information	Justin Bartlett / Protected Information	8/4/20	Served				McDaniel
8/3/20	Subpoena	2019CR141	Payson Regional Justice Court	State of Arizona	April Mouritsen	Detective Marchesseault / 108 W Main St Payson AZ 85541	Detective Marchesseault / 108 W Main St Payson AZ 85541	8/4/20	Served				McDaniel
8/3/20	Subpoena	2019CR141	Payson Regional Justice Court	State of Arizona	April Mouritsen	Deputy Dirks / 108 W Main St Payson AZ 85541	Deputy Dirks / 108 W Main St Payson AZ 85541	8/4/20	Served				McDaniel
8/3/20	Subpoena	2019CR141	Payson Regional Justice Court	State of Arizona	April Mouritsen	Deputy Hishstreet / 108 W Main St Payson AZ 85541	GCSO Clipboard, Mailbox, Email / 108 W Main St Payson AZ 85541	8/4/20	Served				McDaniel
8/3/20	Subpoena	2019CR141	Payson Regional Justice Court	State of Arizona	April Mouritsen	Sgt Engler / 108 W Main St Payson AZ 85541	GCSO Clipboard, Mailbox, Email / 108 W Main St Payson AZ 85541	8/4/20	Served				McDaniel
8/3/20	Subpoena	2019CM351	Payson Regional Justice Court	State of Arizona	Crystal Saunders	Trinity Chick / Protected Information	None	8/4/20	Attempted				McDaniel

Constable Activity Log - Monthly

Constable: Tony McDaniel

Deputy: Terry Phillips
Constable Clerk: Kimberly Rust

County: Gila
Precinct: Payson

Total Cases Served/Attempted: 200

Mileage Total: 2748.7

Date Received	Type of Document	Case No.	Court	Plaintiff	Defendant	Address	Person Served/ Served Via	Date Served	Service	Mileage Start	Mileage End	Daily Mileage	Notes & Served By
8/3/20	Subpoena	2019CM351	Payson Regional Justice Court	State of Arizona	Crystal Saunders	Trinity Chick / Protected Information	Trinity Chick / Protected Information	8/4/20	Served				McDaniel
8/3/20	Subpoena	2019CM351	Payson Regional Justice Court	State of Arizona	Crystal Saunders	Angelique Kaminski / Protected Information	Angelique Kaminski / Protected Information	8/4/20	Served				McDaniel
8/3/20	Subpoena	2019CM351	Payson Regional Justice Court	State of Arizona	Crystal Saunders	Deputy Travis / 108 W Main St Payson AZ 85541	GCSO Clipboard, Mailbox, Email / 108 W Main St Payson AZ 85541	8/4/20	Served				McDaniel
8/3/20	Subpoena	2019CM351	Payson Regional Justice Court	State of Arizona	Crystal Saunders	Deputy Cross / 108 W Main St Payson AZ 85541	GCSO Clipboard, Mailbox, Email / 108 W Main St Payson AZ 85541	8/4/20	Served				McDaniel
8/3/20	Subpoena	2019CM351	Payson Regional Justice Court	State of Arizona	Crystal Saunders	Deputy Thomason / 108 W Main St Payson AZ 85541	GCSO Clipboard, Mailbox, Email / 108 W Main St Payson AZ 85541	8/4/20	Served				McDaniel
8/3/20	Subpoena	2019CM351	Payson Regional Justice Court	State of Arizona	Crystal Saunders	Sgt Binney / 108 W Main St Payson AZ 85541	GCSO Clipboard, Mailbox, Email / 108 W Main St Payson AZ 85541	8/4/20	Served				McDaniel
8/4/20	Order of Protection	J0404PO20200001 29	Payson Regional Justice Court	Protected Information	Joseph Corrigan	Joseph Corrigan / 401 S Mariposa St Payson AZ 85441	Joseph Corrigan / 401 S Mariposa St Payson AZ 85441	8/4/20	Served				McDaniel
8/4/20	Quick Claim Deed	None	None	Javelina Sky Development	Philip Kelly	Philip Kelly / 4404 N Eagle Feather Cir Pine AZ 85544	None	8/4/20	Attempted				McDaniel
8/4/20	Quick Claim Deed	None	None	Javelina Sky Development	Philip Kelly	Philip Kelly / 4404 N Eagle Feather Cir Pine AZ 85544	None	8/5/20	Attempted			91.2	McDaniel
8/5/20	Subpoena	J0404CT20190060 96	Payson Regional Justice Court	State of Arizona	Gerald Foster	Trooper Harold / 201 N Colcord Payson AZ 85541	Emailed Sgt Manjarress & Trooper	8/5/20	Served				McDaniel
8/5/20	Arraignment Hearing Notice	M0444CM2020012 226	Payson Magistrate Court	State of Arizona	Bret Arthur Thornton	Bret Arthur Thornton / 1305 N Heather Cir Payson AZ 85541	None	8/5/20	Attempted				McDaniel
8/5/20	Pretrial Conference Hearing Notice	M0444CM2020012 048	Payson Magistrate Court	State of Arizona	Jacob Waechter	Jacob Waechter / 600 W Bridle Path Ln Payson AZ 85541	Jacob Waechter / 600 W Bridle Path Ln Payson AZ 85541	8/5/20	Served				McDaniel
8/4/20	Civil Subpoena	DO201100087	Gila County Superior Court	tiffany Huddlestun	Brandon Conti	Officer Evans / 108 W Main St Payson AZ 85541	Officer Evans / 108 W Main St Payson AZ 85541	8/5/20	Served				McDaniel
8/4/20	Termination of Month to Month Tenancy	None	None	The Owens Law Firm	Cato Nevarez Esquivel / Lorena Nevarez	Cato Nevarez Esquivel & Lorena Nevarez / 3788 N AZ HWY 87 #C Pine AZ 85541	Unidentified Woman / 3788 N HWY 87 Pine AZ 8554	8/5/20	Served				McDaniel
8/5/20	Notice of Supervening	CR2020-313	Gila County Superior Court	State of Arizona	Conie Augie Rivera III	Conie Augie Rivera III / 108 W Main St Payson AZ 85541	Conie Augie Rivera III / 108 W Main St Payson AZ 85541	8/5/20	Served				McDaniel
8/5/20	Summons	M0444TR2020012 102	Payson Magistrate Court	State of Arizona	Sean Mosher	Sean Mosher / 1210 N Ponderosa Cir Payson AZ 85541	None	8/5/20	Attempted				McDaniel
8/5/20	Summons	M0444TR2020012 102	Payson Magistrate Court	State of Arizona	Sean Mosher	Sean Mosher / 714 S Beeline HWY Payson AZ 85541	Sean Mosher / 714 S Beeline HWY Payson AZ 85541	8/6/20	Served			119.2	McDaniel
8/6/20	Summons	J0404CM20200001 57	Payson Regional Justice Court	State of Arizona	Abelardo Dagnino	Abelardo Dagnino / TAR 9 Payson AZ 85541	None	8/6/20	Attempted				TAR Officer Van Camp
8/6/20	Summons	J0404CM20200001 57	Payson Regional Justice Court	State of Arizona	Abelardo Dagnino	Abelardo Dagnino / TAR 20 Payson AZ 85541	Abelardo Dagnino / TAR 20 Payson AZ 85541	8/6/20	Served				TAR Officer Van Camp

Constable Activity Log - Monthly

Constable: Tony McDaniel

County: Gila
Precinct: Payson

Deputy: Terry Phillips
Constable Clerk: Kimberly Rust

Total Cases Served/Attempted: 200

Mileage Total: 2748.7

Date Received	Type of Document	Case No.	Court	Plaintiff	Defendant	Address	Person Served/ Served Via	Date Served	Service	Mileage Start	Mileage End	Daily Mileage	Notes & Served By
8/6/20	Ruling on Motion	2020CT12314	Payson Magistrate Court	State of Arizona	Richard Likins	Officer Brennan / 303 N Beeline HWY Payson AZ 85541	PPD Front Desk Reception / 303 N Beeline HWY Payson AZ 85541	8/6/20	Served				McDaniel
7/27/20	Amended Order of Protection	J0404PO020000110	Payson Regional Justice Court	Protected Information	Brock Beattie	Brock Beattie / 108 W Main St Payson AZ 85541	Brock Beattie / 108 W Main St Payson AZ 85541	8/6/20	Served				McDaniel
8/6/20	Divorce Packet	DO02000175	Gila County Superior Court	Erin Beebe	Keanna Silverwood	Keanna Silverwood / 309 N Heritage Ln Payson AZ 85541	Keanna Silverwood / 309 N Heritage Ln Payson AZ 85541	8/6/20	Served				McDaniel
8/6/20	Subpoena	S0900DO0080211	Navajo County Superior Court	Cody Newman	Tauni Newman	Wells Fargo Banl N.A. / 115 E HWY 260 Payson AZ 85541	Mickenzie Reed /115 E HWY 260 Payson AZ 85541	8/6/20	Served				McDaniel
8/6/20	Child Custody Packet	DO201500261	Gila County Superior Court	Joseph Williams	Taira Gaskill, Carol Marchak, Brianna Bowman	Joseph Williams / 602 N Ponderosa Cir #B Payson AZ 85541	Joseph Williams / 602 N Ponderosa Cir #B Payson AZ 85541	8/6/20	Served				McDaniel
8/6/20	Subpoena	S0900DO0080211	Navajo County Superior Court	Cody Newman	Tauni Newman	National Bank of Arizona / 804 S Beeline HWY Payson AZ 85541	Andrew Strader / 804 S Beeline HWY Payson AZ 85541	8/6/20	Served				McDaniel
8/6/20	Summons	M0444CM20200012258	Payson Magistrate Court	State of Arizona	John Walker	John Walker / 1139 W Gunsight Ridge Payson AZ 85541	None	8/6/20	Attempted				McDaniel
8/6/20	Injunction Against Harassment	J0404PO2020000130	Payson Regional Justice Court	Protected Information	Mark Guthrie	Mark Guthrie / 105 E McKamey #B Payson AZ 85541	None	8/6/20	Attempted				McDaniel
8/6/20	Injunction Against Harassment	J0404PO2020000130	Payson Regional Justice Court	Protected Information	Mark Guthrie	Mark Guthrie / 105 E McKamey #B Payson AZ 85541	Mark Guthrie / 105 E McKamey #B Payson AZ 85541	8/6/20	Served				McDaniel
8/6/20	Summons & Complaint	CV20013922	Pima County Consolidated Justice Court	Creative Car Credit LLC	Whitney Lobina	Whitney Lobina / 618 N Ponderosa Cir #3 Payson AZ 85541	None	8/6/20	Attempted				McDaniel
8/6/20	Civil Citation	COD20-00214	Mesa Civil Hearing Office	City Of Mesa	Donald Flowers & Robbin McKinion	Donadl Flowers & Robbin McKinion / 383 Old Meadow Ln Payson AZ 85541	Robbin McKinion / 383 Old Meadow Ln Payson AZ 85541	8/6/20	Served				McDaniel
8/6/20	Summons	M0444CM20200012257	Payson Magistrate Court	State of Arizona	April Barrett Mouritsen	April Barrett Mouritsen / 2500 W. Bull Dr. Payson AZ 85541	None	8/6/20	Attempted				McDaniel
8/6/20	Summons	M0444CM20200012257	Payson Magistrate Court	State of Arizona	April Barrett Mouritsen	April Barrett Mouritsen / 310 E. Garrels Dr. Star Valley AZ 85541	None	8/6/20	Attempted				McDaniel
8/6/20	Summons	M0444CM20200012257	Payson Magistrate Court	State of Arizona	April Barrett Mouritsen	April Barrett Mouritsen / 98 E. Quail Hollow Dr. Star Valley AZ 85541	None	8/6/20	Attempted				McDaniel
8/6/20	Summons	M0444CM20200012259	Payson Magistrate Court	State of Arizona	Edward Montano	Edward Montano / 6494 W Randall Pl Pine, AZ 85544	None	8/7/20	Attempted			149.2	McDaniel
8/6/20	Summons	M0444CM20200012259	Payson Magistrate Court	State of Arizona	Edward Montano	Edward Montano / 6494 W Randall Pl Pine, AZ 85544	None	8/7/20	Attempted				McDaniel
8/6/20	Summons	M0444CM20200012257	Payson Magistrate Court	State of Arizona	April Barrett Mouritsen	April Barrett Mouritsen / 310 E. Garrels Dr. Star Valley AZ 85541	April Barrett Mouritsen / 310 E. Garrels Dr. Star Valley AZ 85541	8/7/20	Served				McDaniel
8/7/20	Notice of Hearing	M0444TR2020012107	Payson Magistrate Court	State of Arizona	Phillip Swartz	Phillips Swartz / 2801 W. Nicklaus Dr. Payson AZ 85541	Phillips Swartz / 2801 W. Nicklaus Dr. Payson AZ 85541	8/7/20	Served				McDaniel
8/6/20	Injunction Against Harassment	J0404PO2020000131	Payson Justice Court	Protected Information	Timothy Schrowang	Timothy Schrowang / 256 N. Dessie LN Tonto Basin AZ 85553	None	8/7/20	Attempted				McDaniel

Constable Activity Log - Monthly

Constable: Tony McDaniel

Deputy: Terry Phillips
Constable Clerk: Kimberly Rust

County: Gila
Precinct: Payson

Total Cases Served/Attempted: 200

Mileage Total: 2748.7

Date Received	Type of Document	Case No.	Court	Plaintiff	Defendant	Address	Person Served/ Served Via	Date Served	Service	Mileage Start	Mileage End	Daily Mileage	Notes & Served By
8/4/20	Quick Claim Deed	None	None	Javelina Sky Development	Philip Kelly	Philip Kelly / 4404 N Eagle Feather Cir Pine AZ 85544	None	8/7/20	Attempted				McDaniel
8/10/20	Subpoena	J0404CT2020001477	Payson Regional Justice Court	State of Arizona	Richard Verri	Trooper R. Shupe / 201 N. Colcord Payson AZ 85541	Sgt Manjarres & Trooper / Email	8/10/20	Served			66.8	McDaniel
8/10/20	Subpoena	M0444CT2020012548	Payson Magistrate Court	State of Arizona	Alexander Soto	Off. Dunston / 303 N. Beeline Hwy Payson AZ 85541	PPD Front Desk Reception / 303 N Beeline HWY Payson AZ 85541	8/10/20	Served				McDaniel
8/10/20	Subpoena	M0444CT2020012581	Payson Magistrate Court	State of Arizona	Jaron Reece	Off. Oldeshulte / 303 N. Beeline Hwy Payson AZ 85541	PPD Front Desk Reception / 303 N Beeline HWY Payson AZ 85541	8/10/20	Served				McDaniel
8/6/20	Workplace Injunction Against Harassment	J0404PO2020000131	Payson Regional Justice Court	Protected Information	Timothy Schrowang	Timothy Schrowang / 256 N. Dessie LN Tonto Basin AZ 85553	Timothy Schrowang / 108 W. Main ST. Payson AZ 85541	8/10/20	Served				McDaniel
8/10/10	Bailiff	None	Payson Regional Justice Court	N/A	N/A	714 S. Beeline Hwy / Payson AZ 85541	N/A	8/10/20	Bailiff				McDaniel
8/10/20	Letter	N/A	N/A	Town of Star Valley	Mark Nelson	Mark Nelson / 74 Sky Run Lane Star Valley AZ 85541	Mark Nelson / 74 Sky Run Lane Star Valley AZ 85541	8/10/20	Served				McDaniel
8/10/20	Order of Protection	P1300PO202000131	Yavapai County Superior Court	Protected Information	Calvin Wolfswinkel	Calvin Wolfswinkel / 436 W Frontier St Payson AZ 85541	Calvin Wolfswinkel / 436 W Frontier St Payson AZ 85541	8/10/20	Served				McDaniel
8/7/20	Child Support Packet	DO20050136	Gila County Superior Court	Dallas Randall	Jennifer Randall	Dallas Randall / 100 S Beeline HWY Payson AZ 85541	Dallas Randall / 100 S Beeline HWY Payson AZ 85541	8/10/20	Served				McDaniel
8/10/20	Notice to Appear; Petition	JV202000098	Gila County Superior Court	State of Arizona	Protected Information	Protected Information	Protected Information	8/10/20	Served				McDaniel
8/10/20	Notice to Appear; Petition	JV202000098	Gila County Superior Court	State of Arizona	Protected Information	Amy Beniche / Protected Information	Amy Beniche / Protected Information	8/10/20	Served				McDaniel
7/27/20	Injunction Against Harassment	J0404PO2020000124	Payson Regional Justice Court	Protected Information	Scott Trevey	Scott Trevey / 136 N Pinon Rd Star Valley AZ 85541	Scott Trevey / 136 N Pinon Rd Star Valley AZ 85541	8/10/20	Served				McDaniel
8/6/20	Summons	M0444CM2020012259	Payson Magistrate Court	State of Arizona	Edward Montano	Edward Montano / 6494 W Randall Pl Pine, AZ 85544	None	8/11/20	Attempted			99.2	McDaniel
8/7/20	Criminal Subpoena	CR2019456	Gila County Superior Court	State of Arizona	Alexandra Frausto	Officer Castaneda / 303 N Beeline HWY Payson AZ 85541	PPD Front Desk Reception / 303 N Beeline HWY Payson AZ 85541	8/11/20	Served				McDaniel
8/7/20	Criminal Subpoena	CR2019456	Gila County Superior Court	State of Arizona	Alexandra Frausto	Detective Cadwell / 303 N Beeline HWY Payson AZ 85541	PPD Front Desk Reception / 303 N Beeline HWY Payson AZ 85541	8/11/20	Served				McDaniel
8/7/20	Criminal Subpoena	CR2019456	Gila County Superior Court	State of Arizona	Alexandra Frausto	Sgt Hansen / 303 N Beeline HWY Payson AZ 85541	PPD Front Desk Reception / 303 N Beeline HWY Payson AZ 85541	8/11/20	Served				McDaniel
8/11/20	Order of Protection	J0404PO2020000132	Payson Regional Justice Court	Protected Information	Victoria Bird	Victoria Bird / 110 W Roundup Rd Payson AZ 85541	Victoria Bird / 110 W Roundup Rd Payson AZ 85541	8/11/20	Served				McDaniel
8/11/20	Summons & Complaint	S0400CV202000225	Gila County Superior Court	Phmartista LLC	Susan Walker	Susan Walker / 2801 W Bulla Dr Payson AZ 85541	Susan Walker / 2801 W Bulla Dr Payson AZ 85541	8/11/20	Served				McDaniel
8/11/20	Summons & Complaint	S0400CV202000225	Gila County Superior Court	Phmartista LLC	Susan Walker	Christopher Walker / 2801 W Bulla Dr Payson AZ 85541	None	8/11/20	Attempted				McDaniel

Constable Activity Log - Monthly

Constable: Tony McDaniel

Deputy: Terry Phillips
Constable Clerk: Kimberly Rust

County: Gila
Precinct: Payson

Total Cases Served/Attempted: 200

Mileage Total: 2748.7

Date Received	Type of Document	Case No.	Court	Plaintiff	Defendant	Address	Person Served/ Served Via	Date Served	Service	Mileage Start	Mileage End	Daily Mileage	Notes & Served By
8/1120	Order of Protection	M0747PO2020009580	Glendale City Court	Protected Information	Katharine Humphrey	Katharine Humphrey / 1107 S McClane Rd #43 Payson AZ 85541	None	8/11/20	Attempted				McDaniel
8/12/20	Subpoena	M0444CT2020012457	Payson Magistrate Court	State of Arizona	Elizabeth Weinbrenner	Officer Bathke / 303 N Beeline HWY Payson AZ 85541	PPD Front Desk Reception / 303 N Beeline HWY Payson AZ 85541	8/12/20	Served			91.5	McDaniel
8/10/20	Divorce Packet	DO202000182	Gila County Superior Court	Casey Stluka	Chad Stluka	Chad Stluka / 930 Christopher Creek Loop Payson AZ 85541	Chad Stluka / 930 Christopher Creek Loop Payson AZ 85541	8/12/20	Served				McDaniel
8/12/20	Divorce Packet	FN2017-052485	Maricopa County Superior Court	Carson Mason	Tresa Mason	Carson Mesa / 8034 W Lufkin Dr Strawberry AZ 85544	Carson Mesa / 8034 W Lufkin Dr Strawberry AZ 85544	8/13/20	Attempted			194.6	McDaniel
8/13/20	Small Claims Complaint	CV2020-166	Payson Regional Justice Court	Amber DeWitt	Beth & Charles Lauer	Beth & Charles Lauer / 3853 N HWY 87 #A Pine AZ 85544	Charles Lauer / 3853 N HWY 87 #A Pine AZ 85544	8/13/20	Served				McDaniel
8/13/20	Agnecy Assist	S0400CV202000208	Gila County Superior Court	Assisted the Gila County Sheriff's Office in a Writ of Restitution				8/13/20	Assisted				McDaniel
8/13/20	Child Custody Packet	20DR1039	Jefferson County District Court Colorado	David Hebel	Brittni Enfante	Brittni Enfante / 200 E Malibue Dr #D3 Payson AZ 85541	None	8/13/20	Attempted				McDaniel
8/13/20	Child Custody Packet	20DR1039	Jefferson County District Court Colorado	David Hebel	Brittni Enfante	Brittni Enfante / 200 E Malibue Dr #D3 Payson AZ 85541	Brittni Enfante / 200 E Malibue Dr #D3 Payson AZ 85541	8/13/20	Served				Phillips
8/14/20	Subpoena	J0404CT2020001324	Payson Regional Justice Court	State of Arizona	Jeeremy Nealon	Triooper Rutherford / 201 N Colocrd Payson AZ 85541	Emailed Sgt Manjarress & Trooper	8/14/20	Served			171.7	McDaniel
8/14/20	Subpoena	J0404CT2020001459	Payson Regional Justice Court	State of Arizona	Patrick Trujillo	Trooper Harold / 201 N Colcord Payson AZ 85541	Emailed Sgt Manjarress & Trooper	8/14/20	Served				McDaniel
8/14/20	Subpoena	M0444CT2020012548	Payson Magistrate Court	State of Arizona	Alexander Soto	Officer Dunston / 303 N Beeline HWY Payson AZ 85541	PPD Front Desk Reception / 303 N Beeline HWY Payson AZ 85541	8/14/20	Served				Phillips
8/14/20	Subpoena	M0444CT2020012581	Payson Magistrate Court	State of Arizona	Jaron Reece	Officer Oldeschulte / 303 N Beeline HWY Payson A z85541	PPD Front Desk Reception / 303 N Beeline HWY Payson AZ 85541	8/14/20	Served				Phillips
8/14/20	Anser & Counter Claim	CV2020-180	Payson Regional Justice Court	Pearl & Michael Manasseri	Tony Vlahopoulos	Pearl & Michael Manasseri / 305 W Christopher Pt Payson AZ 85541	Pearl Manasseri / 305 W Christopher Pt Payson AZ 85541	8/14/20	Served				Phillips
8/14/20	Civil Standby	P0400PO202000045	Gila County Superior Court	Civil Standby bewteen Judith & Eugene Intrieri 1.25 hours			11105 N Houston Mesa Rd Payson AZ 85541	8/14/20	Served				Phillips
8/17/20	Criminal Subpoena	CR2020130	Gila County Superior Court	State of Arizona	Clinton Randall	Detective Johnson / 303 N Beeline HWY Payson AZ 85541	PPD Front Desk Reception / 303 N Beeline HWY Payson AZ 85541	8/17/20	Served			87.6	McDaniel
8/17/20	Evuction Action Hearing	J0404CV2020000210	Payson Regional Justice Court	John Handka	Evelyn Plante	Evelyn Plante / 8120 W Mascalero Rd Payson AZ 85541	Evelyn Plante / 8120 W Mascalero Rd Payson AZ 85541	8/17/20	Served				McDaniel
8/17/20	Motion & Appeal	J0404PO2020000125	Payson Regional Justice Court	Protected Information	Mike Manasseri	Protected Information	Protected Information	8/17/20	Served				McDaniel
8/17/20	Summons & Complaint	2020CV189	Payson Regional Justice Court	LVNV Funding LLC	Roger Boegeman & J. Doe	Roger Boegeman & J. Doe / 4432 N Manzanita Cir #C Payson AZ 85544	Roger Boegeman / 4432 N Manzanita Cir #C Payson AZ 85544	8/17/20	Served				McDaniel
8/17/20	Summons & Complaint	2020CV191	Payson Regional Justice Court	LVNV Funding LLC	Scott Sours	Scott Sours / 408 S Mariposa St AZ 85541	None	8/17/20	Attempted				McDaniel

Constable Activity Log - Monthly

Constable: Tony McDaniel

Deputy: Terry Phillips
Constable Clerk: Kimberly Rust

County: Gila
Precinct: Payson

Total Cases Served/Attempted: 200

Mileage Total: 2748.7

Date Received	Type of Document	Case No.	Court	Plaintiff	Defendant	Address	Person Served/ Served Via	Date Served	Service	Mileage Start	Mileage End	Daily Mileage	Notes & Served By
8/17/20	Summons & Complaint	2020CV190	Payson Regional Justice Court	LVNV Funding LLC	Susan Sours	Susan Sours / 408 S Mariposa St Payson AZ 85541	None	8/17/20	Attempted				McDaniel
8/17/20	Summons & Complaint	2020CV191	Payson Regional Justice Court	LVNV Funding LLC	Scott Sours	Scott Sours / 408 S Mariposa St AZ 85541	Scott Sours / 408 S Mariposa St AZ 85541	8/18/20	Served			148.0	McDaniel
8/17/20	Summons & Complaint	2020CV190	Payson Regional Justice Court	LVNV Funding LLC	Susan Sours	Susan Sours / 408 S Mariposa St Payson AZ 85541	Susan Sours / 408 S Mariposa St Payson AZ 85541	8/18/20	Served				McDaniel
8/18/20	Injunction Against Harassment	J0404PO20200001 33	Payson Regional Justice Court	Protected Information	Andrea Lavender	Andrea Lavender / 602 S Colcord Rd #3 Payson AZ 85541	Andrea Lavender / 602 S Colcord Rd #3 Payson AZ 85541	8/18/20	Served				McDaniel
8/18/20	Zoning Violation	CP1909-004	Community Development	Gila County Planning & Zoning	Jason Enyart	Jason Enyart / 714 W Oak Rd Pine AZ 85544	Jason Enyart / 714 W Oak Rd Pine AZ 85544	8/18/20	Served				McDaniel
8/18/20	Injunction Against Harassment	J0404PO20200001 34	Payson Regional Justice Court	Protected Information	Joseph Terborg	Joseph Terborg / 1305 N Beeline HWY Payson AZ 85541	None	8/18/20	Attempted				McDaniel
8/18/20	Injunction Against Harassment	J0404PO20200001 34	Payson Regional Justice Court	Protected Information	Joseph Terborg	Joseph Terborg / 1305 N Beeline HWY Payson AZ 85541	Joseph Terborg / 1305 N Beeline HWY Payson AZ 85541	8/18/20	Served				McDaniel
8/18/20	Zoning Violation	CP2003-004	Community Development	Gila County Planning & Zoning	Michael Myers	Michael Meyers / 533 N Pioneer Pass Payson AZ 85541	Michael Meyers / 533 N Pioneer Pass Payson AZ 85541	8/18/20	Served				McDaniel
8/18/20	Zoning Violation	CP2002-009	Community Development	Gila County Planning & Zoning	Brooklyn Cortes & Bradley Hill	Brooklyn Cortes & Bradley Hill / 122 N Shadow Creek Trl Tonto Basin AZ 85553	None	8/18/20	Attempted				McDaniel
8/18/20	Zoning Violation	CP2003-005	Community Development	Gila County Planning & Zoning	William & Tracy Scott	William & Tracy Scott / 4615 N Pine Creek Canyon Rd Payson AZ 85541	None	8/18/20	Attempted				McDaniel
8/18/20	Zoning Violation	CP2003-006	Community Development	Gila County Planning & Zoning	Matthew Dixson	Matthew Dixson / 3737 N Ellison Pine AZ 85541	None	8/18/20	Attempted				McDaniel
8/18/20	Petition	1911AC07661	11th Judicial Circuit St Charles County Missouri	J&M Securities	Marcus Erves	Marcus Erves / 301 N McLane Rd #H Payson AZ 85541	None	8/19/20	Attempted			153.0	McDaniel
8/18/20	Summons & Complaint	2020CV198UN	Payson Regional Justice Court	LVNV Funding LLC	Mary Carrera & J. Doe	Mary Carrera & J. Doe / 814 E Park Dr Payson AZ 85541	None	8/19/20	Attempted				McDaniel
8/18/20	Summons & Complaint	2020CV198UN	Payson Regional Justice Court	LVNV Funding LLC	Mary Carrera & J. Doe	Mary Carrera & J. Doe / 962 W Oxbow Trl #M Payson AZ 85541	None	8/19/20	Attempted				McDaniel
8/18/20	Summons & Complaint	2020CV198UN	Payson Regional Justice Court	LVNV Funding LLC	Mary Carrera & J. Doe	Mary Carrera & J. Doe / 962 W Oxbow Trl #M Payson AZ 85541	None	8/19/20	Attempted				McDaniel
8/18/20	Summons & Complaint	2020CV199OV	Payson Regional Justice Court	LVNV Funding LLC	Alannah Saunders	Alannah Saunders / 609 E McKamey St Payson AZ 85541	None	8/19/20	Attempted				McDaniel
8/18/20	Summons & Complaint	2020CV199OV	Payson Regional Justice Court	LVNV Funding LLC	Alannah Saunders	Alannah Saunders / 609 E McKamey St Payson AZ 85541	Alannah Saunders / 609 E McKamey St Payson AZ 85541	8/19/20	Served				McDaniel
8/18/20	Zoning Violation	CP2002-009	Community Development	Gila County Planning & Zoning	Brooklyn Cortes & Bradley Hill	Brooklyn Cortes & Bradley Hill / 411 S Beeline HWY Payson AZ 85541	Brooklyn Cortes Hill / 411 S Beeline HWY Payson AZ 85541	8/19/20	Served				McDaniel
8/19/20	Delivery of Documents	None	Payson Regional Justice Court	Constable Delivered Court Documents to the Plaintiff as Hearing was Telephonic				8/19/20	Delivered				McDaniel

Constable Activity Log - Monthly

Constable: Tony McDaniel

Deputy: Terry Phillips
Constable Clerk: Kimberly Rust

County: Gila
Precinct: Payson

Total Cases Served/Attempted: 200

Mileage Total: 2748.7

Date Received	Type of Document	Case No.	Court	Plaintiff	Defendant	Address	Person Served/ Served Via	Date Served	Service	Mileage Start	Mileage End	Daily Mileage	Notes & Served By
8/19/20	Injunction Against Harassment	J0404PO2020000135	Payson Regional Justice Court	Protected Information	Brandy Myers	Brandy Myers / 300 W Frontier St #28 Payson AZ 85541	Brandy Myers / 300 W Frontier St #28 Payson AZ 85541	8/19/20	Served				McDaniel
6/2/20	Order of Protection	J0404PO2020000094	Payson Regional Justice Court	Protected Information	Mollie Scott	Mollie Scott / In Forest Pine AZ 85544	Mollie Scott / SR 87 MP 266 100 Yards East of HWY Pine AZ 85544	8/19/20	Served				McDaniel
8/18/20	Zoning Violation	CP2003-005	Community Development	Gila County Planning & Zoning	William & Tracy Scott	William & Tracy Scott / 4615 N Pine Creek Canyon Rd Payson AZ 85541	Tracy Scott / 4615 N Pine Creek Canyon Rd Payson AZ 85541	8/19/20	Served				McDaniel
8/18/20	Petition, Hearing, Summons	CV01-20-12012	4th Judicial District of State of Idaho for ADA County	Idaho State	Protected Information	Christopher Pope / 612 E Luke Dr Payson AZ 85541	None	8/19/20	Attempted				McDaniel
8/18/20	Summons & Complaint	2020CV200UN	Payson Regional Justice Court	CACH LLC	Jan Ferguson	Jan Ferguson / 201 W Corral Dr Payson AZ 85541	None	8/19/20	Attempted				McDaniel
8/18/20	Summons & Complaint	2020CV198UN	Payson Regional Justice Court	LVNV Funding LLC	Mary Carrera & J. Doe	Mary Carrera & J. Doe / 962 W Oxbow Trl #2 Payson AZ 85541	Marry Carrera / 962 W Oxbow Trl #2 Payson AZ 85541	8/20/20	Served			86.9	Phillips
8/20/20	Summons	M0444CM2020012256	Payson Magistrate Court	State of Arizona	Wesley White	Wesley White / 1303 N MCLane #A Payson AZ 85541	None	8/20/20	Attempted				Phillips
8/20/20	Summons	M0444CM2020012256	Payson Magistrate Court	State of Arizona	Wesley White	Wesley White / 1102 W Saddle Ln Payson AZ 85541	Wesley White / 1102 W Saddle Ln Payson AZ 85541	8/20/20	Served				Phillips
8/20/20	Order to Appear; Petition for Contempt	DO2018-00232	Gila County Superior Court	Aeyim Kim McCarthy	James McCarthy	Aeyim Kim McCarthy / 512 S Mud Springs Rd Payson AZ 85541	Aeyim Kim McCarthy / 512 S Mud Springs Rd Payson AZ 85541	8/20/20	Served				Phillips
8/18/20	Zoning Violation	CP2003-006	Community Development	Gila County Planning & Zoning	Matthew Dixson	Matthew Dixson / 110 E HWY 260 Payson AZ 85541	Matthew Dixson / 110 E HWY 260 Payson AZ 85541	8/20/20	Served				McDaniel
8/18/20	Summons & Complaint	2020CV200UN	Payson Regional Justice Court	CACH LLC	Jan Ferguson	Jan Ferguson aka McMurren / 616 S Beeline HWY Payson AZ 85541	Jan Ferguson aka McMurren / 616 S Beeline HWY Payson AZ 85541	8/20/20	Served				McDaniel
8/18/20	Summons & Complaint	2020CV181	Payson Regional Justice Court	LVNV Funding LLC	Tiffinnie Marrs	Tiffinnie Marrs / 359 W Haigler Ln Young AZ 85554	Tiffinnie Marrs / 359 W Haigler Ln Young AZ 85554	8/20/20	Served				Phillips
8/20/20	Summons	M0444TR2020012103	Payson Magistrate Court	State of Arizona	Jason Estrella	Jason Estrella / 903 W Summit St Payson AZ 85541	None	8/20/20	Attempted				McDaniel
8/20/20	Summons	M0444TR2020012123	Payson Magistrate Court	State of Arizona	Jason Estrella	Jason Estrella / 903 W Summit St Payson AZ 85541	None	8/20/20	Attempted				McDaniel
8/20/20	Order of Protection	P0400PO2020000050	Gila County Superior Court	Protected Information	Jerry Morris	Jerry Morris / 345 E Garrels Dr Payson AZ 85541	Jerry Morris / Evening Prim Rose #752 Payson AZ 85541	8/21/20	Served			173.7	Phillips
8/21/20	Child Custody Packet	DO202000190	Gila County Superior Court	Troy Yocum	Nevaeh Guerrero	Nevaeh Guerrero / 905 S McLane Rd #22 Payson AZ 85541	Nevaeh Guerrero / 905 S McLane Rd #22 Payson AZ 85541	8/21/20	Served				Phillips
8/21/20	Summons	J0404CM2020000166	Payson Regional Justice Court	State of Arizona	Savannah Shill	Savannah Shill / 707 N Easy St Payson AZ 85541	None	8/21/20	Attempted				Phillips
8/20/20	Summons	M0444TR2020012103	Payson Magistrate Court	State of Arizona	Jason Estrella	Jason Estrella / 903 W Summit St Payson AZ 85541	None	8/21/20	Attempted				Phillips
8/20/20	Summons	M0444TR2020012123	Payson Magistrate Court	State of Arizona	Jason Estrella	Jason Estrella / 903 W Summit St Payson AZ 85541	None	8/21/20	Attempted				Phillips

Constable Activity Log - Monthly

Constable: Tony McDaniel

Deputy: Terry Phillips
Constable Clerk: Kimberly Rust

County: Gila
Precinct: Payson

Total Cases Served/Attempted: 200

Mileage Total: 2748.7

Date Received	Type of Document	Case No.	Court	Plaintiff	Defendant	Address	Person Served/ Served Via	Date Served	Service	Mileage Start	Mileage End	Daily Mileage	Notes & Served By
8/21/20	Summons	J0404CM2020000161	Payson Regional Justice Court	State of Arizona	Jamie Moreno	Jamie Moreno / 306 E Phoenix St Payson AZ 85541	None	8/21/20	Attempted				Phillips
8/21/20	Injunction Against Harassment	J0404PO2020000139	Payson Regional Justice Court	Protected Information	Steven Chapman	Steven Chapman / 602 S Colcord #5 Payson AZ 85541	Steven Chapman / 602 S Colcord #5 Payson AZ 85541	8/21/20	Served				Phillips
8/20/20	Summons	M0444TR2020012103	Payson Magistrate Court	State of Arizona	Jason Estrella	Jason Estrella / 903 W Summit St Payson AZ 85541	Jason Estrella / 903 W Summit St Payson AZ 85541	8/21/20	Served				Phillips
8/20/20	Summons	M0444TR2020012123	Payson Magistrate Court	State of Arizona	Jason Estrella	Jason Estrella / 903 W Summit St Payson AZ 85541	Jason Estrella / 903 W Summit St Payson AZ 85541	8/21/20	Served				Phillips
8/21/20	Dependency & Neglect Petition	2020JV13	Montezuma County Combined Court	The People of the State of Colorado	Marcus Roof & Anne Mawk	Anne Mawk 101 E Mail Trail Rd Young AZ 85554	Anne Mawk 101 E Mail Trail Rd Young AZ 85554	8/21/20	Served				Phillips
8/21/20	Exclusive Use of real Estate & Authority to Sell Order	DO201900106	Gila County Superior Court	Donna Rodgers	Dan Opel	Dan Opel / 440 S Valley View Rd Gisela AZ 85541	Dan Opel / 440 S Valley View Rd Gisela AZ 85541	8/21/20	Served				Phillips
8/21/20	Summons & Complaint	20-2340CB	4th Judicial District of State of Michigan Court	A.F.T. Incorporated	Specialty Fluid Solutions LLC	David Gutierrez / 114 S Harmony Hill Young AZ 85554	None	8/21/20	Attempted				Phillips
8/22/20	Summons & Complaint	20-2340CB	4th Judicial District of State of Michigan Court	A.F.T. Incorporated	Specialty Fluid Solutions LLC	David Gutierrez / Phone Call Young AZ 85554	None	8/22/20	Attempted				Phillips
8/21/20	Summons	J0404CM2020000166	Payson Regional Justice Court	State of Arizona	Savannah Shill	Savannah Shill / 7108 W Mian St Payson AZ 85541	Savannah Shill / 7108 W Mian St Payson AZ 85541	8/24/20	Served			66.9	McDaniel
8/24/20	Child Support Packet	DO202000189	Gila County Superior Court	State of Arizona	Taylor Griego	Breanna Griego / 200 W Pecan St Payson AZ 85541	Breanna Griego / 200 W Pecan St Payson AZ 85541	8/24/20	Served				McDaniel
8/24/20	Summmons	M0444CM2020012272	Payson Magistrate Court	State of Arizona	Scott McBrayer	Scott McBrayer / 603 S Ponderosa St Payson AZ 85541	None	8/24/20	Attempted				McDaniel
8/24/20	Child Support Packet	DO202000189	Gila County Superior Court	State of Arizona	Taylor Griego	Taylor Griego 614 S Joy Dr Payson AZ 85541	None	8/24/20	Attempted				McDaniel
8/24/20	Child Support Packet	DO202000189	Gila County Superior Court	State of Arizona	Taylor Griego	Taylor Griego 614 S Joy Dr Payson AZ 85541	None	8/24/20	Attempted				McDaniel
8/24/20	Child Support Packet	DO202000189	Gila County Superior Court	State of Arizona	Taylor Griego	Taylor Griego 614 S Joy Dr Payson AZ 85541	Taylor Griego 614 S Joy Dr Payson AZ 85541	8/24/20	Served				McDaniel
8/24/20	Order of Protection	J0404PO2020000140	Payson Regional Justice Court	Protected Information	Brandy Myers	Brandy Myers / 108 W Main St Payson AZ 85541	Brandy Myers / 108 W Main St Payson AZ 85541	8/24/20	Served				McDaniel
8/24/20	Summons & Complaint	2020CV197OV	Payson Regional Justice Court	Midland Credit Management	Leanna Jenkins & J. Doe	Leanna Jenkins & J. Doe / 121 S Tonto St #24 Payson AZ 85541	Leanna Jenkins / 121 S Tonto St #24 Payson AZ 85541	8/24/20	Served				McDaniel
8/24/20	Summons & Complaint	2020CV197OV	Payson Regional Justice Court	Midland Credit Management	Amy Espinoza & J.Doe	Amy Espinoza & J. Doe / 207 S Tonto St Payson AZ 85541	Amy Espinosa / 207 S Tonto St Payson AZ 85541	8/24/20	Served				McDaniel
8/24/20	Summons & Complaint	CC2020108730RC	Desert Ridge Justice Court	Mayo Clinic	Kaprice & Charles Bachtell	Kaprice & Charles Bachtell / 309 N Manzanita Payson AZ 85541	Kaprice Bachtell / 309 N Manzanita Payson AZ 85541	8/24/20	Served				McDaniel
8/24/20	Summons & Complaint	CC2020105240RC	Moon Valley Justice Court	Westlake Services LLC	Lori Lehman & J. Doe	Lori Lehman & J. Doe / 300 W Bonita #A Payson AZ 85541	None	8/24/20	Attempted				McDaniel

Constable Activity Log - Monthly

Constable: Tony McDaniel

Deputy: Terry Phillips
Constable Clerk: Kimberly Rust

County: Gila
Precinct: Payson

Total Cases Served/Attempted: 200

Mileage Total: 2748.7

Date Received	Type of Document	Case No.	Court	Plaintiff	Defendant	Address	Person Served/ Served Via	Date Served	Service	Mileage Start	Mileage End	Daily Mileage	Notes & Served By
8/24/20	Order of Protection	P0400PO202000051	Gila County Superior Court	Protected Information	Daniel Rozboril	Daniel Rozboril / 103 W Pinon Cir Payson AZ 85541	None	8/24/20	Attempted				McDaniel
8/20/20	Summons & Complaint	2020CV201UN	Payson Regional Justice Court	Midland Credit Management	Jordin Sanders & J. Doe	Jordin Sanders & J. Doe / 624 N Ponderosa Cir #B Payson AZ 85541	None	8/24/20	Attempted				McDaniel
8/24/20	Order of Protection	P0400PO202000051	Gila County Superior Court	Protected Information	Daniel Rozboril	Daniel Rozboril / 103 W Pinon Cir Payson AZ 85541	Daniel Rozboril / 103 W Pinon Cir Payson AZ 85541	8/24/20	Served				McDaniel
8/24/20	Order of Protection	FN2020096473	Maricopa County Superior Court	Protected Information	Jeromy Ford	Jeromy Ford / 509 W Frontier Payson AZ 85541	None	8/24/20	Attempted				McDaniel
8/24/20	Summons & Complaint	CC2020105240RC	Moon Valley Justice Court	Westlake Services LLC	Lori Lehman & J. Doe	Lori Lehman & J. Doe / 300 W Bonita #A Payson AZ 85541	Lori Lehman & J. Doe / 300 W Bonita #A Payson AZ 85541	8/25/20	Served				McDaniel
8/24/20	Order of Protection	FN2020096473	Maricopa County Superior Court	Protected Information	Jeromy Ford	Jeromy Ford / 509 W Frontier Payson AZ 85541	None	8/24/20	Attempted				McDaniel
8/25/20	Subpoena	J0404CT2020001292	Payson Regional Justice Court	State of Arizona	Jesus Romero	Trooper Richardson / 201 N Colcord Payson AZ 85541	Emailed Sgt Axlund & Trooper	8/25/20	Served			112.3	McDaniel
8/24/20	Order of Protection	FN2020096473	Maricopa County Superior Court	Protected Information	Jeromy Ford	Jeromy Ford / 509 W Frontier Payson AZ 85541	None	8/25/20	Attempted				McDaniel
8/25/20	Child Custody Packet	DO201900045	Gila County Superior Court	Angelica Klingensmith	Reynaldo Medina Jr	Reynaldo Medina Jr / 190 N Cornerstone Way #54 Star Valley AZ 85541	None	8/25/20	Attempted				McDaniel
8/25/20	Child Custody Packet	DO201900045	Gila County Superior Court	Angelica Klingensmith	Reynaldo Medina Jr	Reynaldo Medina Jr / 190 N Cornerstone Way #23 Star Valley AZ 85541	None	8/25/20	Attempted				McDaniel
8/25/20	Child Custody Packet	DO201900045	Gila County Superior Court	Angelica Klingensmith	Reynaldo Medina Jr	Reynaldo Medina Jr / 190 N Cornerstone Way #23 Star Valley AZ 85541	Reynaldo Medina Jr / 190 N Cornerstone Way #23 Star Valley AZ 85541	8/25/20	Served				McDaniel
8/25/20	Petition to Enforce	17-9139-442	District court 442 Judical Distrcit Denton Countt Texas	Kristin East	John T Belcher	John Belcher / 507 S Fort McDonald Dr Payson AZ 85541	None	8/25/20	Attempted				McDaniel
8/25/20	Subpoena	2019TR5373	Payson Regional Justice Court	State of Arizona	Ruben Crista	Trooper Richardson / 201 N Colcord Payson AZ 85541	Emailed Sgt Axlund & Trooper	8/25/20	Served				McDaniel
8/25/20	Zoning Violation	CP2001-001	Community Development	Gila County Planning & Zoning	Charles Seiverd	Charles Seiverd / 6240 W Lamin a Ln Pine AZ 85544	Charles Seiverd / 6240 W Lamin a Ln Pine AZ 85544	8/25/20	Served				McDaniel
8/20/20	Summons & Complaint	2020CV201UN	Payson Regional Justice Court	Midland Credit Management	Jordin Sanders & J. Doe	Jordin Sanders & J. Doe / 624 N Ponderosa Cir #B Payson AZ 85541	None	8/25/20	Attempted				McDaniel
8/26/20	Summons & Complaint	2020CV203UN	Payson Regional Justice Court	LVNV Funding LLC	Michael Mitchell & J. Doe	Michael Mitchell & J. Doe / 1100 N Easy St Payson AZ 85541	Michael Mitchell / 1100 N Easy St Payson AZ 85541	8/26/20	Served			80.1	McDaniel
8/25/20	Petition to Enforce	17-9139-442	District court 442 Judical Distrcit Denton Countt Texas	Kristin East	John T Belcher	John Belcher / 507 S Fort McDonald Dr Payson AZ 85541	None	8/26/20	Attempted				McDaniel
8/26/20	Summons & Complaint	2020CV204UN	Payson Regional Justice Court	LVNV Funding LLC	Cesar Ochoa & J. Doe	Cesar Ochoa & J. Doe / 760 E HWY 260 #17 Star Valley AZ 85541	Rosalba Hernandez / 3760 E HWY 260 #17 Payson AZ 85541	8/26/20	Served				McDaniel
8/20/20	Summons & Complaint	2020CV201UN	Payson Regional Justice Court	Midland Credit Management	Jordin Sanders & J. Doe	Jordin Sanders & J. Doe / 624 N Ponderosa Cir #B Payson AZ 85541	Jordin Sanders / 624 N Ponderosa Cir #B Payson AZ 85541	8/26/20	Served				McDaniel

Constable Activity Log - Monthly

Constable: Tony McDaniel

Deputy: Terry Phillips
Constable Clerk: Kimberly Rust

County: Gila
Precinct: Payson

Total Cases Served/Attempted: 200

Mileage Total: 2748.7

Date Received	Type of Document	Case No.	Court	Plaintiff	Defendant	Address	Person Served/ Served Via	Date Served	Service	Mileage Start	Mileage End	Daily Mileage	Notes & Served By
8/26/20	Order of Protection	J0404PO20200001 41	Payson Regional Justice Court	Protected Information	Alec Hamelin	Alec Hamelin / 507 W Sherwood Dr Payson AZ 85541	Alec Hamelin / 507 W Sherwood Dr Payson AZ 85541	8/26/20	Served				McDaniel
8/26/20	Divorce Packet	DO202000195	Gila County Superior Court	Ronald Stahlman	Pamela Stahlman	Pamela Stahlman / 4230 N HWY 87 #2 Pine AZ 85544	Pamela Stahlman / 4230 N HWY 87 #2 Pine AZ 85544	8/27/20	Served			209.6	McDaniel
8/27/20	Order of Protection	J0404PO20200001 42	Payson Regional Justice Court	Protected Information	Juaquina Contreras	Juaquina Contreras / 110 W Round Up Rd #110 Payson AZ 85541	Juaquina Contreras / 110 W Round Up Rd #110 Payson AZ 85541	8/27/20	Served				Phillips
8/21/20	Summons	J0404CM20200001 61	Payson Regional Justice Court	State of Arizona	Jamie Moreno	Jamie Moreno / 301 S Colcord Payson AZ 85541	Jamie Moreno / 301 S Colcord Payson AZ 85541	8/27/20	Served				McDaniel
8/27/20	Summons	M0444CM2020012 277	Payson Magistrate Court	State of Arizona	Hazel Brooks	Hazel Brooks / 333 N McLane Rd Payson AZ 85541	None	8/27/20	Attempted				McDaniel
8/27/20	Summons	M0444CM2020012 277	Payson Magistrate Court	State of Arizona	Hazel Brooks	Hazel Brooks / 4007 N Mistletoe Dr Pine AZ 85544	None	8/27/20	Attempted				McDaniel
8/27/20	Summons	M0444CM2020012 277	Payson Magistrate Court	State of Arizona	Hazel Brooks	Hazel Brooks / 1205 N McLane Rd Payson AZ 85541	Hazel Brooks / 1205 N McLane Rd Payson AZ 85541	8/27/20	Served				McDaniel
8/27/20	Subpoena	2019TR5351	Payson Regional Justice Court	State of Arizona	Nicolas Clark	Trooper Lara / 201 N Colcord Payson AZ 85541	Emailed Sgt Manjarress & Trooper	8/27/20	Served				McDaniel
8/27/20	Thirty Day Notice	None	None	Lupe Thompson	Aaron Macreno	Aaron Macreno/ 218 E Phoenix St Payson AZ 85541	None	8/27/20	Attempted				Phillips
8/27/20	Thirty Day Notice	None	None	Lupe Thompson	Aaron Macreno	Aaron Macreno/ 218 E Phoenix St Payson AZ 85541	Vicki Macreno / 218 E Phoenix St Payson AZ 85541	8/27/20	Served				Phillips
8/27/20	Summons	J0404TR20200001 35	Payson Regional Justice Court	State of Arizona	Christopher Heflin	Christopher Heflin / 603 St Phillips St Payson AZ 85541	Christopher Heflin / 603 St Phillips St Payson AZ 85541	8/27/20	Served				McDaniel
8/27/20	Notice to Appear; Petition	JV2020099	Gila County Superior Court	State of Arizona	Protected Information	Richard Thompson / Protected Information	Dan Hill / Protected Information	8/28/20	Served			256.8	McDaniel
8/27/20	Notice to Appear; Petition	JV2020-101	Gila County Superior Court	State of Arizona	Protected Information	Amber Dewitt / Protected Information	None	8/28/20	Served				Phillips
8/27/20	Notice to Appear; Petition	JV2020-101	Gila County Superior Court	State of Arizona	Protected Information	Amber Dewitt / Protected Information	Amber Dewitt / Protected Information	8/28/20	Served				Phillips
8/27/20	Notice to Appear; Petition	JV2020-100	Gila County Superior Court	State of Arizona	Protected Information	Protected Information	Protected Information	8/28/20	Served				TAR Officer Van Camp
8/27/20	Notice to Appear; Petition	JV2020-100	Gila County Superior Court	State of Arizona	Protected Information	Belinda Guerra / Protected Information	Belinda Guerra / Protected Information	8/28/20	Served				TAR Officer Van Camp
8/27/20	Notice to Appear; Petition	JV2020-099	Gila County Superior Court	State of Arizona	Protected Information	Protected Information	Protected Information	8/28/20	Served				McDaniel
8/28/20	Subpoena	J0404CT20200012 34	Payson Regional Justice Court	State of Arizona	Matthew Slavsky	Trooper Montgomery / 201 N Colcord Payson AZ 85541	Trooper Montgomery / Protected Information	8/28/20	Served				Phillips
8/28/20	Subpoena	M0444CT2020012 519	Payson Magistrate Court	State of Arizona	Luis Gutierrez	Officer Brennan / 303 N Beeline HWY Payson AZ 85541	PPD Front Desk Reception / 303 N Beeline HWY Payson AZ 85541	8/28/20	Served				Phillips

Constable Activity Log - Monthly

Constable: Tony McDaniel

Deputy: Terry Phillips
Constable Clerk: Kimberly Rust

County: Gila
Precinct: Payson

Total Cases Served/Attempted: 200

Mileage Total: 2748.7

Date Received	Type of Document	Case No.	Court	Plaintiff	Defendant	Address	Person Served/ Served Via	Date Served	Service	Mileage Start	Mileage End	Daily Mileage	Notes & Served By
8/27/20	Notice to Appear; Petition	JV2020-101	Gila County Superior Court	State of Arizona	Protected Information	Protected Information	None	8/28/20	Attempted				Phillips
8/28/20	Complaint	CV2020-99	Payson Regional Justice Court	Theresia Franklin	Victoria Bird	Victoria Bird / 110 W Roundup Rd Payson AZ 85541	None	8/28/20	Attempted				McDaniel
8/27/20	Summons & Complaint	2020CV205SC	Payson Regional Justice Court	Robin Dancer	Camela Webster & Clinton Webster	Camela & Clinton Webster / 547 E Sycamore Ln Payson AZ 85541	None	8/28/20	Attempted				McDaniel
8/27/20	Summons & Complaint	2020CV205SC	Payson Regional Justice Court	Robin Dancer	Camela Webster & Clinton Webster	Camela & Clinton Webster / 547 E Sycamore Ln Payson AZ 85541	Camela Webster / 108 W Main St Payson AZ 85541	8/31/20	Served			74.0	McDaniel
8/27/20	Subpoena	DO201900252	Gila County Superior Court	Jill Petrie	Dannie Curtis	Joy Richards Bates / Protected Information	Joy Richards Bates / Protected Information	8/31/20	Served				McDaniel
8/31/20	Letter	None	None	Sherman Alston	Dean Mikelson	Dean Mikelson / 3870 E HWY 260 Star Valley AZ 85541	Dean Mikelson / 3870 E HWY 260 Star Valley AZ 85541	8/31/20	Served				McDaniel
8/31/20	Divorce Packet	DO202000206	Gila County Superior Court	Gretchen Goslin	Dean Goslin	Dean Goslin / 8005 W Gibson Ranch Rd Payson AZ 85541	Dean Goslin / 8005 W Gibson Ranch Rd Payson AZ 85541	8/31/20	Served				McDaniel
8/31/20	Order to Show Cause	M0444CM2020012048	Payson Magistrate Court	State of Arizona	Jacob Waechter	Jacob Waechter / 600 W Bridle Path Ln Payson AZ 85541	Jacob Waechter / 600 W Bridle Path Ln Payson AZ 85541	8/31/20	Served				McDaniel
8/31/20	Summons & Complaint	CC202011964RC	Hassayampa Justice Court	Auto Now Financial Services INC	Tyler Lee Romero & J. Doe Romero	Tyler Lee Romero / 901 S Pineview St Payson AZ 85541	Terri Ready / 901 S Pineview St Payson AZ 85541	8/31/20	Served				McDaniel
8/25/20	Petition to Enforce	17-9139-442	District court 442 Judical Distrcit Denton Countt Texas	Kristin East	John T Belcher	John Belcher / 507 S Fort McDonald Dr Payson AZ 85541	None	8/31/20	Attempted				McDaniel

PAYSON REGIONAL CONSTABLE OFFICE
FEES COLLECTED
AUGUST 2020

DATE	RECEIVED FROM	PROCESS NUMBER	AMOUNT	CHECK / MO / CASH / NCOURT	RECEIPT NUMBER	REFUNDS
7/30/2020	Protected Information	2007PR103	$40.00	Ncourt	979508	$0.00
8/3/2020	Glynn Ross	2008PR001	$48.00	Cash	979509	$0.00
8/3/2020	Shelbey Varga	2008PR005	$56.00	Cash	979510	$0.00
8/4/2020	Javelina Sky Development	2008PR020	$61.20	Check	979511	$0.00
8/4/2020	DL Investigations	2008PR021	$40.00	Check	979512	$16.00
8/4/2020	The Ownes Law Firm	2008PR023	$69.20	Check	979513	$8.00
8/6/2020	Hot Shot Delivery	2008PR037	$64.80	Check	979514	$0.00
8/6/2020	Protected Information	2008PR038	$40.00	Cash	979515	$0.00
8/6/2020	Protected Information	2008PR040	$97.44	Ncourt	979516	$0.00
8/7/2020	Jennifer Randall	2008PR042	$77.20	Cash	979517	$21.20
8/10/2020	Casey Stluka	2008PR047	$90.40	Cash	979518	$0.00
8/10/2020	Collins & Collins	2008PR006 2008PR042 2008PR095	$189.20	Check	979519	$0.00
8/12/2020	Harper Law	2008PR056 2008PR057	$64.00	Ncourt	979520	$0.00
8/12/2020	Tresa Mason	2008PR059	$80.80	Check	979521	$0.00
8/12/2020	Harper Law	2008PR055	$40.00	Ncourt	979522	$0.00
8/13/2020	Elaine Koch	2008PR060	$61.20	Check	979523	$0.00
8/14/2020	Tony Vlahopoulos	2008PR065	$40.00	Check	979524	$0.00
8/17/2020	Micheal Manasseri	2008PR067	$40.00	Cash	979525	$0.00
8/17/2020	GPS Servers	2008PR068	$86.00	Check	979526	$0.80
8/17/2020	GPS Servers	2008PR069	$64.00	Check	979527	$0.00
8/17/2020	John Handka	2008PR071	$48.00	Cash	979528	$8.00
8/17/2020	GPS Servers	2008PR070	$64.00	Check	979529	$16.00
8/17/2020	GPS Servers	2008PR072	$190.00	Check	979530	$0.88
8/18/2020	Protected Information	2008PR073	$40.00	Ncourt	979531	$0.00
8/18/2020	Protected Information	2008PR079	$40.00	Ncourt	979532	$0.00
8/18/2020	Tri County Process	2008PR080	$56.00	Check	979533	$0.00
8/18/2020	J&M Securities LLC	2008PR081	$200.00	Check	979534	$160.00
8/18/2020	GPS Servers	2008PR082	$64.00	Check	979535	$0.00
8/18/2020	GPS Servers	2008PR083	$64.00	Check	979536	$0.00
8/18/2020	GPS Servers	2008PR084	$64.00	Check	979537	$0.00
8/19/2020	Protected Information	2008PR085	$40.00	Cash	979538	$0.00
8/20/2020	James McCarthy	2008PR091	$40.00	Cash	979539	$0.00
8/21/2020	Phil Hineman	2008PR094	$56.00	Ncourt	979540	$0.00
8/21/2020	Protected Information	2008PR095	$40.00	Cash	979541	$0.00
8/21/2020	Donna Rodgers	2008PR096	$64.80	Ncourt	979542	$0.00
8/24/2020	Provest	2008PR101	$69.00	Check	979543	$5.00
8/24/2020	Provest	2008PR102	$69.00	Check	979544	$5.00

8/24/2020	Provest	2008PR103	$69.00	Check	979545	$5.00
8/24/2020	VOIDED	2008PR104	$0.00	Returned to Client	979547	$0.00
8/24/2020	Provest	2008PR105	$69.00	Check	979547	$5.00
8/25/2020	Perfect Services	2008PR110	$56.00	Check	979548	$0.00
8/26/2020	VOIDED	2008PR112	$0.00	Returned to Client	979549	$0.00
8/26/2020	GPS Servers	2008PR113	$64.00	Check	979550	$0.00
8/26/2020	GPS Servers	2008PR114	$64.00	Check	979551	$0.00
8/27/2020	Lupe Thompson	2008PR119	$40.00	Cash	979552	$0.00
8/27/2020	Dennis Bassi	2008PR121	$40.00	Check	979553	$0.00
8/27/2020	Robin Dancer	2008PR127	$64.80	Cash	979554	$0.00
8/31/2020	Sherman Alston	2008PR134	$40.00	Cash	979555	$0.00
8/31/2020	Fast Track Legal. Com	2008PR135	$40.00	Check	979556	$0.00
Collected:			$3,105.04			
Refunds:			$250.88			
Balance:			$2,854.16			

GILA COUNTY TREASURER'S RECEIPT
GILA COUNTY, ARIZONA

129483

DATE 8.31.2020

CONTRACT #

GRANT #

DEPOSIT TO FUND General Fund FUND #

REMITTING AGENCY Payson Regional Constable #324

BILLING PERIOD August 2020

Account Code	Direct Deposit / Check #	Revenue Description	Amount	
1005.324.3405.80	Cash	Service Fees	144	80
	7670		40	00
	7989		40	00
	1165		2880	24
			3105	04

Preparer Signature: Kimberly Rust Title Constable Clerk

Approved Signature: 618 Title Constable

SUMMARY OF DEPOSIT

Currency	144 —
Coins	80
Checks	2960 24
Total	3105 04

7 @ 20 = 140
4 @ 1 = 4
144

TREASURER By Date 9/2/2020

ORIGINATING OFFICE

141245

ARF-6264 **Consent Agenda Item** **5. M.**

Regular BOS Meeting

Meeting Date: 10/06/2020

Reporting Period: August 2020

Submitted For: Anita Escobedo, Clerk of the Superior Court

Submitted By: Esther Canez, Chief Deputy Clerk of the Superior Court

---

Information

Subject

Clerk of the Superior Court's Office Monthly Report for August 2020

Suggested Motion

Acknowledgment of the August 2020 monthly activity report submitted by the Clerk of the Superior Court's Office.

Attachments

Clerks Report - August 2020

IN THE SUPERIOR COURT OF THE STATE OF ARIZONA

IN AND FOR THE COUNTY OF GILA

- - - - -

CLERK'S REPORT

FOR

AUGUST 2020

TO THE HONORABLE BOARD OF SUPERVISORS:

I herewith present the annexed report as and for a true and correct account of all fees earned and collected by me as Clerk of the Superior Court.

ANITA ESCOBEDO
Clerk of the Superior Court
of Gila County, Arizona

STATE OF ARIZONA)
) ss:
County of Gila)

ANITA ESCOBEDO, being first duly sworn according to law, deposes and says:

That she is the Clerk of the Superior Court of the State of Arizona, in and for the County of Gila, and that the annexed and foregoing report contains a true and correct statement of all fees collected by her in the office of said Clerk during the month of August 2020.

ANITA ESCOBEDO
Clerk of the Superior Court
of Gila County, Arizona

SUBSCRIBED AND SWORN to before me this 15th day of September 2020.

ESTHER CANEZ
Chief Deputy

Summary Allocation by Agency Report

GILA COUNTY SUPERIOR COURT

Report generated on : 9/15/2020 12:03:41 PM

Criteria : From Date : 8/1/2020 To Date :8/31/2020

Agency Code	Agency Name	GL Account Num	GL Account Name	Receipt Amount	Dishonored Amount	Adjusted Amount	Bond Forfeiture Amount	Net Amount	5% Set Aside
Agency Name :									
		5555	HOLD ACCOUNT	$2282.00		($2178.49)		$103.51	$0.00
		ZOVER	OVERPAYMENT FUND	$441.00				$441.00	$0.00
		ZYCEF	YUMA COURT ENHANCEMENT FEE	$6.62		($6.62)		$0.00	$0.00
			SubTotal:	**$2729.62**		**($2185.11)**		**$544.51**	**$0.00**
Agency Name : BOND POSTED - THIS COURT									
ZBND	BOND POSTED - THIS COURT	ZBND	BOND POSTED - THIS COURT	$67888.00			($1000.00)	$66888.00	$0.00
			SubTotal:	**$67888.00**			**($1000.00)**	**$66888.00**	**$0.00**
Agency Name : D.A.R.E. PROGRAM									
ZDARE	D.A.R.E. PROGRAM	ZDARE	D.A.R.E. PROGRAM	$37.65				$37.65	$0.00
			SubTotal:	**$37.65**				**$37.65**	**$0.00**
Agency Name : ELECTED OFFICIALS RETIRE. FUND									
ZEORF	ELECTED OFFICIALS RETIRE. FUND	ZEORF	ELECTED OFFICIALS RETIRE. FUND	$2834.02		$42.47		$2876.49	$143.82
		ZEORP	ELECTED OFFICIALS RETIREMENT PLAN (EMPLOYERS CONTRIBUTIONS)	$1142.36		$18.09		$1160.45	$58.02
			SubTotal:	**$3976.38**		**$60.56**		**$4036.94**	**$201.84**
Agency Name : GILA COUNTY TREASURER									
ZCNTY	GILA COUNTY TREASURER	ZOS2	2011 ADDTNL ASSMNT-CNTY TRSR	$7.20				$7.20	$0.36
		ZOS1	2011 ADDTNL ASSMNT-STATE TRSR	$57.60				$57.60	$2.88
		ZVAPB	30% INTERSTATE COMPACT	$25.45				$25.45	$1.27

THIS REPORT IS FOR INTERNAL USE ONLY. DO NOT DISTRIBUTE OR SHARE !

Summary Allocation by Agency Report

GILA COUNTY SUPERIOR COURT

Agency Code	Agency Name	GL Account Num	GL Account Name	Receipt Amount	Dishonored Amount	Adjusted Amount	Bond Forfeiture Amount	Net Amount	5% Set Aside
ZCNTY	GILA COUNTY TREASURER	ZIAAF	ADMINISTRATIVE INDIGENT ASSESSMENT	$288.50				$288.50	$0.00
		ZADPS	ADPS FORENSICS FUND (12-116.01K)	$3.36				$3.36	$0.17
		ZADR	ALTER. DISPUTE RESOLUTION FUND	$65.92		$1.00		$66.92	$3.35
		ZATT	ATTORNEY FEE REIMBURSEMENT	$715.00		$100.00		$815.00	$0.00
		ZALTF	AZ LENGTHY TRIAL FUND	$540.73				$540.73	$27.04
		ZFEE	BASE FEES (GENERAL FUND)	$5945.38		$89.12		$6034.50	$301.73
		ZFINE	BASE FINES	$6574.72				$6574.72	$328.74
		ZFORF	BOND FORFEITURES				$1000.00	$1000.00	$50.00
		ZCIEF	CHILDREN ISSUES EDUC FUND	$101.00		$31.51		$132.51	$6.63
		ZCEF	CLEAN ELECTIONS FUND	$484.50				$484.50	$0.00
		ZCAA1	CONFIDENTAL ADDRESS ASSESSMENT FUND-STATE	$27.47				$27.47	$1.37
		ZCAA2	CONFIDENTIAL ADDRESS ASSESSMENT FUND-LOCAL	$1.45				$1.45	$0.07
		ZCIF	CONFIDENTIAL INTERMEDIARY FUND	$48.10		$0.72		$48.82	$2.44
		ZJDET	COUNTY JUV DETENTION	$1019.52				$1019.52	$50.98
		ZCLLF	COUNTY LAW LIBRARY FUND	$2833.96		$42.47		$2876.43	$143.82
		ZCJEF	CRIMINAL JUSTICE ENHANCE FUND	$2300.43				$2300.43	$115.02
		ZDNAS	DNA STATE SURCHARGE	$252.77				$252.77	$12.64

THIS REPORT IS FOR INTERNAL USE ONLY. DO NOT DISTRIBUTE OR SHARE !

Summary Allocation by Agency Report

GILA COUNTY SUPERIOR COURT

Agency Code	Agency Name	GL Account Num	GL Account Name	Receipt Amount	Dishonored Amount	Adjusted Amount	Bond Forfeiture Amount	Net Amount	5% Set Aside
ZCNTY	GILA COUNTY TREASURER	ZDS	DOCUMENT STOR. & RETRIEVAL FND	$1479.49		$15.00		$1494.49	$74.72
		ZDVCA	DOM. VIOL.-CHLD ABUSE PREV FND	$357.84		$5.37		$363.21	$18.16
		ZDREF	DOMESTIC RELATIONS EDUCATION	$120.00				$120.00	$6.00
		ZDVSF2	DOMESTIC VIOLENCE SERVICE FUND	$1580.75		$24.66		$1605.41	$80.27
		ZDVSF	DOMESTIC VIOLENCE SHELTER FUND	$64.14				$64.14	$3.21
		ZDECJ	DRUG & GANG ENFORCEMENT FINES	$50.69				$50.69	$2.53
		ZDGEF	DRUG & GANG ENFORCEMENT FUND	$9.49				$9.49	$0.47
		ZDUIA	DUI ABATEMENT FUND	$215.00				$215.00	$10.75
		ZFAR4	ENHANCED FARE DELINQUENCY	$480.74				$480.74	$0.00
		ZFAR3	ENHANCED FARE SPECIAL COLLECTIONS	$101.28				$101.28	$0.00
		ZCSVF	EXPEDITED CHILD SUPPORT AND	$444.00				$444.00	$22.20
		ZWITN	EXPERT WITNESS FUND	$1020.00		$60.00		$1080.00	$0.00
		ZEXAP	EXTRA ADULT PROBATION ASMNT	$667.12				$667.12	$33.36
		ZEXJU	EXTRA JUV PROBATION ASMNT	$110.19				$110.19	$5.51
		ZFAR2	FARE DELINQUENCY FEE	$459.13				$459.13	$0.00
		ZFAR1	FARE SPEC COLLECTIONS	$747.58				$747.58	$0.00
		ZFTGS	FILL-THE-GAP SURCHARGE (7%)	$337.25				$337.25	$16.86
		ZCC	GEN JURIS CONCILIATION COURT	$342.69				$342.69	$17.13

THIS REPORT IS FOR INTERNAL USE ONLY. DO NOT DISTRIBUTE OR SHARE !

Summary Allocation by Agency Report

GILA COUNTY SUPERIOR COURT

Agency Code	Agency Name	GL Account Num	GL Account Name	Receipt Amount	Dishonored Amount	Adjusted Amount	Bond Forfeiture Amount	Net Amount	5% Set Aside
ZCNTY	GILA COUNTY TREASURER	ZGCAT	GILA COUNTY ATTORNEY - 60%	$7636.21				$7636.21	$0.00
		ZGCLK	GILA COUNTY CLERK OF THE COURT - 10%	$1272.68				$1272.68	$0.00
		ZGCSC	GILA COUNTY SUPERIOR COURT - 30%	$3818.17				$3818.17	$0.00
		ZJCLF	JUDIC. COLLECT. ENHANCE. FUND - LOCAL	$1391.97		$20.86		$1412.83	$70.64
		ZJCSF	JUDIC. COLLECT. ENHANCE. FUND - STATE	$3524.11		$53.12		$3577.23	$178.86
		ZJCL	JUDICIAL COLLECT ENHANCE FUND - LOCAL	$173.12				$173.12	$0.00
		ZJCS	JUDICIAL COLLECT ENHANCE FUND - STATE	$324.95				$324.95	$0.00
		ZJDU	JUVENILE DIVERSN FUND UNDER $40	$335.00		$50.00		$385.00	$19.25
		ZJFC	JUVENILE FAMILY COUNSELING FEE			$15.51		$15.51	$0.78
		ZJS	JUVENILE PROBATION SERV FEES	$992.04				$992.04	$49.60
		ZMSEF	MEDICAL SERVICES ENHANCE FUND	$636.05				$636.05	$31.80
		ZEMAN	MINOR EMANCIPATION	$46.00				$46.00	$2.30
		ZOS3	OFFCR SAFETY EQUIP-CITY POLICE	$8.00				$8.00	$0.40
		ZOS5	OFFCR SAFETY EQUIP-DPS	$8.00				$8.00	$0.40
		ZOS4	OFFCR SAFETY EQUIP-SHERIFF	$12.79				$12.79	$0.64
		ZPCOF	PRISON CONSTRUCTION AND	$3050.00				$3050.00	$152.50
		ZPBA	PROBATION FEE ADULT	$16537.75		$65.00		$16602.75	$830.14

THIS REPORT IS FOR INTERNAL USE ONLY. DO NOT DISTRIBUTE OR SHARE !

Summary Allocation by Agency Report

GILA COUNTY SUPERIOR COURT

Agency Code	Agency Name	GL Account Num	GL Account Name	Receipt Amount	Dishonored Amount	Adjusted Amount	Bond Forfeiture Amount	Net Amount	5% Set Aside
ZCNTY	GILA COUNTY TREASURER	ZPRSU	PROBATION SURCHARGE ($5.00)	$5.00				$5.00	$0.25
		ZPUBZ	PUBLIC DEFENDER FEES	$457.05				$457.05	$0.00
		ZPSEF	PUBLIC SAFETY EQUIPMENT FUND	$700.00				$700.00	$0.00
		ZSERV	PUBLICATIONS/SERVICE/OTH REIM	$15.51		($15.51)		$0.00	$0.00
		ZRCF	RESOURCE CENTER FUND	$230.90		$3.62		$234.52	$11.73
		ZSOMF	SEX OFFENDER MONITORING FND	$62.00				$62.00	$3.10
		ZSMEN	SPOUSAL MAINTENANCE FUND	$157.57				$157.57	$7.88
		ZSCCM	SUPERIOR CT CASE MANAGEMENT	$24.89		($24.89)		$0.00	$0.00
		ZTECH	TECHNICAL REGISTRATION FUND	$0.90				$0.90	$0.05
		ZVCAF	VICTIM COMPENSATION AND ASSISTANCE FUND	$0.54				$0.54	$0.03
		ZVAF	VICTIMS ASSISTANCE FUND	$59.37				$59.37	$2.97
		ZVREA	VICTIMS RIGHTS ENFORCEMENT FUND	$5.38				$5.38	$0.27
		ZVRF	VICTIM'S RIGHTS FUND	$0.90				$0.90	$0.05
		ZVRIF	VICTIMS RIGHTS IMPLEMENTATION	$149.80				$149.80	$7.49
		ZPRS9	ZPRS9	$144.40				$144.40	$7.22
			SubTotal:	**$71661.49**		**$537.56**	**$1000.00**	**$73199.05**	**$2718.03**
Agency Name : RESTITUTION									
ZREST	RESTITUTION	ZREST	RESTITUTION	$16998.96		$1586.99		$18585.95	$0.00
			SubTotal:	**$16998.96**		**$1586.99**		**$18585.95**	**$0.00**
			Grand Total:	**$163292.10**		**$0.00**	**$0.00**	**$163292.10**	**$2919.87**

SEE DEDUCTIONS ON NEXT PAGE

THIS REPORT IS FOR INTERNAL USE ONLY. DO NOT DISTRIBUTE OR SHARE !

Less Shaded Areas:

	$163292.10
Bonds:	-$ 66888.00
Restitution:	-$ 18585.95
D.A.R.E.:	-$ 37.65
Overpayment Fund:	-$ 441.00
Juvenile Family Counseling Fee:	-$ 15.51
Hold:	-$ 103.51
	$ 77220.48
Elected Official Retirement Fund:	-$ 4036.94
	$ 73183.54

ARF-6285 **Consent Agenda Item** **5. N.**

Regular BOS Meeting

Meeting Date: 10/06/2020

Reporting Period: Monthly Report for August 2020

Submitted For: Mary Navarro, Justice Court Operations Mgr.

Submitted By: Mary Navarro, Justice Court Operations Mgr.

Information

Subject

Globe Regional Justice of the Peace's Office Monthly Report for August 2020

Suggested Motion

Acknowledgment of the August 2020 monthly activity report submitted by the Globe Regional Justice of the Peace's Office.

Attachments

Monthly Report for August 2020

August, 2020	AZTEC CODE	CURRENT ACCOUNT CODE	OLD ACCOUNT CODE	TOTAL AMOUNT ALLOCATED	5% FILL THE GAP SET ASIDE	ADJUSTED BALANCE
Bulk Merchandise Civil Penalty	ZBULK		STATE	$ -	$ -	$ -
Automobile Theft Authority Fund	ZATA		STATE	$ -	$ -	$ -
Child Passenger Restraint	ZCPRF		STATE	$ 290.54	$ 14.53	$ 276.01
Drug and Gang Enforcement Fines	ZDECJ		STATE	$ 1,303.25	$ 65.16	$ 1,238.09
Dangerous Plants, Pests, & Dieseases Trust Fund	ZDPP		STATE	$ -	$ -	$ -
Domestic Violence Shelter Fund	ZDVSF		STATE	$ 171.15	$ 8.56	$ 162.59
FARE Special Collection Fee 19%	ZFAR1		STATE	$ 2,597.62	$ -	$ 2,597.62
FARE Delinquency Fee $35.00	ZFAR2		STATE	$ 1,928.14	$ -	$ 1,928.14
FARE Enhanced Special Collections Fee	ZFAR3		STATE	$ 635.32	$ -	$ 635.32
FARE Enhancement Fee $49.00	ZFAR4		STATE	$ 1,298.51	$ -	$ 1,298.51
Game and Fish - Wildlife	ZGF		STATE	$ -	$ -	$ -
Extra DUI Assessment $500	ZGFDU		STATE	$ 403.96	$ 20.20	$ 383.76
HURF 1 28-5438, 2533C	ZHRF1		STATE	$ -	$ -	$ -
HURF 3 28-5433C, 4139	ZHRF3		STATE	$ -	$ -	$ -
HURF - to DPS	ZHRFD		STATE	$ -	$ -	$ -
Registrar of Contractors	ZRCA		STATE	$ -	$ -	$ -
Display Suspended Plates (DPS)	ZSLPD		STATE	$ -	$ -	$ -
State Photo Enforcement Base Fine	ZSPBF		STATE	$ -	$ -	$ -
State Photo Enforcement Clean Election Surcharge	ZSPCE		STATE	$ -	$ -	$ -
Public Safety Equipment Fund	ZPSEF		STATE	$ 2,306.32	$ 115.32	$ 2,191.00
State Treasurer General Fund	ZSTAT		STATE	$ -	$ -	$ -
AZ DPS Forensics Fund	ZADPS	0872-2061		$ 483.90	$ 24.20	$ 459.70
Alternative Dispute Resolution	ZADR	848-2061	T848-2061	$ 51.79	$ 2.59	$ 49.20
Arson Detection Reward Fund 41-2167D	ZADRF	901-2061	T901-2061	$ -	$ -	$ -
Confidential Address Assessment - State Treasurer	ZCAA1	884-2061		$ 162.60	$ 8.13	$ 154.47
Confidential Address Assessment - Local	ZCAA2	1005-311-3800-30		$ 8.55	$ 0.43	$ 8.12
$5 Constable Training Fund	ZCECF	0915-2061		$ -	$ -	$ -
Citizens Clean Elections	ZCEF	888-2061	T888-2061	$ 1,474.05	$ -	$ 1,474.05
Criminal Justice Enhancement 67%	ZCJEF	812-2061	T812-2061	$ 6,588.22	$ 329.42	$ 6,258.80
Defensive Driving Diversion Fee	ZDDS	1005.311-3510.10	X105-4831	$ 3,100.00	$ 155.00	$ 2,945.00
DNA State Surcharge 3% 12-116.01C	ZDNAS	872-2061	T872-2061	$ 364.73	$ 18.24	$ 346.49
DUI Abatement	ZDUIA	889-2061	T889-2061	$ -	$ -	$ -
Elected Officials Retirement Fund 14.09%	ZEORF	801-2061	T801-2061	$ 386.39	$ 19.32	$ 367.07
Elected Officials Retirement Plan 6.00%	ZEORP	0874-2061	0874-2061	$ 164.38	$ 8.22	$ 156.16
Extra Adult Probation Assessment	ZEXAP	4042.335-3405.30	X25001335-4835	$ 8.89	$ 0.45	$ 8.44
Base Fees (General Fund)	ZFEE	1005.311-3400.15	X105-4615	$ 1,521.84	$ 76.10	$ 1,445.74
Base Fines (General Fund)	ZFINE	1005.311-3510.10	X105-4831	$ 13,795.55	$ 689.78	$ 13,105.77
Fill the Gap Surcharge 7%	ZFTGS		T870-2061	$ 1,029.19	$ 51.46	$ 977.73
Failure To Pay Warrant Surcharge 10%	ZFTPS	1005.311.3400.17	X10501311-4861	$ 2,154.90	$ 107.75	$ 2,047.15
HURF - to Sheriff's Office 28-5533G	ZHRFS	1005.300-3400.15	X1050234-4615	$ -	$ -	$ -
Judicial Collection Enhancement $7	ZJCL	4740.311-3400.15	X357-4615	$ 699.31	$ -	$ 699.31
Judicial Collection Enhancement Local %	ZJCLF	1005.311-3400.15	X105-4615	$ 172.06	$ -	$ 172.06
Judicial Collection Enhancement $13	ZJCS	840-2061	T840-2061	$ 1,298.75	$ -	$ 1,298.75
Judicial Collection Enhancement %PC	ZJCSF	840-2061	T840-2061	$ 445.04	$ 22.26	$ 422.78
Jail (Incarceration) Fees	ZJF	1005.300-3405.40	X10502442-4651	$ 1,344.47	$ -	$ 1,344.47
Local Costs	ZLCL1-5	1005.311-3400.10	X105-4450	$ 100.00	$ 5.00	$ 95.00
Cost of Prosecution Reimbursement 60%	ZLCL6	3544.301-3400.11	X182-4620	$ 1,286.97	$ -	$ 1,286.97
Cost of Prosecution Reimbursement 40%	ZLCL6	4574.333-3400.16	X22601333-4864	$ 857.97	$ -	$ 857.97
County Attorney Bad Check Program	ZLCL7	3545.301-3400.11	X183-4620	$ 25.00	$ 1.25	$ 23.75
Law Enforcement Boating Safety Fund	ZLEAB	958-2061		$ -	$ -	$ -
Miscellaneous Fees - Local	ZMISC	1005.311-3400.15	X105-4615	$ -	$ -	$ -
Medical Services Enhancement 13%	ZMSEF	813-2061	T813-2061	$ 1,926.39	$ 96.32	$ 1,830.07
2011 Additional Assessment - State Treasurer	ZOS1	930-2061	T930-2061	$ 1,313.07	$ 65.66	$ 1,247.41
2011 Additional Assessment - County Treasurer	ZOS2	931-2061	T931-2061	$ 164.16	$ 8.21	$ 155.95
Officer Safety Equipment - City Police - Globe (CP)	ZOS3	932-2061	T932-2061	$ 39.19	$ 1.96	$ 37.23
Officer Safety Equipment - Sheriff (SHF)	ZOS4	933-2061	T933-2061	$ 69.12	$ 3.46	$ 65.66
Officer Safety Equipment - DPS (DPS)	ZOS5	934-2061	T934-2061	$ 514.29	$ 25.72	$ 488.57
Officer Safety Equipment - MVD/ADOT (MVD)	ZOS6	935-2061	T935-2061	$ -	$ -	$ -
Officer Safety Equipment - Game and Fish (GF)	ZOS7	936-2061	T936-2061	$ -	$ -	$ -
Officer Safety - Registrar of Contractors (ROFC)	ZOS8	937-2061	T937-2061	$ -	$ -	$ -
Officer Safety Equipment-Animal Control	ZOS10		T942-2061	$ -	$ -	$ -
Officer Safety Equipment - Globe Fire (FD)	ZOS13	938-2061	T938-2061	$ -	$ -	$ -
Officer Safety Equipment - County Attorney	ZOS14	953-2061	0953-2061	$ 8.99	$ 0.45	$ 8.54
Arizona Department of Insurance (ADOI)	ZOS15	939-2061	T939-2061	$ -	$ -	$ -
Officer Safety Equipment - Miami Police Dept. (MPD)	ZOS16	940-2061	T940-2061	$ 20.00	$ 1.00	$ 19.00
Health and Human Services (HHS)	ZOS17	941-2061	T941-2061	$ -	$ -	$ -
Gila County Animal Control (R)	ZOS18	942-2061	T942-2061	$ -	$ -	$ -
Officer Safety - San Carlos Tribal Police (SCPD)	ZOS19	943-2061	T943-2061	$ 4.00	$ 0.20	$ 3.80
TriCity Fire Department (TRIFI)	ZOS20	944-2061	T944-2061	$ -	$ -	$ -
San Carlos Game and Fish (SCGF)	ZOS23	945-2061	T945-2061	$ -	$ -	$ -
Officer Safety Equip. - Hayden Police Dept. (HPD)	ZOS24	946-2061	T946-2061	$ 0.41	$ 0.03	$ 0.38
Arizona Department of Liquor (ADL)	ZOS25	947-2061	T947-2061	$ -	$ -	$ -
Officer Safety Equipment - Attorney General Office	ZOS26	959-2061		$ -	$ -	$ -
Overpayment Forfeited	ZOVF	1005.311.3510.10	X105-4831	$ 102.41	$ 5.13	$ 97.28
Over Payment Refund	ZOVR			$ -	$ -	$ -
Adult Probation Fee	ZPBA	4042.335-3405.30	X25001335-4835	$ 807.02	$ 40.36	$ 766.66
Prison Construction Fund	ZPCOF	908-2061	T908-2061	$ 2,622.35	$ 131.12	$ 2,491.23
Peace Officer Train. Equip. Fund $4	ZPOTE	0963-2061		$ 486.30	$ 24.32	$ 461.98
Probation Surcharge 2006 ($10.00)	ZPRS6	871-2061	T871-2061	$ -	$ -	$ -
Probation Surcharge 2009 ($20.00)	ZPRS9	871-2061	T871-2061	$ -	$ -	$ -

Probation Surcharge $5.00	ZPRSU	871-2061	T871-2061	$ 3,494.02	$ 174.71	$ 3,319.31
Public Defender Fees	ZPUBZ	1005.345-3300.00	X105-4429	$ 1,988.16	$ -	$ 1,988.16
Reimbursement to County Attorney 60%	ZREIM	3544.301.3400.11	X182-4620	$ -	$ -	$ -
Reimbursement to County Attorney 40%	ZREIM	4574.333.3400.16	X22601333-4864	$ -	$ -	$ -
Security Enhancement Fee	ZSECE			$ -	$ -	$ -
State Highway Fund	ZSHWY			$ -	$ -	$ -
State Highway Work Zone Fund	ZSHWZ		T855-2061	$ -	$ -	$ -
Display Suspended Plates (Sheriff's Office)	ZSLPS	1005.300-3510.10	X105-4264	$ 35.37	$ 1.77	$ 33.60
Technical Registration Fund ($15 Drug offenses)	ZTECH	0833-2061		$ -	$ -	$ -
Victims Assistance Fund	ZVAF	814-2061	T814-2061	$ -	$ -	$ -
Victims Compensation Assist. Fund $9	ZVCAF	0954-2061		$ 438.34	$ 21.92	$ 416.42
Victim Rights Enforcement Fund	ZVREA	0957-2061	T957-2061	$ 319.26	$ 15.97	$ 303.29
Victim Rights Essessment Fund $9	ZVRF	0847-2061		$ 728.47	$ 36.43	$ 692.04
Local Warrant Fee	ZWAR			$ -	$ -	$ -
DARE - Sheriff's Office	ZDASO		SHERIFF D.A.R.E	$ 8.41	$ 0.43	$ 7.98
HURF - to City Police	ZHRFC		CITY POLICE	$ -	$ -	$ -
Display Suspended Plates (Miami Police Dept.)	ZSLMP		CITY POLICE	$ -	$ -	$ -
Display Suspended Plates (Globe City Police)	ZSLPC		CITY POLICE	$ -	$ -	$ -
TOTALS				**$ 63,549.09**	**$ 2,398.54**	**$ 61,150.55**

TOTAL ADJUSTED BALANCE VERIFICATION	$ 61,150.55
TOTAL RESTITUTION RECEIVED	**$ -**
TOTAL RECEIPTS THIS MONTH	**$ 63,549.09**

DATE	CHECK NO.	AMOUNT	MONTHLY REMITTANCE TO:
09/10/20	1082	$ 10,711.04	ARIZONA STATE TREASURER
		$ 52,830.07	GILA COUNTY TREASURER
09/10/20	1083	$ 7.98	GILA COUNTY SHERIFF D.A.R.E.
		$ -	GPD SUSPENDED PLATES
		$ -	MPD SUSPENDED PLATES
		$ 63,549.09	**TOTAL DISTRIBUTIONS THIS MONTH**

$ - Over Payment Refunded

I, Jordan Reardon, Justice of the Peace for the Globe Regional Justice Court, do hereby certify that the foregoing is a true and correct account of funds, to the best of my knowledge and belief, collected by me for the month of AUGUST 2020.

Justice of the Peace

GLOBE REGIONAL JUSTICE COURT
MONTHLY TRUST REPORT

For the Month of: August, 2020

BONDS

BALANCE AT THE BEGINNING OF THE MONTH	**$ 7,204.00**
RECEIVED DURING THE MONTH	**$ 15,441.00**
DISBURSED DURING THE MONTH	**$ 2,312.00**
BALANCE AT THE END OF THE MONTH	**$ 20,333.00**

Financial Clerk

Justice of the Peace/Court Manager

*Auditor General: Monthly trust report-summarize the courts bond and deposit transactions - although bond and deposit monies remain in the court bonds account, it must be included in financial reports – the report must be filed with the county disbursement and it must indicate beginning balances, deposits, withdrawals and balances due.

ARF-6276 **Consent Agenda Item** **5. O.**

Regular BOS Meeting

Meeting Date: 10/06/2020

Reporting Period: August 2020

Submitted For: Dorothy Little, Justice of the Peace-Payson Region

Submitted By: Dorothy Little, Justice of the Peace-Payson Region

---

Information

Subject

Payson Regional Justice of Peace's Office Monthly Report for August 2020

Suggested Motion

Acknowledgement of the August 2020 monthly activity report submitted by the Payson Regional Justice of the Peace's Office.

Attachments

August 2020

PAYSON JUSTICE COURT TREASURER'S RECAP

August, 2020	AZTEC	ACCOUNT	ACCOUNT	TOTAL AMOUNT	5% FILL THE GAP	ADJUSTED
FUND NAME	CODE	CODE	CODE	ALLOCATED	SET ASIDE	BALANCE
AZ DPS Forensics Fund	ZADPS	0872-000-000-2061-00	0872-2061	$ 391.54	$ 19.58	$ 371.96
Alternative Dispute Resolution	ZADR	0848000-000-000-2061-00	T848-2061	$ 50.20	$ 2.51	$ 47.69
Public Defender Fee	ZPUBZ	1005000-314-000-3400-11	X10501314004383	$ 11.00		$ 11.00
Confidential Address Assessment - State Treasurer	ZCAA1	0884000-000-000-2061-00		$ -	$ -	$ -
Confidential Address Assessment - Local	ZCAA2	1005000-302-000-3800.30		$ -	$ -	$ -
Constable Ethics Committee Fund	ZCECF	0916000-2061-00	0916-2061	$ 35.00	$ 1.75	$ 33.25
Citizens Clean Elections	ZCEF	0888000-000-000-2061-00	T888-2061	$ 915.25		$ 915.25
Criminal Justice Enhancement 67%	ZCJEF	0812000-000-000-2061-00	T812-2061	$ 3,986.32	$ 199.32	$ 3,787.00
Defensive Driving Diversion Fee	ZDDS	1005000-314-000-3400-90	X105-4609	$ 4,800.00	$ 240.00	$ 4,560.00
DNA State Surcharge 3% 12-116.01C	ZDNAS	0872000-000-000-2061-00	T872-2061	$ 169.13	$ 8.46	$ 160.67
Elected Officials Retirement Fund 15.30%	ZEORF	0801000-000-000-2061-00	T801-2061	$ 374.36	$ 18.72	$ 355.64
Elected Officials Retirement Plan 6%	ZEORP			$ 159.33	$ 7.97	$ 151.36
Base Fees (General Fund)	ZFEE	1005000-314-000-3400-15	X105-4615	$ 1,473.98	$ 73.70	$ 1,400.28
Base Fines (General Fund)	ZFINE	1005000-314-000-3510-10	X105-4831	$ 9,454.48	$ 472.72	$ 8,981.76
Fill the Gap Surcharge 7%	ZFTGS	0870000-000-000-2061-00	T870-2061	$ 640.18	$ 32.01	$ 608.17
Failure To Pay Warrant Surcharge 10%	ZFTPS	1005000-314-000-3400-17	X10501314004861	$ -	$ -	$ -
Extra DUI Assessment $500	ZGFDU	0912000-000-000-2061-00	T912-2061	$ 50.00	$ 2.50	$ 47.50
Judicial Collection Enhancement $7	ZJCL	4741000-314-000-3400-15	X36001314004615	$ 232.63		$ 232.63
Judicial Collection Enhancement Local %	ZJCLF	4741000-314-000-3400-15	X36001314004615	$ 166.66	$ 8.33	$ 158.33
Judicial Collection Enhancement $13	ZJCS	0818000-000-000-2061-00	T818-2061	$ 432.04		$ 432.04
Judicial Collection Enhancement %PC	ZJCSF	0840000-000-000-2061-00	T840-2061	$ 430.97	$ 21.55	$ 409.42
Jail (Incarceration) Fees	ZJF	1005000-300-340-3405-40	X10502340004651	$ 709.00		$ 709.00
Local Costs	ZLCL	1005000-314-000-3510-10	X105-4831	$ -	$ -	$ -
Administrative Costs	ZMISC	1005000-314-000-3400-99	X105-4886	$ -	$ -	$ -
Medical Services Enhancement 13%	ZMSEF	0813000-000-000-2061-00	T813-2061	$ 1,189.06	$ 59.45	$ 1,129.61
2011 Additional Assessment - State Treasurer	ZOS1	0930000-000-000-2061-00		$ 566.65	$ 28.33	$ 538.32
2011 Additional Assessment - County Treasurer	ZOS2	0931000-000-000-2061-00		$ 70.84	$ 3.54	$ 67.30
Officer Safety Equipment - City Police (CP)	ZOS3	0932000-000-000-2061-00		$ 8.62	$ 0.43	$ 8.19
Officer Safety Equipment - Sheriff (SHF)	ZOS4	0933000-000-000-2061-00		$ 52.28	$ 2.61	$ 49.67
Officer Safety Equipment - DPS (DPS)	ZOS5	0934000-000-000-2061-00		$ 213.49	$ 10.67	$ 202.82
Officer Safety Equipment - MVD/ADOT (MVD)	ZOS6	0935000-000-000-2061-00		$ -	$ -	$ -
Officer Safety Equipment - Game and Fish (GF)	ZOS7	0936000-000-000-2061-00		$ 4.00	$ 0.20	$ 3.80
Officer Safety - Registrar of Contractors (ROC)	ZOS8			$ -	$ -	$ -
Officer Safety Equipment - Animal Control (AC)	ZOS10	0942000-000-000-2061-00		$ -	$ -	$ -
Officer Safety - Tonto Apache Police (TAR)	ZOS15	0950000-000-000-2061-00		$ 4.78	$ 0.24	$ 4.54
Officer Safety - Department of Agriculture	ZOS17	0951000-000-000-2061-00		$ -	$ -	$ -
Overpayment Forfeited	ZOVER	1005000-314-000-3510-10	X105-4831	$ 12.42	$ 0.62	$ 11.80
Adult Probation Fee	ZPBA	4042000-335-000-3405-30	X25001335-4835	$ -	$ -	$ -
Peace Officer Training Equipment Fund	ZPOTE	0963-2061		$ 219.29	$ 10.96	$ 208.33
Probation Surcharge 2006 ($10.00)	ZPRS6	0871000-000-000-2061-00	T871-2061	$ -	$ -	$ -
Probation Surcharge 2009 ($20.00)	ZPRS9	0871000-000-000-2061-00	T871-2061	$ -	$ -	$ -
Probation Surcharge $5.00	ZPRSU	0871000-000-000-2061-00	T871-2061	$ 1,522.21	$ 76.11	$ 1,446.10
Public Safety Equipment	ZPSEF	0912000-000-000-2061-00	T912-2061	$ 1,674.00	$ 83.70	$ 1,590.30
Reimbursement to County Attorney 60%	ZREIM	3544000-301-000-3400-11	X18201301004777	$ 462.00		$ 462.00
Reimbursement to Superior Court 40%	ZREIM	4574000-333-000-3400-16	X226333004864	$ 308.00		$ 308.00
Security Enhancement Fee (Local)	ZSECE			$ -	$ -	$ -
Technical Registration Fund ($15 Drug Offenses)	ZTECH	0833000-000-000-2061-00		$ -	$ -	$ -
Victim Comp Assistance Fund	ZVCAF	0954-2061		$ 206.55	$ 10.33	$ 196.22
Victim Rights Enforcement Fund	ZVREA	0957000-2061-00		$ 136.92	$ 6.85	$ 130.07
Victim Rights Fund	ZVRF	847-2061		$ 343.32	$ 17.17	$ 326.15
Forfeited Bond to Treasurer	ZFORF	1005000-314-000-3510-10	X105-4831	$ -	$ -	$ -
AZ Native Plant Fund	ZANP	0833-2061	STATE/COUNTY	$ -	$ -	$ -
ARSON	ZADRF	0883-2061	STATE/COUNTY	$ -	$ -	$ -
Child Passenger Restraint	ZCPRF	0883-2061	STATE/COUNTY	$ 13.78	$ 0.69	$ 13.09
Drug and Gang Enforcement Fines	ZDECJ	0883-2061	STATE/COUNTY	$ 537.59	$ 26.88	$ 510.71
DUI Abatement	ZDUIA	0883-2061	STATE/COUNTY	$ 250.00	$ 12.50	$ 237.50
Domestic Violence Shelter Fund	ZDVSF	0883-2061	STATE/COUNTY	$ -	$ -	$ -
FARE Special Collection Fee 19%	ZFAR1	0883-2061	STATE/COUNTY	$ 567.65		$ 567.65
FARE Delinquency Fee $35.00	ZFAR2	0883-2061	STATE/COUNTY	$ 253.29		$ 253.29
FARE Enhanced Special Collection Fee	ZFAR3	0883-2061	STATE/COUNTY	$ -		$ -
FARE Enhanced Delinquency Fee	ZFAR4	0883-2061	STATE/COUNTY	$ -		$ -
Game and Fish - Wildlife	ZGF		STATE/COUNTY	$ 300.00	$ 15.00	$ 285.00
HURF 1 28-5438, 2533C	ZHRF1		STATE/COUNTY	$ -	$ -	$ -
HURF 3 28-5433C, 4139	ZHRF3		STATE/COUNTY	$ -	$ -	$ -
HURF - to DPS	ZHRFD		STATE/COUNTY	$ -	$ -	$ -
Prison Construction Fund	ZPCOF		STATE/COUNTY	$ 1,744.02	$ 87.20	$ 1,656.82
Registrar of Contractors	ZRCA		STATE/COUNTY	$ -	$ -	$ -
State Highway Fund	ZSHWY		STATE/COUNTY	$ -	$ -	$ -
State Highway Work Zone Fund	ZSHWZ		STATE/COUNTY	$ -	$ -	$ -
Display Suspended Plates (DPS)	ZSLPD		STATE/COUNTY	$ 39.98	$ 2.00	$ 37.98
Sex Offender Mon Fund	ZSOMF		STATE/COUNTY	$ -	$ -	$ -
State Photo Enforcement Base Fine	ZSPBF		STATE/COUNTY	$ -	$ -	$ -
State Photo Enforcement Clean Election Surcharge	ZSPCE		STATE/COUNTY	$ -	$ -	$ -
Bad Check Program - County Attorney	ZBAD		COUNTY ATTY	$ -		$ -
Gila County DARE Program	ZDARE	0855-2061	GILA COUNTY	$ -	$ -	$ -
HURF - to Sheriff's Office 28-5533G	ZHRFS		SHERIFF	$ -	$ -	$ -
Display Suspended Plates (Sheriff's Office)	ZSLPS		SHERIFF	$ -	$ -	$ -
HURF - to City Police	ZHRFC		CITY POLICE	$ -	$ -	$ -
Display Suspended Plates (City Police)	ZSLPC		CITY POLICE	$ -	$ -	$ -
Display Suspended Plates (T.A.R. Police)	ZSLPA		T.A.R. POLICE	$ -	$ -	$ -
TOTALS				$ 35,182.81	$ 1,564.60	$ 33,618.21
			TOTAL ADJUSTED BALANCE VERIFICATION			$ 33,618.21

DATE	CHECK NO.	AMOUNT	MONTHLY REMITTANCE TO:
9/2/20	6595	$ 31,620.77	GILA COUNTY TREASURER
		$ 3,562.04	ARIZONA STATE TREASURER
		$ -	GILA COUNTY BAD CHECK PROGRAM
		$ -	GILA COUNTY: DARE
		$ -	SHERIFF SUSPENDED PLATES AND HURF
		$ -	CITY POLICE SUSPENDED PLATES AND HURF
		$ -	T.A.R.POLICE SUSPENDED PLATES
		$ 35,182.81	TOTAL DISTRIBUTIONS THIS MONTH

All funds to Gila County Treasurer

I, DOROTHY A. LITTLE, Gila County Justice of the Peace, do hereby certify this is a true and correct copy of the funds collected by Payson Justice Court for AUGUST, 2020.

DOROTHY A. LITTLE
Gila County Justice of the Peace

Limited Jurisdict
Civil Caseload Sum
PAYSON REGIONAL JUST

START DATE : 8/1/2020

	Column ID	1	2	3	4	5	6
LINE ID	CASE TYPE	Begin Pending		New Filing	Transfer In	Reopened	Reactivated
		Active	Inactive				
	Section - 1 Civil						
A	Small Claims	25	0	5	0	0	0
B	Forcible Detainer / Eviction Action	5	0	1	0	0	0
C	Tort	0	0	0	0	0	0
D	Contract	2	0	0	0	0	0
E	Debt-Seller Plaintiff	0	0	0	0	0	0
F	Other Civil	122	1	26	0	0	0
G	Total Civil Complaints	**154**	**1**	**32**	**0**	**0**	**0**
	Section - 2 Domestic Violence & Harassment Petitions						
A	Civil Emergency Order of Protection	0	0	0	0	0	0
B	Civil Order of Protection	19	0	5	0	0	0
C	Injunction Against Harassment	29	0	7	0	0	0
D	Injunction Against Workplace Harassment	1	0	1	0	0	0
	Section - 3 Special Case Characteristics						
A	Self Represented Litigants	201	1	45	0	0	0
B	Interpreter Provided	0	0	0	0	0	0

tion Courts
nmary Report
TICE COURT - 404

END DATE : 8/31/2020

7	8	9	10	11	12	13
Terminations		Placed on Inactive Status	Statistical Correction		End Pending	
Entry of Judgment	Reopened		Active	Inactive	Active	Inactive
3	0	0			27	0
3	0	0			3	0
0	0	0			0	0
1	0	0			1	0
0	0	0			0	0
8	0	0			140	1
15	**0**	**0**			**171**	**1**
0	0	0			0	0
5	0	0			19	0
7	0	0			29	0
1	0	0			1	0
27	0	0			219	1
0	0	0			0	0

Limited Jurisdict
Civil Caseload Sum
PAYSON REGIONAL JUST

START DATE : 8/1/2020

	Column ID	1	2	3	4	5	6
LINE ID	CASE TYPE	Begin Pending		New Filing	Transfer In	Reopened	Reactivated
		Active	Inactive				
	Section - 1 Civil						
A	Small Claims	25	0	5	0	0	0
B	Forcible Detainer / Eviction Action	5	0	1	0	0	0
C	Tort	0	0	0	0	0	0
D	Contract	2	0	0	0	0	0
E	Debt-Seller Plaintiff	0	0	0	0	0	0
F	Other Civil	122	1	26	0	0	0
G	Total Civil Complaints	**154**	**1**	**32**	**0**	**0**	**0**
	Section - 2 Domestic Violence & Harassment Petitions						
A	Civil Emergency Order of Protection	0	0	0	0	0	0
B	Civil Order of Protection	19	0	5	0	0	0
C	Injunction Against Harassment	29	0	7	0	0	0
D	Injunction Against Workplace Harassment	1	0	1	0	0	0
	Section - 3 Special Case Characteristics						
A	Self Represented Litigants	201	1	45	0	0	0
B	Interpreter Provided	0	0	0	0	0	0

tion Courts
nmary Report
TICE COURT - 404

END DATE : 8/31/2020

7	8	9	10	11	12	13
Terminations		Placed on Inactive Status	Statistical Correction		End Pending	
Entry of Judgment	Reopened		Active	Inactive	Active	Inactive
3	0	0			27	0
3	0	0			3	0
0	0	0			0	0
1	0	0			1	0
0	0	0			0	0
8	0	0			140	1
15	**0**	**0**			**171**	**1**
0	0	0			0	0
5	0	0			19	0
7	0	0			29	0
1	0	0			1	0
27	0	0			219	1
0	0	0			0	0

ARF-6290 **Consent Agenda Item** **5. P.**

Regular BOS Meeting

Meeting Date: 10/06/2020

Reporting Period: Recorder's Office Monthly Report for August 2020

Submitted For: Sadie Bingham, Recorder

Submitted By: Charlotte Williams, Chief Deputy Recorder

Information

Subject

Recorder's Office Monthly Report for August 2020

Suggested Motion

Acknowledgment of the August 2020 monthly activity report submitted by the Recorder's Office.

Attachments

Recorder's August 2020 Monthly Report

Gila County Recorder

REPORT FOR THE MONTH OF AUGUST 2020

I, SADIE JO BINGHAM, Recorder in and for the County of Gila, State of Arizona hereby state and certify that the fees earned for this month are as set forth in the attached report.

Sadie Jo Bingham, Gila County Recorder

Bank Deposit

From08/01/2020To08/31/2020

Deposit Totals

Payment Type	Actual Total	Adjusted Total
Cash	$1,444.00	
Check	$9,357.60	
Credit Card OTC	$1,788.30	
Electronic Transfer	$32,370.00	
Total Deposit	$44,959.90	

Included Tills

Bank Deposit	Deposited	Till	Expected	Actual Adjusted	Bank Account
7019	Aug 3, 2020	1_ReceiptStation1_Mon / 6794	$321.00	$321.00	Bank Account
7020	Aug 3, 2020	11_Payson_Mon / 6793	$1,704.00	$1,704.00	Bank Account
7021	Aug 4, 2020	12_Payson_Tue / 6796	$1,107.00	$1,107.00	Bank Account
7022	Aug 4, 2020	2_ReceiptStation1_Tue / 6797	$1,623.00	$1,623.00	Bank Account
7023	Aug 5, 2020	13_Payson_Wed / 6800	$1,473.00	$1,473.00	Bank Account
7024	Aug 5, 2020	3_ReceiptStation1_Wed / 6799	$1,351.00	$1,351.00	Bank Account
7025	Aug 6, 2020	14_Payson_Thu / 6802	$2,465.00	$2,465.00	Bank Account
7026	Aug 6, 2020	4_ReceiptStation1_Thu / 6801	$421.00	$421.00	Bank Account
7027	Aug 7, 2020	15_Payson_Fri / 6803	$3,180.00	$3,180.00	Bank Account
7028	Aug 7, 2020	5_ReceiptStation1_Fri / 6804	$896.30	$896.30	Bank Account
7029	Aug 10, 2020	11_Payson_Mon / 6805	$1,892.00	$1,892.00	Bank Account
7030	Aug 10, 2020	1_ReceiptStation1_Mon / 6806	$2,410.00	$2,410.00	Bank Account
7031	Aug 11, 2020	2_ReceiptStation1_Tue / 6807	$1,645.00	$1,645.00	Bank Account
7032	Aug 11, 2020	12_Payson_Tue / 6808	$1,702.00	$1,702.00	Bank Account
7035	Aug 12, 2020	13_Payson_Wed / 6810	$1,311.00	$1,311.00	Bank Account
7036	Aug 12, 2020	3_ReceiptStation1_Wed / 6809	$1,367.00	$1,367.00	Bank Account
7037	Aug 13, 2020	14_Payson_Thu / 6813	$1,174.00	$1,174.00	Bank Account
7038	Aug 13, 2020	4_ReceiptStation1_Thu / 6812	$3,826.00	$3,826.00	Bank Account
7039	Aug 14, 2020	15_Payson_Fri / 6815	$2,010.00	$2,010.00	Bank Account
7040	Aug 14, 2020	5_ReceiptStation1_Fri / 6814	$1,095.00	$1,095.00	Bank Account
7041	Aug 17, 2020	11_Payson_Mon / 6817	$2,082.00	$2,082.00	Bank Account
7042	Aug 17, 2020	1_ReceiptStation1_Mon / 6816	$2,298.00	$2,298.00	Bank Account
7043	Aug 18, 2020	12_Payson_Tue / 6819	$1,725.00	$1,725.00	Bank Account
7044	Aug 18, 2020	2_ReceiptStation1_Tue / 6818	$2,609.00	$2,609.00	Bank Account
7045	Aug 19, 2020	13_Payson_Wed / 6821	$1,435.00	$1,435.00	Bank Account
7046	Aug 19, 2020	3_ReceiptStation1_Wed / 6820	$2,257.00	$2,257.00	Bank Account
7047	Aug 20, 2020	14_Payson_Thu / 6823	$968.00	$968.00	Bank Account
7048	Aug 20, 2020	4_ReceiptStation1_Thu / 6822	$1,611.00	$1,611.00	Bank Account
7049	Aug 21, 2020	5_ReceiptStation1_Fri / 6824	$1,477.00	$1,477.00	Bank Account
7050	Aug 21, 2020	15_Payson_Fri / 6825	$2,106.00	$2,106.00	Bank Account
7051	Aug 24, 2020	1_ReceiptStation1_Mon / 6826	$2,436.00	$2,436.00	Bank Account
7052	Aug 24, 2020	11_Payson_Mon / 6827	$1,875.00	$1,875.00	Bank Account
7053	Aug 25, 2020	2_ReceiptStation1_Tue / 6829	$1,991.00	$1,991.00	Bank Account
7054	Aug 25, 2020	12_Payson_Tue / 6828	$1,564.00	$1,564.00	Bank Account
7055	Aug 26, 2020	3_ReceiptStation1_Wed / 6831	$2,006.00	$2,006.00	Bank Account
7056	Aug 26, 2020	13_Payson_Wed / 6830	$1,594.00	$1,594.00	Bank Account
7057	Aug 27, 2020	4_ReceiptStation1_Thu / 6832	$1,797.00	$1,797.00	Bank Account
7058	Aug 27, 2020	14_Payson_Thu / 6833	$2,100.00	$2,100.00	Bank Account
7059	Aug 28, 2020	5_ReceiptStation1_Fri / 6834	$2,278.00	$2,278.00	Bank Account
7060	Aug 28, 2020	15_Payson_Fri / 6835	$1,800.00	$1,800.00	Bank Account
7061	Aug 31, 2020	11_Payson_Mon / 6836	$2,509.00	$2,509.00	Bank Account
7062	Aug 31, 2020	1_ReceiptStation1_Mon / 6837	$2,735.60	$2,735.60	Bank Account

Bank Deposit

From08/01/2020To08/31/2020

7064	Aug 31, 2020 Web / 6798		$32.00	$32.00	Bank Account
7068	Aug 31, 2020 previousday / 6839		$2,295.00	$2,295.00	Bank Account
7103	Aug 31, 2020 previousday / 6876		$15.00	$15.00	Bank Account
		Total	$78,568.90	$78,568.90	
		Non-Deposit Total	($33,609.00)	($33,609.00)	
		Deposit Total	**$44,959.90**	**$44,959.90**	
		Total Till Over/Short		$0.00	

Journal Activity

Account		Debits	Credits	Net
Asset				
1005SuspensePrePayAccounts	1005 Suspense - Prepay	$1,207.00	($2,470.00)	($1,263.00)
Cash	Cash/Check	$10,801.60	$0.00	$10,801.60
creditcard	credit card	$1,788.30	$0.00	$1,788.30
creditcardweb	Credit Card Web	$32.00	$0.00	$32.00
D-1005-120-01-4612-023	Recording Fee (deferred)	$44.00	($44.00)	$0.00
D-7145-120-01-4775-004	Recorder Storage and Retrieval (deferred)	$16.00	($16.00)	$0.00
ETransfer	Electronic Transfers	$32,370.00	$0.00	$32,370.00
	Total	**$46,258.90**	**($2,530.00)**	**$43,728.90**
Liability				
1005SuspenseChargeAccounts	1005 Suspense - Charge	$60.00	($60.00)	$0.00
	Total	**$60.00**	**($60.00)**	**$0.00**
Expense				
	Total	**$0.00**	**$0.00**	**$0.00**
Revenue				
1005-120-01-4612-001	Copies	$0.00	($996.00)	($996.00)
1005-120-01-4612-002	Certified Seal	$0.00	($51.00)	($51.00)
1005-120-01-4612-018	Misc Fees (Notification)	$0.00	($18.00)	($18.00)
1005-120-01-4612-023	Recording Fee	$0.00	($35,590.00)	($35,590.00)
1005-120-01-4612-023-1	General Fund - Voter	$0.00	($324.15)	($324.15)
7145-120-01-4775-004	Recorder Storage and Retrieval	$0.00	($5,544.00)	($5,544.00)
7146-120-01-4612	Mining Fees	$0.00	($25.00)	($25.00)
7146-120-01-4776-009	State Mining Fees	$0.00	($100.00)	($100.00)
7147-120-01-4612-018	Voter	$0.00	($335.75)	($335.75)
7147-120-01-4774-031	Miscellaneous	$0.00	($745.00)	($745.00)
eRecording	eRecording	$32,310.00	($32,310.00)	$0.00
	Total	**$32,310.00**	**($76,038.90)**	**($43,728.90)**
	Total	**$78,628.90**	**($78,628.90)**	**$0.00**

Range Summary

Range	Account	Debits	Credits	Net
Cash/Check				
	Cash Cash/Check	$10,801.60	$0.00	$10,801.60
	Range Total	**$10,801.60**	**$0.00**	**$10,801.60**

Sadie Bingham
Gila County Recorder

FY 2019

Month	No of Doc.	Recorder Storage & Retrieval 7145	Recording Fees 1005	Computer Svcs 7147	Mining Fee 7146	State mining	Interest	Refunds	MISC	Recorder Check to Treasurer
July	1560	$ 5,712.00	$ 37,653.52	$ 1,120.95	$ -	$ -	$ -	$ -	$ -	$ 44,486.47
Aug	1456	$ 5,544.00	$ 36,979.15	$ 1,080.75	$ 25.00	$ 100.00	$ -	$ -	$ -	$ 43,728.90
Sept										
Oct										
Nov										
Dec										
Jan										
Feb										
Mar										
Apr										
May										
June										
Total	3016	$ 11,256.00	$ 74,632.67	$ 2,201.70	$ 25.00	$ 100.00	$ -	$ -	$ -	$ 88,215.37

Fiscal Year
All Monies $ 88,215.37

Account	DS	EPN	Indecomm	Ingeo	IRS	Simplifile
Amount applied	$ 12,210.00	$ 1,500.00	$ 150.00	$ 2,940.00	$ 45.00	$ 12,495.00
To come in September	$ 900.00	$ 150.00	$ 30.00	$ 90.00	$ 15.00	$ 1,125.00
	$720.00					
Total	$ 13,830.00	$ 1,650.00	$ 180.00	$ 3,030.00	$ 60.00	$ 13,620.00

House Account Summary

Gila County AZ Recorder

For the Period of 08/01/2020 - 08/31/2020

Immediate and Deferred Accounts

House Account ID	House Account Name	Starting Balance	Charges	Payments	Ending Balance
ACCU	ACCUSEARCH	(129.00)	0.00	0.00	(129.00)
ADOT	AZ DEPT OF TRANS	(224.50)	0.00	0.00	(224.50)
APS	APS/COPIES	(80.00)	0.00	0.00	(80.00)
APSR	APS/RECORDINGS	(289.00)	0.00	0.00	(289.00)
ARARS	AZ RESEARCH &AMP RETRIEVAL SVCS	(170.00)	28.00	0.00	(142.00)
AWC	ARIZONA WATER COMPANY	(32.00)	0.00	0.00	(32.00)
AZDORI	ADOR ACCOUNTS PAYABLE	(1,050.80)	0.00	0.00	(1,050.80)
AZDWR	ARIZONA DEPARTMENT OF WATER RESOURCES	(100.00)	0.00	0.00	(100.00)
AZRE/RECORDING	ARIZONA DEPT OF REALESTATE	(2,042.00)	0.00	0.00	(2,042.00)
BK	BILL KING	(761.00)	236.00	0.00	(525.00)
CRSI	Colorado Records Sooner Inc	(30.00)	0.00	0.00	(30.00)
CTS	COMPLETE TITLE SOLUTIONS	(47.00)	0.00	0.00	(47.00)
D2	D2 SURVEYING LLC	(257.00)	72.00	0.00	(185.00)
D3	D3 Title Agency	(100.00)	0.00	0.00	(100.00)
DS	DATA SERVICES	(1,000.00)	13,830.00	(13,830.00)	(1,000.00)
EMP	EMPIRE WEST TITLE AGENCY LLC	(83.00)	0.00	0.00	(83.00)
EPN	eRecording Partners Network	(1,000.00)	1,650.00	(1,650.00)	(1,000.00)
EQUIT	EQUITY SERVICES	(50.00)	0.00	0.00	(50.00)
FARES	CORELOGIC	(421.40)	190.00	(2,470.00)	(2,701.40)
FATM	FIRST AMERICAN MICROFICHE	(37.20)	0.00	0.00	(37.20)
FNDS	BLACK KNIGHT FINANCIAL SERVICES	(2,043.20)	190.00	0.00	(1,853.20)
GCCD	GILA COUNTY COMMUNITY	164.50	0.00	0.00	164.50

House Account Summary

Gila County AZ Recorder

For the Period of 08/01/2020 - 08/31/2020

Immediate and Deferred Accounts

House Account ID	House Account Name	Starting Balance	Charges	Payments	Ending Balance
	DEVELOPMENT				
HANSEN-ENGINEERING	HANSEN ENGINEERING & SURVEYING	(56.00)	0.00	0.00	(56.00)
IMAPP	IMAPP , INC	(53.40)	0.00	0.00	(53.40)
INDECOMM	INDECOMM	(1,000.00)	180.00	(180.00)	(1,000.00)
Ingeo	Ingeo - eRecording	(1,127.00)	3,030.00	(3,030.00)	(1,127.00)
IRS	INTERNAL REVENUE SERVICE	(82.00)	60.00	(60.00)	(82.00)
LA001	First American Title Lenders Advantage	(428.50)	0.00	0.00	(428.50)
LTIC	Lawyers Title of Arizona inc	(156.00)	0.00	0.00	(156.00)
MHK	MORRIS HALL KINGHORN	(266.00)	0.00	0.00	(266.00)
NDTS-TSG	FIRST AMERICAN TITLE INSURANCE COMPANY	(855.00)	0.00	0.00	(855.00)
NewAcct1	Applied Technology Resources Inc	(190.00)	0.00	0.00	(190.00)
NTC	NATIONWIDE TITLE CLEARING	(982.00)	0.00	0.00	(982.00)
PIONE	PIONEER TITLE AGENCY FICHE	(7,471.00)	175.00	0.00	(7,296.00)
PTP2	PIONEER TITLE AGENCY RECORDINGS 2	(6,469.00)	18.00	0.00	(6,451.00)
Public Works Floodplain	Gila County	(81.00)	0.00	0.00	(81.00)
RSSI	RECORD SEARCHING SERVICES INC	(219.00)	17.00	0.00	(202.00)
RUI	RESEARCH UNLIMITED INC	(83.00)	0.00	0.00	(83.00)
simplifile	Simplifile - eRecording	(2,285.00)	13,620.00	(13,620.00)	(2,285.00)
SOUTHWES DIV	FIRST AMERICAN TITLE	(979.20)	0.00	0.00	(979.20)
TD	Timely Documents	(98.00)	0.00	0.00	(98.00)
ZILL	ZILLOW	(950.00)	190.00	0.00	(760.00)

House Account Summary

Gila County AZ Recorder

For the Period of 08/01/2020 - 08/31/2020

Immediate and Deferred Accounts

House Account ID	House Account Name	Starting Balance	Charges	Payments	Ending Balance
Totals		**(33,613.70)**	**33,486.00**	**(34,840.00)**	**(34,967.70)**

GILA COUNTY TREASURER'S RECEIPT
GILA COUNTY, ARIZONA

DATE 9/28/20

CONTRACT #

GRANT #

DEPOSIT TO FUND General FUND # 1005

REMITTING AGENCY Recorder (120)

BILLING PERIOD August 1-31, 2020

Account Code	Direct Deposit / Check #	Revenue Description	Amount	
1005.120.3400.99		Recording Fee	36979	15
7145.120.3400.99		Recording Storage	5544	—
7147.120.3400.99		Computer Svs	1080	75
7146.120.3400.99		Mining Fee (county)	25	—
7146.120.3400.99		Mining Fee (state)	100	—
			43728	90

Preparer Signature: Title Chief Deputy

Approved Signature: Sandra Bagley Title Recorder

SUMMARY OF DEPOSIT

Currency	
Coins	
Checks	43728.90
Total	43728.90

TREASURER By Donna Gill Roberts Date 9-28-2020

ORIGINAL OFFICE

145216

ARF-6300 **Executive Session Item 7. A.**

Regular BOS Meeting

Meeting Date: 10/06/2020

Submitted For: Jefferson Dalton, Deputy County Attorney, Civil Bureau Chief

Submitted By: Marian Sheppard, Clerk of the Board

Department: County Attorney

Information

Request/Subject

There is multi-district opioid litigation. This matter is concerning negotiations toward potential settlement thereof. The Gila County Attorney requests that the Gila County Board of Supervisors hold an executive session regarding the matter. An executive session is sought for the purpose of seeking legal advice pursuant to A.R.S. 38-431.03(A)(3) and (4).

Background Information

The people of the State of Arizona, and other states have been harmed by the opioid epidemic caused by entities within the pharmaceutical-supply chain. The state and certain local governments are separately engaged in litigation seeking to hold them accountable for their damage they caused. Settlement negotiations are underway.

On August 17, 2020, Jefferson Dalton, Deputy Gila County Attorney and Civil Bureau Chief, met with the Board of Supervisors in executive session to discuss settlement negotiations in multi-district opioid litigation. The Gila County Attorney's Office has been apprised of some new information pertaining to settlement negotiations in multi-district opioid litigation which needs to be presented to the Board of Supervisors.

Evaluation

The Board of Supervisors needs to be presented with the most recent information pertaining to the settlement of opioid litigation-related claims held by Gila County and provide direction to its attorney, so an executive session is appropriate.

Conclusion

It is appropriate that the Gila County Board of Supervisors hold an executive session under A.R.S. Section 38-431.03(A)(3) and (4) to discuss the most recent settlement negotiations in multi-district opioid litigation.

Recommendation

The Gila County Attorney's Office recommends that the Gila County Board of Supervisors vote to go into executive session, under A.R.S. Section 38-431.03(A)(3) and (4), to discuss and consult with its attorneys regarding settlement negotiations in multi-district opioid litigation.

Suggested Motion

Information/Discussion/Action: Vote to go into executive session pursuant to A.R.S. § 38-431.03(A)(3) and (4) to discuss settlement negotiations in multi-district opioid litigation. **(Jefferson Dalton)**

Attachments

No file(s) attached.