PURSUANT TO A.R.S. §38-431.01, THE GILA COUNTY BOARD OF SUPERVISORS WILL HOLD AN OPEN MEETING IN THE SUPERVISORS' HEARING ROOM, 1400 EAST ASH STREET, GLOBE, ARIZONA. ONE OR MORE BOARD MEMBERS MAY PARTICIPATE IN THE MEETING BY TELEPHONE CONFERENCE CALL OR BY INTERACTIVE TELEVISION VIDEO (ITV). **ANY MEMBER OF THE PUBLIC IS WELCOME TO ATTEND THE MEETING VIA ITV WHICH IS HELD AT 610 E. HIGHWAY 260, BOARD OF SUPERVISORS' CONFERENCE ROOM, PAYSON, ARIZONA.** THE AGENDA IS AS FOLLOWS:

REGULAR MEETING - TUESDAY, MARCH 21, 2017 - 10:00 A.M.

1. **CALL TO ORDER - PLEDGE OF ALLEGIANCE - INVOCATION**

2. **PRESENTATIONS:**

A.	Presentation of information on the recent activities of Gila Community College. **(Stephen Cullen)**	Presented

3. **REGULAR AGENDA ITEMS:**

A.	Information/Discussion/Action to approve the use of the State of Arizona Procurement Office Contract No. ADSPO16-00005912 with Atwell whereby the consultant will provide expansion services for the Phase 3 Buckhead Mesa Landfill Expansion. **(James Menlove/Steve Sanders)**	Approved
B.	Information/Discussion/Action to approve the use of the State of Arizona Procurement Office Contract No. ADSPO12-013788 with SD Crane Builders, Inc. for the construction of interior improvements, exterior improvements and all associated facets of remodel on the Globe Courthouse building in the amount of $369,880.20 with estimated completion 60 days from the date of the "Notice to Proceed" issued by the County to SD Crane Builders, Inc. **(James Menlove/Steve Sanders)**	Approved

4. **CONSENT AGENDA ACTION ITEMS: (Any matter on the Consent Agenda will be removed from the Consent Agenda and discussed and voted upon as a regular agenda item upon the request of any member of the Board of Supervisors.)**

A.	Approval of Amendment No. 2 to an Intergovernmental Agreement (Contract No. ADHS17-133182) between the Arizona Department of Health Services and the Gila County Health and Emergency Management Division for $24,029.43 in order to provide continued public health emergency preparedness services.	Approved
B.	Approval to appoint Robert Solberg to the Public Safety Personnel Retirement System (PSPRS) Local Board of Directors for the term beginning on March 21, 2017, through December 31, 2020; and acknowledgment of the election of Johnny Holmes to said Local Board for the term beginning on February 7, 2017, through December 31, 2020.	Approved
C.	Acknowledgment of Karol Clark's resignation from the Pleasant Valley Fire District Board of Directors and the appointment of Peter Elenius to fulfill Mrs. Clark's unexpired term, effective December 14, 2016, through December 31, 2016, and to acknowledge the reappointment of Peter Elenius' term beginning January 18, 2016, and ending December 31, 2020.	Acknowledged
D.	Acknowledgement of the January 2017 monthly activity report submitted by the Payson Regional Justice of the Peace's Office.	Acknowledged
E.	Acknowledgment of the February 2017 monthly activity report submitted by the Globe Regional Justice of the Peace's Office.	Acknowledged

F.	Acknowledgment of the February 2017 monthly activity report submitted by the Payson Regional Constable's Office.	Acknowledged
G.	Acknowledgment of the February 2017 monthly departmental activity report submitted by the Globe Regional Constable's Office.	Acknowledged
H.	Acknowledgment of the February 2017 monthly activity report submitted by the Clerk of the Superior Court's Office.	Acknowledged
I.	Acknowledgment of the February 2017 monthly activity report submitted by the Recorder's Office.	Acknowledged
J.	Approval of the March 7, 2017, Board of Supervisors' meeting minutes.	Approved
K.	Acknowledgment of contracts under $50,000 which have been approved by the County Manager for the week of February 13, 2017, through February 17, 2017; and February 20, 2017, through February 24, 2017.	Acknowledged
5.	**CALL TO THE PUBLIC:** Call to the Public is held for public benefit to allow individuals to address the Board of Supervisors on any issue within the jurisdiction of the Board of Supervisors. Board members may not discuss items that are not specifically identified on the agenda. Therefore, pursuant to Arizona Revised Statute §38-431.01(H), at the conclusion of an open call to the public, individual members of the Board of Supervisors may respond to criticism made by those who have addressed the Board, may ask staff to review a matter or may ask that a matter be put on a future agenda for further discussion and decision at a future date.	No Comments

6.	At any time during this meeting pursuant to A.R.S. §38-431.02(K), members of the Board of Supervisors and the County Manager may present a brief summary of current events. No action may be taken on information presented.	Presented

IF SPECIAL ACCOMMODATIONS ARE NEEDED, PLEASE CONTACT THE RECEPTIONIST AT (928) 425-3231 AS EARLY AS POSSIBLE TO ARRANGE THE ACCOMMODATIONS. FOR TTY, PLEASE DIAL 7-1-1 TO REACH THE ARIZONA RELAY SERVICE AND ASK THE OPERATOR TO CONNECT YOU TO (928) 425-3231.
THE BOARD MAY VOTE TO HOLD AN EXECUTIVE SESSION FOR THE PURPOSE OF OBTAINING LEGAL ADVICE FROM THE BOARD'S ATTORNEY ON ANY MATTER LISTED ON THE AGENDA PURSUANT TO A.R.S. §38-431.03(A)((3)
THE ORDER OR DELETION OF ANY ITEM ON THIS AGENDA IS SUBJECT TO MODIFICATION AT THE MEETING

ARF-4224 **Presentation** **2. A.**

Regular BOS Meeting

Meeting Date: 03/21/2017

Submitted By: Marian Sheppard, Clerk of the Board

Department: Clerk of the Board of Supervisors

Information

Request/Subject

Update on recent activities of Gila Community College

Background Information

Dr. Stephen Cullen, District Senior Dean of Gila Community College, has made a request to provide a presentation to the Board of Supervisors regarding the recent activities of the College.

Evaluation

It would beneficial for the Board to be provided an update on the recent activities of Gila Community College to include the Globe Campus, San Carlos Campus and the Payson Campus.

Conclusion

It would be advantageous for the Board and the public to receive an update on College activities.

Recommendation

N/A

Suggested Motion

Presentation of information on the recent activities of Gila Community College. **(Stephen Cullen)**

Attachments

GCC Presentations

Gila Community College

2016/2017

Gila County Provisional Community College
Globe ~ Payson

Gila Community College has campuses in Globe and Payson. Gila Community College is a provisional community college and plays a vital role in the economic development of Gila County and the surrounding rural areas. The college is paramount in attracting new industry to the area. The college has strong support from the community.

STUDENTS

- Gila Community College's full-time students equivalent (FTSE) was 672 for the 2015/2016 academic year.
- Gila Community College is providing postsecondary educational services to over 1,166 students in Gila County this spring 2017 semester.

Gila Community College Administration

Dr. Stephen Cullen, Senior Dean
Patricia Burke, Gila Pueblo Campus Dean
Pamela Butterfield, Payson Campus Dean

Gila Community College 2017 Governing Board

Jay Spehar, President
Janet Brocker, Secretary
Samuel I. Moorhead
Kurt Knauss
Jennifer White

Gila Community College													
State Funding FY 2004 - FY 2016													
Fiscal Year:	FY 2004	FY 2005	FY 2006	FY 2007	FY 2008	FY 2009	FY 2010	FY 2011	FY 2012	FY 2013	FY 2014	FY 2015	FY 2016
Funding	$ -	$ -	$ 335,700	$ 359,800	$ 753,900	$ 713,000	$ 658,400	$ 658,400	$ 428,100	$ 410,000	$ 370,700	$ 346,300	$ 368,100

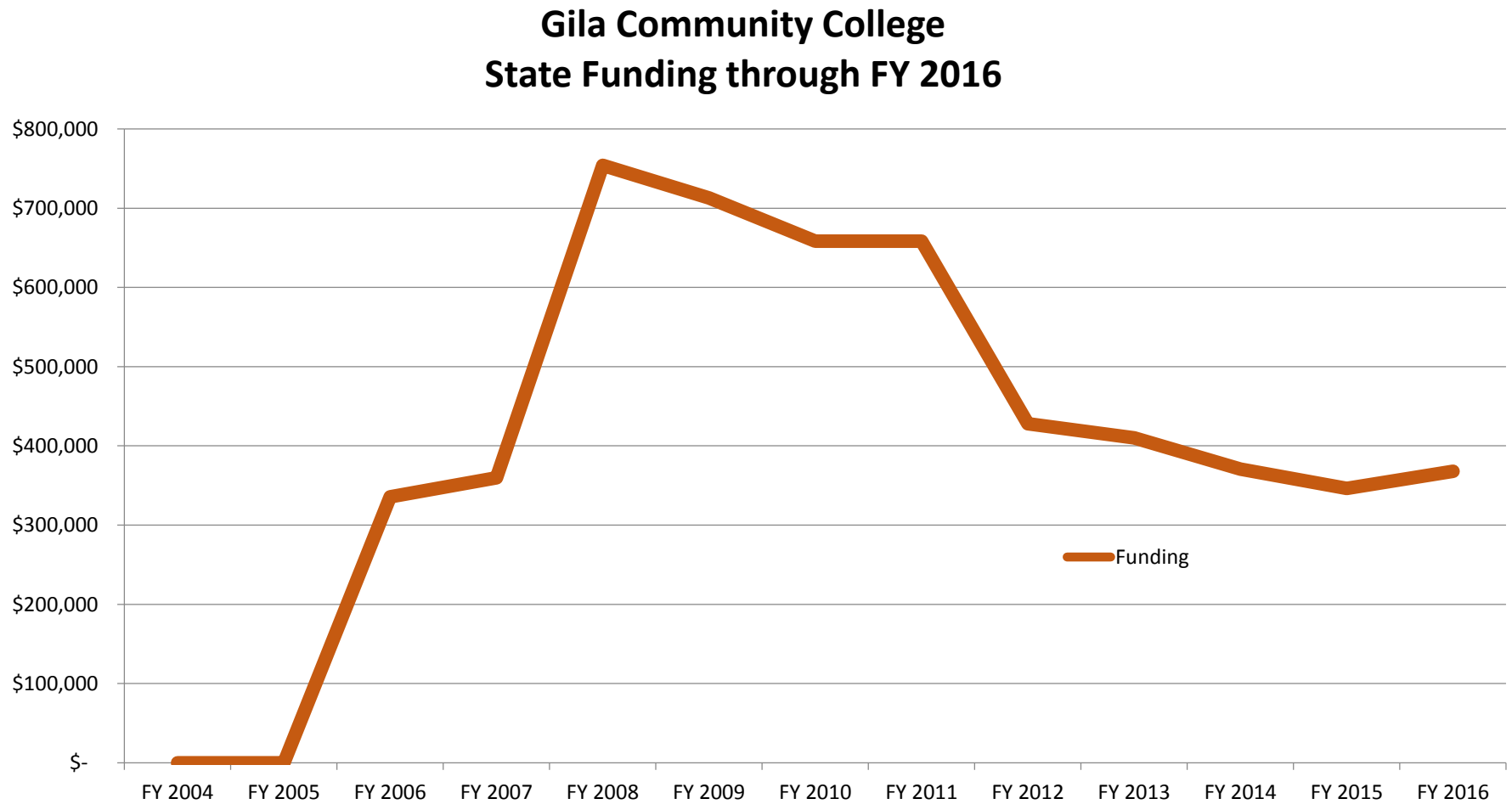

Economic Challenges

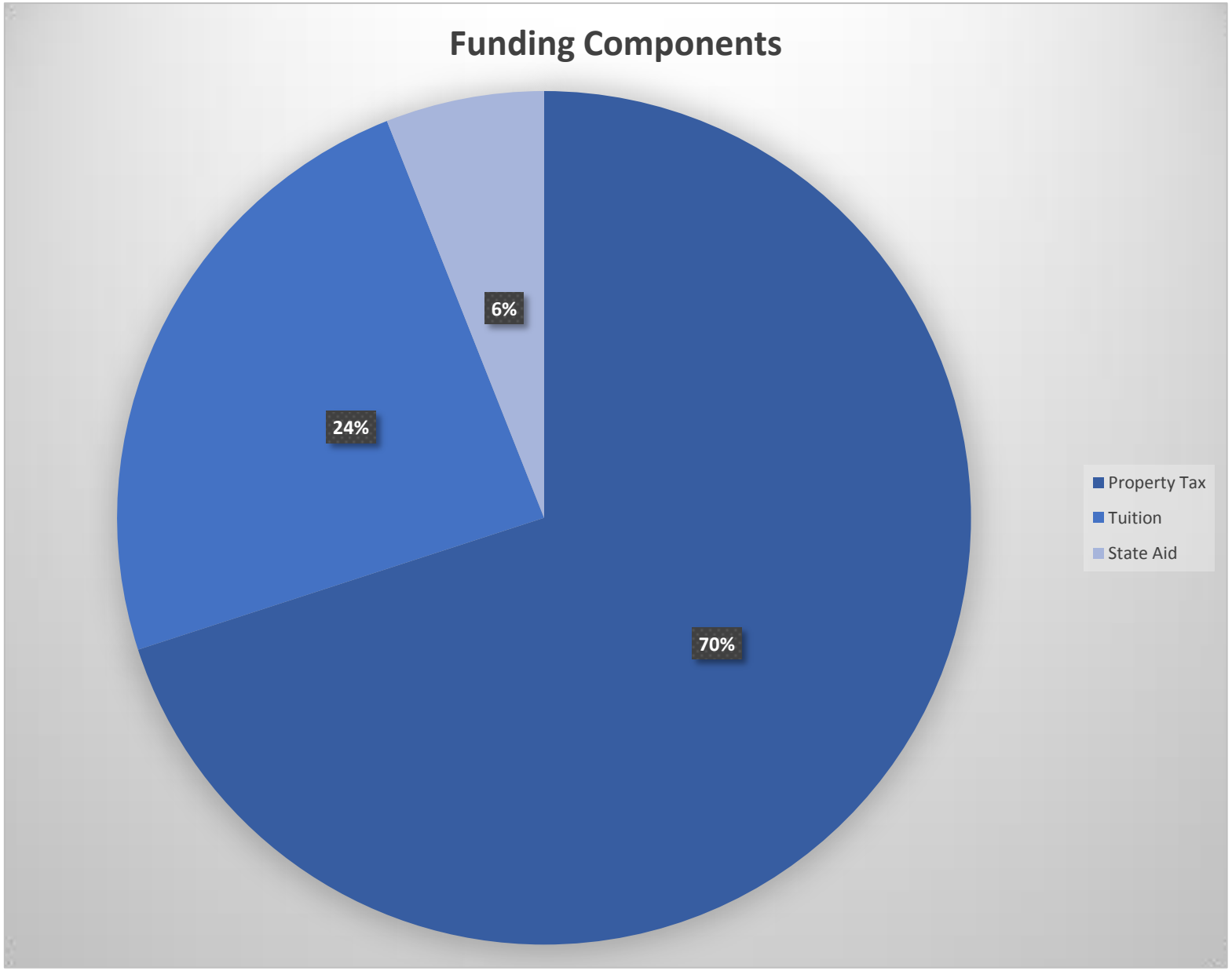

Gila Community College

2016/2017 Programs

Globe	Payson	Hayden/Winkelman
Bookkeeping - Cert	AGEC-A - Cert	AGEC-A - Cert
Business - AAS	AGEC-B - Cert	AGEC-B - Cert
Business Adm - AA	AGEC-S - Cert	AGEC-S - Cert
Building & Construction Trades	Business Adm - AA	Gen Business - AAS
Building Energy Auditor	Bookkeeping - Cert	Liberal Studies - AA
CIS - ABus	Business - AAS	
CNA - State Cert	CIS - ABus	
Cosmetology - AAS & Cert	CNA - State Cert	
Dental Assistant Specialist - Cert	Casino Mgmt - Cert	
Early Child Ed - AAS	Cosmetology - AAS & Cert	
Education - AA	Early Child Ed - AAS	
Electrical & Inst Tech - AAS	Education - AA	
EMT - State Cert	EMT - State Cert	
Fire Science - AAS	Fire Science - AAS	
General Studies - AGS	General Studies - AGS	
General Technical Studies - AAS	General Technical Studies - AAS	
Industrial Plant Tech - AAS	Lab Assistant - Cert	
Liberal Studies - AA	Liberal Studies - AA	
Medical Assistant - Cert	Medical Assist - Cert	
Medical Coding & Billing - Cert	Medical Coding & Billing - Cert	
Nail Technician - Cert	Nail Technician - Cert	
Nursing - AAS	Nursing - AAS	
Office Service - AAS	Office Service - AAS	
Phlebotomy - Cert	Pharmacy Tech - Cert	
Renewable Energy - Cert	Phlebotomy - Cert	
Sports Medicine - Cert	Small Bus Mgmt - AAS	
Small Bus Mgmt - AAS	Word Proc Spc - Cert	
Welding - Cert		
Word Proc Spc - Cert		

Gila Community College has access to over 95 degree and certificate programs through Eastern Arizona College. The above programs will vary from year to year based on community needs.

Gila County Workforce Development Courses and Programs
A 5-Step Process

1. A survey is conducted with local businesses and industry to assess the workforce needs of the organizations throughout Gila County.

2. A second survey is conducted to assess the interest level of local adult learners for a proposed program.

3. If industry needs correlate with the interest of Gila County adult learners, the individual course designs are written based on the industry standards.

4. After course designs are completed, a certificate of proficiency or associate of applied science degree is written, which includes both the workforce curriculum and general education requirements.

5. Once the certificate and/or course are written, the final draft is presented to the academic planning and steering committee of Eastern Arizona College. The planning and steering committee consists of department chairs and deans. Once the certificates and/or courses are approved, classes are scheduled.

PARTNERS

District Wide

Eastern Arizona College
Gila County
Arizona State University
Northern Arizona University
Area Fire Departments
Gila County Superintendent of Schools
Arizona Public Service (APS)
Arizona Archaeological Society
Arizona Department of Economic Security
Arizona Department of Revenue
Arizona State Land Office
Arizona Supreme Court
Arizona Department of Transportation
The Workforce Innovation and Opportunity Act (WIOA)
Central Arizona Association of Governments (CAAG)
Re-employment and Pre-layoff Assistance Center (REPAC)
U.S. Forest Service

Gila Pueblo Campus

City of Globe
Town of Miami
Freeport-McMoRan
Capstone Pinto Valley Mining
Resolution Copper Mining
Cobre Valley Institute of Technology (CVIT)
Cobre Valley Country Club (CVCC)
Cobre Valley Regional Medical Center (CVRM)
The Haven of Globe Long Term Healthcare Facility
Heritage Health Care
Gila County
Gila County Unified School Districts including:
- Globe, Hayden-Winkelman, Miami,
- Superior, and Young

United Rentals
BlueLine Rental
Resolution Copper
Aviant Hospice

Payson Campus

Town of Payson
Northern Arizona Vocational Institute of Technology (NAVIT)
Mazatzal Casino
Payson Unified School District
Banner Payson Medical Center
Gracie Haught Center

Gila Community College

Creating futures everyday…

May 2016 Gila Community College Graduates

Gila Pueblo Campus

Payson Campus

ARF-4222 **Regular Agenda Item 3. A.**

Regular BOS Meeting

Meeting Date:	03/21/2017		
Submitted For:	Steve Sanders, Director		
Submitted By:	Betty Hurst, Contracts Administrator		
Department:	Finance		
Fiscal Year:	2016-2017	Budgeted?:	Yes
Contract Dates Begin & End:	Twelve Months	Grant?:	No
Matching Requirement?:	No	Fund?:	Renewal

Information

Request/Subject

Approval to use State of Arizona Contract No. ADSPO16-00005912 with Atwell for Phase 3 Buckhead Mesa Landfill Expansion

Background Information

Rich Petrus, Team Leader with Atwell, has been the County's Landfill Consultant for the past 20 plus years. During that time Mr. Petrus developed expansion plans for both Buckhead and Russell Gulch. Mr. Petrus has also provided guidance and assistance with the Arizona Department of Environmental Quality (ADEQ) in getting the expansion plans approved and permitted.

The Scope of Work for expansion services includes:
1. Prepare Plans and Specifications, including the construction drawings and bid package.
2. Submit application for alternative cover and landfill height change.
3. Conduct pre-bid conference and bid support.
4. Conduct construction oversight.
5. Prepare and submit CQA certification report.

Evaluation

Atwell, through Rich Petrus, has vast historical knowledge of Buckhead Mesa Landfill, and the expansion and closure plan for the landfill. It is in the best interest of the County and the citizens to continue this relationship that has provided great benefit to Gila County and the citizens of the County.

Conclusion

The Public Works Division Director requests the approval of a contract with Atwell for the Phase 3 Buckhead Mesa Expansion. Gila County is a member of ProcureAZ, the State of Arizona's procurement agency for cooperative purchasing. By using the State of Arizona Contract No. ADSPO16-00005912 with Atwell, it will save the County both time and money for a rate that has already been established through the State of Arizona bidding process.

Recommendation

It is the recommendation of the Public Works Director that the Board of Supervisors approve the use of State of Arizona, State Procurement Office Contract No. ADSPO16-00005912 with Atwell for the Phase 3 Buckhead Mesa Landfill Expansion.

Suggested Motion

Information/Discussion/Action to approve the use of the State of Arizona Procurement Office Contract No. ADSPO16-00005912 with Atwell whereby the consultant will provide expansion services for the Phase 3 Buckhead Mesa Landfill Expansion. **(James Menlove/Steve Sanders)**

Attachments

Buckhead Mesa Phase 3 Proposal

ADSPO16-00005912 State Contract

PROPOSAL
FOR
PROFESSIONAL SERVICES

CLIENT	Gila County Recycling and Landfill Management	**DATE**	January 25, 2017
		PROPOSAL NO.	P10000213
ADDRESS	745 Rose Moffort Way Globe, AZ 85501	**TELEPHONE**	928.402.8531
		EMAIL	swinters@gilaco.az.us

PROPOSAL NAME **PHASE 3 BUCKHEAD MESA LANDFILL EXPANSION**

SITE LOCATION **PAYSON , AZ**

1.0 EXHIBIT A – SCOPE OF WORK:

Task 1 – Prepare Plans and Specifications
Atwell will develop plans and specifications for the expansion. The expansion design will include a system compatible with the previous expansion. The liner system will include, from top to bottom:

- One foot of protective cover
- Geonet for transmission of landfill leachate
- 60 ml HDPE liner
- Geosythetic Clay Liner
- Prepared subgrade

All design specifications will be developed in accordance with the Construction Specification Institute Standards. The plans will be in accordance with engineering best management standards and will tie into the previous construction stages. The following specifications will be included:

- General Requirements
- Mobilization/Demobilization
- Health and Safety
- Site Preparation and Earthwork
- Geocomposite
- Geomembrane Liners
- Geosynthetic Clay Liner

It is anticipated that the set of plans will include:

- Existing Conditions
- Subgrade Topography
- Cross-Sections and Details

Together the plans and specifications will serve as the Project Bid Documents and Specifications that will be available for qualified contractors to prepare bids for construction. The complete bid package is anticipated to include:

Preparation of detailed Construction Drawings and bid package shall include the following:

- Invitation to Bid
- Instructions to Bidders
- Scope of Work
- Schedule
- Bid Forms
- Contract
- Standard Terms and Conditions
- Exhibits
- Drawings with Specifications
    - Cover Sheet
    - Existing Conditions Plan/Demolition Plan
    - Landfill Closure Plan and Detail Sheets
    - Site Grading, Drainage and Soil Erosion/Sedimentation Control Plan
    - Detail and Specifications Sheet(s)
- CQA Plan
- Site Specific Contractor Health and Safety Plan
- Insurance Certificates
- Contract Forms (C.O., App for payment, substantial completion, etc)
- Construction Mgmt. Forms

Task 2 – Submit Application for Alternative Cover and Landfill Height Change

Atwell will meet with ADEQ Plan Review Unit prior to commencing the study and design work for the landfill expansion, alternative cover design, and increased landfill height. In this meeting Atwell will summarize the concept of landfill design, preliminary layouts and site map.

It is anticipated that a Type IV modification will be required for the alternative cover design and height change. Atwell will complete the application in accordance with the existing Application Plan Format. The final cover design will consist of an Evaporative Transpiration cover system similar to the one designed at the Russell Gulch Landfill. The proposed landfill height will increase 20 feet with a final elevation of approximately 5290 feet.

The alternative cover design will be evaluated using numerical simulations of a 30-year hypothetical weather series applied to a one-dimensional representation of the expansion. Simulations of precipitation to be used in the one-dimensional water balance modeling of the expansion cell will be used for evaluating infiltration in the prescriptive and variations of the alternative cover designs.

The alternative cover designs will then evaluated by comparing the simulated water fluxes though the alternative covers with the simulated water flux through the prescriptive final cover.
The numerical simulations will be conducted using HYDRUS 1-D (HYDRUS), a one-dimensional finite element model for simulating water flow in variably-saturated soils (Simunek et al., 2008). HYDRUS uses Richards' Equation to solve the variably saturated flow problem, and includes the hydrological processes relevant to landfill cover design: e.g., time variable precipitation and potential evaporation; root water uptake and root growth; and moisture retention – soil suction and hydraulic conductivity – moisture relationships. HYDRUS is widely used for modeling laboratory and field-scale applications, including alternative landfill cover design. A minimum of two alternative designs will be evaluated against the performance of the prescriptive cover. These designs will have variable thickness of cover, vegetative layers, and capillary breaks.
Slope Stability Analysis – Atwell does not anticipate a slope stability analysis will be needed for the increased height the final landfill configuration.

Task 3 - Conduct Pre-Bid Conference and Bid Support
Following completion of the bid documents, Atwell will assist in advertising the project and placing the documents in Plan Rooms in Phoenix. Atwell will serve as a distributor of the bid documents and will maintain a bidders list and addenda log.
Atwell will conduct a mandatory pre-bid conference at the landfill to discuss the project and allow prospective bidders to walk the site. Atwell will prepare an agenda for the meeting and will respond to all questions asked by prospective bidders in the form of an addendum.
Atwell will also attend the bid opening which is anticipated to be at the County offices and assist the County in the review, evaluation and award of the project.

Task 4 – Conduct Construction Oversight
Atwell will provide time and material (T&M) pricing for two (2) months of construction management services (4 weeks for soils and 2 weeks for geosynthetics) for the landfill closure project which will include, but not be limited to the following:

Atwell will provide professional staff to inspect, observe, and collect pertinent data, and to facilitate the construction efforts and provide some level of assurance that it is executed in accordance with the Contract Documents. Atwell will hire a geotechnical engineer to provide compaction testing during preparation of the prepared subgrade and foundation backfilling. Additionally, Atwell will compile all of the field testing (compaction testing, liner testing, liner repair) results, selected photographs during construction and required field notes. All test reports will be submitted to the County in a final construction report.

Atwell will review up to ten (10) contractor requests for information (RFI's) and provide written responses to same. Services will include review of shop drawings, which shall be submitted by contractor all at one time. Atwell will make every attempt to review shop drawings and return to contractor within three business days or less.

Atwell will also conduct and document discussions on weekly construction meetings. Develop a monthly report, including: weekly meeting notes, schedule progress status, projected tasks, relevant pictures and issues arising during that time period.

Task 5 – Prepare and Submit CQA Certification Report
Following completion of the construction phase, Atwell will prepare the Construction Quality Assurance (CQA) Certification Report. The CQA report will address the construction quality assurance of the soils, geosynthetics, and related liner components for landfill. The report will be divided into the following sections:

1.0 Introduction
2.0 Subgrade Excavation and Prepared Subgrade
3.0 Geosynthetic Clay Liner Installation
4.0 Geomembrane Liner Installation
5.0 Geocomposite Drainage Layer Installation (Leachate Collection System)
6.0 Protective Soil Layer Installation
7.0 Conclusions

Appendices included in the report will include, at a minimum:

Appendix A Project Personnel Contact List
Appendix B As-Built Drawings
Appendix C Soil Test Results
Appendix D Geosynthetic Test Results
Appendix E Daily CQA Reports
Appendix F Photo Documentation

Following approval of the certification report by the County, Atwell will submit the final version to ADEQ.

2.0 PROJECT UNDERSTANDINGS:

In preparing the proposal, we have assumed the following:

- Atwell will require access to the site.
- This proposal is predicated on the scope outlined herein.
- Any and all permit fees, applications fees, and review fees will be provided by the Client.
- This proposal is valid for a period of 30 days from the date of this proposal.
- Assumes a 6 week construction schedule

3.0 EXHIBIT B – SCOPE AND FEE PROPOSAL/WORK AUTHORIZATION:

Task	Task Description	Fee	Type	Approved (initial)
1-5	See Attached Table	$2,800	FF	

FF = Fixed Fee TME = Time & Materials

Atwell requires a retainer in the amount of **$0** prior to initiating work on the project. Invoices will be submitted monthly for work completed and payment is expected within sixty (60) days of the date of the invoice. In the event of non-payment, services may be suspended. The retainer will be applied to the final invoice for the project. Upon receipt of this signed proposal, work authorization, and retainer, Atwell will commit the staff and resources necessary to begin work on the project. Sub-consultant charges, fees, commissions, and out of town travel expenses will be billed at cost plus 15%. All other project related reimbursable expenses, including vehicle mileage, outside data reports, postage, shipping, reproductions, survey stakes and monuments, will be billed at an amount listed on Exhibit C. Billing will be made monthly for work accomplished during the previous month. Invoices are due and payable upon receipt. Interest will be charged at the rate of 1.5% per month (annual interest rate of 18%) commencing 30 days after date of invoice. All fees and hourly rates quoted within this contract may increase by 6% annually after the beginning of each year. The original Atwell Agreement is enforceable for all subsequent work orders. The Client shall pay all fees and permit charges.

Task 1 - Prepare Plans & Specifications

Labor		Rate	Hours	Extended
Project Manager		$ 169.00	40	$ 6,760.00
Sr. Project Engineer		$ 169.00	40	$ 6,760.00
Project Engineer		$ 128.00	120	$ 15,360.00
CADD Designer		$ 89.00	24	$ 2,136.00
Clerical		$ 70.00	8	$ 560.00
				$ 31,576.00
Expenses				
Miscellaneous		$ 100.00	1	$ 100.00
Getech tests of Borrow Soils		$ 6,760.00	1	$ 6,760.00
Reproduction	lump	$ 500.00	1	$ 500.00
Expense Total				$ 7,360.00
Task 1 Total				$ 38,936.00

Task 2 - Submit Application for Alternative Cover and Landfill Height Change

Labor		Rate	Hours	Extended
Project Manager		$ 169.00	16	$ 2,704.00
Sr. Project Engineer		$ 169.00	24	$ 4,056.00
Project Engineer		$ 128.00		$ -
Project Geologist		$ 115.00	4	$ 460.00
CADD Designer		$ 89.00	8	$ 712.00
Clerical		$ 70.00	4	$ 280.00
Labor Total				$ 8,212.00
Expenses				
Miscellaneous		$ 100.00	1	$ 100.00
Reproduction	lump	$ 100.00	1	$ 100.00
Expense Total				$ 200.00
Task 2 Total				$ 8,412.00

Task 3 - Conduct Pre-Bid Conference and Bid Support

		Rate	Hours	Extended
Project Manager		$ 169.00	8	$ 1,352.00
Sr. Project Engineer		$ 169.00	16	$ 2,704.00
Project Engineer		$ 128.00		$ -
Project Geologist		$ 115.00		$ -
CADD Designer		$ 89.00		$ -
Clerical		$ 70.00		$ -
Labor Total				$ 4,056.00
Expenses				
Vehicle	Miles	$ 180.00	0.55	$ 99.00
Reproduction	lump	$ 250.00	1	$ 250.00
Expense Total				$ 349.00
Task 3 Total				$ 4,405.00

Task 4 - Conduct Construction Oversight

		Rate	Hours	Extended
Project Manager		$ 169.00	64	$ 10,816.00
Sr. Project Engineer		$ 169.00	40	$ 6,760.00
Project Engineer		$ 128.00		$ -
Project Geologist		$ 115.00	320	$ 36,800.00
CADD Designer		$ 89.00	40	$ 3,560.00
Clerical		$ 70.00		$ -
Labor Total				$ 57,936.00
Expenses				
Vehicle	weeks	$ 250.00	8	$ 2,000.00
Per Diem	weeks	$ 600.00	8	$ 4,800.00
CQA Inspector	days	$ 1,425.00	25	$ 35,625.00
Geotech Lab Testing	lump	$ 5,000.00	1	$ 5,000.00
Subcon Fee		15%		$ 6,813.75
Expense Total				$ 47,425.00
Task 4 Total				$ 105,361.00

Task 5 - Prepare and Submit CQA Report

		Rate	Hours	Extended
Project Manager		$ 169.00	16	$ 2,704.00
Sr. Project Engineer		$ 169.00	24	$ 4,056.00
Project Engineer		$ 128.00	40	$ 5,120.00
Project Geologist		$ 115.00	40	$ 4,600.00
CADD Designer		$ 89.00	8	$ 712.00
Clerical		$ 70.00	8	$ 560.00
Labor Total				$ 17,752.00
Expenses				
Miscellaneous		$ 100.00	1	$ 100.00
Reproduction	lump	$ 250.00	1	$ 250.00
Expense Total				$ 350.00
Task 5 Total				$ 18,102.00

Project Total	$ 175,216.00

ATWELL, LLC PROFESSIONAL SERVICES
2016 FEE SCHEDULE

Labor Charges

Senior Project Manager $190/hour
Project Manager I-II ..... $154 to $169/hour
Project Coordinator $139/hour

Engineering Services
- **Senior Project Engineer** $169/hour
- **Engineer/Designer I-V** ..... $102 to $154/hour
- **Engineer Technician** $95/hour

Surveying Services
- **Senior Project Surveyor** $169/hour
- **Project Surveyor I-V** ..... $102 to $154/hour
- **Survey Technician** $95/hour
- **One Man Crew** $124/hour
- **Two Man Crew** ..... $151 to $176/hour

Planning/Landscape Design Services
- **Senior Project Planner** $169/hour
- **Planner/Designer I-V** ..... $102 to $154/hour
- **Planning Technician** $95/hour

Environmental/Ecological Services
- **Senior Subject Matter Expert I-II** ..... $190 to $203/hour
- **Senior Environmental Consultant** $169/hour
- **Environmental Consultant I-V** ..... $102 to $154/hour
- **Environmental Technician I-III** ..... $70 to $89/hour

CAD/GIS Services
- **CAD Technician I-II** ..... $81 to $89/hour
- **Senior GIS Analyst** $125/hour
- **GIS Analyst I-II** ..... $102 to $115/hour
- **GIS Technician I-II** ..... $82 to $89/hour

Construction Services
- **Construction Manager I-II** ..... $139 to $154/hour
- **Construction Engineer I-III** ..... $102 to $125/hour
- **Construction Inspector** $83/hour

Administrative Services/Interns ..... $65 to $86/hour
Firm Principal/Project Executive $235/hour
Expert Testimony $295/hour

Direct Reimbursable

ATWELL

ATWELL, LLC PROFESSIONAL SERVICES
2016 FEE SCHEDULE

Non-Labor Charges

Office:

24" X 36" bond black and white plots/copies	$1.50/each
24" X 36" bond black and white mylars	$10/each
24" X 36" color plots/copies	$25/each
8.5" X 11" black and white plots/copies	$0.15/each
8.5" X 11" color plots/copies	$1/each
11" X 17" black and white plots/copies	$0.25/each
11" X 17" color plots/copies	$1.50/each
County GIS Data	cost + 10%
Postage & Shipping	cost + 10%
Conference Calls	cost + 10%
Recording Fees	cost + 10%
Misc./Out of Pocket Expenses	cost + 10%

Field Equipment:

RTK GPS Unit w/ Data Collector	$225/day
Robotic T.S. w/ Data Collector	$50/day
Photoionization Detector (PID)	$100/day
Ground Penetrating Radar (GPR)	$325/day
Laser Scanner	$1,000/day
Pipe Locator	$15/day
4-Gas Monitor w/ Remote Sensor	$75/day
ATV/Gator + Trailer	$325/day

Field Materials:

Wood Stakes	$1/stake
Iron Pipes	$2/pipe
Monuments (Concrete)	$10/each
Monuments (Brass)	$18/each
Monuments (Aluminum)	$12/each

Miscellaneous:

Mileage*	IRS RATE
Auto Rental	cost + 10%
Air Fare	cost + 10%
Lodging**	cost + 10%
Meals**	cost + 10%
Project Sub-consultants	cost + 15%

* Company Vehicle Mileage subject to change and shall be billed at current IRS allowable rate.

** Travel Costs as noted, unless otherwise agreed to as a per diem charge per contract.
All permit, application, and submittal fees shall be paid directly by the client.

Direct Reimbursable

Offer and Acceptance

SOLICITATION NO.: ADSPO16-00005912 Request for Qualifications: 2016 Annual Professional Services List

PAGE 1 OF 1

Offeror: Atwell, LLC

State of Arizona
State Procurement Office
100 N. 15th Ave. Suite 201
Phoenix, AZ 85007

OFFER

TO THE STATE OF ARIZONA:

The Undersigned hereby offers and agrees to furnish the material, service or construction in compliance with all terms, conditions, specifications and amendments in the Solicitation and any written exceptions in the offer. Signature also certifies Small Business status.

Atwell, LLC
Company Name

4700 E. Southern Avenue
Address

Mesa | AZ | 85206
City | State | Zip

tnorthrop@atwell-group.com
Contact Email Address

Signature of Person Authorized to Sign Offer

Ted Northrop Jr, PE
Printed Name

Vice President
Title

Phone: (480) 218-8831

Fax: (480) 830-4888

By signature in the Offer section above, the Offeror certifies:

1. The submission of the Offer did not involve collusion or other anticompetitive practices.
2. The Offeror shall not discriminate against any employee or applicant for employment in violation of Federal Executive Order 11246, State Executive Order 2009-9 or A.R.S. §§ 41-1461 through 1465.
3. The Offeror has not given, offered to give, nor intends to give at any time hereafter any economic opportunity, future employment, gift, loan, gratuity, special discount, trip, favor, or service to a public servant in connection with the submitted offer. Failure to provide a valid signature affirming the stipulations required by this clause shall result in rejection of the offer. Signing the offer with a false statement shall void the offer, any resulting contract and may be subject to legal remedies provided by law.
4. The Offeror certifies that the above referenced organization ___ **IS/** ___ **IS NOT** a small business with less than 100 employees or has gross revenues of $4 million or less.

ACCEPTANCE OF OFFER

The Offer is hereby accepted.

The Contractor is now bound to sell the materials or services listed by the attached contract and based upon the solicitation, including all terms, conditions, specifications, amendments, etc. and the Contractor's Offer as accepted by the State.

This Contract shall henceforth be referred to as Contract No. ADSPO16-00005912.

The effective date of the Contract is March 2, 2016.

The Contractor is cautioned not to commence any billable work or to provide any material or service under this contract until Contractor receives purchase order, contact release document or written notice to proceed.

State of Arizona Awarded this 26 **day of** February 20 16

Procurement Officer

DEFINITIONS

Architect Services, Engineer Services, Land Surveying Services, Assayer Services, Geologist Services and Landscape Architect Services: Those professional services within the scope of the practice of those services as provided in ARS § 32-101.

Branch Office: A geographically distinct place of business or subsidiary office of a firm that has a key role on the team.

Discipline: Primary technical capabilities of key personnel, as evidenced by academic degree, professional registration, certification, and/or extensive experience.

Firm: Defined in ARS § 32-101(B.19.).

Key Personnel: Individuals who will have major contract responsibilities and/or provide unusual or unique expertise.

SPECIFIC INSTRUCTIONS:

1 . Complete this form for each branch office seeking work under this RFQ.

a . – e. **Firm (or Branch Office) Name and Address.** Self-explanatory.

f. **Year Established**. Enter the year the firm (or branch office, if appropriate) was established under the current name.

g. **Ownership**.

(g1). *Type*. Enter the type of ownership or legal structure of the firm (sole proprietor, partnership, corporation, joint venture, etc.).

(g2). *Small Business Status*. A firm is a small business if the firm has less than 100 employees **or** has gross revenues of $4 million or less.

h.-j. **Point of Contact**. Provide this information for a representative of the firm that the Customer can contact for additional information. The representative must be empowered to speak on contractual and policy matters.

k. **Name of Firm**. Enter the name of the firm.

2. **Employees by Discipline**.

a. Select disciplines from the List of Disciplines (Function Code) listed on Page 3 of 4 Instructions. For employees that do not qualify for any of the disciplines, select “Other”. *Note: The intended searchable database indicated in the RFQ will be populated from the Qualifications Form I Excel attachment only.*

b. Each person can be counted only twice; once for his/her primary function and once for his/her secondary function. Primary and secondary functions should be indicated by including a “P” or an “S” in column b after the Description Title is given.

c-d. If the form is completed for a firm (including all branch offices), enter the number of employees by disciplines in column c. If the form is completed for a branch office, enter the number of employees by discipline in column d and for the firm in column c.

3. **Profile of Firm's Experience and Annual Average Revenue for Last Year**.

a. Enter the approximate number of projects the firm (or branch) has done attributable by Profile Code listed on Page 3 of 4 Instructions over the last year.

b. Enter the appropriate Profile Codes from Instructions Pages 3 of 4 that represent the type of work the firm (or branch) has done over the last year.

c. Using the Revenue Index Number on Page 3 of 6 Form, indicate the approximate revenue the firm has earned over the last year per Profile Code entered into the table.

4. **Resumes of Key Personnel Proposed for This Contract.** Complete this section for each key person who will participate in this contract.

   a. Self-explanatory.
   b. Self-explanatory
   c. Total years of relevant experience (block c1), and years of relevant experience with current firm, but not necessarily the same branch/office (block c2).
   d. Name, City and State of the firm where the person currently works, which must correspond with one of the firms (or branch office or a firm, if appropriate) listed in Section 1.
   e. Provide information on the highest relevant academic degree(s) received. Indicate the area(s) of specialization for each degree.
   f. Provide information on current relevant professional registration(s) and in which State(s) they are current.
   g. Provide information on any other professional qualifications relating to this contract, such as education, professional registration, publications, organizational memberships, certifications, training, awards, and foreign language capabilities.
   h. Provide information on no more than five (5) projects in the last year which the person had a significant role that demonstrates the person's capability relevant to her/his proposed role in this contract. These projects do not necessarily have to be any of the projects presented in Section 5 for the project team if the person was not involved in any of those those projects or the person worked on other projects that were more relevant than the team projects in Section 5. Use the check box provided to indicate if the project was performed with any office of the current firm. If any of the professional services or construction projects are not complete, leave Year Completed blank and indicate the status in Brief Description and Specific Role.

5. **Example Projects Which Best Illustrate Firms Qualification for this contract.** Select project where multiple team members worked together, if possible, that demonstrate the team's capability to perform work similar to that required for this contract. Complete one Section 5 for each project. List no more than five (5) projects.

   a. Title and Locations of project or contract. For an indefinite delivery contract, the location is the geographic scope of the contract.
   b. Enter the year completed of the professional services (such as planning, engineering study, or design), and/or the year completed if construction. If any of the professional services or the construction projects are not complete, leave Year Completed blank and indicate the status in Brief Description of Project and Relevance to This Contract (block f).
   c. Project Owner or user, such as a government agency or installation, an institution, a corporation or private individual.
   d. Provide the original budget or not to exceed dollar amount for the project.
   e. Provide the Total Cost of the Project. If any of the professional services or construction projects is not complete, indicate the percentage compete and whether this project will be on budget, over or under budget.
   f. Brief Description: Indicate scope, size, and length of project, principle elements and special features of the project. Discuss the relevance of the example project to this contract.

6. **Additional Information**. Use this section to provide additional information you feel may be necessary to describe your firm's qualifications for this contract.

7. **Annual Average Professional Services Revenues of Firm for Last 3 Years**. Complete this block for the firm or branch office for which this form is completed. In column a, enter an approximate percentage of total work attributable to State, Federal or Municipal Work. In column b, enter an approximate percentage of total work attributable to Non-Government work. Percentages should take into consideration work completed over the last 3 years.

8. **Authorized Representative**. An authorized representative of the firm or branch office must sign and date the completed form. Signing attests that the information provided is current and factual. Provide the name and title of the authorized representative who signed the form.

List of Disciplines (Function Codes) for Question 2

Aeronautical Engineer
Agricultural Engineer
Archeologist
Architect
Architectural Engineering
Biologist
CADD Technician
Chemical Engineer
Civil Engineer
Construction Manager
Construction Inspector
Control Systems Engineer
Cost Engineer/Estimator
Ecologist
Electrical Engineer
Environmental Engineer
Environmental Scientist
Fire Protection Engineer
Geodetic Surveyor
Geographic Information System Specialist
Geological Engineer
Geologist
Hydrographic Surveyor
Hydraulic Engineer
Hydrologist
Industrial Engineer
Landscape Architect
Mechanical Engineer
Metallurgical Engineer
Mining Engineer
Nuclear Engineer
Petroleum Engineer
Photogrammetrist
Project Manager
Sanitary Engineer
Soils Engineer
Structural Engineer
Technician/Analyst
Transportation Engineer
Water Resources Engineer

List of Experience Categories (Profile Codes for Question 3)

Acoustics, Noise Abatement
Aerial Photography; Airborne Data and Imagery Collection and Analysis
Activity Centers
Air Pollution Control
Airports; Navaids; Airport Lighting; Aircraft Fueling
Airports; Terminals and Hangars; Freight Handling
Agricultural Development; Grain Storage; Farm Mechanization
Animal Facilities
Anti-Terrorism/Force Protection
Area Master Planning
Auditoriums and Theaters
Automation; Controls; Instrumentation
Barracks; Dormitories
Bridge Design: Bridges
Cartography
Cemeteries *(Planning and Relocation)*
Chemical Processing and Storage
Child Care/Development Facilities
Codes; Standards; Ordinances
Cold Storage; Refrigeration and Fast Freeze
Commercial Building *(Low Rise)*; Shopping Centers
Community Facilities
Communications Systems; TV; Microwave
Computer Facilities
Conservation and Resource Management
Construction Management
Construction Surveying
Corrosion Control; Cathodic Protection Electrolysis
Cost Estimating; Cost Engineering and Analysis; Parametric Costing; Forecasting
Cryogenic Facilities
Construction Materials Testing
Dams *(Concrete; Arch)*
Dams *(Earth; Rock)*; Dikes; Levees
Desalinization *(Process and Facilities)*
Design-Build - Preparation of Requests for Proposals
Digital Elevation and Terrain Model Development
Digital Orthophotography
Dining Halls; Clubs; Restaurants
Dredging Studies and Design
Design & Planning Structured Parking Facilities
Detention Security Systems
Disability / Special Needs
Ecological and Archeological Investigations
Educational Facilities; Classrooms
Electrical Studies and Design
Electronics
Elevators; Escalators; People-Movers
Energy / Water Auditing Savings
Energy Conservation; New Energy Sources
Environmental Impact Studies, Assessments or Statements
Fallout Shelters; Blast-Resistant Design
Fire Protection
Fisheries; Fish Ladders
Forensic Engineering
Garages; Vehicles Maintenance Facilities; Parking
Gas Systems *(Propane; Natural, Etc.)*
Geodetic Surveying: Ground and Airborne
Heating; Ventilating; Air Conditioning
Highways; Streets; Airfield Paving; Parking Lots
Historical Preservation
Hospital and Medical Facilities
Hotels; Motels
Housing (Residential, Multi-Family; Apartments; Condominiums)

Hotels; Motels
Hydraulics and Pneumatics
Hydrographic Surveying
Industrial Buildings; Manufacturing Plants
Industrial Processes; Quality Control
Industrial Waste Treatment
Intelligent Transportation Systems
Infrastructure
Irrigation; Drainage
Judicial and Courtroom Facilities
Laboratories; Medical Research Facilities
Land Surveying
Landscape Architecture
Libraries; Museums; Galleries
Lighting *(Interior; Display; Theater, Etc.)*
Lighting *(Exteriors; Streets; Memorials; Athletic Fields, Etc.)*
Labs - General
Labs – Research – Dry
Labs – Research – Wet
LEED Accredited A/E
LEED Independent 3rd Party Building Commissioning
Mapping Location/Addressing Systems
Materials Handling Systems; Conveyors; Sorters
Metallurgy
Materials Testing
Measurement / Verification / Conservation Water Consumption Savings
Mining and Mineralogy
Medical Related
Modular Systems Design; Fabricated Structures or Components
Mold Investigation
Museums
Nuclear Facilities; Nuclear Shielding
Office Buildings; Industrial Parks
Outdoor Recreation
Petroleum and Fuel *(Storage and Distribution)*
Photogrammetry
Pipelines *(Cross-Country - Liquid and Gas)*
Phase I Environmental
Prisons & Correctional Facilities
Plumbing and Piping Design
Prisons and Correctional Facilities
Product, Machine Equipment Design Pneumatic
Structures, Air-Support Buildings Power Generation,
Transmission, Distribution Public Safety Facilities
Radar; Sonar; Radio and Radar Telescopes
Radio Frequency Systems and Shielding's
Railroad; Rapid Transit
Recreation Facilities *(Parks, Marinas, Etc.)*
Refrigeration Plants/Systems
Rehabilitation *(Buildings; Structures; Facilities)*
Research Facilities
Resources Recovery; Recycling
Roof Infrared Imaging to Identify Water Leaks
Roofing
Safety Engineering; Accident Studies; OSHA Studies
Security Systems; Intruder and Smoke Detection
Seismic Designs and Studies
Sewage Collection, Treatment and Disposal
Soils and Geologic Studies; Foundations
Solar Energy Utilization
Solid Wastes; Incineration; Landfill
Special Environments; Clean Rooms, Etc.
Structural Design; Special Structures
Surveying; Platting; Mapping; Flood Plain Studies
Sustainable Design
Swimming Pools
Storm Water Handling and Facilities
Specifications Writing
Toxicology
Testing and Inspection Services
Traffic and Transportation Engineering
Topographic Surveying and Mapping
Towers *(Self-Supporting and Guyed Systems)*
Tunnels and Subways
Traffic Studies
Transportation
Urban renewals; Community Development
Utilities *(Gas and Steam)*
Value Analysis; Life-Cycle Costing
Warehouse and Depots
Water Resources; Hydrology; Ground Water
Water Supply; Treatment and Distribution
Wind Tunnels; Research/Testing Facilities Design
Waste Water Treatment Facility
Water Well Rehabilitation; Water Well Work
Zoning; Land Use Studies

(If a firm has branch offices, complete for each specific branch office seeking work.)

1. ***Annual Request for Qualifications***

a. FIRM (OR BRANCH OFFICE) NAME:	Atwell, LLC
b. FIRM (OR BRANCH OFFICE) STREET:	4700 E. Southern Avenue
c. FIRM (OR BRANCH OFFICE) CITY:	Mesa
d. FIRM (OR BRANCH OFFICE) STATE:	Arizona
e. FIRM (OR BRANCH OFFICE) ZIP CODE:	85206

f. YEAR ESTABLISHED:	2009

(g1). OWNERSHIP - TYPE:	Limited Liability Company
(g2) OWNERSHIP - SMALL BUSINESS STATUS:	N/A

h. POINT OF CONTACT NAME AND TITLE:	Ted Northrop, PE Regional Vice President
i. POINT OF CONTACT TELEPHONE NUMBER:	(480) 218-8831
j. POINT OF CONTACT E-MAIL ADDRESS:	tnorthrop@atwell-group.com

k. NAME OF FIRM *(If block 1a is a branch office)*:	Atwell, LLC

2. EMPLOYEES BY DISCIPLINE

a. Discipline Title	b. Function: Primary (P) or Secondary (S)	c. No. of Employees - Firm	d. No. of Employees - Branch
Archeologist	S	1	
Biologist	S	12	
CADD Technician	P	18	3
Civil Engineer	P	58	14
Construction Manager	P	3	1
Construction Inspector	P	1	0
Control Systems Engineer	S	3	0
Cost Engineer/Estimator	S	12	4
Ecologist	P	16	1
Electrical Engineer	P	17	1
Environmental Engineer	S	24	7
Environmental Scientist	S	24	7
Geodetic Surveyor	S	1	0
Geographic Information Systems Specialist	P	2	0
Geological Engineer	S	15	4
Geologist	P	15	4
Hydrographic Surveyor	S	1	0
Hydraulic Engineer	S	1	0
Hydrologist	S	5	1
Landscape Architect	S	1	0
Mining Engineer	S	3	3
Petroleum Engineer	P	7	0
Project Manager	P	35	2
Sanitary Engineer	S	6	0
Structural Engineer	P	3	0
Technician/Analyst	S	8	0
Transportation Engineer	S	1	0

Water Resources Engineer	S	3	0
Total		296	52

3. PROFILE OF FIRM'S EXPERIENCE AND ANNUAL AVERAGE REVENUE FOR LAST YEAR

a. Approximate No. of Projects	b. Experience	c. Revenue Index Number *(see below)*
	Aerial Photography; Airborne Data and Imagery	2
	Air Pollution Control	1
	Airports; Terminals and Hangars; Freight Handling	3
	Area Master Planning	6
	Automation; Controls; Instrumentation	1
	Chemical Processing & Storage	2
	Commercial Building (low rise); Shopping Centers	6
	Community Facilities	1
	Communications Systems; TV; Microwave	1
	Construction Management	3
	Construction Surveying	5
	Controls and Electronics Engineer	1
	Corrosion Control; Cathodic Protection; Electrolysis	1
	Cost Estimating; Cost Engineering and Analysis	3
	Design & Planning Structured Parking Facilities	1
	Design-Build – Preparation of Requests for Proposals	6
	Digital Elevation and Terrain Model Development	1
	Digital Orthophotography	1
	Dining Halls; Clubs; Restaurants	1
	Disability/Special Needs	2
	Dredging Studies and Design	1
	Ecological & Archaeological Investigations	6
	Educational Facilities; Classrooms	1
	Electrical Studies and Design	1
	Energy Conservation; New Energy Sources	2
	Environmental Impact Studies, Assessments	6

	Forensic Engineering	1
	Garages; Vehicles Maintenance Facilities; Parking	1
	Geodetic Surveying; Ground and Airborne	1
	Highways; Streets; Airfield Paving; Parking Lots	5
	Historical Preservation	1
	Hospitals & Medical Facilities	3
	Hotels; Motels	1
	Housing (Residential, Multi-Family; Apartments)	7
	Hydraulics & Pneumatics	2
	Hydrographic Surveying	1
	Industrial Buildings; Manufacturing Plants	4
	Industrial Waste Treatment	1
	Infrastructure	6
	Irrigation; Drainage	5
	Land Surveying	7
	Landscape Architecture	2
	LEED Accredited A/E	1
	Libraries; Museums; Galleries	1
	Materials Handling Systems; Conveyors; Sorters	5
	Mining & Mineralogy	6
	Mold Investigation	1
	Office Buildings; Industrial Parks	5
	Outdoor Recreation	2
	Petroleum and Fuel (Storage and Distribution)	3
	Phase I Environmental	5
	Photogrammetry	1
	Pipelines (Cross-Country – Liquid & Gas)	6
	Plumbing & Piping Design	1
	Power Generation, Transmission, Distribution	5

	Public Safety Facilities	1
	Recreation Facilities (Parks, Marinas, Etc.)	1
	Rivers; Canals; Waterways; Flood Control	1
	Sewage Collection, Treatment and Disposal	5
	Soils & Geologic Studies; Foundations	4
	Solar Energy Utilization	1
	Solid Wastes; Incineration; Landfill	1

PROFESSIONAL SERVICES REVENUE INDEX NUMBER

1. Less than $100,000
2. $100,000 to less than $250,000
3. $250,000 to less than $500,000
4. $500,000 to less than $1 million
5. $1 million to less than $2 million
6. $2 million to less than $5 million
7. $5 million to less than $10 million
8. $10 million to less than $25 million
9. $25 million to less than $50 million
10. $50 million or greater

4. Resumes of Key Personnel Proposed for this Contract (*Complete one Section #4 for each key person.*)

a. NAME	b. ROLE IN THIS CONTRACT	c. YEARS EXPERIENCE	
		1. TOTAL	2. WITH CURRENT FIRM
Ed Balliet, RLS, CFedS	Survey Project Manager	29	1.5

d. LOCATION *(City and State)* Mesa, Arizona

e. EDUCATION *(DEGREE AND SPECIALIZATION)*	f. PROFESSIONAL TRAINING - REGISTRATIONS
	Registered Land Surveyor - Arizona #31587

g. OTHER PROFESSIONAL QUALIFICATIONS *(Organizations, Awards, etc.)*

Certified Federal Surveyor #1442

H. RELEVANT PROJECTS

	(1) TITLE AND LOCATION *(City and State)*	(2) YEAR COMPLETED	
		Professional Services	Construction (if applicable)
1.	Rancho Mercado - Surprise, Arizona	X	
	(3) BRIEF DESCRIPTION *(Brief scope, size, cost, etc.)* AND SPECIFIC ROLE	X Check if project performed with current firm	
	Currently conducting topographic mapping, ALTA surveys, and subdivision platting for this master planned community. Services also included providing legal descriptions and exhibits for right of way and easement aquisition.		
2.	Church Farms - Queen Creek, Arizona	X	
	Assisting in platting of this 2,310-lot Master Plan Community on 878 acres. Services included providing legal descriptions and exhibits for right of way and easement aquisition.		
3.	Camp Sombrero - Phoenix, Arizona	X	
	Currently conducting a construction survey for this leadership center.		
4.	Farrell Road - Maricopa, Arizona	X	
	Performing construction survey services for said roadway and streetscape.		
5.	Pinnacle Peak Drainage Structures - Scottsdale, Arizona	X	
	Conducting topo survey for inventory of drainage structures with Pinnacle Peak Flood Plain.		

4. Resumes of Key Personnel Proposed for this Contract (*Complete one Section #4 for each key person.*)

a. NAME	b. ROLE IN THIS CONTRACT	c. YEARS EXPERIENCE	
		1. TOTAL	2. WITH CURRENT FIRM
Richard Petrus, CEM	Senior Environmental Manager	38	6

d. LOCATION *(City and State)* Mesa, Arizona

e. EDUCATION *(DEGREE AND SPECIALIZATION)*	f. PROFESSIONAL TRAINING - REGISTRATIONS
Master of Arts, Geology - University of Missouri	Certified Environmental Manager - Nevada CEM-15636

g. OTHER PROFESSIONAL QUALIFICATIONS *(Organizations, Awards, etc.)*

H. RELEVANT PROJECTS

1.

(1) TITLE AND LOCATION *(City and State)*: West Sky Harbor Airport Biosparging Project - Phoenix, AZ

(2) YEAR COMPLETED: 2015

Professional Services	Construction (if applicable)
X	

(3) BRIEF DESCRIPTION *(Brief scope, size, cost, etc.)* AND SPECIFIC ROLE

[X] Check if project performed with current firm

Developed the monitoring requirements, action levels, and response actions. Responsible for all permitting tasks for this LUST remediation project. Project involved remediation of a 1.3 million gallon Jet A fuel release.

2.

(1) TITLE AND LOCATION *(City and State)*: ADOT Bylas UST Removal

(2) YEAR COMPLETED: 2015

Professional Services	Construction (if applicable)
X	X

(3) BRIEF DESCRIPTION *(Brief scope, size, cost, etc.)* AND SPECIFIC ROLE

[X] Check if project performed with current firm

Mr Petrus managed the removal of an orphan underground storage tank on ADOT right-of-way. Atwell removed the tanks and associated piping, collected soil samples to confirm there was no release and prepared the site closure report.

3.

(1) TITLE AND LOCATION *(City and State)*: ADOT 202 Loop Phase I Site Assessment

(2) YEAR COMPLETED: 2015

Professional Services	Construction (if applicable)
X	

(3) BRIEF DESCRIPTION *(Brief scope, size, cost, etc.)* AND SPECIFIC ROLE

[X] Check if project performed with current firm

Mr. Petrus managed the conduct to 13 Phase I Environmental Site Assessments for ADOT. The ESAs were along the 59th Avenue alignment. Properties included farmland, electric substations and gravel quarries. Atwell developed recommendations for the Recognized Environmental Concerns found during the conduct of the ESAs.

4.

(1) TITLE AND LOCATION *(City and State)*: ADEQ Willcox LUST Site Remediation

(2) YEAR COMPLETED

Professional Services	Construction (if applicable)
X	

(3) BRIEF DESCRIPTION *(Brief scope, size, cost, etc.)* AND SPECIFIC ROLE

[X] Check if project performed with current firm

Mr. Petrus is currently managing the Clayton Radiator site remediation for ADEQ's State Lead Unit. For this site tasks included groundwater well installation, groundwater sampling, installation of an air sparge and SVE system, and operation and maintenance of the AS/SVE systems. Atwell prepares annual site remedial progress reports to ADEQ. Contract will extend through 2016.

5.

(1) TITLE AND LOCATION *(City and State)*: Gila County Solid Waste Management Services

(2) YEAR COMPLETED

Professional Services	Construction (if applicable)
X	

(3) BRIEF DESCRIPTION *(Brief scope, size, cost, etc.)* AND SPECIFIC ROLE

[X] Check if project performed with current firm

Since 2010, Mr. Petrus has managed an on-call solid waste services contract with the County which includes groundwater and methane monitoring, greenhouse gas emission estimation, financial assurance estimates, SWPPP preparation and training, spill response, and response to any agency requests. Atwell staff have managed the design and construction of 26 acres of double lined expansions at two County landfills. Atwell staff managed the Type IV Landfill Expansion application for the Russell Gulch Landfill. The landfill will be increased by nearly 1,000,00 cubic yards of capacity. Contract work is anticipated to extend through 2016.

4. Resumes of Key Personnel Proposed for this Contract (*Complete one Section #4 for each key person.*)

a. NAME	b. ROLE IN THIS CONTRACT	c. YEARS EXPERIENCE	
		1. TOTAL	2. WITH CURRENT FIRM
Darrell Smith, PE	Engineer	30	2

d. LOCATION *(City and State)* Mesa, Arizona

e. EDUCATION *(DEGREE AND SPECIALIZATION)*	f. PROFESSIONAL TRAINING - REGISTRATIONS
Bachelor of Science, Civil Engineering	Professional Engineer - State of Arizona #20952

g. OTHER PROFESSIONAL QUALIFICATIONS *(Organizations, Awards, etc.)*

American Society of Civil Engineers, East Valley Partnership

H. RELEVANT PROJECTS

	(1) TITLE AND LOCATION *(City and State)*	(2) YEAR COMPLETED	
		Professional Services	Construction (if applicable)
1.	CVS - Douglas, AZ	2015 X	
	(3) BRIEF DESCRIPTION *(Brief scope, size, cost, etc.)* AND SPECIFIC ROLE	[X] Check if project performed with current firm	
	Acted as the Project Manager, performing onsite grading, drainage, paving, and ADOT driveway for this project.		
2.	(1) TITLE AND LOCATION *(City and State)*	(2) YEAR COMPLETED 2015	
	Mountain Bridge - Mesa, AZ	Professional Services X	Construction (if applicable)
	(3) BRIEF DESCRIPTION *(Brief scope, size, cost, etc.)* AND SPECIFIC ROLE	[X] Check if project performed with current firm	
	Acted as the Project Manager for the 700-acre, 1,400 lot master planned community. Darrell worked with the Flood Control District of Maricopa County and City of Mesa throughout the project.		
3.	(1) TITLE AND LOCATION *(City and State)*	(2) YEAR COMPLETED 2015	
	Kneader's Restaurant - Glendale, AZ	Professional Services X	Construction (if applicable)
	(3) BRIEF DESCRIPTION *(Brief scope, size, cost, etc.)* AND SPECIFIC ROLE	[X] Check if project performed with current firm	
	As the Project Manager, Mr. Smith oversaw the grading, drainage, water and sewer design for this project.		
4.	(1) TITLE AND LOCATION *(City and State)*	(2) YEAR COMPLETED 2014	
	Eastmark - Mesa, AZ	Professional Services X	Construction (if applicable)
	(3) BRIEF DESCRIPTION *(Brief scope, size, cost, etc.)* AND SPECIFIC ROLE	[ ] Check if project performed with current firm	
	Darrell acted as the Project Manager for this 3200-acre master planned community. Scope included preparation of master wastewater, water, raw water and drainage infrastructure plans.		
5.	(1) TITLE AND LOCATION *(City and State)*	(2) YEAR COMPLETED	
		Professional Services	Construction (if applicable)
	(3) BRIEF DESCRIPTION *(Brief scope, size, cost, etc.)* AND SPECIFIC ROLE	[ ] Check if project performed with current firm	

4. Resumes of Key Personnel Proposed for this Contract (*Complete one Section #4 for each key person.*)

a. NAME	b. ROLE IN THIS CONTRACT	c. YEARS EXPERIENCE	
James Spring, PLS	Survey	1. TOTAL 35	2. WITH CURRENT FIRM 2

d. LOCATION *(City and State)* Mesa, Arizona

e. EDUCATION *(DEGREE AND SPECIALIZATION)*	f. PROFESSIONAL TRAINING - REGISTRATIONS
	Professional Land Surveyor - Arizona #22282

g. OTHER PROFESSIONAL QUALIFICATIONS *(Organizations, Awards, etc.)*

National Society of Professional Surveyors

H. RELEVANT PROJECTS

	(1) TITLE AND LOCATION *(City and State)*	(2) YEAR COMPLETED	
1.	SR 85 Landfill - City of Phoenix	Professional Services: X	Construction (if applicable):
	(3) BRIEF DESCRIPTION *(Brief scope, size, cost, etc.)* AND SPECIFIC ROLE	[X] Check if project performed with current firm	
	Provided on-call survey services for the City of Phoenix SR 85 landfill site for design along with construction quality assurance and quality control.		
2.	(1) TITLE AND LOCATION *(City and State)*	(2) YEAR COMPLETED 2015	
	Tempe Town Lake Lower Dam Review - Tempe, Arizona	Professional Services: X	Construction (if applicable):
	(3) BRIEF DESCRIPTION *(Brief scope, size, cost, etc.)* AND SPECIFIC ROLE	[ ] Check if project performed with current firm	
	Provided professional survey services in assisting the city in yearly structural review of foundation cracks.		
3.	(1) TITLE AND LOCATION *(City and State)*	(2) YEAR COMPLETED	
	1st Avenue - Mesa, Arizona	Professional Services: X	Construction (if applicable):
	(3) BRIEF DESCRIPTION *(Brief scope, size, cost, etc.)* AND SPECIFIC ROLE	[X] Check if project performed with current firm	
	Currently providing professional services for Jacobs design team for 1st avenue roadway design in the City of Mesa.		
4.	(1) TITLE AND LOCATION *(City and State)*	(2) YEAR COMPLETED	
	Optima Kierkland Condo Complex - City of Phoenix	Professional Services: X	Construction (if applicable):
	(3) BRIEF DESCRIPTION *(Brief scope, size, cost, etc.)* AND SPECIFIC ROLE	[X] Check if project performed with current firm	
	Currently providing survey services in the development of a five unit highrise condominium complex.		
5.	(1) TITLE AND LOCATION *(City and State)*	(2) YEAR COMPLETED	
		Professional Services:	Construction (if applicable):
	(3) BRIEF DESCRIPTION *(Brief scope, size, cost, etc.)* AND SPECIFIC ROLE	[ ] Check if project performed with current firm	

5. EXAMPLE PROJECTS WHICH BEST ILLUSTRATE PROPOSED TEAM'S QUALIFICATIONS FOR THIS CONTRACT

(Present no more than five (5) projects. Complete one Section 5 for each project.)

a. TITLE AND LOCATION *(City and State)*	b. YEAR COMPLETED ongoing	
Gila County Solid Waste Management Services - Globe, Arizona	PROFESSIONAL SERVICES X	CONSTRUCTION *(If applicable)*

23. PROJECT OWNER'S INFORMATION

c .PROJECT OWNER	d .ORIGINAL BUDGET/NTE AMOUNT OF PROJECT	e. TOTAL COST OF PROJECT
Gila County	on going since 2010	$250,000

f. BRIEF DESCRIPTION OF PROJECT AND RELEVANCE TO THIS CONTRACT (include scope, size, and length of project)

Since 2010, Mr. Petrus has managed an on-call solid waste services contract with the County which includes groundwater and methane monitoring, greenhouse gas emission estimation, financial assurance estimates, SWPPP preparation and training, spill response, and response to any agency requests. Atwell staff have managed the design and construction of 26 acres of double lined expansions at two County landfills. Atwell staff managed the Type IV Landfill Expansion application for the Russell Gulch Landfill. The landfill will be increased by nearly 1,000,00 cubic yards of capacity. Contract work is anticipated to extend through 2016.

5. EXAMPLE PROJECTS WHICH BEST ILLUSTRATE PROPOSED TEAM'S QUALIFICATIONS FOR THIS CONTRACT

(Present no more than five (5) projects. Complete one Section 5 for each project.)

a. TITLE AND LOCATION *(City and State)*	b. YEAR COMPLETED 2013	
	PROFESSIONAL SERVICES	CONSTRUCTION *(If applicable)*
South Loop 202 Widening - Phoenix, Arizona	X	

23. PROJECT OWNER'S INFORMATION

c .PROJECT OWNER	d .ORIGINAL BUDGET/NTE AMOUNT OF PROJECT	e. TOTAL COST OF PROJECT
ADOT & Pulice Construction	Total Budget $75 million	Survey Budget $780,000

f. BRIEF DESCRIPTION OF PROJECT AND RELEVANCE TO THIS CONTRACT (include scope, size, and length of project)

The design-build team provided construction survey and layout for two new HOV flyover bridges at the 101/202 intersection and the I-10/202 intersection. The project also required the layout of 11 miles of new HOV lanes along the 202 from Gilbert Road to the I-10 Interchange.

5. EXAMPLE PROJECTS WHICH BEST ILLUSTRATE PROPOSED TEAM'S QUALIFICATIONS FOR THIS CONTRACT

(Present no more than five (5) projects. Complete one Section 5 for each project.)

a. TITLE AND LOCATION *(City and State)*	b. YEAR COMPLETED 2014	
	PROFESSIONAL SERVICES	CONSTRUCTION *(If applicable)*
SR 303 - Cactus Avenue to Clear View Drive - Glendale, Arizona	X	

23. PROJECT OWNER'S INFORMATION

c .PROJECT OWNER	d .ORIGINAL BUDGET/NTE AMOUNT OF PROJECT	e. TOTAL COST OF PROJECT
ADOT & Pulice Construction	Total Budget $125 million	Survey Budget $1.1 million

f. BRIEF DESCRIPTION OF PROJECT AND RELEVANCE TO THIS CONTRACT (include scope, size, and length of project)

This project was the first CMAR project in which ADOT and the Federal Highway Administration worked together. The team supervised the construction staking for the 7.5 mile project, including three new overpasses and interchanges. Additional services included review of the design plans before construction and assisting Pulice Construction in developing CADD drawings used for shop drawings or data for field layout.

6. ADDITIONAL INFORMATION

a. PROVIDE ANY ADDITIONAL INFORMATION YOU FEEL MAY BE NECESSARY TO DESCRIBE YOUR FIRMS QUALIFICATIONS. *(ATTACH ADDITIONAL SHEETS AS NEEDED.)*

7. ANNUAL AVERAGE PROFESSIONAL SERVICES REVENUES OF FIRM FOR LAST 3 YEARS

a.	Percentage of Total Work Attributable to State, Federal and Municipal Government Work:	15%
b.	Percentage of Total Work Attributable to Non-Government Work:	85%

8. AUTHORIZED REPRESENTATIVE. The foregoing is a statement of facts.

Signature: _____ Date: December 21, 2015

Name: Ted Northrop, PE Title: Regional Vice President

ARF-4228 **Regular Agenda Item 3. B.**

Regular BOS Meeting

Meeting Date:	03/21/2017		
Submitted For:	Steve Sanders, Director		
Submitted By:	Betty Hurst, Contracts Administrator		
Department:	Finance		
Fiscal Year:	2016-2017	Budgeted?:	Yes
Contract Dates Begin & End:	60 from Notice to Proceed	Grant?:	No
Matching Requirement?:	No	Fund?:	Renewal

Information

Request/Subject

Approval to use State Contract No. ADSPO12-013788 with SD Crane Builders, Inc. for the renovation of the first floor of the Globe Courthouse building.

Background Information

In 2013, the Board of Supervisors asked staff to identify space options in an attempt to alleviate overcrowding. Various alternatives for acquiring additional office space have been explored. In recent years the second floor of the Courthouse was remodeled and the School Superintendent's Office moved from the first floor to the second floor. This gave the County Attorney room to move the staff from the Michaelson building to the Courthouse so all of the staff was in the same area. Planning had been ongoing but was on hold until the Copper Building could be completed. In January 2017, all of the remaining County Attorney staff was removed from the Michaelson building in Globe and temporarily placed in an area of the first floor at the Courthouse. It is not an ideal working space so the quicker the remodel is completed, the better it will be for the public and the employees.

The Justice Court has also been planning to rearrange its office space and accommodate safer public access and more efficient work areas for staff. Working on remodeling both offices at the same time will reduce contractor mobilization costs and make the HVAC system renovations complete at the same time. Climate control has been an issue for years with small office remodels affecting, but not addressing the entire first floor HVAC system.

Equally important to the above issues, this tenant improvement addresses

the necessary security for the County Attorney, Justice Court offices and improves the south elevator security for the Sheriff Detention staff and inmates during transport.

Evaluation

Designing the space for the Globe Courthouse first floor to accommodate the County Attorney from the Michaelson building and remodeling the Justice Court to enhance the flow of work and public traffic in its offices has been in progress since 2016. The design work was planned with the assistance of an architect and the final drawings were accepted by the County Attorney and Justice Court. The Public Works Facilities staff sought a proposal from SD Crane Builders because of the previous projects' successes. The attached proposal was submitted by SD Crane Builders and confirmed by the Gordian Group in the amount of $369,880.20 for the work that will be required on the project. Public Works Facilities will add an additional ten percent (10%) to the cost for contingency only to be expensed with prior authorization of the County Project Manager. With job order contracting contingency it has only been used for the unknowns on the previous projects, not what was missed by the contractor.

Conclusion

The Public Works Facilities team has concluded that the most viable, direct route of accomplishing the County's objectives in completing a fully functional Courthouse building can be obtained by utilizing a cooperative contract with the State of Arizona Procurement Office with SD Crane Builders, Inc., a General Contractor, for the construction of interior improvements and all associated facets of construction.

Recommendation

The Finance Division Director and the Public Works Division Director recommend that the Board of Supervisors approve the use of the State of Arizona Procurement Office Contract No. ADSPO12-013788 with SD Crane Builders, Inc. for the construction of interior improvements, exterior improvements and all associated facets of remodel on the Courthouse building.

Suggested Motion

Information/Discussion/Action to approve the use of the State of Arizona Procurement Office Contract No. ADSPO12-013788 with SD Crane Builders, Inc. for the construction of interior improvements, exterior improvements and all associated facets of remodel on the Globe Courthouse building in the amount of $369,880.20 with estimated completion 60 days from the date of the "Notice to Proceed" issued by the County to SD Crane Builders, Inc. **(James Menlove/Steve Sanders)**

Attachments

17-GilaCounty-0002.00 PriceProposalDetail

SummaryofCostsforGeneralEZIQCProjects 17-GilaCounty-0002.00

Drawings A1 - A7 2-8-2017

ADSPO12-013788 Change Order Summary - 1.31.2017

Statewide JOC Contract

www.eziqc.com

Job Order Contract

Price Proposal Summary - CSI

Date:	March 08, 2017
Contract Number:	ADSPO11-013788-ez
Job Order Number:	17-GilaCounty-0002.00
Job Order Title:	Globe Court House remodel
Contractor:	Arizona - SD Crane Builders, Inc.
Proposal Value:	$336,254.73
Proposal Name:	Globe Court House remodel
Detailed Scope:	Per plans and specifications provided by Gila County

01 - General Requirements:	**$51,226.60**
05 - Metals:	**$218.03**
06 - Wood, Plastic, and Composites:	**$29,952.96**
08 - Openings:	**$36,201.06**
09 - Finishes:	**$116,953.46**
13 - Special Construction:	**$1,583.23**
21 - Fire Suppression:	**$6,982.00**
22 - Plumbing:	**$15,333.67**
23 - Heating, Ventilating, And Air-Conditioning (HVAC):	**$34,382.07**
26 - Electrical:	**$43,421.65**
Proposal Total	**$336,254.73**

This proposal total represents the correct total for the proposal. Any discrepancy between line totals, sub-totals and the proposal total is due to rounding of the line totals and sub-totals.

The Percent of NPP on this Proposal: 0.00%

Job Order Contract

Price Proposal Detail - CSI

Date: March 08, 2017

Contract Number: ADSPO11-013788-ez
Job Order Number: 17-GilaCounty-0002.00
Job Order Title: Globe Court House remodel
Contractor: Arizona - SD Crane Builders, Inc.
Proposal Value: $336,254.73
Proposal Name: Globe Court House remodel
Adjustment Factor(s) Used: 1.0500-Option 4 - Non Pre-Priced, 1.1760-Option 4 - Owner-Funded Projects Normal Working Hours

Rec#	CSI Number	Mod.	UOM	Description	Line Total
01 - General Requirements					
1	01 22 16 00 0002		EA	Reimbursable FeesNote: Reimbursable Fees will be paid to the contractor for the actual cost of all permits, without mark-up, for which a receipt or bill is received. The Adjustment Factor applied to Reimbursable Fees will be 1.00. The labor cost involved in obtaining all permits is in the Adjustment Factor. The base cost of the Reimbursable Fee is $1.00. The quantity used will adjust the base cost to the actual Reimbursable Fee (e.g. quantity of 125 = $125.00 Reimbursable Fee). If there are multiple Reimbursable Fees, each one shall be listed separately with a comment in the "note" block to identify the Reimbursable Fees (e.g. sidewalk closure, road cut, various permits, extended warrantee, expedited shipping costs, etc.). A copy of each receipt shall be included with the Proposal.	$4,793.27
			Installation	Quantity 4,565.02 x Unit Price $1.00 x Factor 1.0500 = Total $4,793.27	
		User Note:	Bond		
2	01 22 16 00 0002		EA	Reimbursable FeesNote: Reimbursable Fees will be paid to the contractor for the actual cost of all permits, without mark-up, for which a receipt or bill is received. The Adjustment Factor applied to Reimbursable Fees will be 1.00. The labor cost involved in obtaining all permits is in the Adjustment Factor. The base cost of the Reimbursable Fee is $1.00. The quantity used will adjust the base cost to the actual Reimbursable Fee (e.g. quantity of 125 = $125.00 Reimbursable Fee). If there are multiple Reimbursable Fees, each one shall be listed separately with a comment in the "note" block to identify the Reimbursable Fees (e.g. sidewalk closure, road cut, various permits, extended warrantee, expedited shipping costs, etc.). A copy of each receipt shall be included with the Proposal.	$1,011.51
			Installation	Quantity 963.34 x Unit Price $1.00 x Factor 1.0500 = Total $1,011.51	
		User Note:	Builders Risk		
3	01 22 16 00 0002		EA	Reimbursable FeesNote: Reimbursable Fees will be paid to the contractor for the actual cost of all permits, without mark-up, for which a receipt or bill is received. The Adjustment Factor applied to Reimbursable Fees will be 1.00. The labor cost involved in obtaining all permits is in the Adjustment Factor. The base cost of the Reimbursable Fee is $1.00. The quantity used will adjust the base cost to the actual Reimbursable Fee (e.g. quantity of 125 = $125.00 Reimbursable Fee). If there are multiple Reimbursable Fees, each one shall be listed separately with a comment in the "note" block to identify the Reimbursable Fees (e.g. sidewalk closure, road cut, various permits, extended warrantee, expedited shipping costs, etc.). A copy of each receipt shall be included with the Proposal.	$5,250.00
			Installation	Quantity 5,000.00 x Unit Price $1.00 x Factor 1.0500 = Total $5,250.00	
		User Note:	Fire Alarm allowance		

Job Order Number:
Job Order Title:

Rec#	CSI Number	Mod.	UOM	Description	Line Total
01 - General Requirements					
4	01 22 16 00 0002		EA	Reimbursable FeesNote: Reimbursable Fees will be paid to the contractor for the actual cost of all permits, without mark-up, for which a receipt or bill is received. The Adjustment Factor applied to Reimbursable Fees will be 1.00. The labor cost involved in obtaining all permits is in the Adjustment Factor. The base cost of the Reimbursable Fee is $1.00. The quantity used will adjust the base cost to the actual Reimbursable Fee (e.g. quantity of 125 = $125.00 Reimbursable Fee). If there are multiple Reimbursable Fees, each one shall be listed separately with a comment in the "note" block to identify the Reimbursable Fees (e.g. sidewalk closure, road cut, various permits, extended warrantee, expedited shipping costs, etc.). A copy of each receipt shall be included with the Proposal.	$18,922.93
			Installation	Quantity 18,021.84 x Unit Price $1.00 x Factor 1.0500 = Total $18,922.93	
		User Note:	Tax		
5	01 22 16 00 0002		EA	Reimbursable FeesNote: Reimbursable Fees will be paid to the contractor for the actual cost of all permits, without mark-up, for which a receipt or bill is received. The Adjustment Factor applied to Reimbursable Fees will be 1.00. The labor cost involved in obtaining all permits is in the Adjustment Factor. The base cost of the Reimbursable Fee is $1.00. The quantity used will adjust the base cost to the actual Reimbursable Fee (e.g. quantity of 125 = $125.00 Reimbursable Fee). If there are multiple Reimbursable Fees, each one shall be listed separately with a comment in the "note" block to identify the Reimbursable Fees (e.g. sidewalk closure, road cut, various permits, extended warrantee, expedited shipping costs, etc.). A copy of each receipt shall be included with the Proposal.	$1,837.50
			Installation	Quantity 1,750.00 x Unit Price $1.00 x Factor 1.0500 = Total $1,837.50	
		User Note:	Fire Sprinkler permit and design.		
6	01 22 16 00 0002		EA	Reimbursable FeesNote: Reimbursable Fees will be paid to the contractor for the actual cost of all permits, without mark-up, for which a receipt or bill is received. The Adjustment Factor applied to Reimbursable Fees will be 1.00. The labor cost involved in obtaining all permits is in the Adjustment Factor. The base cost of the Reimbursable Fee is $1.00. The quantity used will adjust the base cost to the actual Reimbursable Fee (e.g. quantity of 125 = $125.00 Reimbursable Fee). If there are multiple Reimbursable Fees, each one shall be listed separately with a comment in the "note" block to identify the Reimbursable Fees (e.g. sidewalk closure, road cut, various permits, extended warrantee, expedited shipping costs, etc.). A copy of each receipt shall be included with the Proposal.	$10,500.00
			Installation	Quantity 10,000.00 x Unit Price $1.00 x Factor 1.0500 = Total $10,500.00	
		User Note:	Allowance for the use of Stanley Security to install all security access as called per plans. any unused allowance will be returned to the County.		
7	01 22 20 00 0010		HR	ElectricianNote: Tasks in the CTC include appropriate costs to cover labor. These tasks will be requested specifically by the owner for miscellaneous work not covered in the CTC.	$1,499.26
			Installation	Quantity 32.00 x Unit Price $39.84 x Factor 1.1760 = Total $1,499.26	
		User Note:	two days of investigative work per the conversation during the job walk about the existing electrical system.		
8	01 22 20 00 0010	Mod	HR	For Foreman, Add	$37.44
			Installation	Quantity 16.00 x Unit Price $1.99 x Factor 1.1760 = Total $37.44	
		User Note:	two days of investigative work per the conversation during the job walk about the existing electrical system.		

Job Order Number:
Job Order Title:

Rec#	CSI Number	Mod.	UOM	Description	Line Total
01 - General Requirements					
9	01 22 20 00 0029		HR	Sheet Metal WorkerNote: Tasks in the CTC include appropriate costs to cover labor. These tasks will be requested specifically by the owner for miscellaneous work not covered in the CTC.	$3,570.52
			Installation	Quantity 64.00 x Unit Price $47.44 x Factor 1.1760 = Total $3,570.52	
		User Note:		rework of the 2 units to go from the floor to the limited above ceiling space. Requesting Owner approval for this line item due to the unique scope of this work.	
10	01 22 20 00 0029	Mod	HR	For Foreman, Add	$89.19
			Installation	Quantity 32.00 x Unit Price $2.37 x Factor 1.1760 = Total $89.19	
		User Note:		rework of the 2 units to go from the floor to the limited above ceiling space. Requesting Owner approval for this line item due to the unique scope of this work.	
11	01 56 16 00 0014		SF	5/8" Gypsum Board On One Side, Temporary Stud WallNote: Wood studs at 16" OC, taped and finished, one coat of flat paint. Remove after use.	$3,714.98
			Installation	Quantity 1,300.00 x Unit Price $2.43 x Factor 1.1760 = Total $3,714.98	
		User Note:		Build temporary construction wall to keep construction separate from daily building use.	
Subtotal for 01 - General Requirements:					**$51,226.60**
05 - Metals					
12	05 12 23 00 0401		LF	2" x 2" x 1/4" Angle Iron	$218.03
			Installation	Quantity 30.00 x Unit Price $6.18 x Factor 1.1760 = Total $218.03	
		User Note:		support to hang the unit is the existing ceiling space.	
Subtotal for 05 - Metals:					**$218.03**
06 - Wood, Plastic, and Composites					
13	06 11 13 00 0007		LF	Two 2"x6" (5cm x 15cm) Built-up Post	$114.03
			Installation	Quantity 48.00 x Unit Price $2.02 x Factor 1.1760 = Total $114.02	
		User Note:		post at the end of the low walls framing out to the existing deck.	
14	06 11 16 00 0057		SF	2"x4" (5cm x 10cm) Wall Framing At 16" On Center	$305.88
			Installation	Quantity 306.00 x Unit Price $0.85 x Factor 1.1760 = Total $305.88	
		User Note:		Low wall framing	
15	06 11 16 00 0057		SF	2"x4" (5cm x 10cm) Wall Framing At 16" On Center	$5,108.59
			Installation	Quantity 3,732.75 x Unit Price $0.85 x Factor 1.1760 = Total $3,731.26	
			Demolition	3,660.00 x $0.32 x 1.1760 = $1,377.33	
		User Note:		Remove existing walls and frame new walls per plans.	
16	06 11 16 00 0058		SF	2"x6" (5cm x 15cm) Wall Framing At 16" On Center	$3,609.85
			Installation	Quantity 2,558.00 x Unit Price $1.20 x Factor 1.1760 = Total $3,609.85	
		User Note:		new framing. sound walls figured to deck.	

Job Order Number:
Job Order Title:

Rec#	CSI Number	Mod.	UOM	Description	Line Total
06 - Wood, Plastic, and Composites					
17	06 16 33 00 0011		SF	1/2" (12mm) Interior BC Plywood Wall SheathingNote: Applied To Wall Studs	$142.30
			Installation	Quantity 100.00 x Unit Price $1.21 x Factor 1.1760 = Total $142.30	
		User Note:	backing for millwork		
18	06 41 13 00 0004		EA	Up To 15" Width, 34-1/2" High x 24" Deep Base Cabinet,Note: Prefinished with solid hardwood face frames, hardwood door frames and drawer fronts. Hardwood veneer on raised door panels. Excludes top.	$804.56
			Installation	Quantity 3.00 x Unit Price $228.05 x Factor 1.1760 = Total $804.56	
		User Note:	City Attorney Breakroom		
19	06 41 13 00 0004	Mod	EA	For ADA Cabinet Units (Including All ADA Hardware), Add	$138.16
			Installation	Quantity 3.00 x Unit Price $39.16 x Factor 1.1760 = Total $138.16	
		User Note:	City Attorney Breakroom		
20	06 41 13 00 0004	Mod	EA	For 3 Drawer Unit, Add	$184.21
			Installation	Quantity 2.00 x Unit Price $78.32 x Factor 1.1760 = Total $184.21	
		User Note:	City Attorney Breakroom		
21	06 41 13 00 0004		EA	Up To 15" Width, 34-1/2" High x 24" Deep Base Cabinet,Note: Prefinished with solid hardwood face frames, hardwood door frames and drawer fronts. Hardwood veneer on raised door panels. Excludes top.	$268.19
			Installation	Quantity 1.00 x Unit Price $228.05 x Factor 1.1760 = Total $268.19	
		User Note:	JP Breakroom		
22	06 41 13 00 0004	Mod	EA	For ADA Cabinet Units (Including All ADA Hardware), Add	$46.05
			Installation	Quantity 1.00 x Unit Price $39.16 x Factor 1.1760 = Total $46.05	
		User Note:	JP Breakroom		
23	06 41 13 00 0004		EA	Up To 15" Width, 34-1/2" High x 24" Deep Base Cabinet,Note: Prefinished with solid hardwood face frames, hardwood door frames and drawer fronts. Hardwood veneer on raised door panels. Excludes top.	$804.56
			Installation	Quantity 3.00 x Unit Price $228.05 x Factor 1.1760 = Total $804.56	
		User Note:	City Attorney Reception		
24	06 41 13 00 0004	Mod	EA	For ADA Cabinet Units (Including All ADA Hardware), Add	$138.16
			Installation	Quantity 3.00 x Unit Price $39.16 x Factor 1.1760 = Total $138.16	
		User Note:	City Attorney Reception		
25	06 41 13 00 0004	Mod	EA	For 3 Drawer Unit, Add	$92.10
			Installation	Quantity 1.00 x Unit Price $78.32 x Factor 1.1760 = Total $92.10	
		User Note:	City Attorney Reception		
26	06 41 13 00 0005		EA	>15"-18" Width, 34-1/2" High x 24" Deep Base Cabinet,Note: Prefinished with solid hardwood face frames, hardwood door frames and drawer fronts. Hardwood veneer on raised door panels. Excludes top.	$877.94
			Installation	Quantity 3.00 x Unit Price $248.85 x Factor 1.1760 = Total $877.94	
		User Note:	City Attorney Copy		

Job Order Number:
Job Order Title:

Rec#	CSI Number	Mod.	UOM	Description	Line Total
06 - Wood, Plastic, and Composites					
27	06 41 13 00 0005	Mod	EA	For ADA Cabinet Units (Including All ADA Hardware), Add	$147.68
			Installation	Quantity 3.00 x Unit Price $41.86 x Factor 1.1760 = Total $147.68	
			User Note:	City Attorney Copy	
28	06 41 13 00 0005	Mod	EA	For 3 Drawer Unit, Add	$98.45
			Installation	Quantity 1.00 x Unit Price $83.72 x Factor 1.1760 = Total $98.45	
			User Note:	City Attorney Copy	
29	06 41 13 00 0005		EA	>15"-18" Width, 34-1/2" High x 24" Deep Base Cabinet,Note: Prefinished with solid hardwood face frames, hardwood door frames and drawer fronts. Hardwood veneer on raised door panels. Excludes top.	$292.65
			Installation	Quantity 1.00 x Unit Price $248.85 x Factor 1.1760 = Total $292.65	
			User Note:	City Attorney Reception	
30	06 41 13 00 0005	Mod	EA	For ADA Cabinet Units (Including All ADA Hardware), Add	$49.23
			Installation	Quantity 1.00 x Unit Price $41.86 x Factor 1.1760 = Total $49.23	
			User Note:	City Attorney Reception	
31	06 41 13 00 0005	Mod	EA	For 3 Drawer Unit, Add	$98.45
			Installation	Quantity 1.00 x Unit Price $83.72 x Factor 1.1760 = Total $98.45	
			User Note:	City Attorney Reception	
32	06 41 13 00 0005		EA	>15"-18" Width, 34-1/2" High x 24" Deep Base Cabinet,Note: Prefinished with solid hardwood face frames, hardwood door frames and drawer fronts. Hardwood veneer on raised door panels. Excludes top.	$585.30
			Installation	Quantity 2.00 x Unit Price $248.85 x Factor 1.1760 = Total $585.30	
			User Note:	JP Reception	
33	06 41 13 00 0005	Mod	EA	For ADA Cabinet Units (Including All ADA Hardware), Add	$49.23
			Installation	Quantity 1.00 x Unit Price $41.86 x Factor 1.1760 = Total $49.23	
			User Note:	JP Reception	
34	06 41 13 00 0005		EA	>15"-18" Width, 34-1/2" High x 24" Deep Base Cabinet,Note: Prefinished with solid hardwood face frames, hardwood door frames and drawer fronts. Hardwood veneer on raised door panels. Excludes top.	$585.30
			Installation	Quantity 2.00 x Unit Price $248.85 x Factor 1.1760 = Total $585.30	
			User Note:	JP Breakroom	
35	06 41 13 00 0005	Mod	EA	For ADA Cabinet Units (Including All ADA Hardware), Add	$98.45
			Installation	Quantity 2.00 x Unit Price $41.86 x Factor 1.1760 = Total $98.45	
			User Note:	JP Breakroom	
36	06 41 13 00 0005	Mod	EA	For 3 Drawer Unit, Add	$196.91
			Installation	Quantity 2.00 x Unit Price $83.72 x Factor 1.1760 = Total $196.91	
			User Note:	JP Breakroom	

Job Order Number:
Job Order Title:

Rec#	CSI Number	Mod.	UOM	Description	Line Total
06 - Wood, Plastic, and Composites					
37	06 41 13 00 0005		EA	>15"-18" Width, 34-1/2" High x 24" Deep Base Cabinet,Note: Prefinished with solid hardwood face frames, hardwood door frames and drawer fronts. Hardwood veneer on raised door panels. Excludes top.	$4,097.07
			Installation	Quantity 14.00 x Unit Price $248.85 x Factor 1.1760 = Total $4,097.07	
		User Note:	City Attorney Copy Scan File		
38	06 41 13 00 0005	Mod	EA	For ADA Cabinet Units (Including All ADA Hardware), Add	$689.18
			Installation	Quantity 14.00 x Unit Price $41.86 x Factor 1.1760 = Total $689.18	
		User Note:	City Attorney Copy Scan File		
39	06 41 13 00 0005	Mod	EA	For 3 Drawer Unit, Add	$787.64
			Installation	Quantity 8.00 x Unit Price $83.72 x Factor 1.1760 = Total $787.64	
		User Note:	City Attorney Copy Scan File		
40	06 41 13 00 0007		EA	>21"-24" Width, 34-1/2" High x 24" Deep Base Cabinet,Note: Prefinished with solid hardwood face frames, hardwood door frames and drawer fronts. Hardwood veneer on raised door panels. Excludes top.	$711.81
			Installation	Quantity 2.00 x Unit Price $302.64 x Factor 1.1760 = Total $711.81	
		User Note:	JP Breakroom		
41	06 41 13 00 0007	Mod	EA	For ADA Cabinet Units (Including All ADA Hardware), Add	$117.62
			Installation	Quantity 2.00 x Unit Price $50.01 x Factor 1.1760 = Total $117.62	
42	06 41 13 00 0007		EA	>21"-24" Width, 34-1/2" High x 24" Deep Base Cabinet,Note: Prefinished with solid hardwood face frames, hardwood door frames and drawer fronts. Hardwood veneer on raised door panels. Excludes top.	$355.90
			Installation	Quantity 1.00 x Unit Price $302.64 x Factor 1.1760 = Total $355.90	
		User Note:	City Attorney Breakroom		
43	06 41 13 00 0007	Mod	EA	For ADA Cabinet Units (Including All ADA Hardware), Add	$58.81
			Installation	Quantity 1.00 x Unit Price $50.01 x Factor 1.1760 = Total $58.81	
		User Note:	City Attorney Breakroom		
44	06 41 13 00 0023		EA	>33"-36" Wide, 34-1/2" High x 24" Deep 2-Drawer/2-Door CabinetNote: Prefinished with solid hardwood face frames, hardwood door frames and drawer fronts. Hardwood veneer on raised door panels. Excludes top.	$477.27
			Installation	Quantity 1.00 x Unit Price $405.84 x Factor 1.1760 = Total $477.27	
		User Note:	City Attorney Breakroom		
45	06 41 13 00 0023	Mod	EA	For ADA Cabinet Units (Including All ADA Hardware), Add	$79.40
			Installation	Quantity 1.00 x Unit Price $67.52 x Factor 1.1760 = Total $79.40	
		User Note:	City Attorney Breakroom		
46	06 41 13 00 0023		EA	>33"-36" Wide, 34-1/2" High x 24" Deep 2-Drawer/2-Door CabinetNote: Prefinished with solid hardwood face frames, hardwood door frames and drawer fronts. Hardwood veneer on raised door panels. Excludes top.	$954.54
			Installation	Quantity 2.00 x Unit Price $405.84 x Factor 1.1760 = Total $954.54	
		User Note:	JP Breakroom		

Job Order Number:
Job Order Title:

Rec#	CSI Number	Mod.	UOM	Description	Line Total
06 - Wood, Plastic, and Composites					
47	06 41 13 00 0023	Mod	EA	For ADA Cabinet Units (Including All ADA Hardware), Add	$158.81
			Installation	Quantity 2.00 x Unit Price $67.52 x Factor 1.1760 = Total $158.81	
			User Note:	JP Breakroom	
48	06 41 13 00 0023	Mod	EA	For Sink Base With Sink Front (No Drawer), Deduct	-$59.55
			Installation	Quantity 1.00 x Unit Price $-50.64 x Factor 1.1760 = Total $-59.55	
			User Note:	JP Breakroom	
49	06 41 13 00 0058		EA	12"-15" Wide, 30" High x 13" Deep Single Door Wall CabinetNote: Prefinished with solid hardwood face frames, hardwood door frames. Hardwood veneer on raised door panels.	$199.09
			Installation	Quantity 1.00 x Unit Price $169.29 x Factor 1.1760 = Total $199.09	
			User Note:	City Attorney Breakroom	
50	06 41 13 00 0059		EA	15"-18" Wide, 30" High x 13" Deep Single Door Wall CabinetNote: Prefinished with solid hardwood face frames, hardwood door frames. Hardwood veneer on raised door panels.	$434.11
			Installation	Quantity 2.00 x Unit Price $184.57 x Factor 1.1760 = Total $434.11	
			User Note:	City Attorney Copy Scan File	
51	06 41 13 00 0059		EA	15"-18" Wide, 30" High x 13" Deep Single Door Wall CabinetNote: Prefinished with solid hardwood face frames, hardwood door frames. Hardwood veneer on raised door panels.	$217.05
			Installation	Quantity 1.00 x Unit Price $184.57 x Factor 1.1760 = Total $217.05	
			User Note:	City Attorney Copy	
52	06 41 13 00 0062		EA	Up To 27" Wide, 30" High x 13" Deep Double Door Wall CabinetNote: Prefinished with solid hardwood face frames, hardwood door frames. Hardwood veneer on raised door panels.	$261.44
			Installation	Quantity 1.00 x Unit Price $222.31 x Factor 1.1760 = Total $261.44	
			User Note:	City Attorney Breakroom	
53	06 41 13 00 0062		EA	Up To 27" Wide, 30" High x 13" Deep Double Door Wall CabinetNote: Prefinished with solid hardwood face frames, hardwood door frames. Hardwood veneer on raised door panels.	$522.87
			Installation	Quantity 2.00 x Unit Price $222.31 x Factor 1.1760 = Total $522.87	
			User Note:	JP Breakroom	
54	06 41 13 00 0063		EA	27"-30" Wide, 30" High x 13" Deep Double Door Wall CabinetNote: Prefinished with solid hardwood face frames, hardwood door frames. Hardwood veneer on raised door panels.	$279.58
			Installation	Quantity 1.00 x Unit Price $237.74 x Factor 1.1760 = Total $279.58	
			User Note:	City Attorney Breakroom	
55	06 41 13 00 0064		EA	30"-36" Wide, 30" High x 13" Deep Double Door Wall CabinetNote: Prefinished with solid hardwood face frames, hardwood door frames. Hardwood veneer on raised door panels.	$314.92
			Installation	Quantity 1.00 x Unit Price $267.79 x Factor 1.1760 = Total $314.92	
			User Note:	City Attorney Copy	

Job Order Number:
Job Order Title:

Rec#	CSI Number	Mod.	UOM	Description	Line Total
06 - Wood, Plastic, and Composites					
56	06 41 13 00 0064		EA	30"-36" Wide, 30" High x 13" Deep Double Door Wall CabinetNote: Prefinished with solid hardwood face frames, hardwood door frames. Hardwood veneer on raised door panels.	$629.84
			Installation	Quantity 2.00 x Unit Price $267.79 x Factor 1.1760 = Total $629.84	
		User Note:	JP Breakroom		
57	06 41 13 00 0064		EA	30"-36" Wide, 30" High x 13" Deep Double Door Wall CabinetNote: Prefinished with solid hardwood face frames, hardwood door frames. Hardwood veneer on raised door panels.	$1,889.53
			Installation	Quantity 6.00 x Unit Price $267.79 x Factor 1.1760 = Total $1,889.53	
		User Note:	City Attorney Copy Scan File		
58	06 41 13 00 0064		EA	30"-36" Wide, 30" High x 13" Deep Double Door Wall CabinetNote: Prefinished with solid hardwood face frames, hardwood door frames. Hardwood veneer on raised door panels.	$314.92
			Installation	Quantity 1.00 x Unit Price $267.79 x Factor 1.1760 = Total $314.92	
		User Note:	City Attorney Breakroom		
59	06 41 13 00 0099		EA	Base Corner CabinetNote: Prefinished with solid hardwood face frames, hardwood door frames. Hardwood veneer on raised door panels.	$221.53
			Installation	Quantity 1.00 x Unit Price $188.38 x Factor 1.1760 = Total $221.53	
		User Note:	JP Reception		
60	06 41 13 00 0099		EA	Base Corner CabinetNote: Prefinished with solid hardwood face frames, hardwood door frames. Hardwood veneer on raised door panels.	$221.53
			Installation	Quantity 1.00 x Unit Price $188.38 x Factor 1.1760 = Total $221.53	
		User Note:	JP Breakroom		
61	06 42 19 00 0002		SF	1/16" Plastic Laminate, Includes Cutting To Fit	$1,181.82
			Installation	Quantity 199.00 x Unit Price $5.05 x Factor 1.1760 = Total $1,181.82	
		User Note:	countertops for all the millwork.		
Subtotal for 06 - Wood, Plastic, and Composites:					**$29,952.96**
08 - Openings					
62	08 05 13 00 0006		EA	For > 6 To 8 SF, Factory Installed 20 Gauge Metal Frame For Vision Glass In Door, Add	$558.84
			Installation	Quantity 3.00 x Unit Price $158.40 x Factor 1.1760 = Total $558.84	
		User Note:	Per door schedule		
63	08 05 13 00 0008		EA	For > 10 SF, Factory Installed 20 Gauge Metal Frame For Vision Glass In Door, Add	$504.50
			Installation	Quantity 2.00 x Unit Price $214.50 x Factor 1.1760 = Total $504.50	
		User Note:	Per door schedule		

Job Order Number:
Job Order Title:

Rec#	CSI Number	Mod.	UOM	Description	Line Total
08 - Openings					
64	08 12 13 13 0036		EA	3'x6'-8" Through 7'-2"x5-3/4" Deep Metal Door Frame, 16 Gauge	$3,044.81

	Quantity		Unit Price		Factor		Total
Installation	10.00	x	$203.36	x	1.1760	=	$2,391.51
Demolition	14.00	x	$39.68	x	1.1760	=	$653.29

User Note: New frames.

Rec#	CSI Number	Mod.	UOM	Description	Line Total
65	08 12 13 13 0036	Mod	EA	For Welded Frames, Add	$529.20

	Quantity		Unit Price		Factor		Total
Installation	10.00	x	$45.00	x	1.1760	=	$529.20

User Note: New frames.

Rec#	CSI Number	Mod.	UOM	Description	Line Total
66	08 12 13 13 0036	Mod	EA	For 14 Gauge Frame, Add	$364.56

	Quantity		Unit Price		Factor		Total
Installation	10.00	x	$31.00	x	1.1760	=	$364.56

User Note: New frames.

Rec#	CSI Number	Mod.	UOM	Description	Line Total
67	08 12 13 13 0065		EA	3'x6'-8" Through 7'-2"x6-3/4" Deep Metal Door Frame, 16 Gauge	$324.18

	Quantity		Unit Price		Factor		Total
Installation	1.00	x	$275.66	x	1.1760	=	$324.18

User Note: at the 2x6 framed walls

Rec#	CSI Number	Mod.	UOM	Description	Line Total
68	08 12 13 13 0065	Mod	EA	For Welded Frames, Add	$52.92

	Quantity		Unit Price		Factor		Total
Installation	1.00	x	$45.00	x	1.1760	=	$52.92

User Note: at the 2x6 framed walls

Rec#	CSI Number	Mod.	UOM	Description	Line Total
69	08 12 13 13 0065	Mod	EA	For 14 Gauge Frame, Add	$57.72

	Quantity		Unit Price		Factor		Total
Installation	1.00	x	$49.08	x	1.1760	=	$57.72

User Note: at the 2x6 framed walls

Rec#	CSI Number	Mod.	UOM	Description	Line Total
70	08 12 13 13 0071		EA	6'x6'-8" Through 7'-2"x6-3/4" Deep Metal Door Frame, 16 Gauge	$394.47

	Quantity		Unit Price		Factor		Total
Installation	1.00	x	$335.43	x	1.1760	=	$394.47

User Note: at the 2x6 framed walls

Rec#	CSI Number	Mod.	UOM	Description	Line Total
71	08 12 13 13 0071	Mod	EA	For Welded Frames, Add	$52.92

	Quantity		Unit Price		Factor		Total
Installation	1.00	x	$45.00	x	1.1760	=	$52.92

User Note: at the 2x6 framed walls

Rec#	CSI Number	Mod.	UOM	Description	Line Total
72	08 12 13 13 0071	Mod	EA	For 14 Gauge Frame, Add	$68.29

	Quantity		Unit Price		Factor		Total
Installation	1.00	x	$58.07	x	1.1760	=	$68.29

User Note: Per Specifications

Rec#	CSI Number	Mod.	UOM	Description	Line Total
73	08 12 13 13 0099		SF	5-3/4" Deep Sidelights, 16 Gauge Frame	$3,048.76

	Quantity		Unit Price		Factor		Total
Installation	88.00	x	$29.46	x	1.1760	=	$3,048.76

User Note: HW frames for the windows.

Rec#	CSI Number	Mod.	UOM	Description	Line Total
74	08 12 13 13 0099	Mod	SF	For 14 Gauge Frame, Add	$464.66

	Quantity		Unit Price		Factor		Total
Installation	88.00	x	$4.49	x	1.1760	=	$464.66

User Note: HW frames for the windows.

Job Order Number:
Job Order Title:

Rec#	CSI Number	Mod.	UOM	Description	Line Total
08 - Openings					
75	08 14 16 00 0129		EA	3'x7'x1-3/4" Solid Core, Birch Faced Door	$2,447.14

	Quantity		Unit Price		Factor		Total
Installation	12.00	x	$145.63	x	1.1760	=	$2,055.13
Demolition	14.00	x	$23.81	x	1.1760	=	$392.01

User Note: New doors per specs and door schedule.

76	08 14 16 00 0129	Mod	EA	For Commercial Grade 3/4 Hour Fire Rated Door, Add	$746.95

	Quantity		Unit Price		Factor		Total
Installation	12.00	x	$52.93	x	1.1760	=	$746.95

User Note: Commercial grade door.

77	08 14 16 00 0134		PR	Pair 3'x7'x1-3/4" Solid Core, Birch Faced Door	$336.92

	Quantity		Unit Price		Factor		Total
Installation	1.00	x	$286.50	x	1.1760	=	$336.92

User Note: New WD 2 door per door schedule.

78	08 14 16 00 0134	Mod	PR	For Commercial Grade 3/4 Hour Fire Rated Door, Add	$124.49

	Quantity		Unit Price		Factor		Total
Installation	1.00	x	$105.86	x	1.1760	=	$124.49

User Note: Commercial grade door.

79	08 16 13 00 0192		SI	1/4" Tempered, Factory Installed Vision Glass (Skule Door)	$337.56

	Quantity		Unit Price		Factor		Total
Installation	552.00	x	$0.52	x	1.1760	=	$337.56

User Note: Glass in the WD 2 and WD 3 doors per the door schedule.

80	08 34 73 00 0006		EA	Up To 3'x 7' Steel, 52 STC Rating Acoustical Door	$4,835.67

	Quantity		Unit Price		Factor		Total
Installation	1.00	x	$4,111.96	x	1.1760	=	$4,835.66

User Note: 1 sound doors. The second sound door has been removed at the Owners request.

81	08 41 00 00 0002		EA	3'x7'x1-3/4" Medium Stile, Aluminum Framed Entrance Doors Including Glazing, Trim And Hardware (Special-Lite SL-14)	$970.18

	Quantity		Unit Price		Factor		Total
Installation	0.00	x	$2,293.26	x	1.1760	=	$0.00
Demolition	2.00	x	$412.49	x	1.1760	=	$970.18

User Note: demo Storefront per plans and job walk.

82	08 43 13 00 0002		SF	Aluminum Storefront Framing	$2,619.54

	Quantity		Unit Price		Factor		Total
Installation	0.00	x	$13.40	x	1.1760	=	$0.00
Demolition	750.00	x	$2.97	x	1.1760	=	$2,619.54

User Note: demo Storefront per plans and job walk.

83	08 71 16 00 0027		PR	4-1/2" x 4-1/2" Heavy Duty, Full Mortise, Plain Bearing, Brass/Bronze, Satin Chrome Finish Hinge	$1,773.01

	Quantity		Unit Price		Factor		Total
Installation	19.50	x	$72.61	x	1.1760	=	$1,665.09
Demolition	21.00	x	$4.37	x	1.1760	=	$107.92

User Note: Install new per specs. remove old hardware.

84	08 71 16 00 0027	Mod	PR	For Clear Coated Bright Brass, Add	$160.29

	Quantity		Unit Price		Factor		Total
Installation	19.50	x	$6.99	x	1.1760	=	$160.29

User Note: Install new per specs

Job Order Number:
Job Order Title:

Rec#	CSI Number	Mod.	UOM	Description	Line Total
08 - Openings					
85	08 71 16 00 0459		EA	2-1/8" Overall Height, Satin Bronze Finish, Brass Floor Stop (Ives FS441)	$377.92
			Installation	Quantity 12.00 x Unit Price $26.78 x Factor 1.1760 = Total $377.92	
		User Note:		Install new per specs	
86	08 71 16 00 0927		EA	12" x 36", 0.050" Thick, Bright/Satin Brass Finish, Brass Kick Plate	$2,115.67
			Installation	Quantity 16.00 x Unit Price $112.44 x Factor 1.1760 = Total $2,115.67	
		User Note:		figuring both sides	
87	08 71 16 00 0927	Mod	EA	For Four Beveled Edges, Add	$33.12
			Installation	Quantity 16.00 x Unit Price $1.76 x Factor 1.1760 = Total $33.12	
		User Note:		figuring both sides	
88	08 71 16 00 2155		EA	Surface Mounted Heavy Duty Door Closer - LCN 4040/4041 Series	$3,883.76
			Installation	Quantity 12.00 x Unit Price $275.21 x Factor 1.1760 = Total $3,883.76	
		User Note:		specs call for this.	
89	08 71 16 00 2155	Mod	EA	For Plated Brass Finish, Add	$1,430.96
			Installation	Quantity 12.00 x Unit Price $101.40 x Factor 1.1760 = Total $1,430.96	
		User Note:		to match existing hardware in the building.	
90	08 71 16 00 2194		EA	Heavy Duty Cylindrical Passage Or Closet Lockset F75Note: Satin chrome plated US 26D (BHMA 626) - BHMA 156.2-1989, Grade 1(Corbin Russwin CL 3600)	$831.74
			Installation	Quantity 3.00 x Unit Price $189.46 x Factor 1.1760 = Total $668.41	
			Demolition	14.00 x $9.92 x 1.1760 = $163.32	
		User Note:		Hardware group 3. Remove old hardware.	
91	08 71 16 00 2198		EA	Heavy Duty Cylindrical Storeroom Or Closet Lockset F86Note: Satin chrome plated US 26D (BHMA 626) - BHMA 156.2-1989, Grade 1(Corbin Russwin CL 3600)	$2,373.25
			Installation	Quantity 9.00 x Unit Price $224.23 x Factor 1.1760 = Total $2,373.25	
		User Note:		hardware groups 1, 2, and 4.	
92	08 81 26 00 0047		SF	1/4" Thick, Laminated Glass With PVB Interlayer, Field Installed Glass	$1,359.83
			Installation	Quantity 88.00 x Unit Price $13.14 x Factor 1.1760 = Total $1,359.83	
		User Note:		new glass a the windows	
93	08 81 26 00 0047	Mod	SF	For Quantities > 50 To 200 (> 4.7 m2 To 18.6 m2), Deduct	-$22.77
			Installation	Quantity 88.00 x Unit Price $-0.22 x Factor 1.1760 = Total $-22.77	
		User Note:		new glass a the windows	

Subtotal for 08 - Openings: $36,201.06

09 - Finishes

Job Order Number:
Job Order Title:

Rec#	CSI Number	Mod.	UOM	Description	Line Total
09 - Finishes					
94	09 23 13 00 0014		SF	Skim Coat One Coat On Wall Plaster	$807.21
				Quantity / Unit Price / Factor / Total	
			Installation	1,320.00 x $0.52 x 1.1760 =	$807.21
		User Note:		Skim the walls to remain in hallway 301, lobby 300, and waiting 200 as discussed during the job walk.	
95	09 23 13 00 0014	Mod	SF	For Quantities > 500 To 2500, Deduct	-$77.62
				Quantity / Unit Price / Factor / Total	
			Installation	1,320.00 x $-0.05 x 1.1760 =	$-77.62
		User Note:		Skim the walls to remain in hallway 301, lobby 300, and waiting 200 as discussed during the job walk.	
96	09 23 13 00 0015		SF	For Each Additional Coat Over 1, Skim Coat Plaster	$589.88
				Quantity / Unit Price / Factor / Total	
			Installation	1,320.00 x $0.38 x 1.1760 =	$589.88
		User Note:		Skim the walls to remain in hallway 301, lobby 300, and waiting 200 as discussed during the job walk.	
97	09 23 13 00 0015	Mod	SF	For Quantities > 500 To 2500, Deduct	-$46.57
				Quantity / Unit Price / Factor / Total	
			Installation	1,320.00 x $-0.03 x 1.1760 =	$-46.57
		User Note:		Skim the walls to remain in hallway 301, lobby 300, and waiting 200 as discussed during the job walk.	
98	09 29 00 00 0005		SF	1/2" Drywall, One Layer, One Face On Wood Or Metal Studs Or Furring	$6,376.33
				Quantity / Unit Price / Factor / Total	
			Installation	6,596.75 x $0.60 x 1.1760 =	$4,654.67
			Demolition	7,320.00 x $0.20 x 1.1760 =	$1,721.66
		User Note:		new drywall on the new wood framing per plans and specs.	
99	09 29 00 00 0005	Mod	SF	For Wall Height > 12', Add	$73.76
				Quantity / Unit Price / Factor / Total	
			Installation	1,568.00 x $0.04 x 1.1760 =	$73.76
		User Note:		drywall to deck at sound walls.	
100	09 29 00 00 0013		SF	5/8" Fire Rated Drywall, One Layer, One Face On Wood Or Metal Studs Or Furring	$1,493.61
				Quantity / Unit Price / Factor / Total	
			Installation	1,568.00 x $0.81 x 1.1760 =	$1,493.61
		User Note:		For the sound proofing shown in the specifications. All 5/8 drywall is fire rated.	
101	09 29 00 00 0013	Mod	SF	For Wall Height > 12', Add	$92.20
				Quantity / Unit Price / Factor / Total	
			Installation	1,568.00 x $0.05 x 1.1760 =	$92.20
		User Note:		drywall to deck at sound walls.	
102	09 29 00 00 0046		SF	Tape, Spackle And Finish Drywall Walls Up To 10' Height	$2,327.33
				Quantity / Unit Price / Factor / Total	
			Installation	6,596.75 x $0.30 x 1.1760 =	$2,327.33
		User Note:		New drywall	
103	09 29 00 00 0046	Mod	SF	For ASTM C840 Level 1 Finish, Deduct	-$258.16
				Quantity / Unit Price / Factor / Total	
			Installation	1,568.00 x $-0.14 x 1.1760 =	$-258.16
		User Note:		level one finish at sound wall.	
104	09 29 00 00 0046	Mod	SF	For ASTM C840 Level 5 High Quality Finish, Add	$1,064.49
				Quantity / Unit Price / Factor / Total	
			Installation	5,028.75 x $0.18 x 1.1760 =	$1,064.49
		User Note:		match existing finish.	

Job Order Number:
Job Order Title:

Rec#	CSI Number	Mod.	UOM	Description	Line Total
09 - Finishes					
105	09 29 00 00 0056		LF	Tape, Spackle And Finish Vertical Corners Up To 10' HeightNote: Inside or outside drywall corners.	$1,334.29
			Installation	Quantity 1,830.00 x Unit Price $0.62 x Factor 1.1760 = Total $1,334.29	
		User Note:	New drywall		
106	09 29 00 00 0056	Mod	LF	For ASTM C840 Level 5 High Quality Finish, Add	$796.27
			Installation	Quantity 1,830.00 x Unit Price $0.37 x Factor 1.1760 = Total $796.27	
		User Note:	match existing finish.		
107	09 29 00 00 0061		LF	Tape, Spackle And Finish Horizontal Drywall Corners Up To 10' Height.Note: Inside or outside drywall corners.	$1,012.81
			Installation	Quantity 1,213.00 x Unit Price $0.71 x Factor 1.1760 = Total $1,012.81	
		User Note:	New drywall		
108	09 29 00 00 0061	Mod	LF	For ASTM C840 Level 5 High Quality Finish, Add	$613.39
			Installation	Quantity 1,213.00 x Unit Price $0.43 x Factor 1.1760 = Total $613.39	
		User Note:	match existing finish.		
109	09 29 00 00 0071		LF	Casing, J-Bead For Gypsum Wallboard	$3,271.16
			Installation	Quantity 1,830.00 x Unit Price $1.52 x Factor 1.1760 = Total $3,271.16	
		User Note:	New drywall		
110	09 30 13 00 0001		SF	Mounted Floor Tile, Less Than 8"x8"Note: Includes glazed porcelain, unglazed porcelain and glazed ceramic tiles. Tiles mounted from back, side or front in 12"x12", 12"x24", or similar sized sheets.	$401.02
			Installation	Quantity 0.00 x Unit Price $6.31 x Factor 1.1760 = Total $0.00	
			Demolition	310.00 x $1.10 x 1.1760 = $401.02	
		User Note:	Existing Tile removal		
111	09 30 13 00 0002		SF	Unmounted Floor Tile, 8"x8" And LargerNote: Includes glazed porcelain, unglazed porcelain and glazed ceramic tiles.	$383.05
			Installation	Quantity 0.00 x Unit Price $6.85 x Factor 1.1760 = Total $0.00	
			Demolition	479.00 x $0.68 x 1.1760 = $383.05	
		User Note:	Existing Tile removal		
112	09 51 13 00 0020		SF	2' x 4' x 3/4" Mineral Fiber Acoustical Ceiling Panels	$14,188.20
			Installation	Quantity 7,312.00 x Unit Price $1.42 x Factor 1.1760 = Total $12,210.46	
			Demolition	7,312.00 x $0.23 x 1.1760 = $1,977.75	
		User Note:	Remove and reinstall new 5974 SF in space to be remodeled, and an additional 1338 SF in hallway 303		
113	09 51 13 00 0020	Mod	SF	For Fire Rated Panels, Add	$3,783.52
			Installation	Quantity 7,312.00 x Unit Price $0.44 x Factor 1.1760 = Total $3,783.52	
		User Note:	Per product specifications this is a class a fire rating.		
114	09 51 13 00 0020	Mod	SF	For Quantities > 5000, Deduct	-$687.91
			Installation	Quantity 7,312.00 x Unit Price $-0.08 x Factor 1.1760 = Total $-687.91	
		User Note:	Remove and reinstall new		

Job Order Number:
Job Order Title:

Rec#	CSI Number	Mod.	UOM	Description	Line Total
09 - Finishes					
115	09 51 13 00 0020	Mod	SF	For Individual Room Quantities < 495, AddNote: For Use With Projects > 500 SF	$1,031.87
			Installation	Quantity 7,312.00 x Unit Price $0.12 x Factor 1.1760 = Total $1,031.87	
		User Note:	Remove and reinstall new		
116	09 51 13 00 0020	Mod	SF	For Single Angled Tegular Edge (Reveal), Add	$4,127.48
			Installation	Quantity 7,312.00 x Unit Price $0.48 x Factor 1.1760 = Total $4,127.48	
		User Note:	Per specifications		
117	09 51 13 00 0020	Mod	SF	For Scored Acoustical Tile, Add	$2,149.73
			Installation	Quantity 7,312.00 x Unit Price $0.25 x Factor 1.1760 = Total $2,149.73	
		User Note:	Per specifications		
118	09 53 23 00 0004		SF	T Bar Ceilings Suspension System 2'x 4', Standard 15/16"	$12,013.48
			Installation	Quantity 5,974.00 x Unit Price $1.51 x Factor 1.1760 = Total $10,608.39	
			Demolition	5,974.00 x $0.20 x 1.1760 = $1,405.08	
		User Note:	Remove and reinstall new.		
119	09 53 23 00 0004	Mod	SF	For Individual Room Quantities < 495, AddNote: For Use With Projects > 500 SF	$473.63
			Installation	Quantity 2,685.00 x Unit Price $0.15 x Factor 1.1760 = Total $473.63	
		User Note:	Per the room layout on the reflected ceiling plan.		
120	09 53 23 00 0004	Mod	SF	For Quantities > 4000 To 5000, Deduct	-$421.53
			Installation	Quantity 5,974.00 x Unit Price $-0.06 x Factor 1.1760 = Total $-421.53	
		User Note:	Remove and reinstall new.		
121	09 53 23 00 0016		LF	For Pencil Rod Support With Accessories And Attachments (Seismic Control Or Where Required)	$449.47
			Installation	Quantity 1,092.00 x Unit Price $0.35 x Factor 1.1760 = Total $449.47	
		User Note:	Figuring 6' for each location and figuring 2 at each light. Grid suspension excludes lighting.		
122	09 65 13 13 0007		LF	4" High 1/8" Rubber Base, Group 2 All (Except White)	$3,458.09
			Installation	Quantity 1,467.00 x Unit Price $1.65 x Factor 1.1760 = Total $2,846.57	
			Demolition	1,000.00 x $0.52 x 1.1760 = $611.52	
		User Note:	new rubber base.		
123	09 65 19 00 0010		SF	Skid Resistant Surface, Solid Vinyl Floor Tile, 1/8" Thick	$21,170.01
			Installation	Quantity 3,279.00 x Unit Price $5.49 x Factor 1.1760 = Total $21,170.01	
		User Note:	New LVT. I also added in hallways 214 and 213.		
124	09 65 19 00 0010	Mod	SF	For Quantities > 3000 To 6000, Deduct	-$732.66
			Installation	Quantity 3,279.00 x Unit Price $-0.19 x Factor 1.1760 = Total $-732.66	
		User Note:	New LVT. I also added in hallways 214 and 213.		

Job Order Number:
Job Order Title:

Rec#	CSI Number	Mod.	UOM	Description	Line Total
09 - Finishes					
125	09 65 19 00 0010		SF	Skid Resistant Surface, Solid Vinyl Floor Tile, 1/8" Thick	$1,878.31
Excludes Labor			Installation	Quantity 330.00 x Unit Price $4.84 x Factor 1.1760 = Total $1,878.31	
		User Note:	Attic stock		
126	09 65 19 00 0012		LF	Vinyl Transition Strip, Brown Or Black	$102.31
			Installation	Quantity 75.00 x Unit Price $1.16 x Factor 1.1760 = Total $102.31	
		User Note:	new transition strips.		
127	09 68 13 00 0006		SY	26 Ounce, Non-Patterned, Nylon Carpet Tile	$3,072.97
			Installation	Quantity 66.66 x Unit Price $39.20 x Factor 1.1760 = Total $3,072.97	
		User Note:	New carpet tile in the grand jury room.		
128	09 68 13 00 0006		SY	26 Ounce, Non-Patterned, Nylon Carpet Tile	$260.58
Excludes Labor, Excludes Equipment			Installation	Quantity 6.66 x Unit Price $33.27 x Factor 1.1760 = Total $260.58	
		User Note:	Attic stock		
129	09 68 16 00 0025		SY	26 Ounce, Medium Traffic, Non-Patterned, Nylon Broadloom Carpet	$134.87
Excludes Labor, Excludes Equipment			Installation	Quantity 6.66 x Unit Price $17.22 x Factor 1.1760 = Total $134.87	
		User Note:	Attic stock		
130	09 68 16 00 0025		SY	26 Ounce, Medium Traffic, Non-Patterned, Nylon Broadloom Carpet	$8,444.84
			Installation	Quantity 130.44 x Unit Price $23.84 x Factor 1.1760 = Total $3,656.99	
			Demolition	410.00 x $9.93 x 1.1760 = $4,787.85	
		User Note:	New Brodloom.		
131	09 81 16 00 0010		SF	6" Thick, 2.5 PCF Density, Sound Attenuation Fire Blanket (Thermafiber SAFB)	$4,769.10
			Installation	Quantity 2,668.00 x Unit Price $1.52 x Factor 1.1760 = Total $4,769.10	
		User Note:	Framing and sound insulation will be done to the deck. This also includes the sound batts in the ceiling that are to be cut to the size of the acoustical tile.		
132	09 91 23 00 0062		SF	Paint Interior Plaster/Drywall, 1 Coat Primer, Brush/Roller Work	$4,525.93
			Installation	Quantity 14,254.00 x Unit Price $0.27 x Factor 1.1760 = Total $4,525.93	
		User Note:	painting per finish schedule.		
133	09 91 23 00 0062	Mod	SF	For Quantities > 5000 To 10000, Deduct	-$502.88
			Installation	Quantity 14,254.00 x Unit Price $-0.03 x Factor 1.1760 = Total $-502.88	
		User Note:	painting per finish schedule.		
134	09 91 23 00 0064		SF	Paint Interior Plaster/Drywall, 2 Coats Paint, Brush/Roller Work	$9,219.49
			Installation	Quantity 14,254.00 x Unit Price $0.55 x Factor 1.1760 = Total $9,219.49	
		User Note:	painting per finish schedule.		
135	09 91 23 00 0064	Mod	SF	For Each Coat With Egg Shell Finish, Add	$167.63
			Installation	Quantity 14,254.00 x Unit Price $0.01 x Factor 1.1760 = Total $167.63	
		User Note:	painting per finish schedule.		

Job Order Number:
Job Order Title:

Rec#	CSI Number	Mod.	UOM	Description	Line Total
09 - Finishes					
136	09 91 23 00 0064	Mod	SF	For Quantities > 10000 To 20000, Deduct	-$1,341.02
			Installation	Quantity 14,254.00 x Unit Price $-0.08 x Factor 1.1760 = Total $-1,341.02	
		User Note:		painting per finish schedule.	
137	09 91 23 00 0246		LF	Paint Interior Metal Frame And Trim, 1 Coat Primer, Brush/Roller Work	$123.72
			Installation	Quantity 263.00 x Unit Price $0.40 x Factor 1.1760 = Total $123.72	
		User Note:		painting of the door and window frames.	
138	09 91 23 00 0248		LF	Paint Interior Metal Frame And Trim, 2 Coats Paint, Brush/Roller Work	$269.08
			Installation	Quantity 263.00 x Unit Price $0.87 x Factor 1.1760 = Total $269.08	
		User Note:		painting of the door and window frames.	
139	09 91 43 00 0013		SF	Hand Wash, Minor Repair And Light Sanding Drywall Surfaces	$1,260.67
			Installation	Quantity 5,360.00 x Unit Price $0.20 x Factor 1.1760 = Total $1,260.67	
		User Note:		Prep existing wall that will be painted per the finish schedule.	
140	09 91 43 00 0013	Mod	SF	For Quantities > 5000 To 10000, Deduct	-$63.03
			Installation	Quantity 5,360.00 x Unit Price $-0.01 x Factor 1.1760 = Total $-63.03	
		User Note:		Prep existing wall that will be painted per the finish schedule.	
141	09 91 43 00 0065		SF	Hot PatchNote: Includes wall patching, prime and paint.	$3,373.06
			Installation	Quantity 175.00 x Unit Price $16.39 x Factor 1.1760 = Total $3,373.06	
		User Note:		patch all new cut ins in existing walls.	
Subtotal for 09 - Finishes:					**$116,953.46**
13 - Special Construction					
142	13 01 11 00 0007		EA	Coring For Pipe Penetrations	$1,583.23
			Installation	Quantity 6.00 x Unit Price $224.38 x Factor 1.1760 = Total $1,583.23	
		User Note:		coring to run new line sets and condensate lines to the exterior of the building.	
Subtotal for 13 - Special Construction:					**$1,583.23**
21 - Fire Suppression					
143	21 01 10 00 0004		LF	Bleed Existing Lines Of Water	$493.92
			Installation	Quantity 1,500.00 x Unit Price $0.28 x Factor 1.1760 = Total $493.92	
		User Note:		Rework of the sprinkler system to fit the new office layout.	
144	21 01 10 00 0005		LF	Refill Existing Lines With Water	$599.76
			Installation	Quantity 1,500.00 x Unit Price $0.34 x Factor 1.1760 = Total $599.76	
		User Note:		Rework of the sprinkler system to fit the new office layout.	

Job Order Number:
Job Order Title:

Rec#	CSI Number	Mod.	UOM	Description	Line Total
21 - Fire Suppression					
145	21 13 13 00 0004		EA	Concealed Piping, Wet Automatic Sprinkler System, Light HazardNote: Includes branch pipe and fittings, supports and sprinkler heads with flat or conical escutcheon.	$5,758.05
			Installation	Quantity 15.00 x Unit Price $326.42 x Factor 1.1760 = Total $5,758.05	
		User Note:		Rework of the sprinkler system to fit the new office layout.	
146	21 21 16 00 0004		EA	Carbon Dioxide Cylinder, Heat/Ion Detector, With Bracket	$130.27
			Installation	Quantity 1.00 x Unit Price $110.77 x Factor 1.1760 = Total $130.27	
		User Note:		Per Owners request this will be installed at the Grand jury room. This unit will be a stand alone sensor.	
Subtotal for 21 - Fire Suppression:					**$6,982.00**
22 - Plumbing					
147	22 11 16 00 0566		LF	1/2" Inside Diameter (12 mm) Copper Pipe/Tubing Type L AssemblyNote: Prices Include All Hangers And Couplings, Elbow, Tee, Reducer Fittings. All Hangers Are Complete Assemblies	$556.01
			Installation	Quantity 40.00 x Unit Price $11.82 x Factor 1.1760 = Total $556.01	
		User Note:		Minimal piping for hot and cold water. It is assumed that the needed plumbing is close or in wall to these 2 locations.	
148	22 11 16 00 0566		LF	1/2" Inside Diameter (12 mm) Copper Pipe/Tubing Type L AssemblyNote: Prices Include All Hangers And Couplings, Elbow, Tee, Reducer Fittings. All Hangers Are Complete Assemblies	$5,838.13
			Installation	Quantity 420.00 x Unit Price $11.82 x Factor 1.1760 = Total $5,838.13	
		User Note:		new line sets and condensate lines to be run for the split systems. also including to rerun the copper new to the existing air handlers.	
149	22 11 16 00 0566	Mod	LF	For Type M Tubing Instead Of Type L, Deduct	-$355.62
			Installation	Quantity 420.00 x Unit Price $-0.72 x Factor 1.1760 = Total $-355.62	
		User Note:		new line sets and condensate lines to be run for the split systems. also including to rerun the copper new to the existing air handlers.	
150	22 11 23 39 0027		EA	1-1/2 HP Cast Iron In-Line Pump, 3" Flanges (B&G PD40S)	$6,511.11
			Installation	Quantity 2.00 x Unit Price $2,768.33 x Factor 1.1760 = Total $6,511.11	
		User Note:		Trash Pump	
151	22 13 13 00 0008		EA	Rough-in Kitchen Sink, (Counter), Single Fixture, Includes Cast Iron Waste Pipe And Vent And Copper Domestic Supply, Excludes Fixture Or Faucet	$956.09
			Installation	Quantity 2.00 x Unit Price $406.50 x Factor 1.1760 = Total $956.09	
		User Note:		New plumbing fixtures as seen in the elevations.	
152	22 13 16 00 0988		LF	3" (76 mm) ABS-PVC DWV Pipe Schedule 40 Pipe AssemblyNote: Includes all fittings, couplings and hangers. Fittings are assumed every 10'. Not for use where detail is available.	$396.08
			Installation	Quantity 20.00 x Unit Price $16.84 x Factor 1.1760 = Total $396.08	
		User Note:		Minimal piping for drain lines.	

Job Order Number:
Job Order Title:

Rec#	CSI Number	Mod.	UOM	Description	Line Total
22 - Plumbing					
153	22 42 16 00 0064		EA	22"x22"x7-1/4" Stainless Steel Kitchen Sink, Single Bowl, 20 Gauge (Elkay PSR2222)	$1,048.00
			Installation	Quantity 2.00 x Unit Price $445.58 x Factor 1.1760 = Total $1,048.00	
		User Note:		New plumbing fixtures as seen in the elevations.	
154	22 42 39 00 0008		EA	Top Cast Kitchen Faucet, Two Handle, Chrome Finish, Center Gooseneck Faucet, Lever Handles, Delta 2176-LHP+H24	$383.87
			Installation	Quantity 2.00 x Unit Price $163.21 x Factor 1.1760 = Total $383.87	
		User Note:		New plumbing fixtures as seen in the elevations.	
Subtotal for 22 - Plumbing:					**$15,333.67**
23 - Heating, Ventilating, And Air-Conditioning (HVAC)					
155	23 05 48 00 0007		EA	50-500# Rated Spring And Rubber Hanger For Vibration Isolation With 3/4" Max Rod Size	$1,132.91
			Installation	Quantity 12.00 x Unit Price $80.28 x Factor 1.1760 = Total $1,132.91	
		User Note:		vibration isolator	
156	23 05 93 00 0015		EA	Balancing HVAC Duct System, Ceiling Height To 12' Supply, Return, Exhaust, Register And Diffuser	$2,586.80
			Installation	Quantity 61.00 x Unit Price $36.06 x Factor 1.1760 = Total $2,586.80	
		User Note:		Comfort blancing	
157	23 07 13 00 0010		SF	1-1/2" Type 100 (1.0 LB/CF) FSK Fiber Glass Duct Wrap Insulation	$1,889.24
			Installation	Quantity 630.00 x Unit Price $2.55 x Factor 1.1760 = Total $1,889.24	
		User Note:		figuring to add 100 LF of 24"x14" duct. basing this off the plans that have been provided, no specific duct size has been given.	
158	23 09 23 00 0603		EA	Electronic Non-Programmable Heat/Cool Fan Coil Unit Thermostat (Honeywell T8575D)	$262.73
		Excludes Material	Installation	Quantity 3.00 x Unit Price $44.28 x Factor 1.1760 = Total $156.22	
			Demolition	3.00 x $30.19 x 1.1760 = $106.51	
		User Note:		relocate.	
159	23 09 23 00 0930		EA	20"x20" Low Leakage Volume Control Damper (Johnson Controls VOPSN-020X020)	$3,152.97
			Installation	Quantity 15.00 x Unit Price $178.74 x Factor 1.1760 = Total $3,152.97	
		User Note:		install new	
160	23 31 13 13 0006		LB	Sheet Metal Ductwork, Low Pressure, Shop Fabricated, Galvanized, Field Assemble And Install	$3,843.79
			Installation	Quantity 885.78 x Unit Price $3.69 x Factor 1.1760 = Total $3,843.79	
		User Note:		figuring to add 100 LF of 24"x14" duct. basing this off the plans that have been provided, no specific duct size has been given.	

Job Order Number:
Job Order Title:

Rec#	CSI Number	Mod.	UOM	Description	Line Total
23 - Heating, Ventilating, And Air-Conditioning (HVAC)					
161	23 31 13 13 0006	Mod	LB	For Quantities > 500 Lb. To 1000 Lb. (> 227 kg to 454 kg), Add	$656.26
				Quantity / Unit Price / Factor / Total	
			Installation	885.78 x $0.63 x 1.1760 =	$656.26
		User Note:		figuring to add 100 LF of 24"x14" duct. basing this off the plans that have been provided, no specific duct size has been given.	
162	23 33 46 00 0004		LF	6" Diameter Flexible Duct, Factory Fabricated, Preinsulated	$126.54
				Quantity / Unit Price / Factor / Total	
			Installation	20.00 x $5.38 x 1.1760 =	$126.54
		User Note:		new duct for the grand Jury room.	
163	23 33 46 00 0008		LF	12" Diameter Flexible Duct, Factory Fabricated, Preinsulated	$1,724.49
				Quantity / Unit Price / Factor / Total	
			Installation	120.00 x $12.22 x 1.1760 =	$1,724.49
		User Note:		estimating 8' per location to be demoed and install new flex duct at each of the 15 locations of the air supplies.	
164	23 34 16 00 0173		EA	Up To 10" Wheel Diameter, 1/16 HP, In-Line Duct FanNote: Direct drive. 115V. Includes disconnect switch.	$765.34
				Quantity / Unit Price / Factor / Total	
			Installation	1.00 x $650.80 x 1.1760 =	$765.34
		User Note:		outside air for the mini split.	
165	23 37 13 00 0037		EA	24" x 24" Ceiling Diffuser, Louver Face, Adjustable Pattern, Surface Mounted, Aluminum Construction With Damper	$2,144.85
				Quantity / Unit Price / Factor / Total	
			Installation	15.00 x $121.59 x 1.1760 =	$2,144.85
		User Note:		Per the plans provided by the County and the job walk we are assuming we may need to add 15 air supplies.	
166	23 37 13 00 0037	Mod	EA	For Lay-In Mount, Add	$249.43
				Quantity / Unit Price / Factor / Total	
			Installation	15.00 x $14.14 x 1.1760 =	$249.43
		User Note:		Per the plans provided by the County and the job walk we are assuming we may need to relocate 15 air supplies.	
167	23 37 13 00 0037		EA	24" x 24" Ceiling Diffuser, Louver Face, Adjustable Pattern, Surface Mounted, Aluminum Construction With Damper	$2,782.32
	Excludes Material			Quantity / Unit Price / Factor / Total	
			Installation	31.00 x $50.90 x 1.1760 =	$1,855.61
			Demolition	31.00 x $25.42 x 1.1760 =	$926.71
		User Note:		remove and reinstall	
168	23 37 13 00 0079		EA	24" x 24" Single Deflection Return/Exhaust Register, Aluminum, Opposed Blade Damper, Wall/Ceiling	$334.95
				Quantity / Unit Price / Factor / Total	
			Installation	2.00 x $142.41 x 1.1760 =	$334.95
		User Note:		two new returns in the grand jury room	

Job Order Number:
Job Order Title:

Rec#	CSI Number	Mod.	UOM	Description	Line Total
23 - Heating, Ventilating, And Air-Conditioning (HVAC)					
169	23 37 13 00 0103		EA	24" x 24" Double Deflection Return/Exhaust Register, Aluminum, Opposed Blade Damper, Wall/Ceiling	$510.95

	Quantity		Unit Price		Factor		Total
Installation	8.00	x	$43.26	x	1.1760	=	$406.99
Demolition	8.00	x	$11.05	x	1.1760	=	$103.96

Excludes Material

User Note: Per the plans provided by the County and the job walk we are assuming we may need to relocate 8 air supplies.

170	23 81 13 00 0019		EA	7-1/2 Ton Single Package Cooling, Vertical Wall Unit, Air To Air Type With Electric Heat	$2,846.18

	Quantity		Unit Price		Factor		Total
Installation	2.00	x	$806.75	x	1.1760	=	$1,897.48
Demolition	2.00	x	$403.36	x	1.1760	=	$948.70

Excludes Material

User Note: remove and reinstall.

171	23 81 26 00 0006		EA	17,500 BTU Wall Mounted Ductless Split System Air Conditioners, 20 SEERIncludes indoor unit, outdoor unit, wireless thermostat and refrigerant charge.	$4,480.37

	Quantity		Unit Price		Factor		Total
Installation	2.00	x	$1,904.92	x	1.1760	=	$4,480.37

User Note: These 2 units will be ceiling mounted per specifications.

172	23 81 29 00 0029		EA	17,500 BTU Cooling, 20,400 BTU Heating Wall Mounted Ductless Split System Heat Pumps, 20 SEERIncludes indoor unit, outdoor unit, wireless thermostat and refrigerant charge.	$4,891.95

	Quantity		Unit Price		Factor		Total
Installation	2.00	x	$2,079.91	x	1.1760	=	$4,891.95

User Note: These 2 units will be ceiling mounted per specifications.

Subtotal for 23 - Heating, Ventilating, And Air-Conditioning (HVAC): $34,382.07

26 - Electrical					
173	26 05 29 00 0265		LF	5/8" Diameter, Carbon Steel Threaded Rod	$174.99

	Quantity		Unit Price		Factor		Total
Installation	48.00	x	$3.10	x	1.1760	=	$174.99

User Note: rods to help support units

174	26 05 29 00 0281		EA	5/8" Inside Diameter, Carbon Steel Flat Washer	$13.55

	Quantity		Unit Price		Factor		Total
Installation	24.00	x	$0.48	x	1.1760	=	$13.55

User Note: unit support

175	26 05 29 00 0295		EA	5/8" Diameter, Carbon Steel Hex Nut	$13.55

	Quantity		Unit Price		Factor		Total
Installation	24.00	x	$0.48	x	1.1760	=	$13.55

User Note: unit support.

Job Order Number:
Job Order Title:

Rec#	CSI Number	Mod.	UOM	Description	Line Total
26 - Electrical					
176	26 05 33 13 0008		CLF	3/4" EMT With 4 #12 THHN/THWN AssemblyNote: Includes conduit, set screw connectors, set screw couplings, straps, wire as indicated. Not for use where detail is available.	$18,027.91
				Quantity / Unit Price / Factor / Total	
			Installation	29.20 x $414.34 x 1.1760 =	$14,228.10
			Demolition	21.70 x $148.90 x 1.1760 =	$3,799.81
		User Note:	remove old wiring for demolition and install new. remove all wiring prior to demolition for make safe. new wiring for the two mini splits.		
177	26 05 33 13 0045		LF	3/4" RGS Conduit With Coupling, Mounted Exposed On Flat Wall	$1,030.18
				Quantity / Unit Price / Factor / Total	
			Installation	240.00 x $3.65 x 1.1760 =	$1,030.18
		User Note:	Conduit raceways for data		
178	26 05 33 13 0045	Mod	LF	For Installation In Wood Stud Wall, Includes Drilling, Add	$155.23
				Quantity / Unit Price / Factor / Total	
			Installation	240.00 x $0.55 x 1.1760 =	$155.23
		User Note:	Conduit raceways for data		
179	26 05 33 16 0010		EA	3"x2"x2-1/2" Steel Box With Cover, Drywall Only, Flush Mount	$220.99
				Quantity / Unit Price / Factor / Total	
			Installation	24.00 x $7.83 x 1.1760 =	$220.99
		User Note:	Conduit raceways for data		
180	26 27 23 00 0025		EA	3" x 2-3/4", 10'-5" Height, Enamel Finish, Steel Communication And Power Pole	$687.75
				Quantity / Unit Price / Factor / Total	
			Installation	2.00 x $292.41 x 1.1760 =	$687.75
		User Note:	per note on A3		
181	26 27 26 00 0005		EA	1 Gang, 20 A, NEMA 5-20, Duplex Receptacle AssemblyNote: Includes box, receptacle and cover plate	$3,829.10
				Quantity / Unit Price / Factor / Total	
			Installation	74.00 x $35.02 x 1.1760 =	$3,047.58
			Demolition	72.00 x $9.23 x 1.1760 =	$781.52
		User Note:	New receptacles		
182	26 27 26 00 0007		EA	2 Gang, 20 A, NEMA 5-20, Duplex Receptacle AssemblyNote: Includes box, receptacle and cover plate	$357.27
				Quantity / Unit Price / Factor / Total	
			Installation	4.00 x $61.20 x 1.1760 =	$287.88
			Demolition	4.00 x $14.75 x 1.1760 =	$69.38
		User Note:	New receptacles		
183	26 27 26 00 0120		EA	1 Gang, 20 A, 120/277 V, SPST, Switch AssemblyNote: Includes box, switch and cover plate	$1,553.54
				Quantity / Unit Price / Factor / Total	
			Installation	28.00 x $37.95 x 1.1760 =	$1,249.62
			Demolition	28.00 x $9.23 x 1.1760 =	$303.93
		User Note:	new switch. Demo old prior to demo		
184	26 51 13 00 0108		EA	3 T8 Lamps, 2' x 2', Prismatic Lensed, Lay-In/Troffer Fluorescent Fixture	$895.76
				Quantity / Unit Price / Factor / Total	
			Installation	5.00 x $137.66 x 1.1760 =	$809.44
			Demolition	5.00 x $14.68 x 1.1760 =	$86.32
		User Note:	Remove old lighting and install new. Per a conversation with the Owner all lights are to be new.		

Job Order Number:
Job Order Title:

Rec#	CSI Number	Mod.	UOM	Description	Line Total
26 - Electrical					
185	26 51 13 00 0113		EA	3 T8 Lamps, 2' x 4', Prismatic Lensed, Lay-In/Troffer Fluorescent Fixture	$13,947.67

	Quantity		Unit Price		Factor		Total
Installation	86.00	x	$120.82	x	1.1760	=	$12,219.25
Demolition	86.00	x	$17.09	x	1.1760	=	$1,728.41

User Note: Remove old lighting and install new. Per a conversation with the Owner all lights are to be new.

186	26 52 00 00 0007		EA	54 Max Wattage At 90 Minutes, 6 Volt, Remote Capability, Polycarbonate Housing, Krypton Lamps, Commercial Emergency Light (Lithonia ELM654)	$2,231.64

	Quantity		Unit Price		Factor		Total
Installation	9.00	x	$210.85	x	1.1760	=	$2,231.64

User Note: Per reflected ceiling plan

187	26 53 00 00 0005		EA	Double Face, Thermoplastic Housing, LED Exit Sign With Battery Back-Up	$282.52

	Quantity		Unit Price		Factor		Total
Installation	2.00	x	$120.12	x	1.1760	=	$282.52

User Note: Per reflected ceiling plan

Subtotal for 26 - Electrical: **$43,421.65**

Proposal Total **$336,254.73**

This proposal total represents the correct total for the proposal. Any discrepancy between line totals, sub-totals and the proposal total is due to rounding of the line totals and sub-totals.

The Percent of NPP on this Proposal: **0.00%**

Statewide General Contracting JOC

www.eziqc.com

Summary Of Costs

JOC Project Name:	**Globe Court House remodel**	
JOC Project Number:	**17-GilaCounty-0002.00**	
Amount of Proposal:	**$336,254.73**	**Purchase Order Amount to Contractor**
Contractor:	**Arizona - SD Crane Builders, Inc.**	

Contractor:

Arizona - SD Crane Builders, Inc.
1901 E University Drive
Suite 330
Mesa, AZ 85203

(480) 832-1777

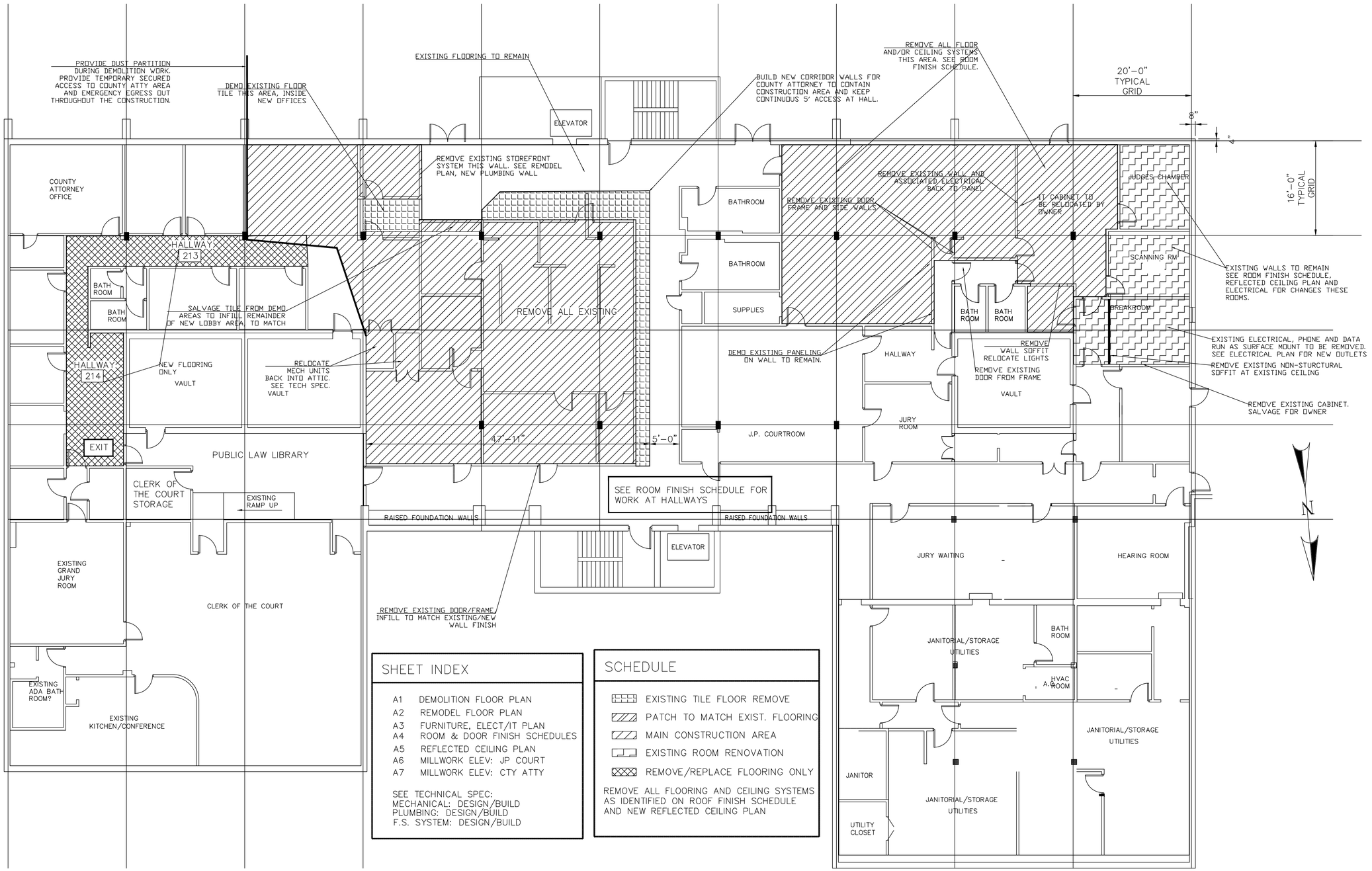

SHEET INDEX

A1	DEMOLITION FLOOR PLAN
A2	REMODEL FLOOR PLAN
A3	FURNITURE, ELECT/IT PLAN
A4	ROOM & DOOR FINISH SCHEDULES
A5	REFLECTED CEILING PLAN
A6	MILLWORK ELEV: JP COURT
A7	MILLWORK ELEV: CTY ATTY

SEE TECHNICAL SPEC:
MECHANICAL: DESIGN/BUILD
PLUMBING: DESIGN/BUILD
F.S. SYSTEM: DESIGN/BUILD

SCHEDULE

- EXISTING TILE FLOOR REMOVE
- PATCH TO MATCH EXIST. FLOORING
- MAIN CONSTRUCTION AREA
- EXISTING ROOM RENOVATION
- REMOVE/REPLACE FLOORING ONLY

REMOVE ALL FLOORING AND CEILING SYSTEMS AS IDENTIFIED ON ROOF FINISH SCHEDULE AND NEW REFLECTED CEILING PLAN

DEMOLITION PLAN

SCALE – 1/8"=1'-0"

CANYON COUNTRY DESIGN INC
CARYN PAIGE, ARCHITECT
YOUNG, AZ

TENANT IMPROVEMENTS
FIRST FLOOR
GLOBE COURTHOUSE

REGISTERED ARCHITECT
CERTIFICATE NO. 28521
CARYN J. PAIGE
ARIZONA, U.S.A.
Expires 12/31/18

A1

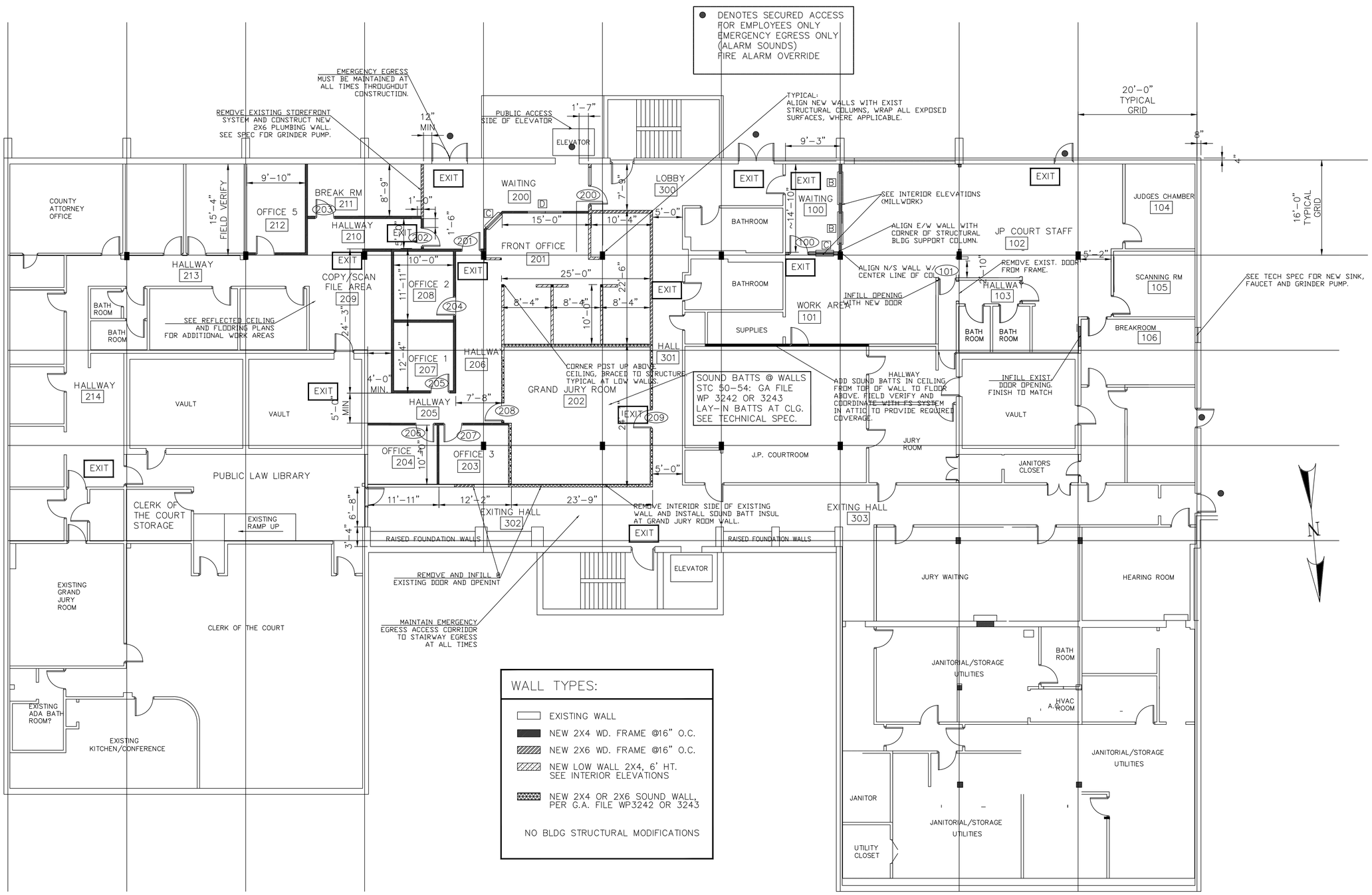

REMODEL FLOOR PLAN

SCALE – 1/8"=1'-0"

CANYON COUNTRY DESIGN INC
CARYN PAIGE, ARCHITECT
YOUNG, AZ

TENANT IMPROVEMENTS
FIRST FLOOR
GLOBE COURTHOUSE

REGISTERED ARCHITECT
CERTIFICATE NO. 28521
CARYN J. PAIGE
Signed
ARIZONA, U.S.A.
Expires 12/31/18

A2

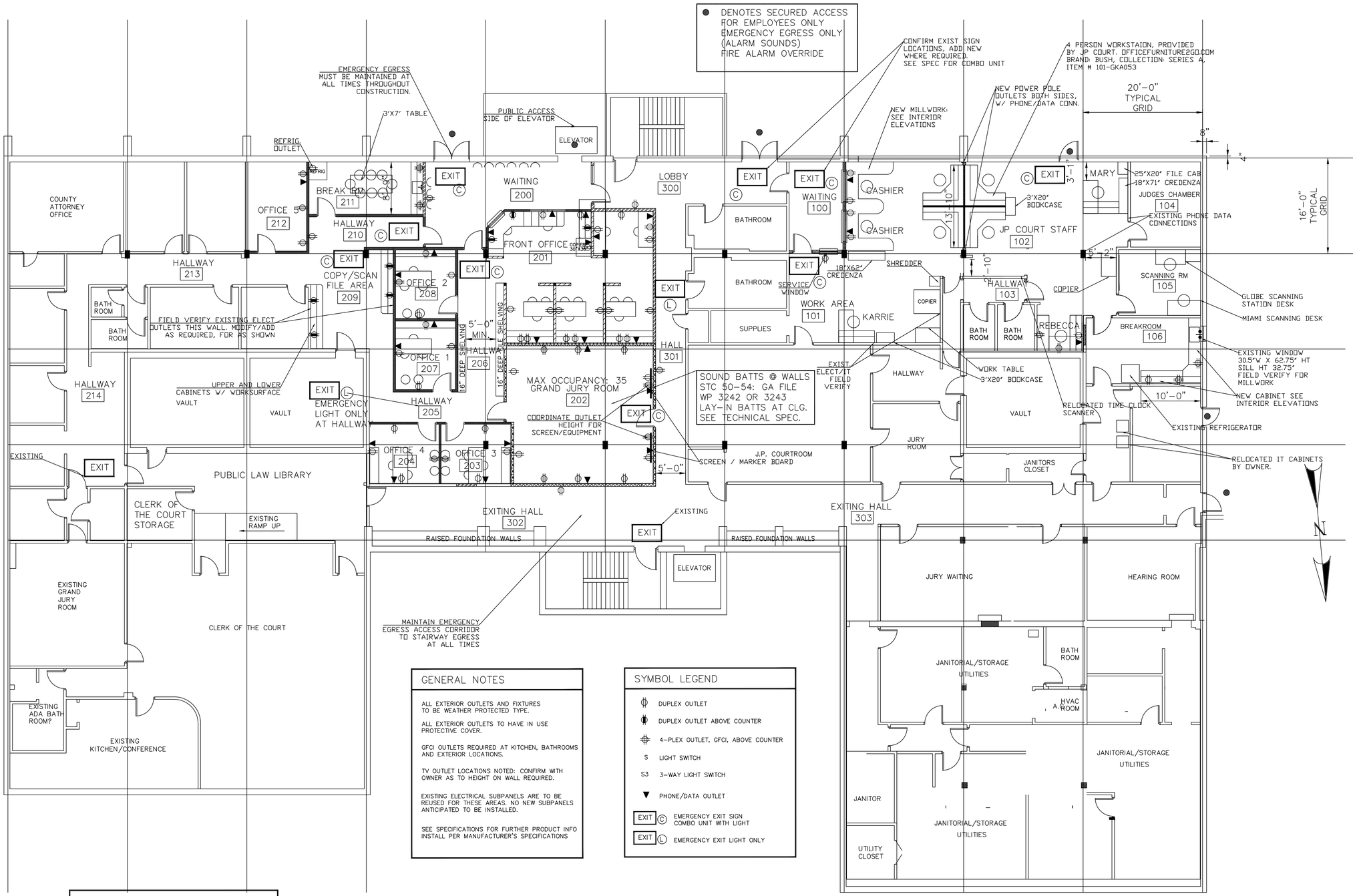

GENERAL NOTES

ALL EXTERIOR OUTLETS AND FIXTURES TO BE WEATHER PROTECTED TYPE.

ALL EXTERIOR OUTLETS TO HAVE IN USE PROTECTIVE COVER.

GFCI OUTLETS REQUIRED AT KITCHEN, BATHROOMS AND EXTERIOR LOCATIONS.

TV OUTLET LOCATIONS NOTED: CONFIRM WITH OWNER AS TO HEIGHT ON WALL REQUIRED.

EXISTING ELECTRICAL SUBPANELS ARE TO BE REUSED FOR THESE AREAS. NO NEW SUBPANELS ANTICIPATED TO BE INSTALLED.

SEE SPECIFICATIONS FOR FURTHER PRODUCT INFO INSTALL PER MANUFACTURER'S SPECIFICATIONS

SYMBOL LEGEND

- DUPLEX OUTLET
- DUPLEX OUTLET ABOVE COUNTER
- 4-PLEX OUTLET, GFCI, ABOVE COUNTER
- S LIGHT SWITCH
- S3 3-WAY LIGHT SWITCH
- PHONE/DATA OUTLET
- EXIT © EMERGENCY EXIT SIGN COMBO UNIT WITH LIGHT
- EXIT Ⓛ EMERGENCY EXIT LIGHT ONLY

EXISTING ELECTRICAL SUB PANELS:
JP COURTS: LOCATED ON FIRST FLOOR, NW AREA OF BUILDING, STORAGE AREA.
COUNTY ATTORNEY (OLD SCHOOLS) AREA: LOCATED ON FLOOR ABOVE.
COORDINATE WITH GILA COUNTY FACILITIES SERVICES FOR LOCATION AND ACCESS.

FURNITURE/ELECT/IT PLAN

SCALE – 1/8"=1'-0"

CANYON COUNTRY DESIGN INC
CARYN PAIGE, ARCHITECT
YOUNG, AZ

TENANT IMPROVEMENTS
FIRST FLOOR
GLOBE COURTHOUSE

REGISTERED ARCHITECT
CERTIFICATE NO. 28521
CARYN J. PAGE
Date Signed 10-19-18
ARIZONA, U.S.A.
Expires 12/31/18

A3

ROOM FINISH SCHEDULE

		FLOOR		WALL FINISH				CEILING		
ROOM NO.	ROOM NAME	FINISH	BASE	NORTH	SOUTH	EAST	WEST	FINISH	HEIGHT	REMARKS
	JUSTICE COURT REMODEL									
100	WAITING	EXIST	RSB	G.B./PAINT	EXIST. GLASS	EXIST./PAINT	G.B./PAINT	ACT	8' 10"	SEE SERVICE COUNTER ELEVATIONS
101	WORK AREA	LVT	RSB	EXIST./PAINT	G.B./PAINT	EXIST./PAINT	EXIST./PAINT	ACT	8' 10"	
102	JP COURT STAFF	LVT	RSB	EXIST./PAINT	EXIST. GLASS	G.B./PAINT	EXIST./PAINT	ACT	VARIES	SEE DEMO PLAN: PATCH/REPAIR TO MATCH
103	HALLWAY	LVT	RSB	EXIST./PAINT	EXIST./PAINT	EXIST./PAINT	EXIST./PAINT	REPLACE TILES	8' 10"	
104	JUDGES CHAMBER	LVT	RSB	EXIST./PAINT	EXIST./PAINT	EXIST./PAINT	EXIST./PAINT	ACT	8' 10"	
105	SCANNING ROOM	LVT	RSB	EXIST./PAINT	EXIST./PAINT	EXIST./PAINT	EXIST./PAINT	REPLACE TILES	8' 10"	
106	BREAK ROOM	LVT	RSB	EXIST./PAINT	EXIST./PAINT	EXIST./PAINT	EXIST./PAINT	ACT	8' 10"	SEE DEMO PLAN: PATCH/REPAIR TO MATCH
	COUNTY ATTORNEY REMODEL									
200	WAITING	EXIST	RSB	G.B./PAINT	EXISTING	G.B./PAINT	G.B./PAINT	ACT	8' 10"	
201	FRONT OFFICE	CARPET	RSB	G.B./PAINT	G.B./PAINT	G.B./PAINT	G.B./PAINT	ACT	8' 10"	
202	GRAND JURY ROOM	CARPET	RSB	G.B./PAINT	G.B./PAINT	G.B./PAINT	G.B./PAINT	ACT	8' 10"	SOUND PROOF: STC 50-54 SEE SPEC
203	OFFICE 3	CARPET	RSB	G.B./PAINT	G.B./PAINT	G.B./PAINT	G.B./PAINT	ACT	8' 10"	
204	OFFICE 4	CARPET	RSB	G.B./PAINT	G.B./PAINT	G.B./PAINT	G.B./PAINT	ACT	8' 10"	
205	HALLWAY	LVT	RSB	G.B./PAINT	G.B./PAINT	G.B./PAINT	G.B./PAINT	ACT	8' 10"	
206	HALLWAY	LVT	RSB	G.B./PAINT	G.B./PAINT	G.B./PAINT	G.B./PAINT	ACT	8' 10"	
207	OFFICE 1	CARPET	RSB	G.B./PAINT	G.B./PAINT	G.B./PAINT	G.B./PAINT	ACT	8' 10"	
208	OFFICE 2	CARPET	RSB	G.B./PAINT	G.B./PAINT	G.B./PAINT	G.B./PAINT	ACT	8' 10"	
209	COPY/SCAN/FILE AREA	LVT	RSB	EXIST./PAINT	G.B./PAINT	EXIST./PAINT	G.B./PAINT	ACT	8' 10"	
210	HALLWAY	LVT	RSB	G.B./PAINT	G.B./PAINT	G.B./PAINT	G.B./PAINT	ACT	8' 10"	
211	BREAK ROOM	LVT	RSB	G.B./PAINT	EXIST.GLASS	G.B./PAINT	G.B./PAINT	ACT	8' 10"	
212	OFFICE 5	CARPET	RSB	G.B./PAINT	EXIST.GLASS	EXIST./PAINT	G.B./PAINT	ACT	8' 10"	
	EXISTING HALLWAY/LOBBY AREAS									
300	LOBBY	EXISTING	*	G.B./PAINT	G.B./PAINT	G.B./PAINT	G.B./PAINT	ACT	8' 10"	VARIES: EXIST./PAINT AND G.B./PAINT
301	HALLWAY	EXISTING	*	NA	NA	G.B./PAINT	EXIST./PAINT	ACT	8' 10"	
302	HALLWAY	EXISTING	*	EXISTING	G.B./PAINT	EXISTING	NA	REPLACE TILES	7' 11"	
303	HALLWAY	EXISTING	EXISTING	EXISTING	EXISTING	NA	EXISTING	REPLACE TILES	7' 11"	

SEE TECHNICAL SPECIFICATIONS FOR PRODUCT INFORMATION

LVT	LUXURY VINYL TILE
G.B.	GYPSUM BOARD
TILE	PORCELAIN CERAMIC TILE
FRP	FIBER REINFORCED PLASTIC PANEL

WD. PANEL: WALNUT FINISHED WAINSCOT TO 3' A.F.F.

CARPET: SEE TECHNICAL SPECIFICATIONS FOR BROADLOOM AND MODULAR CARPET LOCATIONS

DOOR / HARDWARE SCHEDULE

		DOOR				FRAME	HARDWARE GROUP		
DOOR NO.	ROOM NAME	WIDTH	HEIGHT	THK	TYPE	MATERIAL / FINISH	HARDWARE GROUP	SECURITY KEYPAD	REMARKS
	JUSTICE COURT REMODEL								
100	OFFICES ENTRY	3'-0"	6'-8"	1 3/4"	WD-3	H.M. / PAINT	2	YES	W/GLASS LITE, SEE DOOR ELEVATIONS
101	HALLWAY	3'-0"	6'-8"	1 3/4"	WD-3	H.M. / PAINT	3		W/GLASS LITE, SEE DOOR ELEVATIONS
	COUNTY ATTORNEY REMODEL								
200	WAITING	3'-0"	6'-8"	1 3/4"	WD-2	H.M. / PAINT	3		W/GLASS LITE, SEE DOOR ELEVATIONS
201	FRONT OFFICE ENTRY	3'-0"	6'-8"	1 3/4"	WD-1	H.M. / PAINT	2	YES	
202	MAIN HALLWAY ENTRY	3'-0"	6'-8"	1 3/4"	WD-3	H.M. / PAINT	2	YES	W/GLASS LITE, SEE DOOR ELEVATIONS
203	BREAKROOM	3'-0"	6'-8"	1 3/4"	WD-1	H.M. / PAINT	3		
204	OFFICE 2	3'-0"	6'-8"	1 3/4"	WD-1	H.M. / PAINT	1		
205	OFFICE 1	3'-0"	6'-8"	1 3/4"	WD-1	H.M. / PAINT	1		
206	OFFICE 4	3'-0"	6'-8"	1 3/4"	WD-1	H.M. / PAINT	1		
207	OFFICE 3	3'-0"	6'-8"	1 3/4"	WD-1	H.M. / PAINT	1		
208	GRAND JURY AT OFFICES	3'-0"	6'-8"	1 3/4"	WD-1	H.M. / PAINT	4		SOUND: STC RATED 50 MIN.
209	GRAND JURY AT PUBLIC HALL	3'-0"	6'-8"	1 3/4"	WD-1	H.M. / PAINT	4	YES	SOUND: STC RATED 50 MIN.

SEE TECHNICAL SPECIFICATIONS FOR PRODUCT INFORMATION

	HARDWARE GROUP
1	OFFICE LOCKSET
2	SECURED ACCESS
3	PASSAGE (NO LOCKING)
4	CONFERENCE ROOM

	DOOR TYPES / FINISH
H.M.	HOLLOW METAL
S.C.	SOLID CORE WOOD
STL	STEEL
WD	WOOD

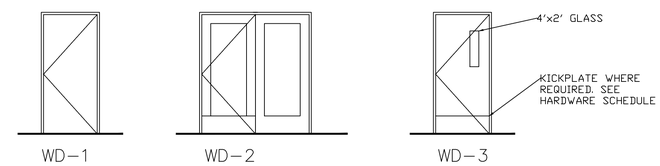

DOOR TYPES

VERIFY ALL DOOR SWINGS & ORIENTATION W/ PLAN AND OWNER PRIOR TO ORDERING.

NOT TO SCALE

TRANSACTION WINDOW

NOT TO SCALE

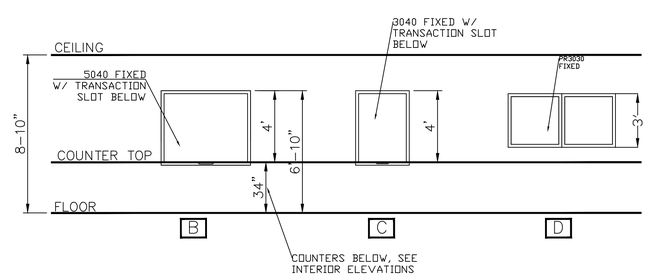

WINDOW TYPES

NOT TO SCALE

CANYON COUNTRY DESIGN INC
CARYN PAIGE, ARCHITECT
YOUNG, AZ

TENANT IMPROVEMENTS
FIRST FLOOR
GLOBE COURTHOUSE

REGISTERED ARCHITECT
CERTIFICATE NO. 28521
CARYN J. PAIGE
Date Signed 9-12-2
ARIZONA, U.S.A.
Expires 12/31/18

A4

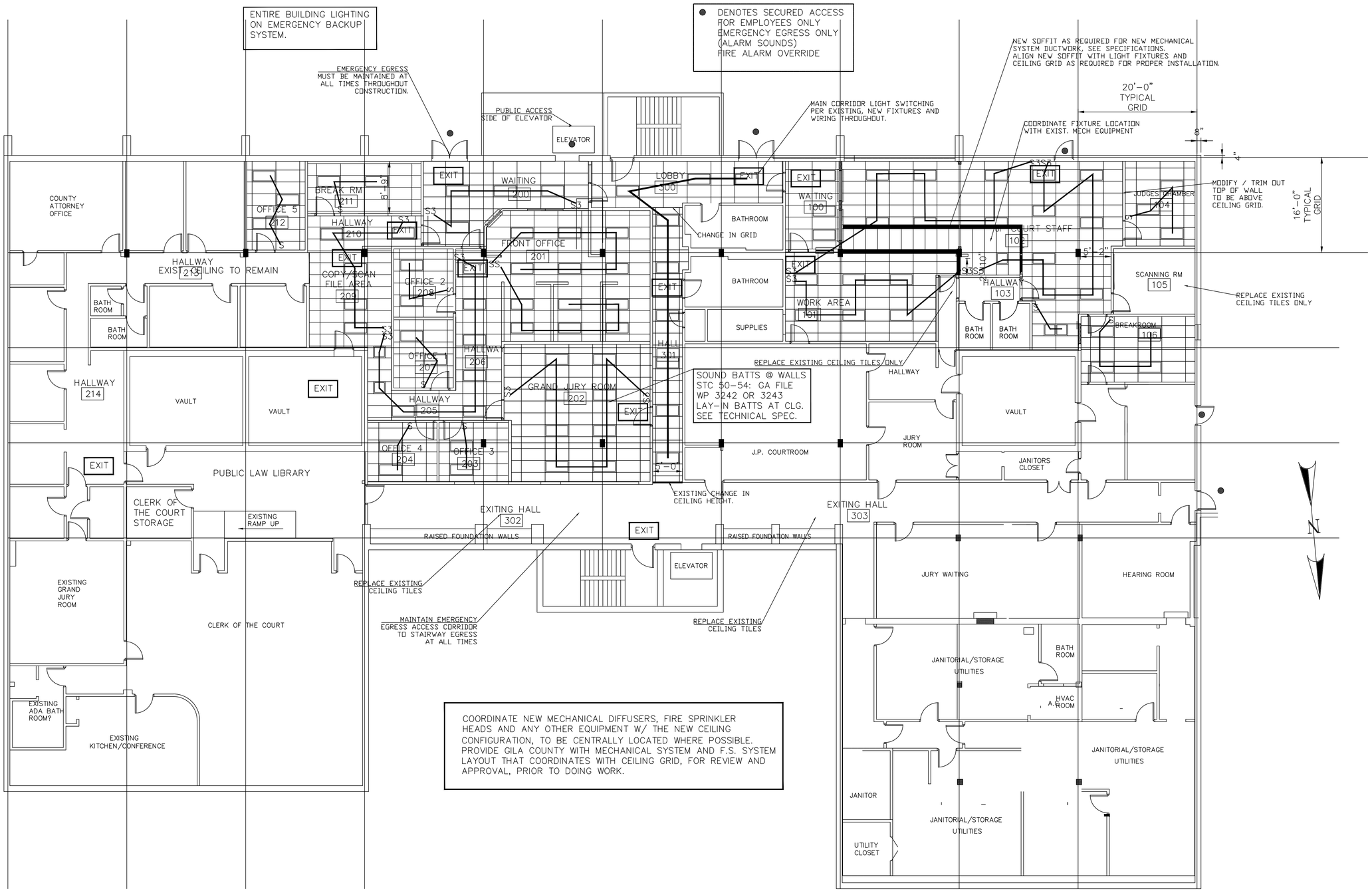

REFLECTED CEILING PLAN

SCALE – 1/8"=1'-0"

COORDINATE NEW MECHANICAL DIFFUSERS, FIRE SPRINKLER HEADS AND ANY OTHER EQUIPMENT W/ THE NEW CEILING CONFIGURATION, TO BE CENTRALLY LOCATED WHERE POSSIBLE. PROVIDE GILA COUNTY WITH MECHANICAL SYSTEM AND F.S. SYSTEM LAYOUT THAT COORDINATES WITH CEILING GRID, FOR REVIEW AND APPROVAL, PRIOR TO DOING WORK.

CANYON COUNTRY DESIGN INC
CARYN PAIGE, ARCHITECT
YOUNG, AZ

TENANT IMPROVEMENTS
FIRST FLOOR
GLOBE COURTHOUSE

REGISTERED ARCHITECT
CERTIFICATE NO. 28521
CARYN J. PAGE
Date Signed 10-12-18
ARIZONA, U.S.A.
Expires 12/31/18

A5

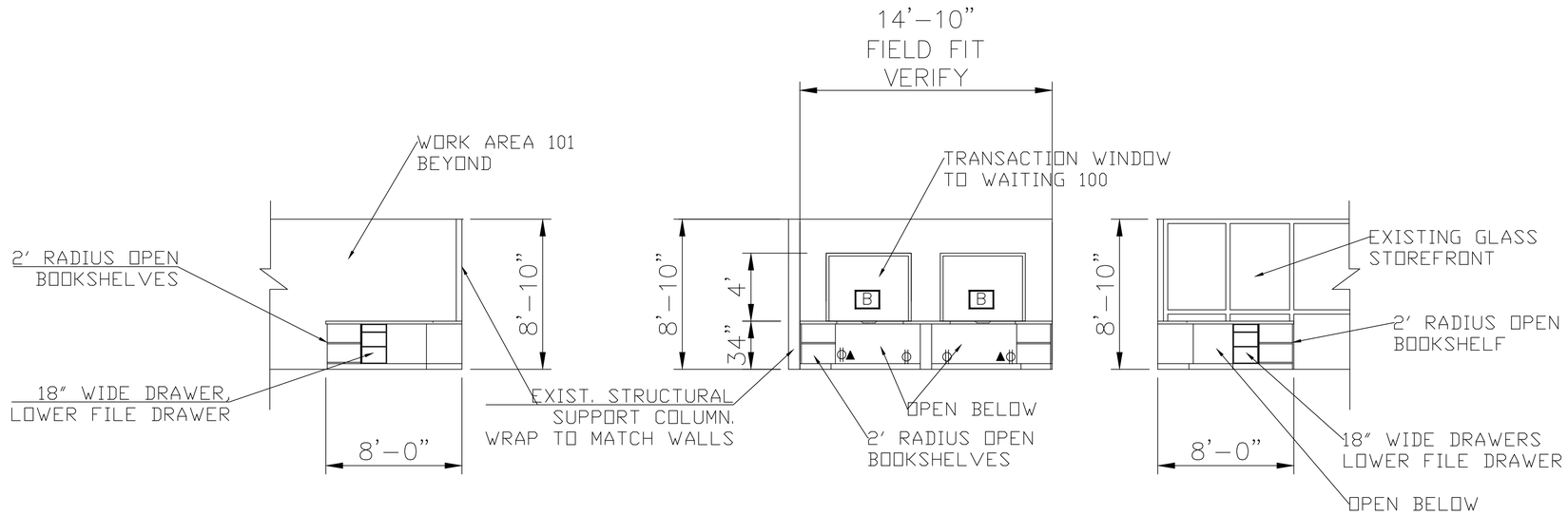

JP COURT RECEPTION

102

SCALE: 1/4" = 1'

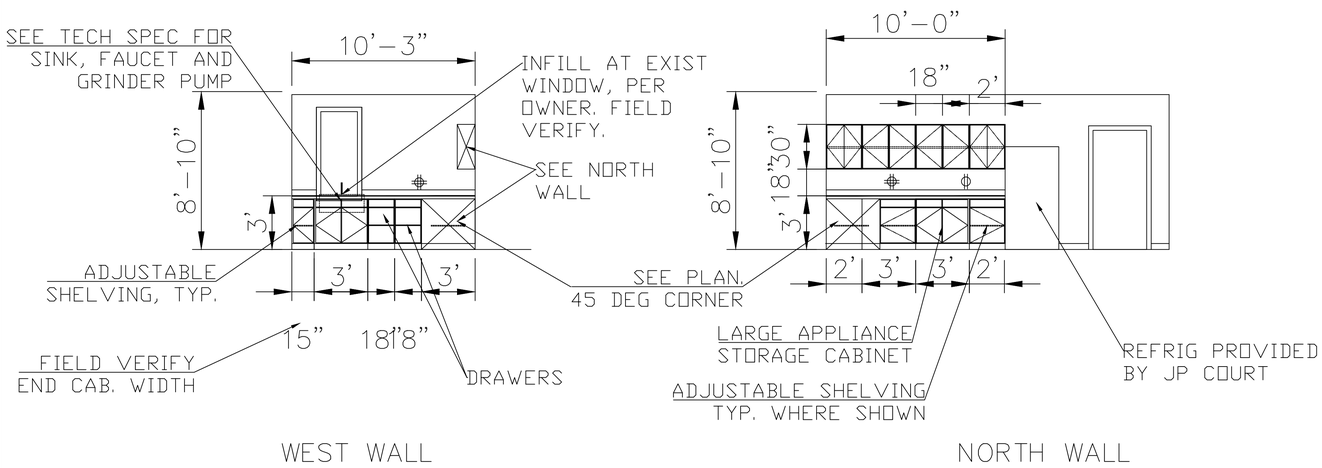

BREAKROOM

106

SCALE: 1/4" = 1'

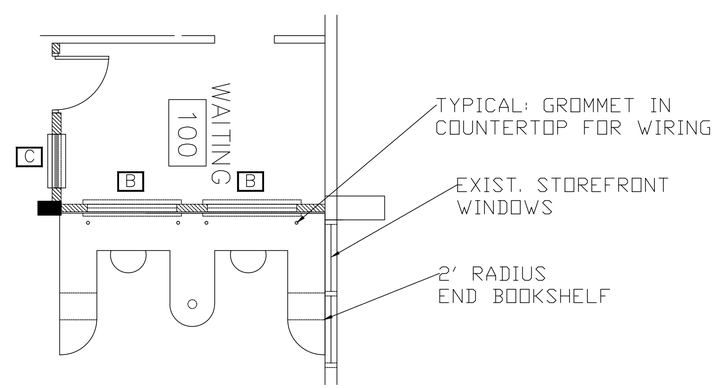

JP COURT RECEPTION

102

SCALE: 1/4" = 1'

CANYON COUNTRY DESIGN INC
CARYN PAIGE, ARCHITECT
YOUNG, AZ

TENANT IMPROVEMENTS
FIRST FLOOR
GLOBE COURTHOUSE

REGISTERED ARCHITECT
CERTIFICATE NO.
28521
CARYN J.
PAGE
Date Signed
ARIZONA, U.S.A.
Expires 12/31/18

A6

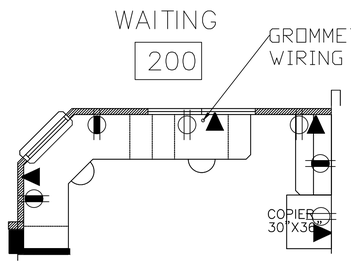

PLAN VIEW

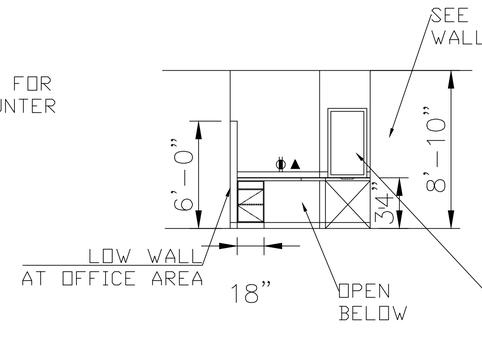

WEST WALL

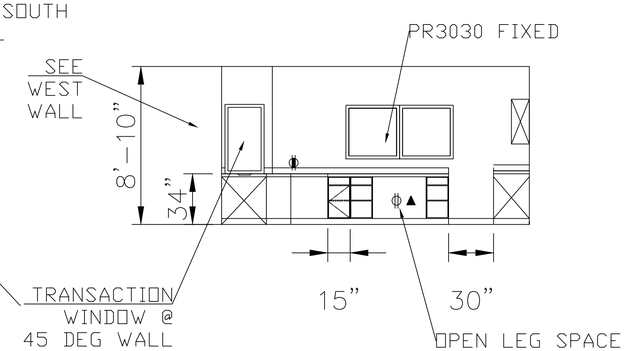

SOUTH WALL

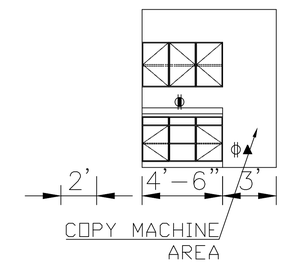

EAST WALL

CTY ATTY RECEPTION

201

SCALE: 1/4" = 1'

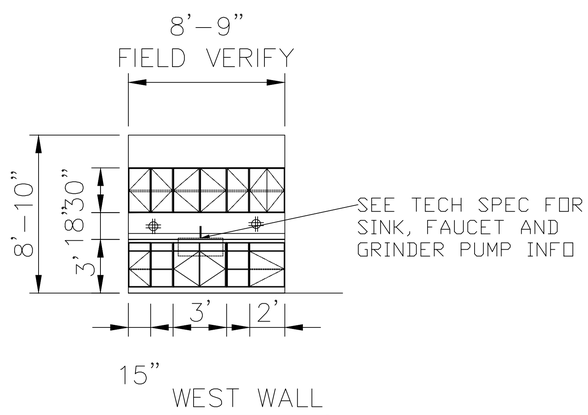

BREAK RM

211

SCALE: 1/4" = 1'

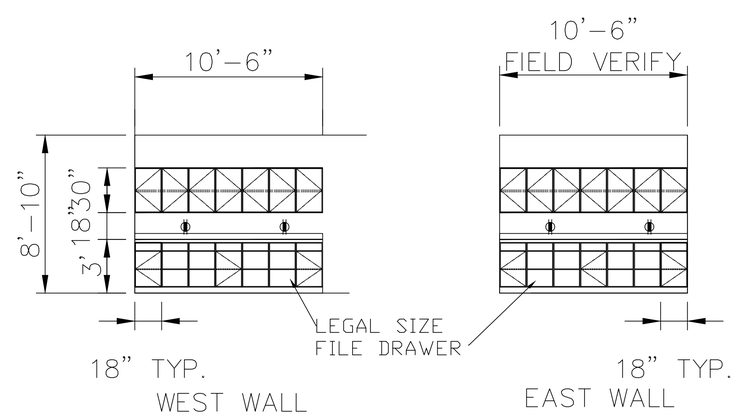

COPY/SCAN/FILE AREA

209

SCALE: 1/4" = 1'

CANYON COUNTRY DESIGN INC
CARYN PAIGE, ARCHITECT
YOUNG, AZ

TENANT IMPROVEMENTS
FIRST FLOOR
GLOBE COURTHOUSE

A7

	Contract Change Order Summary **Contract Amendment**	State of Arizona State Procurement Office 100 N. 15TH Avenue, Suite 201 Phoenix, AZ 85007
	Contract No.: ADSPO14-0813788	
	Change Order No.: 18 / Date: January 30, 2017	

Statewide Job Order Contracting

1. In accordance with Special Terms and Conditions Paragraph 5.1, Contract Amendments, the aforementioned contract is hereby extended **from January 31, 2017 to March 17, 2017.** This contract extension is in the best interest of the state in accordance with Competition Impracticable Determination to minimize disruption of construction services to agencies for Job Order Contracting Delivery Method while the state finalizes award for new unit pricing book and contractors. Contractor adjustment factor shall remain unchanged.

ALL OTHER REQUIREMENTS, SPECIFICATIONS, TERMS AND CONDITIONS REMAIN UNCHANGED.

ACKNOWLEDGEMENT AND AUTHORIZATION
This Change Order shall not be binding on the State until it is acknowledged and accepted electronically in ProcureAZ by an authorized representative of the Contractor and accepted by and authorized representative of the State.

ARF-4221 **Consent Agenda Item 4. A.**

Regular BOS Meeting

Meeting Date:	03/21/2017		
Submitted For:	Michael O'Driscoll, Director		
Submitted By:	Michael O'Driscoll, Director		
Department:	Health & Emergency Management	Division:	Health Services
Fiscal Year:	2016 - 2017	Budgeted?:	Yes
Contract Dates Begin & End:	July 1, 2016 - June 30 2017	Grant?:	Yes
Matching Requirement?:	No	Fund?:	Replacement

Information

Request/Subject

Approval of Amendment No. 2 to an Intergovernmental Agreement (Contract No. ADHS17-133182) with the Arizona Department of Health Services for Public Health Emergency Preparedness Funding. This amendment gives Gila County Department of Health Services and additional $14,029.43 for Public Health Emergency Preparedness activities and $10,000.00 for Zika Virus public education materials.

Background Information

The purpose of the Gila County Public Health Emergency Preparedness program is to readily prepare the staff and community for any public health emergency. This includes staff training, development of disaster plans, organizing disaster exercises, and procuring emergency supplies and equipment. The program exists to enhance all hazard strategic planning and direction, coordination and assessment, surveillance and detection capacities, risk communication and health information dissemination, telecommunications capabilities and education and training.

This Intergovernmental Agreement (Contract No. ADHS17-133182) began a new contract period for the public health emergency preparedness grant extending our funding from July 1, 2016, to June 30, 2017, in the amount of $186,389.67 and was approved by the Board of Supervisors at its June 21, 2016, meeting. Amendment No.1 to Contract No. ADHS17-133182 provided an additional $55,870 in funding to be used for Zika Virus community outreach, public education, and mosquito surveillance programs. Amendment No.2 to Contract No. ADHS17-133182 provides an additional $14,029.43 for Public Health Emergency Preparedness activities and $10,000 for Zika Virus public educational materials.

Evaluation

This funding will allow the Gila County Health and Emergency Management Division, Department of Public Health Emergency Preparedness, to continue to provide staff and community preparedness training; develop disaster plans; organize disaster exercises; and procure emergency supplies and equipment as well as the continued review and improvement of all hazard strategic planning and direction, coordination and assessment, surveillance and detection capacities, risk communication and health information dissemination, telecommunications capabilities and education and training. In addition, this funding will allow further community outreach and the creation of public educational materials for Zika Virus.

Conclusion

Approval of Amendment No. 2 to Intergovernmental Agreement-Contract No. ADHS17-133182 will allow the Gila County Health and Emergency Management Division to continue to improve emergency preparedness services and support to Gila County residents and additionally better prepare the county to respond and mitigate new and emerging infectious diseases.

Recommendation

It is the recommendation of the Health & Emergency Services Division Director that the Board of Supervisors approve Amendment No. 2 to the Intergovernmental Agreement (Contract No. ADHS17-133182) with the Arizona Department of Health Services for the amount of $24,029.43 to support the continuance of the public health emergency preparedness grant services from July 1, 2016, through June 30, 2017.

Suggested Motion

Approval of Amendment No. 2 to an Intergovernmental Agreement (Contract No. ADHS17-133182) between the Arizona Department of Health Services and the Gila County Health and Emergency Management Division for $24,029.43 in order to provide continued public health emergency preparedness services.

Attachments

ADHS17-133182 Amendment 2

ADHS17-133182 Amendment No. 1

ADHS17-133182 Original Contract

	INTERGOVERNMENTAL AGREEMENT(IGA) AMENDMENT	**ARIZONA DEPARTMENT OF HEALTH SERVICES** 150 North 18th Avenue, Suite 280 Phoenix, Arizona 85007 (602) 542-1040 (602) 542-1741 Fax
	Agreement No: **ADHS17-133182** — Amendment No.: **2**	Procurement Officer: **Russell Coplen**

Emergency Preparedness Program

Effective upon signature, it is mutually agreed that the Agreement referenced above is amended as follows:

1. Pursuant to Terms and Conditions, Provision 6. Contract Changes, Section 6.1 Amendments, Purchase Orders and Change Orders, the Price Sheet is revised to include the Price Sheet of this Amendment Two (2).

All other provisions shall remain in their entirety.

Gila County Contractor Name 5515 S. Apache Ave. Suite 400 Address Globe AZ 85501 City State Zip	**CONTRACTOR SIGNATURE** Contractor Authorized Signature Printed Name Title
CONTRACTOR ATTORNEY SIGNATURE Pursuant to A.R.S. § 11-952, the undersigned public agency attorney has determined that this Intergovernmental Agreement is in proper form and is within the powers and authority granted under the laws of the State of Arizona. Signature Date Printed Name	This Intergovernmental Agreement Amendment shall be effective the date indicated. The Public Agency is hereby cautioned not to commence any billable work or provide any material, service or construction under this IGA until the IGA has been executed by an authorized ADHS signatory. **State of Arizona** Signed this _____ day of _____ 2017 Procurement Officer
Attorney General Contract No. P0012014000078**,** which is an Agreement between public agencies, has been reviewed pursuant to A.R.S. § 11-952 by the undersigned Assistant Attorney General, who has determined that it is in proper form and is within the powers and authority granted under the laws of the State of Arizona. Signature Date Assistant Attorney General Printed Name:	

2. Pursuant to Terms and Conditions, Provision 6. Contract Changes, Section 6.1 Amendments, Purchase Orders and Change Orders**,** The following terms are added to the Special Terms and Conditions of this Amendment Two (2).

21. **Contracting; Procurement; Investment; Prohibitions**

21.1 A public entity may not enter into a contract with a company to acquire or dispose of services, supplies, information technology or construction unless the contract includes a written certification that the company is not currently engaged in, and agrees for the duration of the contract to not engage in, a boycott of Israel.

21.2 A public entity may not adopt a procurement, investment or other policy that has the effect of inducing or requiring a person or company to boycott Israel.

PRICE SHEET

PHEP Refresh Seven (7) Percent Funding Reinstated
July 1, 2016 through June 30, 2017

Cost Reimbursement

Description	Quantity	Unit Rate	Total Cost
Additional funds to enhance current PHEP activities.	1	$14,029.43	$14,029.43

PHEP Zika Phase II Funding
July 1, 2016 through June 30, 2017

Fixed Price

Description	Quantity	Unit Rate	Total Cost
Attachment A Deliverables and Activities per the Scope of Work	1	$10,000.00	$10,000.00

TOTAL	**$24,029.43**

INTERGOVERNMENTAL AGREEMENT(IGA) AMENDMENT

ARIZONA DEPARTMENT OF HEALTH SERVICES
150 North 18th Avenue, Suite 280
Phoenix, Arizona 85007
(602) 542-1040
(602) 542-1741 Fax

Agreement No: **ADHS17-133182** | Amendment No.: **1** | Procurement Officer: **Russell Coplen**

Emergency Preparedness Program

Effective upon signature, it is mutually agreed that the Agreement referenced above is amended as follows:

1. Pursuant to Terms and Conditions, Provision 6. Contract Changes, Section 6.1 Amendments, Purchase Orders and Change Orders, the Scope of Services is revised to add Scope of Services, Attachment A, of this Amendment One (1).
2. Pursuant to Terms and Conditions, Provision 6. Contract Changes, Section 6.1 Amendments, Purchase Orders and Change Orders, the Scope of Services is revised to add Scope of Services, Attachment B, of this Amendment One (1).
3. Pursuant to Terms and Conditions, Provision 6. Contract Changes, Section 6.1 Amendments, Purchase Orders and Change Orders, the Price Sheet is revised to add the Price Sheet of this Amendment One (1).

All other provisions shall remain in their entirety.

Gila County
Contractor Name

5515 S. Apache Ave. Suite 400
Address

Globe AZ 85501
City State Zip

CONTRACTOR SIGNATURE

x Michael A. Pastor
Contractor Authorized Signature

Michael A. Pastor
Printed Name

Chairman, Board of Supervisors
Title

CONTRACTOR ATTORNEY SIGNATURE

Pursuant to A.R.S. § 11-952, the undersigned public agency attorney has determined that this Intergovernmental Agreement is in proper form and is within the powers and authority granted under the laws of the State of Arizona.

x Jefferson R. Dalton 11-15-16
Signature Date

Jefferson R. Dalton, Deputy G.C.
Printed Name Attorney, Civil Bureau Chief

Attorney General Contract No. P0012014000078, which is an Agreement between public agencies, has been reviewed pursuant to A.R.S. § 11-952 by the undersigned Assistant Attorney General, who has determined that it is in proper form and is within the powers and authority granted under the laws of the State of Arizona.

Molly Bonsall 11-29-16
Signature
Date
Assistant Attorney General

Printed Name: Molly Bonsall

This Intergovernmental Agreement Amendment shall be effective the date indicated. The Public Agency is hereby cautioned not to commence any billable work or provide any material, service or construction under this IGA until the IGA has been executed by an authorized ADHS signatory.

State of Arizona

Signed this 1st day of December 2016

Procurement Officer

Attachment A
Scope of Services
Emergency Preparedness Program
July 1, 2016 to June 30, 2017

1. BACKGROUND

As of April 11, 2016, local vector-borne transmission of Zika virus was identified in more than 40 countries and U.S. territories in the Americas, including Puerto Rico, U.S. Virgin Islands, Marshall Islands, and American Samoa. To date, Zika has not spread by mosquitoes in the continental United States, but travel-associated cases are being reported. CDC continues to evaluate cases of Zika transmission in the United States and U.S. territories and has developed response plans to reduce the spread of ZVD associated with Aedes aegypti and Aedes albopictus mosquitoes and minimize maternal-fetal transmission of Zika virus. As the recipient of Zika supplemental funding (Sub-awardee) from the Arizona Department of Health Services (ADHS), your organization is required to adhere to Federal and State grant requirements.

2. DELIVERABLES

2.1. Budget Allocation

2.1.1. Complete the budget tool and work plan attached and return to ADHS for review and approval no later than July 31st, 2016. ADHS will not release funding until the work plan and budget tool have been approved.

2.1.2. All activities and procurements funded through this grant shall be aligned with your budget tool and activities that are not specifically identified within the budget tool must be approved by ADHS before the funds are utilized on those activities/items.

2.1.3. Applicable Office of Management and Budget (OMB) Circulars and Cost Principles must be followed when developing the budget and throughout the period of performance.

2.2. Grant Activity Oversight

2.2.1. Your organization's PHEP Coordinator will be the main point of contact for ADHS in regards to this grant. This individual will work closely with ADHS to ensure all deliverables and requirements are met, and will also direct all activities surrounding any onsite monitoring visits.

2.3. Performance

2.3.1. Failure to meet the deliverables and performance measures described in the Scope of Work may result in a reimbursement of funds to ADHS by the sub-awardee.

2.3.2. At the end of the performance period, July 30, 2018, any unexpended funds that have been awarded to sub-awardees for approved activities are subject to be returned to ADHS.

3. ACTIVITIES

3.1. Specific Activities Relating to this Zika Grant

3.1.1. Activity 1: Community Preparedness Strengthen Public Health Incident Management and Emergency Operations Coordination.

3.1.1.1. Sub-Awardee Output Requirements:

3.1.1.1.1. The Sub-awardee shall collaborate with state and local partners to evaluate and clarify elements from the state Zika response plan;

3.1.1.1.2. Develop a Zika specific AAR/IP that addresses the Sub-awardee's respective jurisdiction; and

3.1.1.1.3. Development of comprehensive Zika readiness, response and/or recovery plans.

3.1.2. Activity 2: Public Health Surveillance And Epidemiological Investigation

3.1.2.1. Sub-Awardee Output Requirements:

3.1.2.1.1. Create and/or update surveillance and investigation protocols to include Zika and other emerging/exotic disease monitoring and surveillance that will be reviewed with ADHS;

3.1.2.1.2. Monitor updates to the state's Contact/Exposed Persons tracking database found on the ADHS Health Services Portal (HSP);

3.1.2.1.3. Identify personnel who are capable of conducting health surveillance and epidemiological investigations for Zika and other emerging/exotic diseases; and

3.1.2.1.4. Attend ADHS sponsored "How To" trainings and an Infectious Disease Training and Exercise that addresses epidemiology, disease surveillance, investigation and control measures and emerging public health issues.

3.1.3. Activity 6A: Emergency Public Information And Warning/Information Sharing

3.1.3.1. Sub-Awardee Output Requirements:

3.1.3.1.1. Participate in the development of Zika messaging; e.g. talking points and message maps; and

3.1.3.1.2. Participate in ADHS offered spokesperson training to address public and media inquiries related to Zika cases.

3.1.4. Activity 6B: Emergency Public Information And Warning/Information Sharing (Webeoc)

3.1.4.1. Sub-Awardee Output Requirements:

3.1.4.1.1. Utilize mobile technology allowing access to disease information and the ability to receive alert messaging on hand held devices.

3.1.5. Activity 7: Medical Surge

3.1.5.1. Sub-Awardee Output Requirements:

3.1.5.1.1. Contribute to the collaboration among hospital, ambulatory facilities, county and tribal public health, schools, public safety agencies, non-profit organizations, community based special events and the community at large to respond to infectious disease threats;

3.1.5.1.2. Put into practice the statewide communication plan developed by ADHS to increase Z messaging effectiveness; and

3.1.5.1.3. Implement a process to utilize the ADHS messaging map for collaboration and coordination of responses to ensure the health and safety of Arizona residents in the event of an infectious disease threat of public significance.

4. NOTICES, CORRESPONDENCE, AND REPORTS

4.1. Notices, Correspondence and Reports from the Contractor to ADHS shall be sent to:

Arizona Department of Health Services
Public Health Emergency Preparedness
Bureau Chief
150 N 18th Avenue Ste.150
Phoenix, AZ 85007

4.2. Notices, Correspondence and Payments from the ADHS to the Contractor shall be sent to:

Gila County Health and Emergency Services
5515 S. Apache Ave, Suite 400
Globe, AZ 85501
Attn: Craig Humphrey
Phone: 928-402-4201
chumphrey@gilacountyaz.gov

4.3. Payments from ADHS to the Contractor shall be sent to the "Remit To" Address listed on the Contractor's ProcureAZ vendor profile.

Attachment B
Scope of Services
Epidemiology and Laboratory Capacity - Zika Counties
July 1, 2016 to July 31, 2017

1. BACKGROUND

1.1. With the increase of emerging infectious diseases such as Zika, local public health partners should maintain the capacity for surveillance, investigation and control of infectious diseases and public health incidents.

1.2. The first section of this document will outline the requirements set forth by Center for Disease Control (CDC) and ADHS that all County partners will need to address to ensure they are met during the reporting period. Progress on these requirements will be measured throughout the year through frequent communication and mid-year reporting.

1.3. Electronic exchange of personal health information should meet applicable patient privacy-related laws and standards, including state or territorial laws. These include the Health Insurance Portability and Accountability Act, the Health Information Technology for Economic and Clinical Health Act, and standards from the National Institute of Standards and Technology and the Office of the National Coordinator for Health Information Technology of the U.S. Department of Health and Human Services.

2. REQUIREMENTS

2.1. As a recipient of Epidemiology and Laboratory Capacity (ELC) Zika funds from the Arizona Department of Health Services (ADHS), you are required to adhere to Federal and State grant requirements. Below you will find a list of the program requirements for the funding.

2.1.1. County shall investigate 100% of suspected cases of Zika and provide public health actions.

2.1.1.1. Public health actions could include, but are not limited to:

2.1.1.1.1. Vector control strategies as new cases are identified;

2.1.1.1.2. Education about mosquito abatement;

2.1.1.1.3. Education about mosquito bite prevention;

2.1.1.1.4. Education about sexual transmission;

2.1.2. County shall create a Zika protocol within 90 days of receiving funds and share on the Health Services Portal (HSP) with ADHS.

2.1.2.1. Zika protocol must include:

2.1.2.1.1. Public health investigation: case investigation processes, contact lists, etc.

2.1.2.1.2. Case Follow-Up: follow up of women and infants in the pregnancy or birth defects registries

2.1.2.1.3. Communication: messaging templates, educational materials, etc.

2.1.2.1.4. Vector Control: processes and thresholds for mosquito surveillance, environmental assessment, mosquito control, etc.

2.1.2.1.5. Laboratory: specimen collection, transport to ASPHL, etc.

2.1.2.2. Acceptable uses of funding include, but are not limited to:

2.1.2.2.1. Hiring staff or contractors to support the activities of the jurisdiction's Zika protocol

2.1.2.2.2. Developing, printing and/or disseminating educational materials for providers or the public

2.1.2.2.3. Ordering equipment for mosquito trapping or control. (ADHS has received funding to provide mosquito trapping equipment to local health departments and to develop an educational media campaign).

3. REPORTING DELIVERABLES

3.1. The Contractor shall:

3.1.1. Deliverables and activities funded through the ELC Zika funds must be reported in a timely manner to ensure ADHS has adequate time to compile the information and submit to CDC.

3.1.2. Zika Interim Report. ADHS will send out the Report template in advance of the Due Date. DUE DATE: April 1st, 2017.

4. NOTICES, CORRESPONDENCE, AND REPORTS

4.1. Notices, Correspondence and Program Reports from the Contractor to ADHS shall be sent to:
Bureau of Epidemiology and Disease Control
Infectious Disease Epidemiology Program Manager
150 N 18th Avenue Ste.140
Phoenix, AZ 85007

CER Invoices shall be sent to:
Bureau of Epidemiology and Disease Control
Infectious Disease Epidemiology Program Manager
150 N 18th Avenue Ste.140
Phoenix, AZ 85007

4.2. Notices, Correspondence and Reports from the ADHS to the Contractor shall be sent to:

Gila County Health and Emergency Services
5515 S. Apache Ave, Suite 400
Globe, AZ 85501
Attn: Craig Humphrey
Phone: 928-402-4201
chumphrey@gilacountyaz.gov

4.3. Payments from ADHS to the Contractor shall be sent to the "Remit To" Address listed on the Contractor's ProcureAZ vendor profile.

PRICE SHEET

Fixed Price beginning July 1, 2016 through June 30, 2017

Description	Quantity	Unit Rate	Total Cost
Attachment A Deliverables and Activities per the Scope of Work	1	$22,000.00	$22,000.00

Fixed Price beginning July 1, 2016 through July 31, 2017

Description	Quantity	Unit Rate	Total Cost
Attachment B Deliverables and Activities per the Scope of Work	1	$33,870.00	$33,870.00

TOTAL	$55,870.00

INTERGOVERNMENTAL AGREEMENT (IGA)

Agreement No. ADHS17-133182

ARIZONA DEPARTMENT OF HEALTH SERVICES
1740 West Adams. Room 303
Phoenix, Arizona 85007
(602) 542-1040
(602) 542-1741 FAX

Project Title: Emergency Preparedness Program **Begin Date: 07/01/16**

Geographic Service Area: Gila County **Termination Date: 06/30/21**

Arizona Department of Health Services has authority to contract for services specified herein in accordance with A.R.S. §§ 11-951, 11-952. 36-104 and 36-132. The Contractor represents that it has authority to contract for the performance of the services provided herein pursuant to:

X	**Counties:**	**A.R.S. §§ 11-201, 11-951, 11-952 and 36-182.**
	Indian Tribes:	**A.R.S. §§ 11-951, 11-952 and the rules and sovereign authority of the contracting Indian Nation.**
	School Districts:	**A.R.S. §§ 11-951, 11-952, and 15-342.**
	City of Phoenix:	**Chapter II, §§ 1 & 2, Charter, City of Phoenix.**
	City of Tempe:	**Chapter 1, Article 1, §§ 1.01 & 1.03, Charter, City of Tempe.**

Amendments signed by each of the parties and attached hereto are hereby adopted by reference as a part of this Contract, from the effective date of the Amendment, as if fully set out herein.

Arizona Transaction (Sales) Privilege:
Federal Employer Identification No.:
Tax License No.:

Contractor Name: Gila County Address: 5515 S Apache Ave Suite 400 Globe, AZ 85501	FOR CLARIFICATION, CONTACT: Name: Josh Beck Telephone: 928-402-8805 E-mail: jbeck@gilacountyaz.gov
CONTRACTOR SIGNATURE: The Contractor agrees to perform all the services set forth in the Agreement and Work Statement 6-21-16 Signature of Person Authorized to Sign Date Michael A. Pastor, Chairman BOS Print Name and Title	This Contract shall henceforth be referred to as Contract No **ADHS17-133182.** The Contractor is hereby cautioned not to commence any billable work or provide any material, service or construction under this Contract until Contractor receives a fully executed copy of the Contract **State of Arizona** **Signed this** 18th **day of** July **, 2016** Procurement Officer
CONTRACTOR ATTORNEY SIGNATURE: Pursuant to A.R.S. § 11-952, the undersigned Contractor's Attorney has determined that this Intergovernmental Agreement is in proper form and is within the powers and authority granted under the laws of Arizona 6-21-16 Signature of Person Authorized to Sign Date Jefferson R. Dalton, Deputy Gila County Attorney, Civil Bureau Chief	Attorney General Contract, No. **P0012014000078**, which is an Agreement between public agencies, has been reviewed pursuant to A.R.S. § 11-952 by the undersigned Assistant Attorney General, who has determined that it is in the proper form and is within the powers granted under the laws of the State of Arizona to those parties to the Agreement represented by the Attorney General **The Attorney General, BY:** 07-12-16 Signature Date JO-ANN HANNY Assistant Attorney General

1. DEFINITION OF TERMS

As used in this Contract, the terms listed below are defined as follows:

1.1 *"Attachment"* means any document attached to the Contract and incorporated into the Contract.

1.2 *"ADHS"* means Arizona Department of Health Services.

1.3 *"Budget Term"* means the period of time for which the contract budget has been created and during which funds should be expended.

1.4 *"Change Order"* means a written order that is signed by a Procurement Officer and that directs the Contractor to make changes authorized by the Uniform Terms and Conditions of the Contract.

1.5 *"Contract"* means the combination of the Uniform and Special Terms and Conditions, the Specifications and Statement or Scope of Work, Attachments, Referenced Documents, any Contract Amendments and any terms applied by law.

1.6 *"Contract Amendment"* means a written document signed by the Procurement Officer and the Contractor that is issued for the purpose of making changes in the Contract.

1.7 *"Contractor"* means any person who has a Contract with the Arizona Department of Health Services.

1.8 *"Cost Reimbursement"* means a contract under which a contractor is reimbursed for costs, which are reasonable, allowable and allocable in accordance with the contract terms and approved by ADHS.

1.9 *"Days"* means calendar days unless otherwise specified.

1.10 *"Fixed Price"* establishes a set price per unit of service. The set price shall be based on costs, which are reasonable, allowable and allocable.

1.11 *"Gratuity"* means a payment, loan, subscription, advance, deposit of money, services, or anything of more than nominal value, present or promised, unless consideration of substantially equal or greater value is received.

1.12 *"Materials"* unless otherwise stated herein, means all property, including but not limited to equipment's, supplies, printing, insurance and leases of property.

1.13 *"Procurement Officer"* means the person duly authorized by the State to enter into and administer Contracts and make written determinations with respect to the Contract.

1.14 *"Purchase Order"* means a written document that is signed by a Procurement Officer, that requests a vendor to deliver described goods or services at a specific price and that, on delivery and acceptance of the goods or services by ADHS, becomes an obligation of the State.

1.15 *"Services"* means the furnishing of labor, time or effort by a Contractor or Subcontractor.

1.16 *"Subcontract"* means any contract, express or implied, between the Contractor and another party or between a subcontractor and another party delegating or assigning, in whole or in part, the making or furnishing of any material or any service required for the performance of this Contract.

1.17 *"State"* means the State of Arizona and/or the ADHS. For purposes of this Contract, the term "State" shall not include the Contractor.

2. CONTRACT TYPE

This Contract shall be:

___X___ Cost Reinbursement.

3. CONTRACT INTERPRETATION

3.1 Arizona Law. The law of Arizona applies to this Contract including, where applicable, the Uniform Commercial Code as adopted by the State of Arizona.

3.2 Implied Contract Terms. Each provision of law and any terms required by law to be in this Contract are a part of this Contract as if fully stated in it.

3.3 Contract Order of Precedence. In the event of a conflict in the provisions of the Contract, as accepted by the State and as they may be amended, the following shall prevail in the order set forth below:

3.3.1 Terms and Conditions;

3.3.2 Statement or Scope of Work;

3.3.3 Attachments;

3.3.4 Referenced Documents.

3.4 Relationship of Parties. The Contractor under this Contract is an independent Contractor. Neither party to this Contract shall be deemed to be the employee or agent of the other party to the Contract

3.5 Severability. The provisions of this Contract are severable. Any term or condition deemed illegal or invalid shall not affect any other term or condition of the Contract.

3.6 No Parole Evidence. This Contract is intended by the parties as a final and complete expression of their agreement. No course of prior dealings between the parties and no usage of the trade shall supplement or explain any terms used in this document.

3.7 No Waiver. Either party's failure to insist on strict performance of any term or condition of the Contract shall not be deemed a waiver of that term or condition even if the party accepting or acquiescing in the nonconforming performance knows of the nature of the performance and fails to object to it.

3.8 Headings. Headings are for organizational purposes only and shall not be interpreted as having legal significance or meaning.

4. CONTRACT ADMINISTRATION AND OPERATION

4.1. Term. As indicated on the signature page of the Contract, the Contract shall be effective as of the Begin Date and shall remain effective until the Termination Date.

4.2. Contract Renewal. This Contract shall not bind, nor purport to bind, the State for any contractual commitment in excess of the original Contract period. The term of the Contract shall not exceed five years. However, if the original Contract period is for less than five years, the State shall have the right, at its sole option, to renew the Contract, so long as the original Contract period together with the renewal periods does not exceed five years. If the State exercises such rights, all terms, conditions and provisions of the original Contract shall remain the same and apply during the renewal period with the exception of price and Scope of Work, which may be renegotiated.

4.3. New Budget Term. If a budget term has been completed in a multi-term Contract, the parties may agree to change the amount and type of funding to accommodate new circumstances in the next budget term. Any increase or decrease in funding at the time of the new budget term shall coincide with a change in the Scope of Work or change in cost of services as approved by the Arizona Department of Health Services.

4.4. Non-Discrimination. The Contractor shall comply with State Executive Order No. 1609-09 and all other applicable Federal and State laws, rules and regulations, including the Americans with Disabilities Act.

4.5. Records and Audit. Under A.R.S. § 35-214 and A.R.S. § 35-215, the Contractor shall retain and shall contractually require each subcontractor to retain all data and other records ("records") relating to the acquisition and performance of the Contract for a period of five years after the completion of the Contract. All records shall be subject to inspection and audit by the State and where applicable the Federal Government at reasonable times. Upon request, the Contractor shall produce a legible copy of any or all such records.

4.6. Financial Management. For all contracts, the practices, procedures, and standards specified in and required by the Accounting and Auditing Procedures Manual for the ADHS funded programs shall be used by the Contractor in the management of Contract funds and by the State when performing a Contract audit. Funds collected by the Contractor in the form of fees, donations and/or charges for the delivery of these Contract services shall be accounted for in a separate fund.

4.6.1 *Federal Funding.* Contractors receiving federal funds under this Contract shall comply with the certified finance and compliance audit provision of the Office of Management and Budget (OMB) Circular A-133, if applicable. The federal financial assistance information shall be stated in a Change Order or Purchase Order.

4.6.2 *State Funding.* Contractors receiving state funds under this Contract shall comply with the certified compliance provisions of A.R.S. § 35-181.03.

4.7. Inspection and Testing. The Contractor agrees to permit access, at reasonable times, to its facilities.

4.8. Notices. Notices to the Contractor required by this Contract shall be made by the State to the person indicated on the signature page by the Contractor, unless otherwise stated in the Contract. Notices to the State required by the Contract shall be made by the Contractor to an ADHS Procurement Officer, unless otherwise stated in the Contract. An authorized ADHS Procurement Officer and an authorized Contractor representative may change their respective person to whom notice shall be given by written notice, and an amendment to the Contract shall not be necessary.

4.9. Advertising and Promotion of Contract. The Contractor shall not advertise or publish information for commercial benefit concerning this Contract without the prior written approval of an ADHS Procurement Officer.

4.10. Property of the State.

4.10.1 *Equipment.* Except as provided below or otherwise agreed to by the parties, the title to any and all equipment acquired through the expenditure of funds received from the State shall remain the property of the State by and through the ADHS and, as such, shall remain under the sole direction, management and control of the ADHS. When this Contract is terminated, the disposition of all such property shall be determined by the ADHS. For Fixed Price contracts, when the Contractor provides the services/materials required by the Contract, any and all equipment purchased by the Contractor remains the property of the Contractor. All purchases of equipment need to be reported to the ADHS Office of Inventory Control.

4.10.2 *Title and Rights to Materials.* As used in this section, the term "Materials" means all products created or produced by the Contractor under this Contract, including, but not limited to: written and electronic information, recordings, reports, research, research findings, conclusions, abstracts, results, software, data and any other intellectual property or deliverables created, prepared, or received by the Contractor in performance of this Contract. Contractor acknowledges that all

ARIZONA DEPARTMENT OF HEALTH SERVICES
1740 West Adams. Room 303
Phoenix, Arizona 85007
(602) 542-1040
(602) 542-1741 FAX

Materials are the property of the State by and through the ADHS and, as such, shall remain under the sole direction, management and control of the ADHS. The Contractor is not entitled to a patent or copyright on these Materials and may not transfer a patent or copyright on them to any other person or entity. To the extent any copyright in any Materials may originally vest in the Contractor, the Contractor hereby irrevocably transfers to the ADHS, for and on behalf of the State, all copyright ownership. The ADHS shall have full, complete and exclusive rights to reproduce, duplicate, adapt, distribute, display, disclose, publish, release and otherwise use all Materials. The Contractor shall not use or release these Materials without the prior written consent of the ADHS. When this Contract is terminated, the disposition of all such Materials shall be determined by the ADHS. Further, the Contractor agrees to give recognition to the ADHS for its support of any program when releasing or publishing program Materials.

4.10.3 *Notwithstanding the above, if the Contractor is a State agency, the following shall apply instead:* It is the intention of ADHS and Contractor that all material and intellectual property developed under this Agreement be used and controlled in ways to produce the greatest benefit to the parties to this Contract and the citizens of the State of Arizona. As used in this paragraph, "Material" means all written and electronic information, recordings, reports, findings, research information, abstracts, results, software, data, discoveries, inventions, procedures and processes of services developed by the Contractor and any other materials created, prepared or received by the Contractor and subcontractors in performance of this Agreement. "Material" as used herein shall not include any pre-existing data, information, materials, discoveries, inventions or any form of intellectual property invented, created, developed or devised by Contractor (or its employees, subcontractors or agents) prior to the commencement of the services funded by this Agreement or that may result from Contractor's involvement in other service activities that are not funded by the Agreement.

4.10.4 Title and exclusive copyright to all Material shall vest in the State of Arizona, subject to any rights reserved on behalf of the federal government. As State agencies and instrumentalities, both ADHS and Contractor shall have full, complete, perpetual, irrevocable and non-transferable rights to reproduce, duplicate, adapt, make derivative works, distribute, display, disclose, publish and otherwise use any and all Material. The Contractor's right to use Material shall include the following rights: the right to use the Material in connection with its internal, non-profit research and educational activities, the right to present at academic or professional meetings or symposia and the right to publish in journals, theses, dissertations or otherwise of Contractor's own choosing. Contractor agrees to provide ADHS with a right of review prior to any publication or public presentation of the Material, and ADHS shall be entitled to request the removal of its confidential information or any other content the disclosure of which would be contrary to the best interest of the State of Arizona. Neither party shall release confidential information to the public without the prior expressly written permission of the other, unless required by the State public records statutes or other law, including a court order. Each party agrees to give recognition to the other party in all public presentations or publications of any Material, when releasing or publishing them.

4.10.5 In addition, ADHS and Contractor agree that any and all Material shall be made freely available to the public to the extent it is in the best interest of the State. However, if either party wants to license or assign an intellectual property interest in the material to a third-party for monetary compensation, ADHS and Contractor agree to convene to determine the relevant issues of title, copyright, patent and distribution of revenue. In the event of a controversy as to whether the Material is being used for monetary compensation or in a way that interferes with the best interest of the state or ADHS, then the Arizona Department of Administration shall make the final decision. Notwithstanding the above, "monetary compensation' does not include compensation paid to an individual creator for traditional publications in academia (the copyrights to which are Employee-Excluded Works under ABOR Intellectual Property Policy Section 6-908C.4.), an honorarium or other reimbursement of expenses for an academic or professional presentation, or an unprofitable distribution of Material.

4.11. E-Verify Requirements In accordance with A.R.S. § 41-4401, Contractor warrants compliance with all Federal immigration laws and regulations relating to employees and warrants its compliance with Section A.R.S. § 23-214, Subsection A.

4.12. Federal Immigration and Nationality Act. The Contractor shall comply with all federal, state and local immigration laws and regulations relating to the immigration status of their employees during the term of the Contract. Further, the Contractor shall flow down this requirement to all subcontractors utilized during the term of the Contract. The State shall retain the right to perform random audits of Contractor and subcontractor records or to inspect papers of any employee thereof to ensure compliance. Should the State determine that the Contractor and/or any subcontractors be found noncompliant, the State may pursue all remedies allowed by law, including, but not limited to; suspension of work, termination of the Contract for default and suspension and/or debarment of the Contractor.

5. COSTS AND PAYMENTS

5.1. Payments. Payments shall comply with the requirements of A.R.S. Titles 35 and 41, net 30 days. Upon receipt and acceptance of goods or services, the Contractor shall submit a complete and accurate Contractor's Expenditure Report for payment from the State within thirty (30) days, as provided in the Accounting and Auditing Procedures Manual for the ADHS.

5.2. Recoupment of Contract Payments.

5.2.1 *Unearned Advanced Funds*. Any unearned State funds that have been advanced to the Contractor and remain in its possession at the end of each budget term, or at the time of termination of the Contract, shall be refunded to the ADHS within forty-five (45) days of the end of a budget term or of the time of termination.

5.2.2 *Contracted Services*. In a fixed price contract, if the number of services provided is less than the number of services for which the Contractor received compensation, funds to be returned to *the* ADHS shall be determined by the Contract price. Where the price is determined by cost per unit of service or material, the funds to be returned shall be determined by multiplying the unit of service cost by the number of services the Contractor did not provide during the Contract term. Where the price for a deliverable is fixed, but the deliverable has not been completed, the Contractor shall be paid a pro rata portion of the completed deliverable. In a cost reimbursement contract, the ADHS shall pay for any costs that the Contractor can document as having been paid by the Contractor and approved by ADHS. In addition, the Contractor will be paid its reasonable actual costs for work in progress as determined by Generally Accepted Accounting Procedures up to the date of contract termination

5.2.3 *Refunds*. Within forty-five (45) days after the end of each budget term or of the time of termination of the Contract, the Contractor shall refund the greater of: i) the amount refundable in accordance with paragraph 4.2.1, Unearned Advanced Funds; or ii) the amount refundable in accordance with paragraph 5.2.2, Contracted Services.

5.2.4 *Unacceptable Expenditures*. The Contractor agrees to reimburse the ADHS for all Contract funds expended, which are determined by the ADHS not to have been disbursed by the Contractor in accordance with the terms of this Contract. The Contractor shall reimburse ADHS within 45 days of the determination of unacceptability.

5.3. Unit Costs/Rates or Fees. Unit costs/rates or fees shall be based on costs, which are determined by ADHS to be reasonable, allowable and allocable as outlined in the Accounting and Auditing Procedures Manual for the ADHS.

5.4. Applicable Taxes.

5.4.1 *State and Local Transaction Privilege Taxes.* The State of Arizona is subject to all applicable state and local transaction privilege taxes. Transaction privilege taxes apply to the sale and are the responsibility of the seller to remit. Failure to collect taxes from the buyer does not relieve the seller from its obligation to remit taxes.

5.4.2 *Tax Indemnification.* The Contractor and all subcontractors shall pay all federal, state and local taxes applicable to its operation and any persons employed by the Contractor. Contractor shall require all subcontractors to hold the State harmless from any responsibility for taxes, damages and interest, if applicable, contributions required under Federal, and/or state and local laws and regulations and any other costs, including transaction privilege taxes, unemployment compensation insurance, Social Security and Worker's Compensation.

5.4.3 *I.R.S. W9 Form.* In order to receive payment under any resulting Contract, the Contractor shall have a current I.R.S. W9 Form on file with the State of Arizona.

5.5. Availability of Funds for the Next Fiscal Year. Funds may not be presently available for performance under this Contract beyond the first year of the budget term or Contract term. The State may reduce payments or terminate this Contract without further recourse, obligation or penalty in the event that insufficient funds are appropriated in the subsequent budget term. The State shall not be liable for any purchases or Subcontracts entered into by the Contractor in anticipation of such funding. The Procurement Officer shall have the discretion in determining the availability of funds.

5.6. Availability of Funds for the Current Contract Term. Should the State Legislature enter back into session and decrease the appropriations through line item or general fund reductions, or for any other reason these goods or services are not funded as determined by ADHS, the following actions may be taken by ADHS:

5.6.1 Accept a decrease in price offered by the Contractor;

5.6.2 Reduce the number of goods or units of service and reduce the payments accordingly;

5.6.3 Offer reductions in funding as an alternative to Contract termination; or

5.6.4 Cancel the Contract

6. CONTRACT CHANGES

6.1. Amendments, Purchase Orders and Change Orders. This Contract is issued under the authority of the Procurement Officer who signed this Contract. The Contract may be modified only through a Contract Amendment, Purchase Order and/or Change Order within the scope of the Contract, unless the change is administrative or otherwise permitted by the Special Terms and Conditions. Changes to the Contract, including the addition of work or materials, the revision of payment terms, or the substitution of work or materials, directed by an unauthorized State employee or made unilaterally by the Contractor are violations of the Contract and of applicable law. Such changes, including unauthorized Contract Amendments, Purchase Orders and/or Change Orders, shall be void and without effect, and the Contractor shall not be entitled to any claim under this Contract based on those changes.

6.2. Subcontracts. The Contractor shall not enter into any subcontract under this Contract without the advance written approval of the Procurement Officer. The subcontract shall incorporate by reference all material and applicable terms and conditions of this Contract.

6.3. Assignments and Delegation. The Contractor shall not assign any right nor delegate any duty under this Contract without the prior written approval of the Procurement Officer. The State shall not unreasonably withhold approval.

7. RISK AND LIABILITY

7.1. Risk of Loss. The Contractor shall bear all loss of conforming material covered under this Contract until received and accepted by authorized personnel at the location designated in the Purchase Order, Change Order or Contract. Mere receipt does not constitute final acceptance. The risk of loss for nonconforming materials shall remain with the Contractor regardless of receipt.

7.2. Mutual Indemnification. Each party (as "indemnitor") agrees to indemnify, defend and hold harmless the other party (as "indemnitee") from and against any and all claims, losses, liability, costs or expenses (including reasonable attorney's fees) (hereinafter collectively referred to as "claims") arising out of bodily injury of any person (including death) or property damage, but only to the extent that such claims, which result in vicarious/derivative liability to the indemnitee, are caused by the act, omission, negligence, misconduct, or other fault of the indemnitor, its officers, officials, agents, employees or volunteers.

7.3. Indemnification - Patent and Copyright. To the extent permitted by A.R.S. § 41-621 and A.R.S. § 35-154, the Contractor shall indemnify and hold harmless the State against any liability, including costs and expenses, for infringement of any patent, trademark or copyright arising out of performance of the Contract or use by the State of materials furnished by or work performed under this Contract. The State shall reasonably notify the Contractor of any claim for which it may be liable under this paragraph.

7.4. Force Majeure

7.4.1. *Liability and Definition*. Except for payment of sums due, neither party shall be liable to the other nor deemed in default under this Contract if and to the extent that such party's performance of this Contract is prevented by reason of force majeure. The term "*force majeure*" means an occurrence that is beyond the control of the party affected and occurs without its fault or negligence. Without limiting the foregoing, force majeure includes acts of God; acts of the public enemy; acts of terrorism; war; riots; strikes; mobilization; labor disputes; civil disorders; fire; flood; lockouts; injunctions-interventions not caused by or resulting from the act or failure to act of the parties; failures or refusals to act by government authority not caused by or resulting from the act or failure to act of the parties; and other similar occurrences beyond the control of the party declaring force majeure, which such party is unable to prevent by exercising reasonable diligence.

7.4.2. *Exclusions*. Force Majeure shall not include the following occurrences:

7.4.2.1 Late delivery of Materials caused by congestion at a manufacturer's plant or elsewhere, or an oversold condition of the market;

7.4.2.2 Late performance by a subcontractor unless the delay arises out of a force majeure occurrence in accordance with this force majeure term and condition; or

7.4.2.3 Inability of either the Contractor or any subcontractor to acquire or maintain any required insurance, bonds, licenses or permits.

7.4.3. *Notice*. If either party is delayed at any time in the progress of the work by force majeure, the delayed party shall notify the other party in writing of such delay, as soon as is practicable and no later than the following working day of the commencement thereof, and shall specify the causes of such delay in such notice. Such notice shall be delivered or mailed certified-return receipt and shall make a specific reference to this article, thereby invoking its provisions. The delayed party shall cause such delay to cease as soon as practicable and shall notify the other party in writing when it has done so. The time of completion shall be extended by Contract Amendment for a period of time equal to the time that the results or effects of such delay prevent the delayed party from performing in accordance with this Contract.

7.4.4 *Default*. Any delay or failure in performance by either party hereto shall not constitute default hereunder or give rise to any claim for damages or loss of anticipated profits if, and to the extent that, such delay or failure is caused by force majeure.

7.5. Third Party Antitrust Violations. The Contractor assigns to the State any claim for overcharges resulting from antitrust violations to the extent that those violations concern materials or services supplied by third parties to the Contractor for or toward the fulfillment of this Contract.

8. DESCRIPTION OF MATERIALS

The following provisions shall apply to Materials only:

8.1. Liens. The Contractor agrees that the Materials supplied under this Contract are free of liens. In the event the Materials are not free of liens, Contractor shall pay to remove the lien and any associated damages or replace the Materials with Materials free of liens.

8.2. Quality. Unless otherwise modified elsewhere in these terms and conditions, the Contractor agrees that, for one year after acceptance by the State of the Materials, they shall be:

8.2.1. Of a quality to pass without objection in the Contract description;

8.2.2. Fit for the intended purposes for which the Materials are used;

8.2.3. Within the variations permitted by the Contract and are of even kind, quantity, and quality within each unit and among all units;

8.2.4. Adequately contained, packaged and marked as the Contract may require; and

8.2.5. Conform to the written promises or affirmations of fact made by the Contractor

8.3. Inspection/Testing. Subparagraphs 8.1 through 8.2 of this paragraph are not affected by inspection or testing of or payment for the Materials by the State.

8.4. Compliance With Applicable Laws. The Materials and services supplied under this Contract shall comply with all applicable federal, state and local laws, and the Contractor shall maintain all applicable license and permit requirements.

8.5. Survival of Rights and Obligations After Contract Expiration and Termination.

8.5.1. *Contractor's Representations*. All representations and warranties made by the Contractor under this Contract in paragraphs 7 and 8 shall survive the expiration or termination hereof. In addition, the parties hereto acknowledge that pursuant to A.R.S. § 12.510, except as provided in A.R.S. § 12-529, the State is not subject to or barred by any limitations of actions prescribed in A.R.S. Title 12, Chapter 5.

8.5.2. *Purchase Orders and Change Orders*. Unless otherwise directed in writing by the Procurement Officer, the Contractor shall fully perform and shall be obligated to comply with all Purchase Orders and Change Orders received by the Contractor prior to the expiration or termination hereof, including, without limitation, all Purchase Orders and Change Orders received prior to but not fully performed and satisfied at the expiration or termination of this Contract.

9. STATE'S CONTRACTUAL REMEDIES

9.1. Right to Assurance. If the State, in good faith, has reason to believe that the Contractor does not intend to, or is unable to, perform or continue performing under this Contract, the Procurement Officer may demand in

writing that the Contractor give a written assurance of intent to perform. Failure by the Contractor to provide written assurance within the number of Days specified in the demand may, at the State's option, be the basis for terminating the Contract.

9.2. Stop Work Order.

9.2.1. *Terms*. The State may, at any time, by written order to the Contractor, require the Contractor to stop all or any part of the work called for by this Contract for a period up to ninety (90) Days after the order is delivered to the Contractor, and for any further period to which the parties may agree. The order shall be specifically identified as a stop work order issued under this clause. Upon receipt of the order, the Contractor shall immediately comply with its terms and take all reasonable steps to minimize the incurrence of costs allocable to the work covered by the order during the period of work stoppage.

9.2.2. *Cancellation or Expiration*. If a stop work order issued under this clause is canceled or the period of the order or any extension expires, the Contractor shall resume work. The Procurement Officer shall make an equitable adjustment in the delivery schedule or Contract price, or both, and the Contract shall be amended in writing accordingly.

9.3. Non-exclusive Remedies. The rights and remedies of ADHS under this Contract are not exclusive, and ADHS is entitled to all rights and remedies available to it, including those under the Arizona Uniform Commercial Code and Arizona common law.

9.4. Right of Offset. The State shall be entitled to offset against any sums due the Contractor in any Contract with the State or damages assessed by the State because of the Contractor's non-conforming performance or failure to perform this Contract. The right to offset may include, but is not limited to, a deduction from an unpaid balance and a collection against the bid and/or performance bonds. Any offset taken for damages assessed by the State shall represent a fair and reasonable amount for the actual damages and shall not be a penalty for non-performance.

10. CONTRACT TERMINATION

10.1. Cancellation for Conflict of Interest. Pursuant to A.R.S. § 38-511, the State may cancel this Contract within three (3) years after Contract execution without penalty or further obligation if any person significantly involved in initiating, negotiating, securing, drafting or creating the Contract on behalf of the State is, or becomes at any time while the Contract or an extension of the Contract is in effect, an employee of or a consultant to any other party to this Contract with respect to the subject matter of the Contract. The cancellation shall be effective when the Contractor receives written notice of the cancellation, unless the notice specifies a later time. If the Contractor is a political subdivision of the State, it may also cancel this Contract as provided in A.R.S. § 38-511.

10.2. Gratuities. The State may, by written notice, terminate this Contract, in whole or in part, if the State determines that employment or a Gratuity was offered or made by the Contractor or a representative of the Contractor to any officer or employee of the State for the purpose of influencing the outcome of the procurement, securing the Contract or an Amendment to the Contract, or receiving favorable treatment concerning the Contract, including the making of any determination or decision about Contract performance. The State, in addition to any other rights or remedies, shall be entitled to recover exemplary damages in the amount of three times the value of the Gratuity offered by the Contractor.

10.3. Suspension or Debarment. The State may, by written notice to the Contractor, immediately terminate this Contract if the State determines that the Contractor or its subcontractor has been debarred, suspended or otherwise lawfully prohibited from participating in any public procurement activity, including but not limited to, being disapproved as a subcontractor of any public procurement unit or other governmental body.

10.4. Termination Without Cause.

10.4.1. Both the State and the Contractor may terminate this Contract at any time with thirty (30) days' notice in writing specifying the termination date. Such notices shall be given by personal delivery or by certified mail, return receipt requested.

10.4.2. If the Contractor terminates this Contract, any monies prepaid by the State, for which no service or benefit was received by the State, shall be refunded to the State within 5 days of the termination notice. In addition, if the Contractor terminates the Contract, the Contractor shall indemnify the State for any sanctions imposed by the funding source as a result of the Contractor's failure to complete the Contract.

10.4.3. If the State terminates this Contact pursuant to this Section, the State shall pay the Contractor the Contract price for all Services and Materials completed up to the date of termination. In a fixed price contract, the State shall pay the amount owed for the Services or Materials by multiplying the unit of service or item cost by the number of unpaid service units or items. In a cost reimbursement contract, the ADHS shall pay for any costs that the Contractor can document as having been paid by the Contractor and approved by ADHS. In addition, the Contractor will be paid its reasonable actual costs for work in progress as determined by GAAP up to the date of termination. Upon such termination, the Contractor shall deliver to the ADHS all deliverables completed. ADHS may require Contractor to negotiate the terms of any remaining deliverables still due.

10.5. Mutual Termination. This Contract may be terminated by mutual written agreement of the parties specifying the termination date and the terms for disposition of property and, as necessary, submission of required deliverables and payment therein.

10.6. Termination for Default. The State reserves the right to terminate the Contract in whole or in part due to the failure of the Contractor to comply with any material obligation, term or condition of the Contract, to acquire and maintain all required insurance policies, bonds, licenses and permits, or to make satisfactory progress in performing the Contract. In the event the ADHS terminates the Contract in whole or in part as provided in this paragraph, the ADHS may procure, upon such terms and in such manner as deemed appropriate, Services or Materials, similar to those terminated, and Contractor shall be liable to the ADHS for any excess costs incurred by the ADHS in obtaining such similar Services or Materials.

10.7. Continuation of Performance Through Termination. Upon receipt of the notice of termination and until the effective date of the notice of termination, the Contractor shall perform work consistent with the requirements of the Contract and, if applicable, in accordance with a written transition plan approved by the ADHS. If the Contract is terminated in part, the Contractor shall continue to perform the Contract to the extent not terminated. After receiving the notice of termination, the Contractor shall immediately notify all subcontractors, in writing, to stop work on the effective date of termination, and on the effective date of termination, the Contractor and subcontractors shall stop all work.

10.8. Disposition of Property. Upon termination of this Contract, all property of the State, as defined herein, shall be delivered to the ADHS upon demand.

11. ARBITRATION

Pursuant to A.R.S. § 12-1518, disputes under this Contract shall be resolved through the use of arbitration when the case or lawsuit is subject to mandatory arbitration pursuant to rules adopted under A.R.S. § 12 -133

12. COMMUNICATION

12.1. Program Report. When reports are required by the Contract, the Contractor shall provide them in the format approved by ADHS.

12.2. Information and Coordination. The State will provide information to the Contractor pertaining to activities that affect the Contractor's delivery of services, and the Contractor shall be responsible for coordinating their activities with the State's in such a manner as not to conflict or unnecessarily duplicate the State's activities. As the work of the Contractor progresses, advice and information on matters covered by the Contract shall be made available by the Contractor to the State throughout the effective period of the Contract.

13. CLIENT GRIEVANCES

If applicable, the Contractor and its subcontractors shall use a procedure through which clients may present grievances about the operation of the program that result in the denial, suspension or reduction of services provided pursuant to this Contract and which is acceptable to and approved by the State.

14. SOVEREIGN IMMUNITY

Pursuant to A.R.S. § 41-621(O), the obtaining of insurance by the State shall not be a waiver of any sovereign immunity defense in the event of suit.

15. ADMINISTRATIVE CHANGES

The Procurement Officer, or authorized designee, reserves the right to correct any obvious clerical, typographical or grammatical errors, as well as errors in party contact information (collectively, "Administrative Changes"), prior to or after the final execution of a Contract or Contract Amendment. Administrative Changes subject to permissible corrections include: misspellings, grammar errors, incorrect addresses, incorrect Contract Amendment numbers, pagination and citation errors, mistakes in the labeling of the rate as either extended or unit, and calendar date errors that are illogical due to typographical error. The Procurement Office shall subsequently send to the Contractor notice of corrections to administrative errors in a written confirmation letter with a copy of the corrected Administrative Change attached.

16. SURVIVAL OF TERMS AFTER TERMINATION OR CANCELLATION OF CONTRACT.

All applicable Contract terms shall survive and apply after Contract termination or cancellation to the extent necessary for Contractor to complete and for the ADHS to receive and accept any final deliverables that are due after the date of the termination or cancellation.

17. HEALTH INSURANCE PORTABILITY AND ACCOUNTABILITY ACT OF 1996 (HIPAA).

17.1. The Contractor warrants that it is familiar with the requirements of HIPAA, as amended by the Health Information Technology for Economic and Clinical Health Act (HITECH Act) of 2009, and accompanying regulations and will comply with all applicable HIPAA requirements in the course of this Contract. Contractor warrants that it will cooperate with the Arizona Department of Health Services (ADHS) in the course of performance of the Contract so that both ADHS and Contractor will be in compliance with HIPAA, including cooperation and coordination with the Arizona Department of Administration-Arizona Strategic Enterprise Technology (ADOA-ASET) Office, the ADOA-ASET Arizona State Chief Information Security Officer and HIPAA Coordinator and other compliance officials required by HIPAA and its regulations. Contractor will sign any documents that are reasonably necessary to keep ADHS and Contractor in compliance with HIPAA, including, but not limited to, business associate agreements.

17.2. If requested by the ADHS Procurement Office, Contractor agrees to sign a "Pledge To Protect Confidential Information" and to abide by the statements addressing the creation, use and disclosure of confidential information, including information designated as protected health information and all other confidential or sensitive information as defined in policy. In addition, if requested, Contractor agrees to attend or participate in HIPAA training offered by ADHS or to provide written verification that the Contractor has attended or participated in job related HIPAA training that is: (1) intended to make the Contractor proficient in HIPAA for purposes of performing the services required and (2) presented by a HIPAA Privacy Officer or other person or program knowledgeable and experienced in HIPAA and who has been approved by the ADOA-ASET Arizona State Chief Information Security Officer and HIPAA Coordinator.

18. The Federal Funding Accountability and Transparency Act (FFATA) or Transparency Act - P.L. 109-282, as amended by Section 6202(A) of P.L. 110-252 (https://www.fsrs.gov)

If applicable, the Contractor shall submit to ADHS via email the Grant Reporting Certification Form. This form and the instructions can be downloaded from the ADHS Procurement website at http://azdhs.gov/procurement and returned to the ADHS by the 15th of the month following that in which the award was received. The form shall be completed electronically, and sent to the following email address: ADHS_Grant@azdhs.gov. All required fields must be filled including Top Employee Compensation, if applicable. Completing the Grant Reporting Certification Form is required for compliance with the Office of Management and Budget (OMB), found at http://www.whitehouse.gov/omb/open. Failure to timely submit the Grant Reporting Certification Form could result in the loss of funds. This requirement applies to all subcontractors utilized by the Contractor during the term of the Award.

19. COMMENTS WELCOME

The ADHS Procurement Office periodically reviews the Uniform Terms and Conditions and welcomes any comments you may have. Please submit your comments to: ADHS Procurement Administrator, Arizona Department of Health Services, 1740 West Adams, Suite 303, Phoenix, Arizona, 85007.

20. AUTHORIZATION FOR PROVISION OF SERVICES

Authorization for purchase of services under this Contract shall be made only upon ADHS issuance of a Purchase Order that is signed by an authorized agent. The Purchase Order will indicate the Contract number and the dollar amount of funds authorized. The Contractor shall only be authorized to perform services up to the amount on the Purchase Order. ADHS shall not have any legal obligation to pay for services in excess of the amount indicated on the Purchase Order. No further obligation for payment shall exist on behalf of ADHS unless a) the Purchase Order is changed or modified with an official ADHS Procurement Change Order, and/or b) an additional Purchase Order is issued for purchase of services under this Contract.

1. BACKGROUND

1.1 The Arizona Department of Health Services (ADHS) receives supplemental funding from the Centers for Disease Control and Prevention (CDC) to further develop and enhance the State of Arizona, Bureau of Public Health Emergency Preparedness (PHEP) These funds are used to support development and implementation of Tasks in this Scope of Work The ADHS has determined that the most expeditious methodology to enhance these Tasks is to partner with the County Health Departments

1.2 ADHS continues to look at ways to expand our preparedness capabilities based on our Five-Year Plan and the Capability planning Guide (CPG) data Based on that information and the guidance set forth by the Center for Disease Control (CDC) ADHS has developed, with your input, this PHEP grant agreement

2. OBJECTIVE

Develop plans along with the timetables and necessary activities to fully implement the Contractor's partnership role in response to the CDC capabilities and the programmatic methodology requirements of the Scope of Work

3. SCOPE OF WORK

3.1 The Scope of Work is outlined in the following Provision Four (4) Tasks.

3.2 In addition, the Annual Performance Requirements are outlined in the Attachment A incorporated herein. Attachment A will change every year, as well as the estimated budget for the period of July 1st through June 30th.

3.3 The Contractor shall submit a detailed Budget based upon their estimated cost associated with continuation of the programmatic Annual Performance Requirements through the Contract period, unless terminated, canceled or extended as otherwise provided herein. This Budget shall be submitted in the online Budget Tool format as provided by PHEP. The Contractor shall have the flexibility of making adjustments to the Budget categories of the budgeted amount provided on the approved budget. However, any change shall be requested in writing on the Budget Tool and shall not be implemented until approved electronically by the ADHS. It is the responsibility of the Contractor to coordinate and manage funds under this Contract

3.4. Additional tasks, reporting, deliverables and program information can be found at:

Grant Guidance - Budget Period 5.

Check this link for important program details and possible changes

4. TASKS

The Contractor shall:

4.1. Maintain a person appointed as liaison and PHEP coordinator for this grant funding;

4.2 Maintain a detailed plan for 24/7 response to Public Health Emergencies along the guidelines and deliverables for the current year;

4.3 Maintain a timeline for the development of county-wide plans for Public Health Emergencies, preparedness for a bioterrorism event, infectious disease outbreak, or other public health emergency;

4.4 Maintain a timeline and a plan to identify personnel to be trained, to receive and distribute critical stockpile items and manage a mass distribution of vaccine and/or antibiotics on a twenty-four (24) hours a day, seven (7) days a week basis;

4.5 Maintain a plan to receive and evaluate urgent disease reports from all parts of the jurisdiction on twenty-

four (24) hours a day, seven (7) days a week basis Maintenance of the plan shall include participation in state-wide electronic disease surveillance initiatives;

4 6 Maintain a plan to enhance risk communication and information dissemination to educate the public regarding exposure risks and effective public response;

4 7 Submit an annual Budget based upon the cost reimbursement budgetary guidelines and the Budget Tool provided online at Health Services Portal;

4 8 The Contractor shall submit the completed Budget on or before a date determined annually by the CDC and the ADHS;

4 9 The Contractor shall be advised by correspondence from the ADHS PHEP on the available funding amounts on or before June 30th;

4 10 The funding shall be based on required critical and enhanced capacities for the Contractor's geographical area, and

4 11 Upon receipt of funding communication, the Contractor shall prepare and submit a detailed budget for the period of July 1st through the following June 30th of each Budget year The Contractor shall meet all reporting requirements for federal funding, including those years in which a match requirement is established

5. ANNUAL PERFORMANCE REQUIREMENTS

The Contractor shall:

5 1 Perform the requirements as outlined in the Attachment A, Deliverables

5 2 ADHS recommends attendance at Sponsored Grant Meetings (two (2) events annually):

5 3 Healthcare Coalition Meetings

5 3 1 Recommend participation by the designated preparedness coordinator or representative during HCC meetings (regions listed below) These meetings provide an opportunity for collaboration with healthcare facilities, county, state, tribal, and other response partners

5 3 1 1 Coalitions shall continue to plan, develop, and maintain memorandums of understanding (MOU) to share assets, personnel and information

5 3 1 2 Coalitions shall develop plans to unify ESF-8 management of healthcare during a public health emergency, and integrate communication with jurisdictional command in the area

5 3 2 Regions are defined as follows:

5 3 2 1 AzCHER Northern:

5 3 2 1 1 County Representatives: Apache, Coconino, Navajo, and Yavapai

5 3 2 1 2 Tribal Representatives: Hopi Tribe, Kaibab-Paiute Tribe & Navajo Nation

5 3 2 2 AzCHER Western:

5 3 2 2 1 County Representatives. La Paz, Mohave and Yuma

5 3 2 2 2 Tribal Representatives. Colorado River Indian Tribe & Fort Mojave Indian Tribe, Cocopah Tribe and Fort Yuma Quechan Tribe

5.3.2.3. AzCHER Central:

5.3.2.3.1. County Representatives: Gila, Maricopa and Pinal.

5.3.2.3.2 Tribal Representatives: Gila River Indian Community, San Carlos Apache Tribe and White Mountain Apache Tribe

5.3.2.4 AzCHER Southern:

5.3.2.4.1 County Representatives: Cochise, Graham, Greenlee, Pima, and Santa Cruz.

5.3.2.4.2 Tribal Representatives: Pascua Yaqui Tribe and Tohono O'odham Nation

6. FINANCIAL REQUIREMENTS

6.1 Match Requirement

The PHEP award requires a ten percent (10%) "in-kind" or "soft" match from all the grant participants. Each recipient must include in their budget submission the format they will use to cover the match and method of documentation. Failure to include the match formula will preclude funding

6.2 Inventory

Upon request, the Contractor shall provide an inventory list to ADHS as part of the midyear report. Inventory List shall include all capital equipment (items over $5,000.00 each)

6.3 Budget Allocation and Work Plan

6.3.1 The Contractor shall complete the budget tool provided by ADHS, and return to ADHS for review and approval. Funding will not be released until the budget has been approved by ADHS

6.3.2 All activities and procurements funded through the PHEP grant shall be aligned with the budget/spend plan and work plan. These tools shall help the Contractor reach the goals and objectives outlined in the Capability Deliverables section of this document.

6.4 Grant Activity Oversight

6.4.1 Each PHEP grant recipient shall maintain an appointed Preparedness Coordinator that will be responsible for oversight of all grant related activities. The Coordinator shall be the main point of contact in regard to the grant. The Coordinator shall work closely with ADHS to ensure all deliverables and requirements are met.

6.4.2. Pursuant to, and in compliance with, Standard Operating Procedures for Monitoring, ADHS shall coordinate with the appointed Preparedness Coordinator responsible for oversight of grant act to include compliance with sub-recipient monitoring.

6.5 Failure to meet the performance measures or deliverables may result in withholding from a portion of subsequent awards.

7. EXERCISE Recommendations

7.1 MULTI-YEAR TRAINING AND EXERCISE PLAN (MYTEP) PHEP-HPP capabilities (and grant funded training/exercises)

The Contractor shall:

7.1.1 Participate in the Statewide Training and Exercise Planning Workshop/Webinar

7.1.2. Update and maintain a Multi-Year Training and Exercise Plan, inclusive dates are July 01, 2016 through June 30, 2021. Multi-Year plan shall be provided to ADHS upon request.

7.1.3 Exercise and trainings shall meet implementation criteria and follow evaluation guidance. All grant funded trainings and exercises must be gap based. Gap based indicates an area of a capability to be built, or an area of improvement from a previous exercise/real-world response, address jurisdictional or local risk assessment, or other source (e.g. CPG data) to support achieving operational readiness.

7.2. EXERCISE IMPLEMENTATION CRITERIA

Homeland Security Exercise and Evaluation Program

7.2.1 The Contractor shall, when applicable, conduct preparedness exercises in accordance with the HSEEP fundamentals including:

7.2.1.1 Exercise Design and Development,

7.2.1.2. Exercise Conduct;

7.2.1.3 Exercise Evaluation, and

7.2.1.4 Improvement Planning

7.2.2 More information on the April 2013 HSEEP guidelines and exercise policy is available at https://www.preptoolkit.org/web/hseep-resources.

7.2.3 The Contractor shall assure that provisions and needs of at-risk individuals are included within the design of exercises. The Contractor shall report on the strengths and areas for improvement identified through the coalition based exercise After Action Report and Improvement Plan (AAR/IP). To learn more about the U.S. Department of Health and Human Services' definition of "at-risk" population visit this website. http://www.phe.gov/preparedness/pages/default.aspx

7.2.4 Exemption: A real incident may be substituted for a qualifying coalition based exercise; however the after- action report (AAR) shall document how the HCC members met qualifying criteria (both implementation and evaluation criteria). This scenario will be discussed on an as-requested basis.

7.3. EXERCISE EVALUATION CRITERIA

7.3.1 The Contractor's exercises shall address Capability 3: Emergency Operations Coordination, Capability 6: Information Sharing, and Capability 10: Medical Surge. The exercises shall also address Recovery/Continuity of operations within Capability 2: Healthcare System Recovery.

7.3.2 Qualifying exercises at a minimum shall include the community emergency management partner and/or incident management, the community public health partner and the EMS agency during the design, development, and implementation.

7.3.3 The Contractor shall ensure the functional needs of at-risk individuals are included in response and are identified and addressed in operational plans.

7.3.4 After Action Reports.

7.3.5 After Action Reports shall be submitted to ADHS within sixty (60) days after the exercise.

7.3.6 ADHS Sponsored Events

7.3.7 The Contractor shall participate in ADHS sponsored events throughout BP5 (July 1, 2016 through June 30, 2017)

8. REPORTING DELIVERABLES

Progress on the deliverables, performance measures and activities funded through the PHEP/HPP grant shall be reported in a timely manner to ensure ADHS has adequate time to compile the information and prepare if for submission at the federal level.

8.1 Mid-Year Report (dates covered: July 1 – December 31)

8.1.1 ADHS shall send out the Mid-Year report template in advance of the Due Date

8.1.2 Due Date will be determined additionally.

8.2 ADHS shall provide the Performance Measures templates (if applicable) in advance of the Due Date.

8.3 The Contractor shall provide ADHS with updated Public Health Emergency Contact list on a template provided by ADHS. The list should include contact information for the primary, secondary, and tertiary individuals for the Public Health Incident Management System (e.g. Incident Commander, Operations, etc.) and posted on the HSP.

8.3.1 Due Date: At time of midyear reporting

8.4 End-of-Year Report (dates covered: January 1 – June 30)

8.4.1 ADHS shall send out the End-of-Year report template in advance of the Due Date

8.4.2 Due Date will be determined additionally

8.5 Public Health Emergency Preparedness (PHEP) And Hospital Preparedness Program (HPP)

8.5.1 See Attachment A for deliverable requirements

9. NOTICES, CORRESPONDENCE AND REPORTS

9.1 Notices, Correspondence and Reports from the Contractor to ADHS shall be sent to:

Arizona Department of Health Services
Public Health Emergency Preparedness
Bureau Chief
150 N 18th Avenue Ste 150
Phoenix, AZ 85007

9.2 Notices, Correspondence and Payments from the ADHS to the Contractor shall be sent to:

Gila County Health and Emergency Services
5515 S. Apache Ave, Suite 400
Globe, AZ 85501
Attn: Josh Beck
Phone: 928-402-8805
jbeck@gilacountyaz.gov

PRICE SHEET

Budget Period Five (5)

July 1, 2016 – June 30, 2017

Cost Reimbursement

Description	Quantity	Unit	Amount
CDC Deliverables for Public Health Emergency Preparedness	1	Year	**$186,389.67**

ARF-4232 **Consent Agenda Item 4. B.**

Regular BOS Meeting

Meeting Date: 03/21/2017

Submitted By: Marian Sheppard, Clerk of the Board

Department: Clerk of the Board of Supervisors

Information

Request/Subject

Public Safety Personnel Retirement System Local Board Appointment

Background Information

The Public Safety Personnel Retirement System (PSPRS) Local Board consists of 5 members - 1 member is appointed by the Board of Supervisors (BOS) and is represented as the BOS Chairman; 2 citizens are appointed by the BOS; and 2 members are elected by secret ballot by those local members enrolled in the retirement plan.

At present there are two citizen vacancies. One term of office began on January 1, 2016, through December 31, 2019, and the other term of office began on January 1, 2017, through December 31, 2020.

There is also another vacancy for the term of office which began on January 1, 2017, through December 31, 2020. An election by secret ballot of those local members enrolled in the retirement plan must be held to fill this vacancy.

Evaluation

The Human Resources Department provided notification to the Clerk of the Board that Robert Solberg, a citizen, is willing to serve on this governing board for the term of office that will end on December 31, 2020. The BOS needs to appoint Mr. Solberg to the Local Board.

On December 13, 2016, an election was held by members of the PSPRS and who are employed by Gila County. On February 7, 2017, the election results were presented to the PSPRS Local Board and they were certified as being official. Johnny Holmes was re-elected to the Local Board for the 4-year term of office beginning January 1, 2017, through December 31, 2020. His term of office began on February 7, 2017. A copy of the meeting agenda and draft minutes are attached to this agenda item. Mr. Holmes' previous term of office expired on December 31, 2016; therefore, he is being elected to fill a vacancy that occurred prior to his being re-elected for the 4-year term of office that began on January 1, 2017.

Conclusion

Per statutory requirement and if approved by the members of the BOS, the BOS needs to appoint Mr. Solberg to the PSPRS Local Board. In order to have an accurate record of this Local Board on file, the Board should also "acknowledge" the election of Johnny Holmes to the Local Board.

Recommendation

It is recommended that the Board of Supervisors appoint Robert Solberg to the PSPRS Local Board of Directors for the term of office that expires on December 31, 2020, and acknowledge the election of Johnny Holmes for the term of office that expires on December 31, 2020.

Suggested Motion

Approval to appoint Robert Solberg to the Public Safety Personnel Retirement System (PSPRS) Local Board of Directors for the term beginning on March 21, 2017, through December 31, 2020; and acknowledgment of the election of Johnny Holmes to said Local Board for the term beginning on February 7, 2017, through December 31, 2020.

Attachments

PSPRS Local Board Member List

2-7-17 PSPRS Local Board Meeting Agenda

2-7-17 PSPRS Local Board Draft Minutes

PUBLIC SAFETY PERSONNEL RETIREMENT SYSTEM (PSPRS) LOCAL BOARD OF DIRECTORS

(Proposed to the BOS on 3/21/17)

Name of Member & Appointment Info.[1]	Appointment Designation[2]	Appointment Type[3] & BOS Approval Date	Time Served Prior to Current Appointment	Term of Incumbent (End date must match end date of Term of Office)	Term of Office (Only change when new term cycle begins
Woody Cline (appointed by BOS)	B	A (02/07/17)	-	01/01/17-12/31/20 BOS reviews appointment on a yearly basis.	01/01/17-12/31/20 Coincides with Supervisor's term.
VACANCY-CITIZEN (Personnel Commission Chairman & appointed by BOS)	B	J. Barber's term on the Personnel Commission expired 12/31/16, and he did not want to be reappointed.	H.R. is looking for a candidate to fill this position.	?-12/31/19	01/01/16-12/31/19
Robert Solberg-CITIZEN (appointed by BOS)	B	A (03/21/17)	-	03/21/17-12/31/20	01/01/17-12/31/20
Travis Baxley-MEMBER (elected by Plan members)	C	A (06/21/16)	-	04/18/16-12/31/19	01/01/16-12/31/19
Johnny Holmes-MEMBER (elected by Plan members)	C	A (03/21/17)	3 years, 3 months	02/07/17-12/31/20	01/01/17-12/31/20

[1] Appointment Information:

A. Date of creation: March 1, 1985
B. Established per A.R.S. 38-847
C. PSPRS Local Board is comprised of 5 members: 1 member appointed by BOS and represented as the BOS Chairman; 2 citizens appointed by the BOS of which 1 citizen who shall be the Chairman of the Gila County Personnel Commission; and 2 members elected by secret ballot by members of the PSPRS and who are employed by Gila County and who are "acknowledged:" by the BOS. Board members are appointed for a term of 4 years.
D. Dates of Terms of Office – BOS appoints BOS member and 2 CITIZENS; and Local Board elects by secret ballot 2 MEMBERS, so their start term date begins when the Local Board certifies the election results.

[2] Appointment Designation:

A. Statutory District Appointment: Member must reside within the supervisorial district boundary from which he/she is appointed.
B. Supervisory Appointment: Member unrestricted by district.
C. Joint Appointment: Membership is comprised of appointments from different jurisdictions. Appointments made by other entities are acknowledged by the Board of Supervisors.
D. County at Large: Members are unrestricted by district and can be recommended by appointment by any supervisorial district or by the committee.
E. Alternate Members: As defined by individual committee criteria.

[3] Appointment Type

A. New Appointment
B. Existing vacancy created by (provide name)
C. Reappointment (include number of years/months served prior to most recent appointment in right-hand column)

Gila County Sheriff's Deputy Local Board of the
PUBLIC SAFETY PERSONNEL RETIREMENT SYSTEM (PSPRS)
REVISED MEETING AGENDA

PUBLIC NOTICE

PURSUANT TO A.R.S. §38-431.02, Public Notice is hereby given to the members of the Gila County Public Safety Personnel Retirement System Local Board and to the general public that the Gila County Public Safety Personnel Retirement System (PSPRS) Local Board will hold a meeting open to the public on:

Tuesday, February 7, 2016, at 1:00 p.m.
Gila County Copper Admin Building
Gila County Human Resources Conference Room
1400 E. Ash Street
Globe, AZ 85501

Agenda is as follows:

Call to order and Roll Call

Possible Executive Session: Notice is hereby given that at any time during this meeting the PSPRS Local Board may make a motion to recess into Executive Session to discuss and consult with the attorney of the public body for legal advice and to discuss confidential records pursuant to A.R.S. §38-431.03(A)(2) and/or A.R.S. §38-431.03(A)(3).

1. Swearing in of new Local Board Chairman Woody Cline.
2. Information/Discussion/Action to canvass the results of the election held on December 13, 2016 to elect a member to serve on the PSPRS Local Board, and to declare the election results official
3. Swearing in of new Local Board Member Johnny Holmes.
4. Information/Discussion/Action to review and approve Minutes of meeting held on November 3, 2016.
5. Information/Discussion/Action to make a reemployment determination: Gilbert Olivarez.
6. At any time during this meeting pursuant to A.R.S. §38-431.02(K), members of the PSPRS Local Board may present a brief summary of current events. No action may be taken on issues presented.
7. Adjournment

Pursuant to the Americans with Disabilities Act, the PSPRS Local Board endeavors to ensure the accessibility of its meetings to all persons with disabilities. Should an individual require an accommodation for the meeting, please contact the Human Resources Department at (928) 402-8723. Requests should be made as early as possible to allow time to arrange the accommodations.

This notice posted on the Bulletin Board at the Gila County Courthouse on Monday February 6, 2017.

Gila County Sheriff's Deputy Local Board of the

Public Safety Personnel Retirement System (PSPRS)

Meeting Minutes

Tuesday, February 7, 2017, 1:00 pm

The meeting was called to order at 1:00 p.m. by Local Board Secretary, Shelley McPherson.

Members present were Woody Cline, Chairman; Travis Baxley, Member; Johnny Holmes, Member; and Shelley McPherson, Local Board Secretary.

Also present: Angelo Cutter, Clerical Support.

Agenda items:

Item 1- Swearing in of new Local Board Chairman Woody Cline.

Woody Cline was sworn in by Clerical Support, Angelo Cutter.

Item 2 – Information/Discussion/Action to canvass the results of the election held on December 13, 2016 to elect a member to serve on the PSPRS Local Board and to declare the election results official.

Motion to declare the results of the PSPRS Local Board election held on December 13, 2016 declaring Johnny Holmes the winner was made by Member Travis Baxley. Motion seconded by Chairman Woody Cline. By unanimous vote, motion carried.

Item 3 - Swearing in of new Local Board Member Johnny Holmes.

Johnny Holmes was sworn in by Clerical Support, Angelo Cutter.

Item 4 - Information/Discussion/Action to review and approve Minutes of meeting held on November 3, 2016.

Motion to approve the minutes from the meeting on November 3, 2016 was made by Member Johnny Holmes. Motion seconded by Travis Baxley. By unanimous vote, motion carried.

Item 5 - Information/Discussion/Action to make a reemployment determination: Gilbert Olivarez.

Motion to approve the reemployment of Gilbert Olivarez with an effective date of August 29, 2016 was made by Member Johnny Holmes. Motion seconded by Travis Baxley. By unanimous vote, motion carried.

Item 6– At any time during this meeting pursuant to A.R.S. §38-431.02(K), members of the Gila County Sheriff's Office Public Safety Personnel Retirement System Local Board may present a brief summary of current events

Clerical Support, Angelo Cutter presented items that will need to be addressed by Local Board in the near future.

Item 7– There being no further business before the Board, motion to adjourn meeting was made by Member, Johnny Holmes. Motion was seconded by Member Travis Baxley. By unanimous vote, motion carried.

Meeting was adjourned at 1:13 p.m.

_____

Woody Cline, PSPRS Local Board Chairman

ARF-4133 **Consent Agenda Item 4. C.**

Regular BOS Meeting

Meeting Date: 03/21/2017
Submitted For: Eric Mariscal, Director
Submitted By: Cate Gore, Elections Assistant
Department: Elections Department

Information

Request/Subject

Pleasant Valley Fire District Governing Board Appointment

Background Information

Arizona Revised Statute §48-803 (C) states, *"If a vacancy in the district board occurs due to death or disability or any other cause other than resignation, the board of directors of the district shall appoint a qualified elector of the district to fill the office for the remaining portion of that term. If there is a vacancy in the district board due to resignation, the district board shall accept the resignation and appoint a qualified elector to fill the remaining portion of that term of office. If the district board lacks a quorum for any reason for more than thirty days, the county board of supervisors may revoke the authority of the appointed or elected board of directors pursuant to section 48-1016."*

Evaluation

Pleasant Valley Fire District governing board member Karol Clark tendered her resignation notice effective August 16, 2016. On December 14, 2016, the Pleasant Valley Fire District Board of Directors appointed Peter Elenius to fulfill Mrs. Clark's unexpired term of office, which ends on December 31, 2016. Peter Elenius was reappointed on January 18, 2017, for a four-year term beginning January 18, 2017, through December 31, 2020.

Conclusion

On December 14, 2016, the Pleasant Valley Fire District Board of Directors unanimously voted to appoint Peter Elenius to fulfill Karol Clark's unexpired term of office, which ends on December 31, 2016. On January 18, 2017, Peter Elenius was reappointed for the term ending in December 31, 2020.

Recommendation

The Gila County Elections Department Director recommends that the Board of Supervisors acknowledge Karol Clark's resignation from the Pleasant Valley Fire District Board of Directors and the appointment of Peter Elenius to fulfill Mrs. Clark's term of office beginning December 14, 2016, and ending December 31, 2016, and to acknowledge the reappointment of Peter Elenius' term beginning January 18, 2016, and ending December 31, 2020.

Suggested Motion

Acknowledgment of Karol Clark's resignation from the Pleasant Valley Fire District Board of Directors and the appointment of Peter Elenius to fulfill Mrs. Clark's unexpired term, effective December 14, 2016, through December 31, 2016, and to acknowledge the reappointment of Peter Elenius' term beginning January 18, 2016, and ending December 31, 2020.

Attachments

Arizona Revised Statute 48-1012

Loyaly Oath of Office Peter Elenius

Meeting Minutes 12-14-2016

Meeting Agenda 12-14-2016

Karol Clark Resignation Letter

Meeting Agenda 1-18-2017

Meeting Minutes 1-18-2017

48-1012. Elected board of directors; initial members; qualifications; terms; filling vacancy; chairperson; reorganization; qualifications of electors

A. At the option of the board of supervisors after presentation of a petition requesting the establishment of a domestic water improvement district or a domestic wastewater improvement district, or on the submission of a separate petition following the establishment of an improvement district as prescribed by section 48-903, and subsequent to the approval of the county board of supervisors, the district shall be governed by an elected board of directors. The elected board shall consist of the number of members, not less than three, specified in the petition for establishment of the district. The first directors of such board shall be selected by the board of supervisors at the time the district is established. Members of the board of directors shall be qualified electors of the district and, after the members first appointed by the board of supervisors, shall be elected by the qualified electors of the district.

B. Immediately after the selection and qualification of the first directors of the board, the directors shall meet and divide themselves by lot into two classes as nearly equal in number as possible. Directors of the first class shall serve for a term of four years, and directors of the second class shall serve for a term of two years. Every director shall continue to discharge the duties of office until a successor is appointed and qualifies. Thereafter, at each regular election, one director for each expired term shall be elected and shall hold office for a term of four years, and until a successor is elected and qualifies. The dates of elections and of expiration of terms shall be specified in the petition for establishment of the district.

C. If a vacancy in the district board occurs due to death or disability or any other cause other than resignation, the board of directors of the district shall appoint a qualified elector of the district to fill the office for the remaining portion of that term. If there is a vacancy in the district board due to resignation, the district board shall accept the resignation and appoint a qualified elector to fill the remaining portion of that term of office. If the district board lacks a quorum for any reason for more than thirty days, the county board of supervisors may revoke the authority of the appointed or elected board of directors pursuant to section 48-1016.

D. The board of directors shall annually elect a chairperson from among its members.

E. If only one person files or no person files a nominating petition for election to fill a position on the board of directors of the district, the county board of supervisors, by resolution, may cancel the election for that office and appoint the person who filed the nominating petition to fill that position. If no person files a nominating petition for an election to fill a district board office, the county board of supervisors, by resolution, may cancel the election for those offices and those offices are deemed vacant and shall be filled as otherwise provided by law. A person who is appointed pursuant to this section is fully vested with the powers and duties of the office as if elected to that office.

F. The board of supervisors shall make an order calling an election to decide whether to reorganize a domestic water improvement district that has a board consisting of three members as a domestic water improvement district that has a board consisting of five members when a petition containing the signatures of twenty-five percent of the qualified electors residing within the district and requesting that the district be reorganized is filed with the board except the board of supervisors may not call for a reorganization election to expand the number of directors on the district board more frequently than once every two years. The election may be held on any consolidated election date as prescribed in section 16-204. The domestic water improvement district shall reimburse the county for the expenses of the district election. The board of supervisors shall give notice of the election by posting copies of the order of election in three public places within the district not less than twenty days before the date of the election and if a newspaper is published within the county having a general circulation within the district, the order shall be published in the newspaper

not less than once a week during each of the three calendar weeks preceding the calendar week of the election. The ballot for the election shall state "shall the current three-member domestic water improvement district board be reorganized to a five-member board - yes or no". The ballot shall also allow each elector to indicate the elector's choice for two additional board members in the event of reorganization. Within twenty days after the election, the board of supervisors shall meet and canvass the returns, and if it is determined that a majority of the votes cast at the election were in favor of reorganizing the domestic water improvement district as a district with a five-member board, the board shall enter that fact on its minutes, declare the district duly reorganized and announce the names of those elected to the district board.

G. For the purposes of either a domestic water improvement district or a domestic wastewater improvement district that is organized pursuant to this article and that serves at the time of organization a population of ten thousand persons or less, in addition to any other qualified elector of the district, any natural person who is a qualified elector of this state and who is a real property owner within the district is eligible to vote in a district election without regard to that person's residency and shall be deemed a qualified elector of the district for purposes of service on the board of directors.

©2007 Arizona State Legislature.

privacy statment

Pleasant Valley Fire District

47529 N AZ Highway 288 928-462-3678 Office/Fax
PVFD Operations PO Box 303 928-462-3489 Controlled Burns
District Board PO Box 97
Young, AZ 85554 pvfdadmin@mtecom.net

Serving the Community of Young, Arizona since 1977

PLEASANT VALLEY DISTRICT GOVERNING BOARD MEMBER
OATH OF OFFICE, A.R.S. § 38-231 E

September 16, 2015

State of Arizona, County of Gila, I, PETER ELENIUS do solemnly swear that I will support the Constitution of the United States and the Constitution and laws of the State of Arizona, that I will bear true faith and allegiance to the same and defend them against all enemies, foreign and domestic and that I will faithfully and impartially discharge the duties of the office of District Governing Board Member according to the best of my ability, so help me God.

Member's signature

Note: This Member will replace Karol Clark, as Board Member and the term of office is through November 30, 2020.

STATE OF ARIZONA)
) ss.
County of Gila)

Subscribed and sworn before me by PETER ELENIUS this 14TH day of DEC, 2016.

Notary Public

My commission expires:
12-7-17

CURTIS CORTEZ
Notary Public, State of Arizona
Gila County
My Commission Expires
December 07, 2017

Gary Lollman, Fire Chief

Special Meeting
(Fire Board Work Session)

1. The work session was called to order by Ed Wisdom at 1706
2. *The Pledge of Allegiance was recited by all in attendance.*
3. Roll call and confirmation of a quorum: Ed Wisdom, Ted Tucci, Kathy Hunt, Lynda Murray, Sean Murray.
4. The board reviewed the only application presented for the appointment of a board member. The process was reviewed.
5. Adjournment: Eddie made a motion to adjourn, Ted seconded and the motion carried unanimously. The meeting adjourned at 1730

PLEASANT VALLEY FIRE DISTRICT
RECORDED MINUTES OF BOARD MEETING, December 14, 2016
These recorded minutes will be submitted for approval at the Jan 18, 2016 Board Meeting

1) The meeting was called to order by Eddie Wisdom at 1733 hours
2) Pledge of Allegiance was recited by all in attendance.
3) **Roll call and confirmation of a quorum.** Members present: Eddie Wisdom. Chairman; Kathy Hunt Clerk, Treasurer Ted Tucci, , Lynda Murray, Chief Gary Lollman, Sean Murray, Peter Elenius
4) **Call to the public:** No comments
   The order of the meeting was changed
   a) 7b. Ed Wisdom acknowledged Peter Elenius and interviewed with some of the prepared questions.
   b) 7c. Ed made a motion to appoint Peter Elenius to replace Karol Clark as board member for the term of 2016 to 2020. Kathy seconded and the motion carried unanimously. To follow the directions provided by the County Elections Peter Elenius took the Oath of Office, which was notarized by Curtis Cortez. Ed Wisdom also took the Oath of Office, which was notarized by Curtis Cortez. Peter has reviewed the Open Meeting Law as required and was asked to take his seat at the table for discussion purposes, waiting for next month to vote and reorganize the board positions. All paperwork was signed copied and ready to file and mail to appropriate departments.
5) **Approval of Minutes** –Information/Discussion/Vote
   a) Minutes of November 16, 2016 Regular Meeting-Ted made a motioned to accept the minutes for approval, Ed seconded motion carried unanimously.
6) **Reports and Correspondence:**
   a) **Chief's Report**: See attached
   b) **Admin Report and Correspondence-** See Attached
   c) There was some discussion on automatic deposit, finding it was not cost effective for stipends. Also, there was some minor adjustments to some financial reports that the board was in favor of.
      i) **District Calendar Review-** Prepare for Pension Board Report.
   d) **Treasurer's Report:**
      i) The Treasury Report for Nov 2016 with a County Balance in General Funds of $124,846.55, FY 2016/2017 budget balance $107,288.28. Capital Reserve balance of $36,689.81, Pension Fund balance of $29,986.79 and Grant balance of $5,551.00. Eddie made a motion to accept the Treasury Report, Ted seconded and the motion carried unanimously.
      ii) Nothing new on the legislative report
7) **Business:** Information/Discussion/Vote
   a) There was much discussion on which account the Recovery funds should be placed into. Sean had checked with the department he works with, he presented 3 options, one of which will need to wait until the next budget which adds a line item to put income in so that it can be readily available and if not used rolled over to Capital Reserve. Another option was to put it in Capital Reserve for capital purchases, the third option was to give it back to the taxpayers through a carry over. Kathy asked what kind of plans does operations have to spend the money, the response was training, equipment and upgrading the rescue truck. It was felt that some of these things would not be considered capital expenditures. Ed made a motion to deposit the recovery funds in the Chase Account with a

complete spreadsheet of deposits and expenditures until next year's budget when a line item is created to handle these incomes. Ted seconded and the motion carried unanimously. Ted and Kathy noted that there is $1500 in the account from the budget and that money needs to come back out at some time.

8) **Items for future agendas**-Capital Reserve Policy, Purchasing, ISO review, CON letter (Chief will write), Pension Board Report, Annual Review, FS IGA letter.
9) **Adjournment**: Eddie made a motion to adjourn, Kathy seconded and the vote carried unanimously. The meeting adjourned at 1857

Posted: 12-15-16
Prepared By:
Kathy Hunt
Board Clerk

Notice: Special Meeting
(Fire Board Work Session)
Pleasant Valley Fire Department
December 14, 2016 at 5:00

1. Call to Order
2. Pledge of Allegiance
3. Roll Call
4. Business:
   a. Review applications to prepare for the interviews of potential Board Member appointment.
5. Adjournment

NOTICE: Public Meeting
Pleasant Valley Fire District
December 14, 2016

The Fire Board of the Pleasant Valley Fire District will meet in a Regular Session. The meeting will be held at the Pleasant Valley Fire Station 61, 47531 Arizona Highway 288, at **5:30** (1730 hours) in Young, AZ. The Board may vote to go into Executive Session on any agenda item, pursuant to A.R.S. § 38-431.03 for discussion and consultation for legal advice with the District Attorney on any matter as set forth in the agenda items. The following topics and any variable previously mentioned will be subject to Board consideration, discussion, approval, or other action. All items are set for possible action. The Board reserves the right to consider agenda items other than in the posted sequence.

AGENDA

1) Call to Order
2) Pledge of Allegiance
3) Roll call: Confirmation of a quorum
4) Call to Public
5) Approval of Minutes – Information/Discussion/Vote
   a) Minutes of Regular Meeting, November 16, 2016
6) Reports and Correspondence - Information/Discussion/Vote
   a) Chief's Report-Information/Discussion/Vote
   b) Admin Report and Correspondence-information/discussion/vote
      i) District Calendar review
   c) Treasures Reports:
      i) November report
   d) Legislative report-Ted
7) Business – Information/Discussion/Vote
   a) Have a discussion/vote on which account to put the Recovery money.
   b) Interview candidates for filling a vacated Board Member position
   c) Discuss and vote on the appointee.
8) Agenda item for next board meeting
9) Adjournment

Kathy Hunt

Posted: Monday, December 12, 2016

Prepared by K Hunt,
Clerk/Secretary

Karol Clark, Member of Pleasant Valley Fire Board

August 16, 2016

To: All members of the Pleasant Valley Fire Board.

Please accept this as my resignation as a member of the Fire Board on this date. I will not be seeking re-election either in the upcoming election.

Sincerely,

Karol Clark

NOTICE: Public Meeting
Pleasant Valley Fire District
January 18, 2016

The Fire Board of the Pleasant Valley Fire District will meet in a Regular Session. The meeting will be held at the Pleasant Valley Fire Station 61, 47531 Arizona Highway 288, at **5:30** (1730 hours) in Young, AZ. The Board may vote to go into Executive Session on any agenda item, pursuant to A.R.S. § 38-431.03 for discussion and consultation for legal advice with the District Attorney on any matter as set forth in the agenda items. The following topics and any variable previously mentioned will be subject to Board consideration, discussion, approval, or other action. All items are set for possible action. The Board reserves the right to consider agenda items other than in the posted sequence.

AGENDA

1) Call to Order
2) Pledge of Allegiance
3) Roll call: Confirmation of a quorum
4) Call to Public
5) Approval of Minutes – Information/Discussion/Vote
   a) Minutes of Regular Meeting, December 14, 2016
6) Reports and Correspondence - Information/Discussion/Vote
   a) Chief's Report-Information/Discussion/Vote
   b) Admin Report and Correspondence-information/discussion/vote
      i) District Calendar review
   c) Dispatch Coordinator report
   d) Treasures Reports:
      i) December report
   e) Legislative report-Ted
7) Business – Information/Discussion/Vote
   a) Reinstate Peter Elenius, appointed board member to replace Karol Clark for the January 1, 2017 to December 31, 2020 term.
   b) Re-organize Governing Board positions
   c) Accept Pension Board Report
   d) Review/discuss draft IGA for storing / staging two of our vehicles at the FS facility.
   e) Letter of intent to switch ALS base to Banner Payson Region Medical Center
   f) Capital Reserve Policy
   g) Purchasing Policy
   h) ISO Review
   i) CON Letter
   j) Review and adopt new resolution for medical billing procedures
   k) Approval to initiate an agreement with Aero Med for medical billing
   l) Transferring funds to Capital Reserve.
8) Agenda item for next board meeting
9) Adjournment

Gary Allen
Kathy Hunt
Ed Wisdom
Peter Elenius
Lynda Murray
Gene Murray
Bonnie Halverson
Al Lee

Posted: Friday, January 14, 2016

Prepared by K Hunt,
Clerk/Secretary

PLEASANT VALLEY FIRE DISTRICT

RECORDED MINUTES OF BOARD MEETING, January 18, 2017
These minutes will be submitted for approval at the Feb. 15, 2017 Board Meeting

1) The meeting was called to order by Eddie Wisdom at 17:45
2) Pledge of Allegiance was recited by all in attendance.
3) **Roll call and confirmation of a quorum**. Members present: Eddie Wisdom – Chairman, Kathy Hunt - Clerk, Stan Marshall (by telephone), Peter Elenius, Chief Gary Lollman, Sean Murray, Lynda Murray, Athene Lollman, Bonnie Jo Halverson.
4) **Business:** Information/Discussion/Vote
   a) Reinstate Peter Elenius, appointed board member to replace Karol Clark for the January 1, 2017 to Dec 31, 2020 term. Quorum was established with Eddie, Kathy and Stan. Eddie made a motion to reinstate Peter, Kathy seconded and the motion carried unanimously.
5) **Confirmation of a new quorum.** Stan ended his participation in the meeting. New quorum established by Eddie, Kathy and Peter.
6) **Call to the public:** No comments
7) **Approval of Minutes** – Information/Discussion/Vote
   a) Minutes of Dec. 14, 2016 Regular Meeting - Kathy motioned to accept the minutes for approval, Peter seconded and motion carried unanimously.
8) **Reports and Correspondence:**
   a) **Chief's Report**: See attached. Items to address are listed in Business.
   b) **Admin Report:** See attached. No items to address in Business.
      i) **District Calendar Review –** Budgeting process starts in February.
   c) **Dispatch Coordinators Report:** See attached. No items to address in Business.
   d) **Treasurer's Report:**
      i) The Treasury Report for Dec 2016: County Balance in General Funds of $131,117.05, FY 2016/2017 budget balance $100,055.32. Capital Reserve balance of $36,705.17, Pension Fund balance of $29,968.69 and Building Account (grant) balance of $6,102.25.
9) **Business:** Information/Discussion/Vote (cont.)
   b) Reorganize Governing Board Positions – Kathy made a motion for Eddie to be Chairman, Kathy to be Vice-Chairman, Ted Tucci to be Treasurer, and Peter to be Clerk. Peter seconded and motion carried unanimously.
   c) Accept Pension Board report – Pension Board report was presented by Chief Lohman. Eddie made a motion to accept the report, which was seconded by Peter and motion carried unanimously.
   d) Review/discuss draft IGA for storing/staging two of our vehicles at the FS facility – Chief Lohman presented the draft IGA. Kathy made a motion to accept the draft IGA as written pending the FS Ranger signing, Peter seconded and motion carried unanimously.
   e) Letter of intent to switch ALS base to Banner Payson Region Medical Center – Sean and Bonnie Jo discussed the difficulties in dealing with Cobre Valley Regional Medical Center. Majority of transports are to the Banner system in either Payson or Phoenix metro area. This change will improve the coordination of activities. Kathy made a motion to have a Letter of

Intent signed by Eddie to switch the ALS base to Banner Payson Medical Center. Peter seconded and motion carried unanimously.

f) Capital Reserve Policy – Capital Reserve Policy document was reviewed. Eddie made a motion to accept, Kathy seconded and motion carried unanimously.
g) Purchasing Policy – decision was made to review at February Board meeting
h) ISO Review – review by auditor was postponed until February 10, 2017.
i) CON Letter – A letter of support to the Hellsgate FD to obtain a CON (Certificate of Necessity) to provide required ambulance service to Young was presented by Chief Lohman. Peter made a motion to accept with the addition of a statement on the improved response times, Kathy seconded and motion carried unanimously.
j) Review and adopt new resolution for medical billing procedures – Peter made a motion to adopt with changes that clarify that the resolution is only applicable to non-residents, Kathy seconded and motion carried unanimously.
k) Approval to initiate an agreement with Aero Med for medical billing – Eddie made a motion approve the initiation of an agreement with Aero Med, Kathy seconded and motion carried unanimously.
l) Transferring funds to Capital Reserve – Eddie made a motion to transfer $20,000 from General Funds Account and $1,500 from Building Account to the Capital Reserve account. Kathy seconded and motion passed unanimously.

10) **Items for future agendas**
   a) Stan Marshall's resignation
   b) Purchasing policy
   c) ISO Review

11) **Adjournment**: Eddie made a motion to adjourn, Kathy seconded and the motion carried unanimously. The meeting adjourned at 19:30

ARF-4217 **Consent Agenda Item 4. D.**

Regular BOS Meeting

Meeting Date: 03/21/2017

Reporting Period: Financial and statistical reports for January 2017

Submitted For: Dorothy Little, Justice of the Peace-Payson Region

Submitted By: Dorothy Little, Justice of the Peace-Payson Region

---

Information

Subject

Payson Regional Justice of the Peace's Office Monthly Report for January 2017.

Suggested Motion

Acknowledgement of the January 2017 monthly activity report submitted by the Payson Regional Justice of the Peace's Office.

Attachments

January 2017 report

PAYSON JUSTICE COURT TREASURER'S RECAP

JANUARY, 2017 FUND NAME	AZTEC CODE	ACCOUNT CODE	ACCOUNT CODE	TOTAL AMOUNT ALLOCATED	5% FILL THE GAP SET ASIDE	ADJUSTED BALANCE
Alternative Dispute Resolution	ZADR	0848000-000-000-2061-00	T848-2061	$ 55.06	$ 2.75	$ 52.31
Arson Detection Reward Fund 41-2167D	ZADRF	0901000-000-000-2061-00	T901-2061	$ -	$ -	$ -
Attorney Fee Reimbursement	ZATT	1005000-314-000-3400-11	X10501314004383	$ 81.93		$ 81.93
Confidential Address Assessment - State Treasurer	ZCAA1	0884000-000-000-2061-00		$ -	$ -	$ -
Confidential Address Assessment - Local	ZCAA2	1005000-302-000-3800.30		$ -	$ -	$ -
Citizens Clean Elections	ZCEF	0888000-000-000-2061-00	T888-2061	$ 708.50		$ 708.50
Criminal Justice Enhancement 67%	ZCJEF	0812000-000-000-2061-00	T812-2061	$ 3,329.53	$ 166.48	$ 3,163.05
Defensive Driving Diversion Fee	ZDDS	1005000-314-000-3400-90	X105-4609	$ 4,400.00	$ 220.00	$ 4,180.00
DNA State Surcharge 3% 12-116.01C	ZDNAS	0872000-000-000-2061-00	T872-2061	$ 425.20	$ 21.26	$ 403.94
Elected Officials Retirement Fund 15.30%	ZEORF	0801000-000-000-2061-00	T801-2061	$ 411.96	$ 20.60	$ 391.36
Base Fees (General Fund)	ZFEE	1005000-314-000-3400-15	X105-4615	$ 1,325.08	$ 66.25	$ 1,258.83
Base Fines (General Fund)	ZFINE	1005000-314-000-3510-10	X105-4831	$ 6,632.18	$ 331.61	$ 6,300.57
Fill the Gap Surcharge 7%	ZFTGS	0870000-000-000-2061-00	T870-2061	$ 495.77	$ 24.79	$ 470.98
Failure To Pay Warrant Surcharge 10%	ZFTPS	1005000-314-000-3400-17	X10501314004861	$ 11.22	$ 0.56	$ 10.66
Extra DUI Assessment $500	ZGFDU	0912000-000-000-2061-00	T912-2061	$ 414.51	$ 20.73	$ 393.78
Judicial Collection Enhancement $7	ZJCL	4741000-314-000-3400-15	X36001314004615	$ 419.45		$ 419.45
Judicial Collection Enhancement Local %	ZJCLF	4741000-314-000-3400-15	X36001314004615	$ 183.15	$ 9.16	$ 173.99
Judicial Collection Enhancement $13	ZJCS	0818000-000-000-2061-00	T818-2061	$ 778.98		$ 778.98
Judicial Collection Enhancement %PC	ZJCSF	0840000-000-000-2061-00	T840-2061	$ 419.46	$ 20.97	$ 398.49
Jail (Incarceration) Fees	ZJF	1005000-300-340-3405-40	X10502340004651	$ 138.00		$ 138.00
Local Costs	ZLCL	1005000-314-000-3510-10	X105-4831	$ -	$ -	$ -
Administrative Costs	ZMISC	1005000-314-000-3400-99	X105-4886	$ 589.29	$ 29.46	$ 559.83
Medical Services Enhancement 13%	ZMSEF	0813000-000-000-2061-00	T813-2061	$ 920.87	$ 46.04	$ 874.83
2011 Additional Assessment - State Treasurer	ZOS1	0930000-000-000-2061-00		$ 873.60	$ 43.68	$ 829.92
2011 Additional Assessment - County Treasurer	ZOS2	0931000-000-000-2061-00		$ 109.19	$ 5.46	$ 103.73
Officer Safety Equipment - City Police (CP)	ZOS3	0932000-000-000-2061-00		$ 4.21	$ 0.21	$ 4.00
Officer Safety Equipment - Sheriff (SHF)	ZOS4	0933000-000-000-2061-00		$ 69.89	$ 3.49	$ 66.40
Officer Safety Equipment - DPS (DPS)	ZOS5	0934000-000-000-2061-00		$ 362.02	$ 18.10	$ 343.92
Officer Safety Equipment - MVD/ADOT (MVD)	ZOS6	0935000-000-000-2061-00		$ -	$ -	$ -
Officer Safety Equipment - Game and Fish (GF)	ZOS7	0936000-000-000-2061-00		$ -	$ -	$ -
Officer Safety - Registrar of Contractors (ROC)	ZOS8			$ -	$ -	$ -
Officer Safety Equipment - Animal Control (AC)	ZOS10	0942000-000-000-2061-00		$ -	$ -	$ -
Officer Safety - Tonto Apache Police (TAR)	ZOS15	0950000-000-000-2061-00		$ 0.61	$ 0.03	$ 0.58
Officer Safety - Department of Agriculture	ZOS17	0951000-000-000-2061-00		$ -	$ -	$ -
Overpayment Forfeited	ZOVF	1005000-314-000-3510-10	X105-4831	$ 20.00	$ 1.00	$ 19.00
Adult Probation Fee	ZPBA	4042000-335-000-3405-30	X25001335-4835	$ -	$ -	$ -
Probation Surcharge 2006 ($10.00)	ZPRS6	0871000-000-000-2061-00	T871-2061	$ 2.40	$ 0.12	$ 2.28
Probation Surcharge 2009 ($20.00)	ZPRS9	0871000-000-000-2061-00	T871-2061	$ 2,216.22	$ 110.81	$ 2,105.41
Probation Surcharge $5.00	ZPRSU	0871000-000-000-2061-00	T871-2061	$ 0.08	$ -	$ 0.08
Public Safety Equipment	ZPSEF	0912000-000-000-2061-00	T912-2061	$ 894.00	$ 44.70	$ 849.30
Reimbursement to County Attorney 60%	ZREIM	3544000-301-000-3400-11	X18201301004777	$ 597.65		$ 597.65
Reimbursement to Superior Court 40%	ZREIM	4574000-333-000-3400-16	X226333004864	$ 398.43		$ 398.43
Security Enhancement Fee (Local)	ZSECE			$ -	$ -	$ -
Technical Registration Fund ($15 Drug Offenses)	ZTECH	0833000-000-000-2061-00		$ -	$ -	$ -
Victim Rights Enforcement Fund	ZVREA	0957000-2061-00		$ 214.23	$ 10.71	$ 203.52
Warrant Fee (Local)	ZWAR	1005000-314-000-3510-10	X105-4831	$ -	$ -	$ -
AZ Native Plant Fund	ZANP		STATE	$ -	$ -	$ -
Child Passenger Restraint	ZCPRF		STATE	$ 52.68	$ 2.63	$ 50.05
Drug and Gang Enforcement Fines	ZDECJ		STATE	$ 64.01	$ 3.20	$ 60.81
DUI Abatement	ZDUIA		STATE	$ -	$ -	$ -
Domestic Violence Shelter Fund	ZDVSF		STATE	$ -	$ -	$ -
FARE Special Collection Fee 19%	ZFAR1		STATE	$ 921.48		$ 921.48
FARE Delinquency Fee $35.00	ZFAR2		STATE	$ 818.23		$ 818.23
Game and Fish - Wildlife	ZGF		STATE	$ -	$ -	$ -
HURF 1 28-5438, 2533C	ZHRF1		STATE	$ -	$ -	$ -
HURF 3 28-5433C, 4139	ZHRF3		STATE	$ -	$ -	$ -
HURF - to DPS	ZHRFD		STATE	$ -	$ -	$ -
Prison Construction Fund	ZPCOF		STATE	$ 1,095.01	$ 54.75	$ 1,040.26
Registrar of Contractors	ZRCA		STATE	$ -	$ -	$ -
State Highway Fund	ZSHWY		STATE	$ -	$ -	$ -
State Highway Work Zone Fund	ZSHWZ		STATE	$ -	$ -	$ -
Display Suspended Plates (DPS)	ZSLPD		STATE	$ 278.32	$ 13.92	$ 264.40
State Photo Enforcement Base Fine	ZSPBF		STATE	$ -	$ -	$ -
State Photo Enforcement Clean Election Surcharge	ZSPCE		STATE	$ -	$ -	$ -
Bad Check Program - County Attorney	ZBAD		COUNTY ATTY	$ 50.00		$ 50.00
HURF - to Sheriff's Office 28-5533G	ZHRFS		SHERIFF	$ -	$ -	$ -
Display Suspended Plates (Sheriff's Office)	ZSLPS		SHERIFF	$ 44.74	$ 2.24	$ 42.50
HURF - to City Police	ZHRFC		CITY POLICE	$ -	$ -	$ -
Display Suspended Plates (City Police)	ZSLPC		CITY POLICE	$ 10.05	$ 0.50	$ 9.55
TOTALS				$ 30,837.19	$ 1,296.21	$ 29,540.98
			TOTAL ADJUSTED BALANCE VERIFICATION			$ 29,540.98

DATE	CHECK NO.	AMOUNT	MONTHLY REMITTANCE TO:
2/1/17	5815	$ 27,579.91	GILA COUNTY TREASURER
	5816	$ 3,155.23	ARIZONA STATE TREASURER
	5817	$ 50.00	GILA COUNTY BAD CHECK PROGRAM
	5818	$ 42.50	SHERIFF SUSPENDED PLATES AND HURF
	5819	$ 9.55	T.A.R. POLICE SUSPENDED PLATES AND HURF
		$ 30,837.19	TOTAL DISTRIBUTIONS THIS MONTH

I, DOROTHY A. LITTLE, Gila County Justice of the Peace, do hereby certify this is a true and correct copy of the funds collected by Payson Justice Court for JANUARY, 2017.

DOROTHY A. LITTLE
Gila County Justice of the Peace

LIMITED JURISDICTION COURTS MONTHLY STATISTICAL REPORT

Page 1 Processing

Court ID: 404

County: PAYSON REGIONAL JUSTICE COURT Report Month/Year: January 2017

CRIMINAL TRAFFIC

	D.U.I. (a)	Serious* Violations (b)	All Other Violations (c)	TOTAL (d)
Pending 1st of Month	112	5	145	262
Filed	23	0	35	58
Transferred In	0	0	0	0
SUBTOTAL	135	5	180	320
Transferred Out	0	0	0	0
Other Terminations	13	1	25	39
TOTAL TERMINATIONS	13	1	25	39
Statistical Correction	0	0	0	0
Pending End of Month	122	4	155	281

***A.R.S. 28-661 (if misdemeanor), -662,-663,-664,-665,-693,-708. See Instructions.**

TRAFFIC FAILURE TO APPEAR**

Pending 1st of Month	Filed	Trans In	SUB-TOTAL	Trans Out	Other Term.	TOTAL TERM.	Stat. Corr.	Pending End of Month
234	4	0	238	0	4	4	0	234

****READ:** These are FORMAL FTA FILINGS AND DISPOSITIONS CHARGING ANOTHER CRIMINAL OFFENSE, not bench warrants for failure to appear. FTA filings should also have original traffic complaint recorded in the CRIMINAL TRAFFIC SECTION above until that traffic filing has been terminated. Issuing a bench warrant or an FTA does not terminate the traffic filing.

Criminal Traffic/FTA Court Trials Held: **0** Criminal Traffic/FTA Jury Trials Held: **0**

CIVIL TRAFFIC

Pending 1st of Month	Filed	Trans In	SUB-TOTAL	Trans Out	Default Judg-ment	Other Term.	TOTAL TERM.	Stat. Corr.	Pending End of Month
338	192	0	530	0	13	163	176	0	354

Civil Traffic Hearings Held: **5**

VIOLATIONS OF A.R.S. 28-702.01 AND 28-702.04
(Part of Civil Traffic Above)

Filed **50** Trans In **0** **TOTAL** **50**

LIMITED JURISDICTION COURTS MONTHLY STATISTICAL REPORT

Court ID: 404

Page 2 Processing

County: PAYSON REGIONAL JUSTICE COURT

Report Month/Year: January 2017

MISDEMEANOR

	Pending 1st of Month (a)	Filed (b)	Trans In (c)	SUB TOTAL (d)	Tran Out (e)	Other Term (f)	TOTAL TERM (g)	Stat. Corr. (h)	Pending End of Month (j)
Misdemeanor (Non-Traffic)	484	44	0	**528**	0	48	48	*0*	**480**
Failure to Appear (Non-Traffic)	39	0	0	**39**	0	2	2	*0*	**37**
TOTAL	523	44	0	**567**	0	50	50	0	**517**

TRIALS HELD

Misdemeanor Court/FTA Trials Held: **0**

Misdemeanor/FTA Jury Trials Held: **0**

FELONY

Pending 1st of Month (a)	Filed (b)	Trans In (c)	SUB TOTAL (d)	Trans Out (e)	Other Term (f)	TOTAL TERM (g)	Stat. Corr. (h)	Pending End of Month (j)
40	**19**	**0**	59	**0**	**34**	34	0	**25**

Felony Preliminary Hearings Held: **1**

Felony, Misdemeanor, Criminal Traffic Initial: Appearances: **139**

LOCAL NON-CRIMINAL ORDINANCES

	Pending 1st of Month	Filed	SUB-TOTAL	Terminated	Stat. Corr.	Pending End of Month
Parking	**0**	**0**	0	**0**	0	**0**
Non-Parking	**0**	**0**	0	**0**	0	**0**
TOTAL	0	0	0	0	0	**0**

LIMITED JURISDICTION COURTS MONTHLY STATISTICAL REPORT

Page 3 Processing

Court ID: 404

County: PAYSON REGIONAL JUSTICE COURT Report Month/Year: January 2017

CIVIL COMPLAINTS

	Small Claims (a)	Forcible Detainer/ Eviction Action (b)	Other Civil (c)	TOTAL (d)
Pending 1st of Month	28	2	142	172
Filed	4	8	32	44
Transferred In	0	0	0	0
SUBTOTAL	32	10	174	216
Transferred Out	0	0	0	0
Other Terminations	1	9	26	36
TOTAL TERMINATIONS	1	9	26	36
Statistical Correction	0	0	0	0
Pending End of Month	31	1	148	180

Small Claims Hearings Held/Defaults: 2

Civil Court Trials Held: 8

Small Claims Hearings Held/Defaults Before Volunteer Hearing Officer: 0

Civil Jury Trials Held: 0

DOMESTIC VIOLENCE/HARASSMENT PETITIONS

	Filed	Order Issued	Petition Denied	TOTAL TERM.
Domestic Violence	5	4	1	5
Harassment	11	11	0	11

HEARINGS HELD TO REVOKE OR MODIFY ORDER OF PROTECTION INJUNCTION AGAINST HARASSMENT

Order of Protection: 4

Injunction Against: 1

SPECIAL PROCEEDINGS/ACTIVITIES

Peace Bond Complaints Filed: 0

Fugitive Complaints Filed: 1

Juvenile Hearings Held: 0

Search Warrants Issued: 11

LIMITED JURISDICTION COURTS MONTHLY STATISTICAL REPORT

Page 4 Processing

Court ID: 404

County: PAYSON REGIONAL JUSTICE COURT

Report Month/Year: January 2017

WARRANTS OUTSTANDING

TRAFFIC WARRANTS OUTSTANDING

D.U.I.	**108**
Serious Violations	**3**
All Other Violations	**393**
TRAFFIC TOTAL	**504**

CRIMINAL WARRANTS OUTSTANDING

Felony	**31**
Misdemeanor	**428**
CRIMINAL TOTAL	**459**

MAIL BY THE 20TH WORKING DAY OF MONTH:

Arizona Supreme Court
Administrative Office of the Courts
1501 W. Washington St., Suite 410
Phoenix, AZ 85007-3327

ATTN: Research/Statistics Unit
(602) 542-9376

Signature of the Judge/Magistrate (or designee)

2-17-17
Name of Preparer

Dorothy A. Little
Date of Preparation

Printed: 02/17/17 09:32:07AM

ARF-4233 **Consent Agenda Item 4. E.**

Regular BOS Meeting

Meeting Date: 03/21/2017

Reporting Period: Monthly Report for February 2017

Submitted For: Jesse Bolinger, Justice of the Peace-Globe Region

Submitted By: Mary Navarro, Justice Court Operations Mgr.

Information

Subject

Globe Regional Justice of the Peace's Office monthly report for February 2017.

Suggested Motion

Acknowledgment of the February 2017 monthly activity report submitted by the Globe Regional Justice of the Peace's Office.

Attachments

Monthly Report for February 2017

GLOBE REGIONAL JUSTICE COURT
MONTHLY TRUST REPORT

For the Month of: FEBRUARY, 2017

BONDS

BALANCE AT THE BEGINNING OF THE MONTH	**$ 7,543.05**
RECEIVED DURING THE MONTH	**$ 6,774.27**
DISBURSED DURING THE MONTH	**$ 10,835.39**
BALANCE AT THE END OF THE MONTH	**$ 3,481.93**

Justice of the Peace

Financial Clerk

*Auditor General: Monthly trust report-summarize the courts bond and deposit transactions - although bond and deposit monies remain in the court bonds account, it must be included in financial reports – the report must be filed with the county disbursement and it must indicate beginning balances, deposits, withdrawals and balances due.

February, 2017 FUND NAME	AZTEC CODE	ACCOUNT CODE	ACCOUNT CODE	TOTAL AMOUNT ALLOCATED	5% FILL THE GAP SET ASIDE	ADJUSTED BALANCE
Bulk Merchandise Civil Penalty	ZBULK		STATE	$ -	$ -	$ -
Child Passenger Restraint	ZCPRF		STATE	$ 700.02	$ 35.01	$ 665.01
Drug and Gang Enforcement Fines	ZDECJ		STATE	$ 330.40	$ 16.52	$ 313.88
Domestic Violence Shelter Fund	ZDVSF		STATE	$ 290.00	$ 14.50	$ 275.50
FARE Special Collection Fee 19%	ZFAR1		STATE	$ 5,892.09	$ -	$ 5,892.09
FARE Delinquency Fee $35.00	ZFAR2		STATE	$ 2,598.50	$ -	$ 2,598.50
Game and Fish - Wildlife	ZGF		STATE	$ -	$ -	$ -
Extra DUI Assessment $500	ZGFDU		STATE	$ 3,344.24	$ 167.22	$ 3,177.02
HURF 1 28-5438, 2533C	ZHRF1		STATE	$ -	$ -	$ -
HURF 3 28-5433C, 4139	ZHRF3		STATE	$ -	$ -	$ -
HURF - to DPS	ZHRFD		STATE	$ -	$ -	$ -
Registrar of Contractors	ZRCA		STATE	$ -	$ -	$ -
Display Suspended Plates (DPS)	ZSLPD		STATE	$ 168.31	$ 8.42	$ 159.89
State Photo Enforcement Base Fine	ZSPBF		STATE	$ -	$ -	$ -
State Photo Enforcement Clean Election Surcharge	ZSPCE		STATE	$ -	$ -	$ -
Public Safety Equipment Fund	ZPSEF		STATE	$ 1,477.04	$ 73.86	$ 1,403.18
Alternative Dispute Resolution	ZADR	848-2061	T848-2061	$ 45.20	$ 2.26	$ 42.94
Arson Detection Reward Fund 41-2167D	ZADRF	901-2061	T901-2061	$ 30.12	$ 1.51	$ 28.61
Confidential Address Assessment - State Treasurer	ZCAA1	884-2061		$ 275.50	$ 13.78	$ 261.72
Confidential Address Assessment - Local	ZCAA2	1005-311-3800-30		$ 14.50	$ 0.73	$ 13.77
Citizens Clean Elections	ZCEF	888-2061	T888-2061	$ 1,982.89	$ -	$ 1,982.89
Criminal Justice Enhancement 67%	ZCJEF	812-2061	T812-2061	$ 9,397.93	$ 469.90	$ 8,928.03
Defensive Driving Diversion Fee	ZDDS	1005.311-3510.10	X105-4831	$ 2,700.00	$ 135.00	$ 2,565.00
DNA State Surcharge 3% 12-116.01C	ZDNAS	872-2061	T872-2061	$ 1,140.32	$ 57.02	$ 1,083.30
DUI Abatement	ZDUIA	889-2061	T889-2061	$ -	$ -	$ -
Elected Officials Retirement Fund 15.30%	ZEORF	801-2061	T801-2061	$ 338.16	$ 16.91	$ 321.25
Extra Adult Probation Assessment	ZEXAP	4042.335-3405.30	X25001335-483	$ 9.24	$ 0.47	$ 8.77
Base Fees (General Fund)	ZFEE	1005.311-3400.15	X105-4615	$ 1,065.35	$ 53.27	$ 1,012.08
Forensic Investigation Fund	ZFIF			$ -	$ -	$ -
Base Fines (General Fund)	ZFINE	1005.311-3510.10	X105-4831	$ 20,097.96	$ 1,004.90	$ 19,093.06
Fill the Gap Surcharge 7%	ZFTGS	896-2061	T870-2061	$ 1,384.50	$ 69.23	$ 1,315.27
Failure To Pay Warrant Surcharge 10%	ZFTPS	1005.311.3400.17	X10501311-486	$ 3,401.99	$ 170.10	$ 3,231.89
HURF - to Sheriff's Office 28-5533G	ZHRFS	1005.300-3400.15	X1050234-4615	$ -	$ -	$ -
Judicial Collection Enhancement $7	ZJCL	4740.311-3400.15	X357-4615	$ 681.31	$ -	$ 681.31
Judicial Collection Enhancement Local %	ZJCLF	1005.311-3400.15	X105-4615	$ 150.43	$ -	$ 150.43
Judicial Collection Enhancement $13	ZJCS	840-2061	T840-2061	$ 1,270.99	$ -	$ 1,270.99
Judicial Collection Enhancement %PC	ZJCSF	840-2061	T840-2061	$ 344.25	$ 17.22	$ 327.03
Jail (Incarceration) Fees	ZJF	1005.300-3405.40	X10502442-465	$ 893.12	$ -	$ 893.12
Local Costs	ZLCL1-5	1005.311-3400.10	X105-4450	$ 70.00	$ 3.50	$ 66.50
Cost of Prosecution Reimbursement 60%	ZLCL6	3544.301-3400.11	X182-4620	$ 108.43	$ -	$ 108.43
Cost of Prosecution Reimbursement 40%	ZLCL6	4574.333-3400.16	X22601333-486	$ 72.28	$ -	$ 72.28
County Attorney Bad Check Program	ZLCL7	3545.301-3400.11	X183-4620	$ 198.94	$ 9.95	$ 188.99
Law Enforcement Boating Safety Fund	ZLEAB			$ -	$ -	$ -
Miscellaneous Fees - Local	ZMISC	1005.311-3400.15	X105-4615	$ 266.11	$ 13.31	$ 252.80
Medical Services Enhancement 13%	ZMSEF	813-2061	T813-2061	$ 2,599.49	$ 129.98	$ 2,469.51
2011 Additional Assessment - State Treasurer	ZOS1	930-2061	T930-2061	$ 1,510.28	$ 75.52	$ 1,434.76
2011 Additional Assessment - County Treasurer	ZOS2	931-2061	T931-2061	$ 188.70	$ 9.44	$ 179.26
Officer Safety Equipment - City Police - Globe (CP)	ZOS3	932-2061	T932-2061	$ 77.09	$ 3.86	$ 73.23
Officer Safety Equipment - Sheriff (SHF)	ZOS4	933-2061	T933-2061	$ 40.88	$ 2.05	$ 38.83
Officer Safety Equipment - DPS (DPS)	ZOS5	934-2061	T934-2061	$ 629.05	$ 31.46	$ 597.59
Officer Safety Equipment - MVD/ADOT (MVD)	ZOS6	935-2061	T935-2061	$ -	$ -	$ -
Officer Safety Equipment - Game and Fish (GF)	ZOS7	936-2061	T936-2061	$ -	$ -	$ -
Officer Safety - Registrar of Contractors (ROFC)	ZOS8	937-2061	T937-2061	$ -	$ -	$ -
Officer Safety Equipment-Animal Control	ZOS10	937-2061	T942-2061	$ -	$ -	$ -
Officer Safety Equipment - Globe Fire (FD)	ZOS13	938-2061	T938-2061	$ -	$ -	$ -
Officer Safety Equipment - County Attorney	ZOS14	953-2061	0953-2061	$ 0.42	$ 0.03	$ 0.39
Arizona Department of Insurance (ADOI)	ZOS15	939-2061	T939-2061	$ -	$ -	$ -
Officer Safety Equipment - Miami Police Dept. (MPD)	ZOS16	940-2061	T940-2061	$ 7.69	$ 0.39	$ 7.30
Health and Human Services (HHS)	ZOS17	941-2061	T941-2061	$ -	$ -	$ -
Gila County Animal Control (R)	ZOS18	942-2061	T942-2061	$ -	$ -	$ -
Officer Safety - San Carlos Tribal Police (SCPD)	ZOS19	943-2061	T943-2061	$ -	$ -	$ -
TriCity Fire Department (TRIFI)	ZOS20	944-2061	T944-2061	$ -	$ -	$ -
San Carlos Game and Fish (SCGF)	ZOS23	945-2061	T945-2061	$ -	$ -	$ -
Officer Safety Equip. - Hayden Police Dept. (HPD)	ZOS24	946-2061	T946-2061	$ -	$ -	$ -
Arizona Department of Liquor (ADL)	ZOS25	947-2061	T947-2061	$ -	$ -	$ -
Officer Safety Equipment - Attorney General Office	ZOS26	953-2061		$ -	$ -	$ -
Overpayment Forfeited	ZOVF	1005.311.3510.10	X105-4831	$ 4.02	$ 0.21	$ 3.81
Over Payment Refund	ZOVR			$ -	$ -	$ -
Adult Probation Fee	ZPBA	4042.335-3405.30	X25001335-483	$ 83.20	$ 4.16	$ 79.04
Prison Construction Fund	ZPCOF	908-2061	T908-2061	$ 3,936.22	$ 196.82	$ 3,739.40
Probation Surcharge 2006 ($10.00)	ZPRS6	871-2061	T871-2061	$ 164.40	$ 8.22	$ 156.18
Probation Surcharge 2009 ($20.00)	ZPRS9	871-2061	T871-2061	$ 3,916.67	$ 195.83	$ 3,720.84
Probation Surcharge $5.00	ZPRSU	871-2061	T871-2061	$ 60.11	$ 3.01	$ 57.10
Public Defender Fees	ZPUBZ	1005.345-3300.00	X105-4429	$ 173.65	$ -	$ 173.65
Reimbursement to County Attorney 60%	ZREIM	3544.301.3400.11	X182-4620	$ 2,119.11	$ -	$ 2,119.11
Reimbursement to County Attorney 40%	ZREIM	4574.333.3400.16	X22601333-486	$ 1,412.73	$ -	$ 1,412.73
Security Enhancement Fee	ZSECE			$ -	$ -	$ -
State Highway Fund	ZSHWY			$ -	$ -	$ -
State Highway Work Zone Fund	ZSHWZ	0855-2061	T855-2061	$ -	$ -	$ -
Display Suspended Plates (Sheriff's Office)	ZSLPS	1005.300-3510.10	X105-4264	$ -	$ -	$ -
Technical Registration Fund ($15 Drug Offense)	ZTECH	0883-2061		$ 1.46	$ 0.08	$ 1.38
Victims Assistance Fund	ZVAF	0814-2061	T814-2061	$ -	$ -	$ -
Victim Rights Enforcement Fund	ZVREA	957-2061	T957-2061	$ 341.82	$ 17.10	$ 324.72
Local Warrant Fee	ZWAR			$ -	$ -	$ -
DARE - Sheriff's Office	ZDASO		SHERIFF D.A.R	$ 12.72	$ 0.64	$ 12.08
HURF - to City Police	ZHRFC		CITY POLICE	$ -	$ -	$ -
Display Suspended Plates (Miami Police Dept.)	ZSLMP		CITY POLICE	$ 7.71	$ 0.39	$ 7.32
Display Suspended Plates (City Police)	ZSLPC		CITY POLICE	$ 112.82	$ 5.65	$ 107.17
TOTALS				$ 78,140.36	$ 3,039.43	$ 75,100.93

TOTAL ADJUSTED BALANCE VERIFICATION	$ 75,100.93
TOTAL RESTITUTION RECEIVED	$ 597.05
TOTAL RECEIPTS THIS MONTH	$ 78,737.41

DATE	CHECK NO.	AMOUNT	MONTHLY REMITTANCE TO:
3/6/2017	9439	$ 14,485.07	ARIZONA STATE TREASURER
3/6/2017	9440	$ 63,528.72	GILA COUNTY TREASURER
3/6/2017	9441	$ 12.08	GILA COUNTY SHERIFF D.A.R.E.
3/6/2017	9442	$ 114.49	CITY POLICE SUSPENDED PLATES
		$ 78,140.36	TOTAL DISTRIBUTIONS THIS MONTH

I, Jesse E. Bolinger, Justice of the Peace for the Globe Regional Justice Court, do hereby certify that the foregoing is a true and correct account of funds, to the best of my knowledge and belief, collected by me for the month of February, 2017.

Justice of the Peace

Subscribed and Sworn to before me this _____ day of _____, 2017.

Notary Public

My Commission Expires: _____

ARF-4231 **Consent Agenda Item 4. F.**

Regular BOS Meeting

Meeting Date: 03/21/2017

Reporting Period: Payson Regional Constable's Office Monthly Report for February 2017

Submitted For: Tony McDaniel, Payson Regional Constable

Submitted By: Kimberly Rust, Constable Clerk

Information

Subject

Payson Regional Constable's Office Monthly Report for February 2017.

Suggested Motion

Acknowledgment of the February 2017 monthly activity report submitted by the Payson Regional Constable's Office.

Attachments

February 2017

Terry Phillips
Deputy Constable

Kimberly Rust
Clerk of the Constable

Office of
Payson Regional Constable
Tony McDaniel

FEBRUARY 2017
MONTHLY REPORT

TABLE OF CONTENTS

MONTHLY ACTIVITY LETTER

FEES COLLECTED

CONSTABLE LOG

TREASURER'S RECEIPT

108 WEST MAIN STREET, PAYSON, AZ 85541 – PHONE: (928) 474-3844/FAX: (928) 468-1509

Terry Phillips
Deputy Constable

Kimberly Rust
Clerk of the Constable

Office of
Payson Regional Constable
Tony McDaniel

March 6, 2017

Gila County Board of Supervisors
Gila County Courthouse
1400 East Ash Street
Globe, Arizona 85501

PAYSON REGIONAL CONSTABLE'S OFFICE MONTHLY ACTIVITY LETTER

For the month of **February 2017**, the Payson Regional Constable's Office:

- Received a total of **84** papers for service with a 156 Attempts
- Drove a total of **2432.1** miles
- Collected a total of **$1451.24** as follows:

• Total Deposited	$1451.24
• Less Refunds	($ 31.00)
• Less Writ Fee (4 @ $5.00/each) Collected	($ 20.00)
• Paid to General Fund	$1420.24
• Additional funds from the Town of Payson paid into General Fund for process serving by the Payson Regional Constable	$ 875.00
Grand Total Paid to General Fund	**$2295.24**

Respectfully submitted,

6/8

Tony McDaniel
Payson Regional Constable
Gila County, Payson, Arizona

108 WEST MAIN STREET, PAYSON, AZ 85541 – PHONE: (928) 474-3844/FAX: (928) 468-1509

PAYSON REGIONAL CONSTABLE OFFICE				
FEES COLLECTED				
FEBRUARY 2017				
DATE	RECEIVED FROM	PROCESS NUMBER	AMOUNT	CHECK / MO / CASH
2/6/2017	Michael Coleman	1702PR020	$67.00	Check
2/6/2017	Owens Law Firm	1702PR021	$40.00	Check
2/7/2017	Integrity Attorney	1702PR022	$40.00	Check
2/8/2017	JJL Process	1702PR024	$69.00	Check
2/8/2017	JJL Process	1702PR025	$69.00	Check
2/8/2017	JJL Process	1702PR026	$69.00	Check
2/8/2017	Audrey Holland	1702PR029	$48.00	Check
2/13/2017	Michael/Yvonne Coleman	1702PR038	$76.64	Check
2/15/2017	Owens Law Firm	1702PR046	$48.00	Check
2/15/2017	Country Club Terrace	1702PR047	$69.00	Check
2/15/2017	James Richey	1702PR050	$108.20	Check
2/16/2017	Robert Myers	1702PR055	$48.00	Check
2/21/2017	Linda Conti	1702PR059	$56.00	Cash
2/21/2017	James Richey	1702PR065	$69.20	Cash
2/21/2017	Collins & Copllins	1702PR066	$69.00	Check
2/23/2017	JJL Process	1702PR071	$69.00	Check
2/23/2017	JJL Process	1702PR070	$69.00	Check
2/23/2017	JJL Process	1702PR072	$69.00	Check
2/23/2017	James Richey	1702PR069	$69.20	Check
2/27/2017	Linda Conti	1702PR077	$56.00	Cash
2/27/2017	Protected Information	1702PR078	$40.00	Cash
2/27/2017	JJL Process	1702PR067	$64.00	Check
2/27/2017	JJL Process	1702PR074	$69.00	Check
Collected:			$1,451.24	
Refund:			$31.00	
Total:			$1,420.24	

Constable Activity Log - Monthly

Constable: Tony McDaniel

Deputy: Terry Phillips

County: Gila
Precinct: Payson

Total Cases Served/Attempted: 156

Mileage Total: 2300.50

Date Received	Type of Document	Case No.	Court	Plaintiff	Defendant	Address	Person Served/ Served Via	Date Served	Service	Mileage Start	Mileage End	Daily Mileage	Notes & Served By
1/30/17	Summons	J0404TR2017000187	Payson Justice	State of Arizona	Willie Declay	Willie Declay / 905 S Mclane Rd #25 Payson AZ	None	2/1/17	Attempted			98.70	Attempted McDaniel
1/30/17	Summons	J0404TR2017000187	Payson Justice	State of Arizona	Willie Declay	Willie Declay / 905 S Mclane Rd #25 Payson AZ	Williem Declay / 108 W Main St Payson AZ	2/1/17	Served				Constable Clerk K.Rust
1/31/17	Civil Citation	CE16-161	Payson Magistrate	Town of Payson	Edina Robertson	Edina Robertson / 816 S Running Elk Rd Payson, AZ	Edina Robertson / 816 S Running Elk Rd Payson, AZ	2/1/17	Served				McDaniel
1/31/17	Civil Citation	CE16-077	Payson Magistrate	Town of Payson	Ted Wallace	Ted Wallace / 600 S McLane Rd Payson AZ	None	2/1/17	Attempted				Attempted McDaniel
1/31/17	Civil Citation	CE16-077	Payson Magistrate	Town of Payson	Ted Wallace	Ted Wallace / 600 S McLane Rd Payson AZ	Ted Wallace / 600 S McLane Rd Payson AZ	2/1/17	Served				McDaniel
1/31/17	Letter / Invoices	None	None	Berkshire Hathaway Advantage Realty	Charles Falbo	Charles Falbo / Unknown	None	2/1/17	Attempted				McDaniel
1/31/17	Letter / Invoices	None	None	Berkshire Hathaway Advantage Realty	Charles Falbo	Charles Falbo / Unknown	None	2/1/17	Attempted				McDaniel
1/31/17	Subpoena	2016CR12391	Payson Magistrate	State of Arizona	Jamie Jo Ostlee	Charles Lee Phippeny III / Protected Information	Charles Lee Phippeny III / Protected Information	2/1/17	Served				McDaniel
1/31/17	Criminal Summons	M0444TR2017012064	Payson Magistrate	State of Arizona	Darrell Claiborne	Darrell Claiborne / 513 W Frontier #2 Payson AZ	Darrell Claiborne / 513 W Frontier #2 Payson AZ	2/1/17	Served				McDaniel
1/31/17	Criminal Summons	M0444CR2017012046	Payson Magistrate	State of Arizona	Jay Alvin Fulghum	Jay Alvin Fulghum / 107 E Bonita #21 Payson AZ	Jay Alvin Fulghum / 107 E Bonita #21 Payson AZ	2/1/17	Served				McDaniel
1/31/17	Subpoena	2016CR12295	Payson Magistrate	State of Arizona	Edward Ziegle	Karl Watts / Protected Information	None	2/1/17	Attempted				Attempted McDaniel
1/31/17	Subpoena	2016CR12295	Payson Magistrate	State of Arizona	Edward Ziegle	Karl Watts / Protected Information	Karl Watts / Protected Information	2/1/17	Served				McDaniel
1/30/17	Notice to Appear; Petition	JV2017-00019	Gila County Superior	State of Arizona	Protected Information	Protected Information	Protected Information	2/1/17	Served				McDaniel
1/31/17	Criminal Summons	M0444TR2017012063	Payson Magistrate	State of Arizona	Zachary Tatman	Zachary Tatman / 1005 Matterhorn Rd Payson AZ	None	2/1/17	Attempted				Attempted McDaniel
1/31/17	Criminal Summons	M0444TR2017012063	Payson Magistrate	State of Arizona	Zachary Tatman	Zachary Tatman / 1005 Matterhorn Rd Payson AZ	None	2/1/17	Returned Unserved				McDaniel
1/31/17	Subpoena	2016CR12295	Payson Magistrate	State of Arizona	Edward Ziegle	Elizabeth Barnes / Protected Information	None	2/1/17	Attempted				McDaniel
1/31/17	Subpoena	2016CR12295	Payson Magistrate	State of Arizona	Edward Ziegle	Elizabeth Barnes / Protected Information	None	2/1/17	Attempted				McDaniel
1/31/17	Letter / Invoices	None	None	Berkshire Hathaway Advantage Realty	Charles Falbo	Charles Falbo / Unknown	None	2/1/17	Attempted				McDaniel
1/31/17	Letter / Invoices	None	None	Berkshire Hathaway Advantage Realty	Charles Falbo	Charles Falbo / Unknown	Charles Falbo / 3885 HWY 87 Pine AZ	2/2/17	Served			146.80	McDaniel
2/1/27	Notice to Appear; Petition	JV2017-00023	Gila County Superior	State of Arizona	Protected Information	Protected Information	Protected Information	2/2/17	Served				McDaniel
2/1/17	Notice to Appear; Petition	JV2017-00023	Gila County Superior	State of Arizona	Protected Information	Eduvijes Amaya / 301 W Bonita #7 Payson AZ	Eduvijes Amaya / 301 W Bonita #7 Payson AZ	2/2/17	Served				McDaniel
2/1/17	Notice to Appear; Petition	JV2017-00024	Gila County Superior	State of Arizona	Protected Information	Protected Information	Protected Information	2/2/17	Served				McDaniel
2/1/17	Notice to Appear; Petition	JV2017-00024	Gila County Superior	State of Arizona	Protected Information	Monica Johnson / 1107 S McLane Rd #13 Payson AZ	None	2/2/17	Attempted				Attempted McDaniel
2/1/17	Notice to Appear; Petition	JV2017-00024	Gila County Superior	State of Arizona	Protected Information	Monica Johnson / 1107 S McLane Rd #13 Payson AZ	Monica Johnson / 1107 S McLane Rd #13 Payson AZ	2/2/17	Served				McDaniel
2/1/17	Notice to Appear; Petition	JV2017-00026	Gila County Superior	State of Arizona	Protected Information	Protected Information	Protected Information	2/2/17	Served				McDaniel
2/1/17	Notice to Appear; Petition	JV2017-00026	Gila County Superior	State of Arizona	Protected Information	Stephanie Isit / 8095 W Barranca Rd Payson AZ	Stephanie Isit / 8095 W Barranca Rd Payson AZ	2/2/17	Served				McDaniel
2/1/17	Notice to Appear; Petition	JV2017-00025	Gila County Superior	State of Arizona	Protected Information	Protected Information	None	2/2/17	Attempted				Attempted McDaniel
2/1/17	Notice to Appear; Petition	JV2017-00025	Gila County Superior	State of Arizona	Protected Information	Protected Information	Protected Information	2/2/17	Served				McDaniel
2/1/17	Notice to Appear; Petition	JV2017-00025	Gila County Superior	State of Arizona	Protected Information	Mildred Bell / 1208 N Alpine Heights Dr Payson AZ	None	2/2/17	Attempted				Attempted McDaniel
2/1/17	Notice to Appear; Petition	JV2017-00025	Gila County Superior	State of Arizona	Protected Information	Mildred Bell / 1208 N Alpine Heights Dr Payson AZ	Mildred Bell / 304 S Meadow Payson AZ	2/2/17	Served				McDaniel
2/1/17	Subpoena	J0404TR2016002574	Payson Justice	State of Arizona	Steven Jefferson	Officer Dukuly / 201 N Colcord Payson AZ	ClipBoard / 201 N Colcord Payson AZ	2/2/17	Served				McDaniel

Constable Activity Log - Monthly

Constable: Tony McDaniel

Deputy: Terry Phillips

County: Gila
Precinct: Payson

Total Cases Served/Attempted: 156

Mileage Total: 2300.50

Date Received	Type of Document	Case No.	Court	Plaintiff	Defendant	Address	Person Served/ Served Via	Date Served	Service	Mileage Start	Mileage End	Daily Mileage	Notes & Served By
2/1/17	Subpoena	M0444TR2016012434	Payson Magistrate	State of Arizona	Mona Dutile	Officer Bogatko / 303 N Beeline HWY Payson AZ	Reception / 303 N Beeline HWY Payson AZ	2/2/17	Served				McDaniel
2/1/17	Subpoena	M0444TR2017012033	Payson Magistrate	State of Arizona	Zoie Petrovic	Officer Meza / 303 N Beeline HWY Payson AZ	Reception / 303 N Beeline HWY Payson AZ	2/2/17	Served				McDaniel
2/1/17	Amended Summons	CR2016-599	Gila County Superior	State of Arizona	Steven Brydie	Steven Brydie / 500 N Granite Dr Payson AZ	Steven Brydie / 300 E Aero Dr #4 Payson AZ	2/2/17	Served				McDaniel
2/1/17	Order to Show Cause	2016TR12038	Payson Magistrate	State of Arizona	Landen Johnson	Landen Johnson / 902 N Madison Dr Payson AZ	None	2/2/17	Attempted				Attempted McDaniel
2/1/17	Order to Show Cause	2016TR12038	Payson Magistrate	State of Arizona	Landen Johnson	Landen Johnson / 902 N Madison Dr Payson AZ	None	2/2/17	Attempted				Attempted McDaniel
2/1/17	Order to Show Cause	2016TR12038	Payson Magistrate	State of Arizona	Landen Johnson	Landen Johnson / 902 N Madison Dr Payson AZ	Landen Johnson / 608 W Barnum Cir Payson AZ	2/2/17	Served				McDaniel
2/1/17	Order to Show Cause	2016CR12203	Payson Magistrate	State of Arizona	Landen Johnson	Landen Johnson / 902 N Madison Dr Payson AZ	None	2/2/17	Attempted				Attempted McDaniel
2/1/17	Order to Show Cause	2016CR12203	Payson Magistrate	State of Arizona	Landen Johnson	Landen Johnson / 902 N Madison Dr Payson AZ	None	2/2/17	Attempted				Attempted McDaniel
2/1/17	Order to Show Cause	2016CR12203	Payson Magistrate	State of Arizona	Landen Johnson	Landen Johnson / 902 N Madison Dr Payson AZ	Landen Johnson / 608 W Barnum Cir Payson AZ	2/2/17	Served				McDaniel
1/31/17	Subpoena	2016CR12395	Payson Magistrate	State of Arizona	Bryan Beeler	Joseph Michael Corrigan / 200 E Malibu Dr C-2 Payson AZ	Joseph Michael Corrigan / 108 W Main St Payson AZ	2/2/17	Served				Constable Clerk K. Rust
1/31/17	Subpoena	2016CR12295	Payson Magistrate	State of Arizona	Edward Ziegle	Elizabeth Barnes / Protected Information	None	2/2/17	Attempted				McDaniel
1/31/17	Subpoena	2016CR12295	Payson Magistrate	State of Arizona	Edward Ziegle	Elizabeth Barnes / Protected Information	Elizabeth Barnes / Protected Information	2/2/17	Served				McDaniel
2/2/17	Order of Protection	J0404CV2017000066	Payson Justice	Protected Information	Christopher Davis	Christopher Davis / 600 S Ponderosa #B Payson AZ	None	2/2/17	Attempted				Attempted McDaniel
2/2/17	Order of Protection	J0404CV2017000066	Payson Justice	Protected Information	Christopher Davis	Christopher Davis / 600 S Ponderosa #B Payson AZ	Christopher Davis / 600 S Ponderosa #B Payson AZ	2/2/17	Served				McDaniel
1/31/17	Order of Protection	D0201700034	Gila County Superior	Protected Information	Richard Perkins	Richard Perkins / Homeless	Ricahrd Perkins / 3792 E HWY 260 Payson AZ	2/2/17	Served				McDaniel
2/2/17	Criminal Subpoena	CR2016-186	Gila County Superior	State of Arizona	Patricia Smith AKA Patricia Marie	Deputy Labonte / 108 W Main St Payson AZ	GCSO Clipboard / 108 W Main St Payson AZ	2/2/17	Served				McDaniel
2/2/17	Criminal Subpoena	CR2016-186	Gila County Superior	State of Arizona	Patricia Smith AKA Patricia Marie	Deputy Halenar / 108 W Main St Payson AZ	GCSO Clipboard / 108 W Main St Payson AZ	2/2/17	Served				McDaniel
2/2/17	Criminal Subpoena	CR2016-186	Gila County Superior	State of Arizona	Patricia Smith AKA Patricia Marie	Deputy McGroarty / 108 W Main St Payson AZ	GCSO Clipboard / 108 W Main St Payson AZ	2/2/17	Served				McDaniel
1/31/17	Subpoeana	2016CR12295	Payson Magistrate	State of Arizona	Edward Ziegle	Freedom Grey / Protected Information	None	2/2/17	Attempted				Attempted McDaniel
1/31/17	Subpoeana	2016CR12295	Payson Magistrate	State of Arizona	Edward Ziegle	Freedom Grey / Protected Information	Freedom Grey / Protected Information	2/2/17	Served				McDaniel
2/2/17	Subpoena	J0404TR2017000183	Payson Justice	State of Arizona	Robert Hull	Officer Zickefoose / 201 N Colcord Payson AZ	DPS Clipboard / 201 N Colcord Payson AZ	2/3/17	Served			124.80	McDaniel
1/31/17	Subpoena	2016CR12395	Payson Magistrate	State of Arizona	Bryan Beeler	Lorretta Solitaire / Protected Information	Lorretta Solitaire / Protected Information	2/3/17	Served				McDaniel
1/31/17	Criminal Summons	M0444CR2017012041	Payson Magistrate	State of Arizona	Nicole Reid	Nicole Reid / 1107 S McLane Rd Payson AZ	Nicole Reid / 600 E HWY 260 Payson AZ	2/3/17	Served				McDaniel
2/6/17	5 Day Notice	None	None	Michael Coleman	Mark Gatz	Mark Gatz / 8241 W Louthian Ln Strawbeey AZ	None	2/6/17	Attempted			148.50	Attempted Phillips
2/6/17	5 Day Notice	None	None	Owen Law Firm	Jay & Sandra Hanner	Jay & Sandra Hanner / 101 W Pinon Cir Payson AZ	None	2/6/17	Attempted				Attempted Phillips
2/6/17	5 Day Notice	None	None	Michael Coleman	Mark Gatz	Mark Gatz / 8241 W Louthian Ln Strawbeey AZ	Mark Gatz / 8241 W Louthian Ln Strawbeey AZ	2/7/17	Served				McDaniel
2/6/17	5 Day Notice	None	None	Owen Law Firm	Jay & Sandra Hanner	Jay & Sandra Hanner / 101 W Pinon Cir Payson AZ	Posted & Certified Mailed	2/7/17	Served				McDaniel
2/7/17	Order for Appearance	2014CV010-OV	Payson Justice	Kevin Sutton	Jered White	Bunnie Hatt / 370 Springdale Star Valley 85541	None	2/7/17	Attempted			108.10	Attempted McDaniel
2/7/17	Order for Appearance	2014CV010-OV	Payson Justice	Kevin Sutton	Jered White	Bunnie Hatt / 370 Springdale Star Valley 85541	Bunnie Hatt / 108 W Main St Payson AZ 85541	2/7/17	Served				McDaniel
2/8/17	Order to Show Cause	2016TR1620	Payson Justice	State of Arizona	Brock Nelson	Brock Nelson / 3974 Mistletoe Dr Pine, AZ	None	2/8/17	Attempted			98.50	Attempted McDaniel
2/8/17	Order to Show Cause	2016TR1620	Payson Justice	State of Arizona	Brock Nelson	Brock Nelson / 3974 Mistletoe Dr Pine, AZ	Brock Nelson / 3974 Mistletoe Dr Pine, AZ	2/8/17	Served				McDaniel

Constable Activity Log - Monthly

Constable: Tony McDaniel

Deputy: Terry Phillips

County: Gila
Precinct: Payson

Total Cases Served/Attempted: 156

Mileage Total: 2300.50

Date Received	Type of Document	Case No.	Court	Plaintiff	Defendant	Address	Person Served/ Served Via	Date Served	Service	Mileage Start	Mileage End	Daily Mileage	Notes & Served By
2/8/17	Writ of Garnishment	CV2009207	Gila County Superior	Discover Bank	Wanda & Ernest Wortman	JP Morgan Chase Bank / 201 S Beeline HWY Payson AZ	Antonette Gay / 201 S Beeline HWY Payson AZ	2/8/17	Served				McDaniel
2/8/17	Summons Civil; Complaint	2017CV15-UN	Payson Justice	Midland Funding LLC	Melinda Leigh & J Doe	Melinda Leigh & J Doe / 102 N Lakeshore Rd Payson AZ	Nancy Leigh / 102 N Lakeshore Rd Payson AZ	2/8/17	Served				McDaniel
2/8/17	Summons Civil; Complaint	2017CV16-UN	Payson Justice	Midland Funding LLC	Caitlin Furlong & J Doe	Caitlin Furlong & J Doe / 301 W Saddle Ln Payson AZ	Caitlin Furlong / 301 W Saddle Ln Payson AZ	2/8/17	Served				McDaniel
2/9/17	Divorce Packet	D0201700044	Gila County Superior	Dustin Cozens	Tanya Cozens	Tanya Rae Cozens / 1910 N. Mclane Rd. Payson, AZ.	None	2/9/17	Attempted			106.70	Attempted McDaniel
2/9/17	Divorce Packet	D0201700044	Gila County Superior	Dustin Cozens	Tanya Cozens	Tanya Rae Cozens / 1910 N. Mclane Rd. Payson, AZ.	Tanya Cozens / 804 S Beeline Hwy. Payson, AZ	2/9/17	Served				McDaniel
2/8/17	Residential Eviction Action	2017CV79-FD	Payson Justice	Audrey Holland	Maureen Cahalan	Maureen Cahalan / 710 N Mazatzal Cir Payson, AZ	Robert Glass / 710 N. Mazatzal Cir Payson, AZ	2/9/17	Served				McDaniel
2/9/17	Order to Show Cause	2014CR12269	Payson Magistrate	State of Arizona	Benjamin Tilden	Benjamin Tilden / 300 W. Bonita St. #9 Payson, AZ	None	2/9/17	Attempted				Attempted McDaniel
2/9/17	Order to Show Cause	2014CR12269	Payson Magistrate	State of Arizona	Benjamin Tilden	Benjamin Tilden / 300 W. Bonita St. #9 Payson, AZ	Benjamin Tilden / 115B W. Bonita St. Payson, AZ	2/9/17	Served				McDaniel
2/10/17	Child Custody Packet	DO01500214	Gila County Superior	Aleatha Boucher	Steven Clark	Steven Clark 8250 W. Juniper Place Payson, AZ	Steven Clark 1100 E. South Street Globe AZ	2/10/17	Served			128.50	Mancha
2/10/17	Notice to Appear; Petition	JV2017-027	Gila County Superior	State of Arizona	Protected Information	Protected Information	Protected Information	2/10/17	Served				McDaniel
2/10/17	Criminal Summons	CR2017012062	Payson Magistrate	State of Arizona	Cody Harris	Cody Harris / 9318 W. Gibson Ranch Road Payson AZ	None	2/10/17	Attempted				Attempted McDaniel
2/10/17	Criminal Summons	CR2017012062	Payson Magistrate	State of Arizona	Cody Harris	Cody Harris / 1200 N. Matterhorn Payson AZ	None	2/10/17	Attempted				Attempted McDaniel
2/10/17	Criminal Summons	CR2017012062	Payson Magistrate	State of Arizona	Cody Harris	None phone call from Mom, Cody moved to the Valley	None	2/10/17	Attempted				Attempted McDaniel
2/10/17	Criminal Summons	CR2017012057	Payson Magistrate	State of Arizona	Jessica Parise	Jessica Parise / 808 W. Country Lane Payson AZ	None	2/10/17	Attempted				Attempted McDaniel
2/10/17	Criminal Summons	CR2017012057	Payson Magistrate	State of Arizona	Jessica Parise	Jessica Parise / 808 W. Country Lane Payson AZ	None	2/13/17	Attempted			80.20	Attempted McDaniel
2/13/17	Order to Show Cause	2016TR1641	Payson Regional Court	State of Arizona	Shannon Merritt	Shannon Merritt / 357 Tatum Trail Gisela AZ	Shannon Merritt / 815 S. Beeline Hwy Payson AZ	2/13/17	Served				McDaniel
2/13/17	Subpoena	TR2017000010	Payson Justice Court	State of Arizona	Michael Vancleave	Officer Aldridge / 201 N. Colcord Payson AZ	Clipboard / 201 N. Colcord Payson AZ	2/13/17	Served				McDaniel
2/13/17	Subpoena	TR2017000247	Payson Justice Court	State of Arizona	John Lombard	Officer Zickefoose / 201 N. Colcord Payson AZ	Clipboard / 201 N. Colcord Payson AZ	2/13/17	Served				McDaniel
2/13/17	Subpoena	TR2017000159	Payson Justice Court	State of Arizona	Edgar Parker	Deputy McClure / 108 W. Main Street Payson AZ	Clipboard / 108 W. Main Street Payson AZ	2/13/17	Served				McDaniel
2/13/17	Summons Forcible Detainer	2017CV82 FD	Payson Justice Court	Yvonne & Michael Colman	Mark Gatz	Mark Gatz / 8241 W Louthian Ln Strawbeey AZ	Mark Gatz / 8241 W Louthian Ln Strawbeey AZ	2/13/17	Served				McDaniel
2/14/17			Assisted GCA with service of Subpoena				906 W Sumitt Payson AZ	2/14/17	Served				McDaniel
2/15/17	Summons	M0444CR2017012067	Payson Magistrate	State of Arizona	David Mitchell	David Mitchell / 105 E Main St #201 Payson AZ	David Mitchell / 105 E Main St #201 Payson AZ	2/15/17	Served			114.50	Phillips
2/15/17	Notice Of Abandondment	None	None	Owens Law Firm	Jay & Sandra Hanner	Jay & Sandra Hanner / 101 W Pinon Cir Payson AZ	Posted & Certified Mailed	2/15/17	Served				McDaniel
2/15/17	Summons	M0444CR2017012069	Payson Magistrate	State of Arizona	Timbur Hatch	Timbur Hatch / 132 E Rainbow Dr Star Valley AZ	None	2/15/17	Attempted				Attempted Phillips
2/15/17	Summons	M0444CR2017012069	Payson Magistrate	State of Arizona	Timbur Hatch	Timbur Hatch / 132 E Rainbow Dr Star Valley AZ	None	2/15/17	Unserved				Attempted Phillips
2/15/17	Subpoena	CR2015-472	Gila County Superior	State of Arizona	Matthew Reed Otis	Mindy Jordan / Dr. Michael Lowe's Office	Mindy Jordan / 903 e. Hwy 260 Payson AZ	2/15/17	Served				Mcdaniel
2/15/17	Subpoena	CR201600350	Gila County Superior	State of Arizona	Rudy William Weaver	Officer Justin Beeson /303 N. Beeline Hwy Payson AZ	Clipboard/Reception 303 N. Beeline Hwy Payson AZ	2/15/17	Served				Mcdaniel
2/15/17	Subpoena	CR201600350	Gila County Superior	State of Arizona	Rudy William Weaver	Officer Josh Cadwell /303 N. Beeline Hwy Payson AZ	Clipboard/Reception 303 N. Beeline Hwy Payson AZ	2/15/17	Served				Mcdaniel
2/15/17	Subpoena	CR201600350	Gila County Superior	State of Arizona	Rudy William Weaver	Officer Michael McAnerny /303 N. Beeline Hwy Payson AZ	Clipboard/Reception 303 N. Beeline Hwy Payson AZ	2/15/17	Served				Mcdaniel
2/15/17	Subpoena	CR201500472	Gila County Superior	State of Arizona	Matthew Reed Otis	Deputy Cole Labonte / 108 W. Main Street Payson AZ	GCSO Clipboard / 108 W. Main Street Payson AZ	2/15/17	Served				Mcdaniel
2/15/17	Writ of Restitution	2017CV28-FD	Payson Justice Court	James Richey	David Lyle Matthews/Christopher Lee Kirkingburg	David Lyle Matthews/Christopher Lee Kirkingburg 3584 N. SR87 Pine,AZ	Posted	2/16/17	Served			146.70	Phillips

Constable Activity Log - Monthly

Constable: Tony McDaniel

Deputy: Terry Phillips

County: Gila
Precinct: Payson

Total Cases Served/Attempted: 156

Mileage Total: 2300.50

Date Received	Type of Document	Case No.	Court	Plaintiff	Defendant	Address	Person Served/ Served Via	Date Served	Service	Mileage Start	Mileage End	Daily Mileage	Notes & Served By
2/10/17	Criminal Summons	M0444CR2017012059	Payson Magistrate	State of Arizona	Michael James Kennedy	Michael James Kennedy / 301 S. Bentley St Payson AZ	None	2/10/17	Attempted				Attempted Phillips
2/13/17	Criminal Summons	M0444CR2017012059	Payson Magistrate	State of Arizona	Michael James Kennedy	Phone call	None	2/13/17	Attempted				Attempted McDaniel
2/13/17	Order to Show Cause	2015CR195	Payson Justice Court	State of Arizona	Colleen Lavonne Nichol	Colleen Lavonne Nichol / 9225 W. Fossil Creek Rd. Strawberry, AZ	None	2/14/17	Attempted			64.20	Attempted McDaniel
2/15/17	Order of Protection	P0400D0201700056	Payson Justice Court	Protected Information	Juan Augustine Bustamante	Juan Augustine Bustamante / 190 N. Cornerstone Way Sp.#54 Star Valley, AZ	None	2/15/17	Attempted				Attempted McDaniel
2/15/17	Order of Protection	P0400D0201700056	Payson Justice Court	Protected Information	Juan Augustine Bustamante	Juan Augustine Bustamante / 500 N. Granite Payson, AZ	None	2/15/17	Attempted				Attempted McDaniel
2/13/17	Order to Show Cause	2015CR195	Payson Justice Court	State of Arizona	Colleen Lavonne Nichol	Attempted phone calls.114.511114	None	2/16/17	Attempted				Attempted McDaniel
2/15/17	Order of Protection	P0400D0201700056	Payson Justice Court	Protected Information	Juan Augustine Bustamante	Juan Augustine Bustamante / 190 N. Cornerstone Way Sp.#54 Star Valley, AZ	None	2/16/17	Attempted				Attempted McDaniel
2/15/17	Order of Protection	P0400D0201700056	Payson Justice Court	Protected Information	Juan Augustine Bustamante	Juan Augustine Bustamante / 190 N. Cornerstone Way Sp.#54 Star Valley, AZ	None	2/16/17	Attempted				Attempted Phillips
2/15/17	Writ of Garnishment	CV01-777FD	Flagstaff Justice Court	Country Club Terrace	Clint Joseph Nichols	Uncle Herbs General Store LLC / 200 N. Tonto St Payson AZ	Jason Watson / 200 W. Tonto St. Payson AZ	2/15/17	Served				McDaniel
2/16/17	Residential Eviction Action	2017CV86-FD	Payson Justice Court	Robert Myers	Justin Medina	Justin Medina / 962 W Oxbow Trl #15 Payson AZ	Posted & Certified Mailed	2/16/16	Served				McDaniel
2/17/17	Subpoena	2016TR1622	Payson Justice Court	State of Arizona	David Minard	Officer Garvin / 303 N Beeline HWY Beeline HWY Payson AZ	PPD Reception / 303 N Beeline HWY Payson AZ	2/17/17	Served			149.70	McDaniel
2/17/17	Subpoena	2016TR1622	Payson Justice Court	State of Arizona	David Minard	Officer Varga / 303 N Beeline HWY Payson, AZ	PPD Reception / 303 N Beeline HWY Payson AZ	2/17/17	Served				McDaniel
2/15/17	Order of Protection	P0400D0201700056	Payson Justice Court	Protected Information	Juan Augustine Bustamante	Juan Bustamante 408 E. Eidelweiss Payson AZ	None	2/17/17	Attempted				McDaniel
2/15/17	Order of Protection	P0400D0201700056	Payson Justice Court	Protected Information	Juan Augustine Bustamante	Juan Bustamante 190 Cornerstone Way #23 Payson AZ	None	2/17/17	Attempted				McDaniel
2/21/17	Criminal Summons	M0444CR2017012059	Payson Magistrate	State of Arizona	Michael James Kennedy	Michael James Kennedy / 301 S. Bentley St Payson AZ	None	2/21/17	Attempted			157.50	Attempted McDaniel
2/21/17	Criminal Summons	M0444CR2017012059	Payson Magistrate	State of Arizona	Michael James Kennedy	Michael James Kennedy / 301 S. Bentley St Payson AZ	None	2/21/17	Attempted				Attempted McDaniel
2/21/17	Criminal Summons	M0444CR2017012059	Payson Magistrate	State of Arizona	Michael James Kennedy	Michael James Kennedy / 301 S. Bentley St Payson AZ	Michael James Kennedy / 264 S River Rd Gisela AZ	2/21/17	Served				McDaniel
2/21/17	Child Custody Packet	DO201100087	Gila County Superior	Tiffany Huddlestun	Brandon Conti	Tiffany Huddlestun / 604 E Wade Payson AZ 85541	Tiffany Huddlestun / 604 E Wade Payson AZ 85541	2/21/17	Served				McDaniel
2/21/17	Notice to Appear; Petition	JV201700029	Gila County Superior	State of Arizona	Protected Information	Protected Information	Protected Information	2/21/17	Served				McDaniel
2/21/17	Notice to Appear; Petition	JV201700029	Gila County Superior	State of Arizona	Protected Information	Todd Wheeler / 400 W Longhorn Payson AZ	Todd Wheeler / 400 W Longhorn Payson AZ	2/21/17	Served				McDaniel
2/21/17	Notice to Appear; Petition	JV201700028	Gila County Superior	State of Arizona	Protected Information	Protected Information	Protected Information	2/21/17	Served				McDaniel
2/21/17	Notice to Appear; Petition	JV201700028	Gila County Superior	State of Arizona	Protected Information	Roxanne O'Donald / 300 N Beeline HWY Payson AZ	Roxanne O'Donald / 300 N Beeline HWY Payson AZ	2/21/17	Served				McDaniel
2/21/17	Summons Forcible Detainer	2017CV95FD	Payson Justice Court	James Richey	Ronald Gene Richards	Ronald Gene Richards / 3584 N. Hwy. 87 Sp. #11-B Pine AZ	Posted & Certified Mailed	2/21/17	Served				Phillips
2/21/17	Order of Protection	J404CV2017000088	Payson Regional Court	Protected Information	Kyle Scott Listrom	Kyle Listrom 623 S. Stetson Road Payson AZ	NONE	2/21/17	Attempted				McDaniel
2/21/17	Order of Protection	J404CV2017000088	Payson Regional Court	Protected Information	Kyle Scott Listrom	Kyle Listrom 337 S Valley View Road Payson AZ	NONE	2/21/17	Attempted				McDaniel
2/21/17	Order of Protection	J404CV2017000094	Payson Regional Court	Protected Information	Michael Romo	Michael Romo 305 W. Summit Payson AZ	None	2/21/17	Attempted				McDaniel
2/21/17	Order of Protection	J404CV2017000094	Payson Regional Court	Protected Information	Michael Romo	Michael Romo 313 E. Phoenix St Payson AZ	None	2/21/17	Attempted				McDaniel
2/13/17	Order to Show Cause	2015CR195	Payson Regional Court	State of Arizona	Colleen Lavonne Nichol	Colleen Lavonne Nichol / 9225 W. Fossil Creek Rd. Strawberry, AZ	none	2/21/17	Attempted				Phillips
2/21/17	Notice to Appear; Petition	JV201700028	Gila County Superior	State of Arizona	Roxanne Odonald	Roxanne O'Donald / 623 E. Hunter Cir Payson AZ	None	2/21/17	Attempted				McDaniel
2/21/17	Notice to Appear; Petition	JV201700028	Gila County Superior	State of Arizona	Protected Information	Protected Information	Protected Information	2/21/17	Attempted				McDaniel
2/21/17	Writ of Garnishment	D02008-0435	Maricopa Superior Court	Jade Jeannine Berryman	Joshua Scott Hollenbeck	Ordinary Lifestyles LLC / 207 E. Zurich Dr. Payson AZ	Lifestyles LLC / 207 E. Zurich Dr Payson AZ	2/22/17	Served			330.20	Phillips

Constable Activity Log - Monthly

Constable: Tony McDaniel

Deputy: Terry Phillips

County: Gila
Precinct: Payson

Total Cases Served/Attempted: 156

Mileage Total: 2300.50

Date Received	Type of Document	Case No.	Court	Plaintiff	Defendant	Address	Person Served/ Served Via	Date Served	Service	Mileage Start	Mileage End	Daily Mileage	Notes & Served By
2/22/17	Subpoena	CR201600350	Gila County Superior	State of Arizona	Rudy William Weaver	Lori Sue Purtill / 613 S. St Phillips St. Payson AZ	Lori Purtill 714 S. Beeline Hwy Payson AZ	2/22/17	Served				McDaniel
2/15/17	Order of Protection	P0400D0201700056	Payson Justice Court	Protected Information	Juan Augustine Bustamante	Juan Bustamante / 190 Cornerstone Way #54 Payson AZ	Juan Bustamante 190 Cornerstone Way Payson	2/22/17	Served				McDaniel
2/21/17	Order of Protection	J404CV2017000094	Payson Regional Court	Protected Information	Michael Romo	Michael Romo / 701 W. Saddle Payson AZ	None	2/22/17	Served				McDaniel
2/21/17	Summons and Complaint	2017CV56-UN	Payson Justice Court	Discover Bank	Mark Moppin / John and Jane Doe	Mark A. Moppin / 908 S. Coronado Way Payson, AZ	Mark A. Moppin / 908 S. Coronado Way Payson, AZ	2/23/17	Served				Phillips
2/21/17	Order of Protection	J404CV2017000088	Payson Regional Court	Protected Information	Kyle Scott Listrom	Kyle Listrom / 337 S Valley View Road Payson AZ	Kyle Listrom 236 Buckboard Payson AZ	2/23/17	Served				Phillips
2/23/17	Order of Protection	J404CV2017000098	Payson Regional Court	Protected Information	Michael Romo	Michael Romo 200 W. Corral Dr. Payson AZ	None	2/23/17	Attempted				McDaniel
2/23/17	Residential Eviction Action	2017CV97FD	Payson Regional Court	James Richey	Gerald Moore	Gerald Moore / 3584 N AZ HWY #13 Pine, AZ	Posted & Certified Mailed / 3584 N AZ HWY #13 Pine, AZ	2/23/17	Served				McDaniel
2/23/17	Summons & Complaint	2017CV76-OV	Payson Regional Court	Midland Funding LLC	Megan Reed & J Doe	Megan Reed & J. Doe / 87 E Frontier St Payson, AZ	Megan Reed & J Doe / 87 E Frontier St Payson, AZ	2/24/17	Attempted			161.50	McDaniel
2/23/17	Summons & Complaint	2017CV76-OV	Payson Regional Court	Midland Funding LLC	Megan Reed & J Doe	Megan Reed & J. Doe / 87 E Frontier St Payson, AZ	Megan Reed / 87 E Frontier St Payson, AZ	2/24/17	Served				McDaniel
2/23/17	Summons & Complaint	2017CV61-OV	Payson Regional Court	Midland Funding LLC	David Pearson & J Doe	David Pearson & J Doe Pearson / 300 W Bonita St #7 Payson, AZ	David Pearson & J Doe Pearson / 300 W Bonita St #7 Payson, AZ	2/24/17	Served				McDaniel
2/23/17	Summons & Complaint	2017CV61-OV	Payson Regional Court	Midland Funding LLC	David Pearson & J Doe	David Pearson & J Doe Pearson / 300 W Bonita St #7 Payson, AZ	David Pearson / 300 W Bonita St #7 Payson, AZ	2/24/17	Served				McDaniel
2/23/17	Summons & Complaint	2017CV77UN	Payson Regional Court	LVNV Funding	Shelley Norton	Shelley Norton 703 E Frontier #40 Payson AZ	None	2/24/17	Attempted				McDaniel
2/23/17	Summons & Complaint	2017CV77UN	Payson Regional Court	LVNV Funding	Shelley Norton	Shelley Norton 703 E Frontier #40 Payson AZ	None/Phone calls	2/24/17	Attempted				McDaniel
2/23/17	Summons & Complaint	2017CV77UN	Payson Regional Court	LVNV Funding	Shelley Norton	Shelley Norton 703 E Frontier #40 Payson AZ	Shelley Norton 703 E Frontier #40 Payson AZ	2/24/17	Served				McDaniel
2/23/17	Injunction Against Harassment	J0404CV2017000098	Payson Justice Court	Protected Information	Michael Romo	Michael Romo / 200 W Corral Dr Payson AZ	None	2/23/17	Attempted				Mcdaniel
2/24/17	Child Custody Packet	DO201100087	Gila County Superior	Tiffany Huddlestun	Brandon Conti	Tiffany Huddlestun / 604 E Wade Payson AZ 85541	Tiffany Huddlestun / 252 E HWY 260 Payson AZ 85541	2/27/17	Served			67.00	McDaniel
2/24/17	Injunction Against Harassment	J0404CV2017000098	Payson Justice Court	Protected Information	Michael Romo	Michael Romo / 200 W Corral Dr Payson AZ	Michael Romo / 1005 S Beeline HWY Payson AZ	2/27/17	Served				McDaniel
2/23/17	Notice to Appear; Petition	JV201700041	Gila County Superior	State of Arizona	Protected Information	Protected Information	Protected Information	2/27/17	Served				McDaniel
2/23/17	Notice to Appear; Petition	JV201700041	Gila County Superior	State of Arizona	Protected Information	Angela & Jeremiah Christenson / 119 E Chuckwagon Trl Payson AZ	Micaheline Christenson / 400 E HWY 260 Suite D Payson AZ	2/27/17	Served				McDaniel
2/27/17	Order of Protection	DO201700069	Gila County Superior	Protected Information	Benjamin Wilson	Benjamin Wilson / 1107 S McLane Payson AZ	None	2/27/17	Attempted				McDaniel
2/27/17	Injunction Against Harassment	J0404CV2017000103	Payson Justice Court	Protected Information	Benjamin Wilson	Benjamin Wilson / 1107 S McLane Payson AZ	None	2/27/17	Attempted				McDaniel
2/27/17	Notice and Summons	2017CV62SC	Payson Justice Court	Steven Nirk	Jonathan Fahl	Jonathan Fahl / 708 W Longhorn Rd Payson AZ	Jonathan Fahl / 708 W Longhorn Rd Payson AZ	2/27/17	Served				McDaniel
2/27/17	Child Custody Packet	DO201700070	Gila County Superior	Greg Smith	Jennifer Griffin	Jennifer Griffin / 190 N Cornerstone Way #46 Starvalley AZ	Jennifer Griffin / 190 N Cornerstone Way #46 Starvalley AZ	2/28/17	Served			68.40	McDaniel
2/28/17	Subpoena	J0404TR2016002467	Payson Justice Court	State of Arizona	Michael Murphy	Officer Panuco / 30 Tonto Apache Reservation	Officer Panuco / 30 Tonto Apache Reservation	2/28/17	Served				McDaniel
2/28/17	Subpoena	J0404TR2017000143	Payson Justice Court	State of Arizona	Yordanis Vazquez	Officer Harold / 201 N Colcord Payson AZ	Officer Harold / 201 N Colcord Payson AZ	2/28/17	Served				McDaniel
2/28/17	Subpoena	J040TR2017000054	Payson Justice Court	State of Arizona	Maryanna Norton	Officer Zickefoose / 201 N Colcord Payson AZ	Officer Zickefoose / 201 N Colcord Payson AZ	2/28/17	Served				McDaniel
2/28/17	Subpoena	M0444TR2017012026	Payson Magistrate	State of Arizona	Travis Wills	Officer McAnerny / 303 N Beeline HWY Payson AZ	PPD Reception Desk / 303 N Beeline HWY Payson AZ	2/28/17	Served				McDaniel
2/28/17	Subpoena	M0444TR2017012011	Payson Magistrate	State of Arizona	Peter McCorry	Officer McAnerny / 303 N Beeline HWY Payson AZ	PPD Reception Desk / 303 N Beeline HWY Payson AZ	2/28/17	Served				McDaniel
2/28/17	Subpoena	M0444TR2017012015	Payson Magistrate	State of Arizona	Andrew Timm	Officer Davies / 303 N Beeline HWY Payson AZ	PPD Reception Desk / 303 N Beeline HWY Payson AZ	2/28/17	Served				McDaniel

Constable Activity Log - Monthly

Constable: Tony McDaniel

Deputy: Terry Phillips

County: Gila
Precinct: Payson

Total Cases Served/Attempted: 156

Mileage Total: 2300.50

Date Received	Type of Document	Case No.	Court	Plaintiff	Defendant	Address	Person Served/ Served Via	Date Served	Service	Mileage Start	Mileage End	Daily Mileage	Notes & Served By
2/27/17	Order of Protection	DO201700069	Gila County Superior	Protected Information	Benjamin Wilson	Benjamin Wilson / 1107 S McLane Payson AZ	None	2/28/17	Attempted				McDaniel
2/27/17	Injunction Against Harassment	J0404CV2017000103	Payson Justice Court	Protected Information	Benjamin Wilson	Benjamin Wilson / 1107 S McLane Payson AZ	None	2/28/17	Attempted				McDaniel
12/5/16	Arrest Warrant	J0404CR2016000061	Payson Justice Court	State of Arizona	Billy Leonard	Billy Leonard / 1101 Moonlight Payson AZ	None	2/10/17	Attempted				Phillips
2/8/17	Arrest Warrant	J0404TR2016002231	Payson Justice Court	State of Arizona	Michael Keller	Michael Keller / 903 E Granite Dells Rd #29 Payson AZ	Michael Keller / 903 E Granite Dells Rd #29 Payson AZ	2/8/17	Served				McDaniel

GILA COUNTY TREASURER'S RECEIPT
GILA COUNTY, ARIZONA

DATE 3-1-17

GRANT #

DEPOSIT TO FUND Multiple Funds FUND #

REMITTING DEPT Payson Regional Constable #324

SERVICE RENDERED Service Fees for February 2017

Account Code	Revenue Description	Amount	
T916 2061	CESTB Writ Fee	20	00
1005.324.3405.80	Service Fees		
	cash	201	20
	checks	1230	04
		1451	24

Authorized Signature Kimberly Brust Title Constable Clerk

SUMMARY OF DEPOSIT

Currency	11 @ 20	220 —
Coins		1.20
Checks		1230.04
Total		1451.24

TREASURER By Date 3/2/17

ORIGINATING OFFICE

98454

ARF-4236 **Consent Agenda Item 4. G.**

Regular BOS Meeting

Meeting Date: 03/21/2017

Reporting Period: Globe Regional Constable's Office Monthly Report for February 2017

Submitted For: Ruben Mancha, Globe Regional Constable

Submitted By: Rose Holiday, Constable Clerk

Information

Subject

Globe Regional Constable's Office Monthly Report for February 2017

Suggested Motion

Acknowledgment of the February 2017 monthly departmental activity report submitted by the Globe Regional Constable's Office.

Attachments

February Monthly Report

RUBEN A MANCHA
GLOBE REGIONAL
CONSTABLE

1400 E ASH ST
GLOBE, AZ 85501
928-402-8758

FEBRUARY 2017

MONTHLY REPORT

TABLE OF CONTENTS

MONTHLY ACTIVITY LETTER

FEES COLLECTED

CONSTABLE LOG

TREASURER'S RECEIPT

RUBEN A MANCHA
GLOBE REGIONAL
CONSTABLE

1400 E ASH ST
GLOBE, AZ 85501
928-402-8758

November 15, 2017 (Revised)

Gila County Board of Supervisors
Gila County Courthouse
1400 East Ash Street
Globe, Arizona 85501

GLOBE REGIONAL CONSTABLE'S OFFICE MONTHLY ACTIVITY LETTER

For the month of **February 2017** the Globe Regional Constable's Office:

Received a total of **97** papers for service with **107** Attempts
Drove a total of **706** miles
Warrant Letters Mailed **23**
FTP Monies Collect by Justice Court from Constable
Warrant Letters **$3231.89**
Bailiff for Justice Court **5**

Collected a total of **$879.00** as follows:

• Total Deposited	$697.00
• Less Refunds	($0.00)
• Less Writ Fee (1 @ $5.00/each) Collected	($5.00)
• Paid to General Fund	$694.00

Respectfully submitted,

Ruben Mancha
Globe Regional Constable
Gila County, Globe, Arizona

GLOBE REGIONAL CONSTABLE OFFICE
FEES COLLECTED
FEBRUARY 2017 (Revised)

DATE	RECEIVED FROM	PROCESS NUMBER	AMOUNT
2/1/2017	JJL Process		$64.00
2/2/2017	Karen Scroggins	1702CO002	$56.00
2/2/2017	Desiree Benavidez	1702CO002	$48.00
2/2/2017	Cathy Herring	1702CO014	$56.00
2/6/2017	Maxine Van Meter	1702CO015	$40.00
2/7/2017	Protected Information	1702CO016	$40.00
2/10/2017	Aaron McCarey	1702CO030	$48.00
2/13/2017	Dimpsie Basler	1702CO034	$48.00
2/14/2017	Ernest Robles	1702CO037	$48.00
2/16/2017	John Perlman	1702CO066	$48.00
2/16/2017	Aleatha Boucher	1702CO043	$56.00
2/23/2017	JJL Process	1702CO083	$64.00
2/23/2017	JJL Process	1702CO084	$64.00
2/23/2017	JJL Process	1702CO085	$64.00
2/23/2017	Aaron McCarey	1702CO088	$87.00
2/28/2017	Gonzal Reynoso	1702CO098	$48.00
Collected:			$879.00
Writ Fee:			$5.00
Total:			$874.00

Constable Activity Log - Monthly

Constable: Ruben Mancha

Deputy: Richard Taylor

County: Gila
Precinct: Globe

Total Cases Served/Attempted: 107

Mileage Total: 706

Date Received	Type of Document	Case No.	Court	Plaintiff	Defendant	Address	Person Served/ Served Via	Date Served	Service	Mileage Start	Mileage End	Daily Mileage	Notes & Served By
1/31/17	Summons & Complaint	J0403CV2017000012	Globe Regional Justice	Midland Funding LLC	Cande Valera	Cande Valera / 59 N Hicks Rd Globe AZ	Josh Gutierrez / 59 N Hicks Rd Globe AZ	2/1/17	Served			46	Taylor
1/31/17	Notice to Appear; Petition	JV201700014	Gila County Superior	State of Arizona	Protected Information	Erica Tarango / 469 N Hackney Hill Rd Globe AZ	None	2/1/17	Attempted				Taylor
1/31/17	Notice to Appear; Petition	JV201700013	Gila County Superior	State of Arizona	Protected Information	Meadow Kriley / 329 S East St Globe AZ	None	2/1/17	Attempted				Taylor
1/31/17	Notice to Appear; Petition	JV201700014	Gila County Superior	State of Arizona	Protected Information	Erica Tarango / 469 N Hackney Hill Rd Globe AZ	None	2/2/17	Attempted			55	Taylor
1/31/17	Notice to Appear; Petition	JV201700013	Gila County Superior	State of Arizona	Protected Information	Meadow Kriley / 329 S East St Globe AZ	None	2/2/17	Attempted				Taylor
2/2/17	Order of Protection	J0403CV2017000065	Globe Regional Justice	Protected Information	Wendell Tanner	Wendell Tanner / 1117 E Crestwood Dr Globe AZ	Wendell Tanner / 1100 South St Globe AZ	2/2/17	Served				Mancha
2/2/17	Order of Protection	J0403CV2017000066	Globe Regional Justice	Protected Information	Wendell Tanner	Wendell Tanner / 1117 E Crestwood Dr Globe AZ	Wendell Tanner / 1100 South St Globe AZ	2/2/17	Served				Mancha
2/2/17	Summons Eviction Action	J0403CV2017000064	Globe Regional Justice	Desiree Benavidez	Raymond Earven	Raymond Earven / 5865 S Russell Rd Globe AZ	Raymond Earven / 5865 S Russell Rd Globe AZ	2/3/17	Served			58	Taylor
2/3/17	Summons	J0403CR2017000035	Globe Regional Justice	State of Arizona	David Berumen	David Berumen / 253 S Loomis Ave Miami AZ	None / In Prison	2/3/17	Attempted				Taylor
2/3/17	Summons	J0403CR2017000037	Globe Regional Justice	State of Arizona	Audrey Macias	Audrey Macias / 1101 Lyndsay Dr Globe AZ	Audrey Macias / 1101 Lyndsay Dr Globe AZ	2/3/17	Served				Taylor
1/23/17	Summons	J0403CR2017000028	Globe Regional Justice	State of Arizona	Austin Spurgeon	Austin Spurgeon / 8958 S Six Shooter Canyon # 81 Globe AZ	Austin Spurgeon / 8958 S Six Shooter Canyon # 81 Globe AZ	2/3/17	Served				Taylor
1/31/17	Notice to Appear; Petition	JV201700013	Gila County Superior	State of Arizona	Protected Information	Meadow Kriley / 329 S East St Globe AZ	None	2/3/17	Attempted				Taylor
2/3/17	Summons	J0403TR2017000219	Globe Regional Justice	State of Arizona	Aaron Landa	Aaron Landa / 312 S Hill St Globe AZ	None	2/3/17	Attempted				Taylor
2/3/17	Hearing Order on OP	J0403CV2017000052	Globe Regional Justice	Protected Information	Shanissa Romero	Protected Information	Protected Information	2/3/17	Served				Taylor
1/31/17	Notice to Appear; Petition	JV201700013	Gila County Superior	State of Arizona	Protected Information	Meadow Kriley / 329 S East St Globe AZ	None	2/3/17	Attempted				Taylor
1/31/17	Notice to Appear; Petition	JV201700014	Gila County Superior	State of Arizona	Protected Information	Erica Tarango / 469 N Hackney Hill Rd Globe AZ	None	2/3/17	Attempted				Taylor
1/31/17	Notice to Appear; Petition	JV201700014	Gila County Superior	State of Arizona	Protected Information	Erica Tarango / 469 N Hackney Hill Rd Globe AZ	None	2/3/17	Attempted				Taylor
1/31/17	Notice to Appear; Petition	JV201700014	Gila County Superior	State of Arizona	Protected Information	Erica Tarango / 469 N Hackney Hill Rd Globe AZ	None	2/3/17	Attempted				Taylor
1/31/17	Notice to Appear; Petition	JV201700014	Gila County Superior	State of Arizona	Protected Information	Erica Tarango / 469 N Hackney Hill Rd Globe AZ	Erica Tarango / 469 N Hackney Hill Rd Globe AZ	2/3/17	Served				Taylor
2/3/17	Summons	J0403TR2017000219	Globe Regional Justice	State of Arizona	Aaron Landa	Aaron Landa / 312 S Hill St Globe AZ	None	2/3/17	Attempted				Taylor
2/3/17	Summons	J0403TR2017000219	Globe Regional Justice	State of Arizona	Aaron Landa	Aaron Landa / 339 Broad St St Globe AZ	Aaron Landa / 339 Broad St St Globe AZ	2/3/17	Served				Mancha
2/3/17	Criminal Subpoena	CR2016587	Globe Regional Justice	State of Arizona	Matthew Gohn	Shealee Thompson / Protected Information	Shealee Thompson / Protected Information	2/6/17	Served			46	Taylor
1/31/17	Notice to Appear; Petition	JV201700013	Gila County Superior	State of Arizona	Protected Information	Meadow Kriley / 329 S East St Globe AZ	Meadow Kriley / 329 S East St Globe AZ	2/6/17	Served				Mancha
2/3/17	Criminal Subpoena	CR2016587	Globe Regional Justice	State of Arizona	Matthew Gohn	Deputy White / 1100 South St Globe AZ	A. Goss / 1100 South St Globe AZ	2/6/17	Served				Taylor
2/3/16	Criminal Subpoena	CR2016587	Globe Regional Justice	State of Arizona	Matthew Gohn	Officer Kolton / 175 N Pine St Globe AZ	A. Martinez / 175 N Pine St Globe AZ	2/6/17	Served				Taylor
2/3/17	Criminal Subpoena	CR2016547	Globe Regional Justice	State of Arizona	Tina Goseyun	Officer Haines / 175 N Pine St Globe AZ	A. Martinez / 175 N Pine St Globe AZ	2/6/17	Served				Taylor
2/6/17	Thirty Day Notice	None	None	Maxine Van Meter	Janis Casillas	Janis Casillas / 4450 Copper St Claypool, AZ	Dominique Casillas / 4450 Copper St Claypool	2/6/17	Served				Taylor
2/6/17	Child Custody Packet	DO201300268	Gia County Superior	Cathy Herring	David Herring	David Herring / GCSO Jail 1100 South St Globe AZ	David Herring / GCSO Jail 1100 South St Globe AZ	2/6/17	Served				Taylor
2/7/17	injunction Against Harassment	J0403CV2017000077	Globe Regional Justice	Protected Information	John Mendiola	John Mendiola / 236 S Canyon Ave Miami AZ	John Mendiola / 236 S Canyon Ave Miami AZ	2/7/17	Served			42	Taylor
2/2/17	Divorce Packet	FC2017090247	Maricopa County Superior	Karen Scroggins	Allan Scroggins	Allan Scroggins / 1880 N HWY 60 Globe AZ	None	2/7/17	Attempted				Taylor
2/2/17	Divorce Packet	FC2017090247	Maricopa County Superior	Karen Scroggins	Allan Scroggins	Allan Scroggins / 5880 N Hospital Dr Globe AZ	Allan Scroggins / 5880 N hospital Dr Globe AZ	2/7/17	Served				Taylor

Constable Activity Log - Monthly

Constable: Ruben Mancha

Deputy: Richard Taylor

County: Gila
Precinct: Globe

Total Cases Served/Attempted: 107

Mileage Total: 706

Date Received	Type of Document	Case No.	Court	Plaintiff	Defendant	Address	Person Served/ Served Via	Date Served	Service	Mileage Start	Mileage End	Daily Mileage	Notes & Served By
2/8/17	Criminal Subpoena	CR2016678	Globe Regional Justice	State of Arizona	Bonnie Laborine	Deputy J Valenzuela / 1100 South St Globe AZ	B. Preston / 1177 E Monroe St Globe AZ	2/8/17	Served			42	Taylor
2/8/17	Criminal Subpoena	CR2016678	Globe Regional Justice	State of Arizona	Bonnie Laborine	Tanisha Laborine / Protected Information	None	2/8/17	Attempeted				Taylor
2/8/17	Criminal Subpoena	CR2016678	Globe Regional Justice	State of Arizona	Bonnie Laborine	Tanisha Laborine / Protected Information	Tanisha Laborine / Protected Information	2/8/17	Served				Mancha
2/8/17	Criminal Subpoena	CR2016678	Globe Regional Justice	State of Arizona	Bonnie Laborine	Elora Martinez / Protected Information	None	2/8/17	Attempeted				Taylor
2/8/17	Criminal Subpoena	CR2016703	Globe Regional Justice	State of Arizona	Shawn Williams	Julian Villalobos / Protected Information	None	2/9/17	Attempted			24	Mancha
2/8/17	Summons	J0403CR2017000046	Globe Regional Justice	State of Arizona	Mark Emery	Mark Emery / 153 E Mesquite St Globe AZ	None	2/9/17	Attempted				Taylor
2/8/17	Criminal Subpoena	CR2016703	Globe Regional Justice	State of Arizona	Shawn Williams	Officer Lopez / 1100 South St Globe AZ	B. Preston / 1177 E Monroe St Globe AZ	2/9/17	Served				Taylor
2/8/17	Criminal Subpoena	CR2016703	Globe Regional Justice	State of Arizona	Shawn Williams	Sgt Valenzuela / 1100 South St Globe AZ	B. Preston / 1177 E Monroe St Globe AZ	2/9/17	Served				Taylor
2/8/17	Criminal Subpoena	CR2016703	Globe Regional Justice	State of Arizona	Shawn Williams	DO Teague / 1100 South St Globe AZ	B. Preston / 1177 E Monroe St Globe AZ	2/9/17	Served				Taylor
2/8/17	Criminal Subpoena	CR2016703	Globe Regional Justice	State of Arizona	Shawn Williams	DO Smith / 1100 South St Globe AZ	B. Preston / 1177 E Monroe St Globe AZ	2/9/17	Served				Taylor
2/8/17	Criminal Subpoena	CR2016703	Globe Regional Justice	State of Arizona	Shawn Williams	DO Gonzales / 1100 South St Globe AZ	B. Preston / 1177 E Monroe St Globe AZ	2/9/17	Served				Taylor
2/8/17	Criminal Subpoena	CR2016703	Globe Regional Justice	State of Arizona	Shawn Williams	DO Buchanan / 1100 South St Globe AZ	B. Preston / 1177 E Monroe St Globe AZ	2/9/17	Served				Taylor
2/8/17	Criminal Subpoena	CR20161860	Globe Regional Justice	State of Arizona	Jeffrey Courtney	Officer Kjellstrom / 175 N Pine St Globe AZ	M. Ramos / 175 N Pine St Globe AZ	2/9/17	Served				Taylor
2/10/17	Summons Eviction Action	J0403CV2017000081	Globe Regional Justice	Aaron McCarey	Phillip Peru Jr	Phillip Peru Jr / 953 S Linda Vista Dr Globe AZ	Posted & Certified Mailed / 953 S Linda Vista Dr Globe AZ	2/10/17	Served			43	Taylor
2/10/17	Summons	M0444CR2017012063	Payson Magistrate	State of Arizona	Tyler Santo	Tyler Santo / GCSO Jail 1100 South St Globe AZ	Tyler Santo / GCSO Jail 1100 South St Globe AZ	2/10/17	Served				Taylor
2/13/17	Notice to Appear; Petition	JV201700031	Gila County Superior	State of Arizona	Protected Information	Protected Information	Protected Information	2/13/17	Served			24	Taylor
2/13/17	Summons Eviction Action	J0403CV2017000082	Globe Regional Justice	Dempsie Basler Jr	Anthony Martinez	Anthony Martinez / 797 E Prickly Pear #4 Globe AZ	Anthony Martinez / 797 E Prickly Pear #4 Globe AZ	2/13/17	Served				Mancha
2/13/17	Notice to Appear; Petition	JV201700031	Gila County Superior	State of Arizona	Protected Information	Jackie Brewer / 437 W Tremont St Globe AZ	None	2/13/17	Attempted				Taylor
2/14/14	Summons Eviction Action	J0403CV2017000086	Globe Regional Justice	Ernest Robles	Amador Gonzales	Amador Gonzales / 496 E Kline St Globe AZ	Amador Gonzales / 496 E Kline St Globe AZ	2/14/17	Served			28	Taylor
2/13/17	Notice to Appear; Petition	JV201700031	Gila County Superior	State of Arizona	Protected Information	Jackie Brewer / 437 W Tremont St Globe AZ	Jackie Brewer / 437 W Tremont St Globe AZ	2/15/17	Served			24	Taylor
2/15/17	Criminal Subpoena	CR2016730	Globe Regional Justice	State of Arizona	Paul Paschall	Deputy Valenzuela / 1100 South St Globe AZ	B. Preston / 1177 E Monroe St Globe AZ	2/15/17	Served				Taylor
2/15/17	Criminal Subpoena	CR2016702	Globe Regional Justice	State of Arizona	Lesly Nielsen	Deputy Valenzuela / 1100 South St Globe AZ	B. Preston / 1177 E Monroe St Globe AZ	2/15/17	Served				Taylor
2/15/17	Criminal Subpoena	CR2016702	Globe Regional Justice	State of Arizona	Lesly Nielsen	Deputy Folau / 1100 South St Globe AZ	B. Preston / 1177 E Monroe St Globe AZ	2/15/17	Served				Taylor
2/15/17	Criminal Subpoena	CR2016708	Globe Regional Justice	State of Arizona	Benedict Tellez	Officer Guerrero / 175 N Pine St Globe AZ	M. Ramos / 175 N Pine St Globe AZ	2/15/17	Served				Taylor
2/15/17	Criminal Subpoena	CR2016522	Globe Regional Justice	State of Arizona	Larry Porter	Officer Kjellstrom / 175 N Pine St Globe AZ	M. Ramos / 175 N Pine St Globe AZ	2/15/17	Served				Taylor
2/15/17	Criminal Subpoena	CR2016730	Globe Regional Justice	State of Arizona	Paul Paschall	Officer Shaw / 740 W Sullivan St Miami AZ	J. Valenzuela / 740 W Sullivan St Miami AZ	2/15/17	Served				Taylor
2/15/17	Criminal Subpoena	TR20161408	Globe Regional Justice	State of Arizona	Oscar Valencia	Officer Woodliff / 740 W Sullivan St Miami AZ	J. Valenzuela / 740 W Sullivan St Miami AZ	2/15/17	Served				Taylor
2/15/17	Criminal Subpoena	CR2016698	Globe Regional Justice	State of Arizona	Larry Paschall	Officer Woodliff / 740 W Sullivan St Miami AZ	J. Valenzuela / 740 W Sullivan St Miami AZ	2/15/17	Served				Taylor
2/15/17	Criminal Subpoena	CR2016702	Globe Regional Justice	State of Arizona	Lesly Nielsen	Joseph Delara Jr / Protected Information	None	2/15/17	Attempted				Taylor
2/15/17	Criminal Subpoena	CR2016702	Globe Regional Justice	State of Arizona	Lesly Nielsen	Jennifer Gabler-Provencio / Protected Information	None	2/15/17	Attempted				Taylor
2/15/17	Criminal Subpoena	CR2016702	Globe Regional Justice	State of Arizona	Lesly Nielsen	Andrew Davila / Protected Information	None	2/15/17	Attempted				Taylor

Constable Activity Log - Monthly

Constable: Ruben Mancha

Deputy: Richard Taylor

County: Gila
Precinct: Globe

Total Cases Served/Attempted: 107

Mileage Total: 706

Date Received	Type of Document	Case No.	Court	Plaintiff	Defendant	Address	Person Served/ Served Via	Date Served	Service	Mileage Start	Mileage End	Daily Mileage	Notes & Served By
2/14/17	Criminal Subpoena	CR2016522	Globe Regional Justice	State of Arizona	Larry Porter	Annette Shayne / Protected Information	Annette Shayne / Protected Information	2/15/17	Served				Taylor
2/14/17	Criminal Subpoena	CR2016698	Globe Regional Justice	State of Arizona	Larry Paschall	Pearl Powell / Protected Information	None	2/15/17	Attempted				Taylor
2/14/17	Criminal Subpoena	CR2016730	Globe Regional Justice	State of Arizona	Paul Paschall	Pearl Powell / Protected Information	None	2/15/17	Attempted				Taylor
2/15/17	Criminal Subpoena	CR2016708	Globe Regional Justice	State of Arizona	Benedict Tellez	Angelica Salcido / Protected Information	None	2/16/17	Attempted			26	Taylor
2/15/17	Criminal Subpoena	CR2016708	Globe Regional Justice	State of Arizona	Benedict Tellez	Edward Brown Jr / Protected Information	None	2/16/17	Attempted				Taylor
2/15/17	Criminal Subpoena	CR2016522	Globe Regional Justice	State of Arizona	Larry Porter	Patricia Gonzales / Protected Information	None	2/16/17	Attempted				Mancha
2/15/17	Criminal Subpoena	CR2016702	Globe Regional Justice	State of Arizona	Lesly Nielsen	Jennifer Gabler-Provencio / Protected Information	None	2/16/17	Attempted				Mancha
2/15/17	Criminal Subpoena	CR2016702	Globe Regional Justice	State of Arizona	Lesly Nielsen	Jennifer Gabler-Provencio / Protected Information	Jennifer Gabler-Provencio / Protected Information	2/16/17	Served				Taylor
2/16/17	Summons	J0403CR2017000064	Globe Regional Justice	State of Arizona	Joshua Gutierrez	Joshua Gutierrez / 850 S Highland Dr Globe AZ	Joshua Gutierrez / 59 N Hicks Rd Globe AZ	2/16/17	Served				Taylor
2/15/17	Criminal Subpoena	CR2016522	Globe Regional Justice	State of Arizona	Larry Porter	Patricia Gonzales / Protected Information	Patricia Gonzales / Protected Information	2/16/17	Served				Mancha
2/14/17	Criminal Subpoena	CR2016698	Globe Regional Justice	State of Arizona	Larry Paschall	Pearl Powell / Protected Information	None	2/16/17	Attempted				Mancha
2/14/17	Criminal Subpoena	CR2016522	Globe Regional Justice	State of Arizona	Larry Porter	Jim Woodard / Protected Information	Jim Woodard / Protected Information	2/16/17	Served				Taylor
2/14/17	Criminal Subpoena	CR2016730	Globe Regional Justice	State of Arizona	Paul Paschall	Pearl Powell / Protected Information	None	2/16/17	Attempted				Mancha
2/15/17	Criminal Subpoena	CR2016708	Globe Regional Justice	State of Arizona	Benedict Tellez	Angelica Salcido / Protected Information	Angelica Salcido / Protected Information	2/17/17	Served			23	Taylor
2/16/17	Summons Eviction Action	J0403CV2017000088	Globe Regional Justice	Holiday Hills MHP	Kathleen Rowley	Kathleen Rowley / 2165 N Wheatfields Rd #3 Globe AZ	Kathleen Rowley / 2165 N Wheatfields Rd #3 Globe AZ	2/17/17	Served				Taylor
2/14/17	Criminal Subpoena	CR2016698	Globe Regional Justice	State of Arizona	Larry Paschall	Pearl Powell / Protected Information	None	2/17/17	Attempted				Taylor
2/14/17	Criminal Subpoena	CR2016730	Globe Regional Justice	State of Arizona	Paul Paschall	Pearl Powell / Protected Information	None	2/17/17	Attempted				Taylor
2/15/17	Criminal Subpoena	CR2016702	Globe Regional Justice	State of Arizona	Lesly Nielsen	Joseph Delara Jr / Protected Information	Joseph Delara Jr / Protected Information	2/19/17	Served				Mancha
2/15/17	Criminal Subpoena	CR2016708	Globe Regional Justice	State of Arizona	Benedict Tellez	Edward Brown Jr / Protected Information	None	2/21/17	Attempted			43	Mancha
2/21/17	Criminal Subpoena	CR2016582	Globe Regional Justice	State of Arizona	Faith Cano	Rudolph Cano / Protected Information	Rudolph Cano / Protected Information	2/21/17	Served				Mancha
2/21/17	Order of Protection	J0403CV2016000567	Globe Regional Justice	Protected Information	Faith Cano	Faith Cano / 178 S Canyon St Miami AZ	Faith Cano / 1400 E Ash St Globe AZ	2/21/17	Served				Mancha
2/14/17	Criminal Subpoena	CR2016730	Globe Regional Justice	State of Arizona	Paul Paschall	Pearl Powell / Protected Information	Pearl Powell / Protected Information	2/21/17	Served				Taylor
2/14/17	Criminal Subpoena	CR2016698	Globe Regional Justice	State of Arizona	Larry Paschall	Pearl Powell / Protected Information	Pearl Powell / Protected Information	2/21/17	Served				Taylor
2/21/17	Notice to Appear; Petition	JV201700035	Gila County Superior	State of Arizona	Protected Information	Protected Information	None	2/22/17	Attempted			27	Taylor
2/21/17	Notice to Appear; Petition	JV201700034	Gila County Superior	State of Arizona	Protected Information	Tanya Johnson / 369 W Silver St Globe AZ	Tanya Johnson / 369 W Silver St Globe AZ	2/22/17	Served				Taylor
2/21/17	Summons	J0403TR2017000219	Globe Regional Justice	State of Arizona	Aaron Landa	Aaron Landa / 7530 E Cardinal Ln Globe AZ	None	2/22/17	Attempted				Taylor
2/21/17	Notice to Appear; Petition	JV201700034	Gila County Superior	State of Arizona	Protected Information	Protected Information	Protected Information	2/22/17	Served				Taylor
2/21/17	Notice to Appear; Petition	JV201700035	Gila County Superior	State of Arizona	Protected Information	Raynell Pizano / 4373 Broad Way St Claypool, AZ	None	2/22/17	Attempted				Taylor
2/23/17	Subpoena	J0403TR2016002250	Globe Regional Justice	State of Arizona	Jason Dindial	Trooper Danaj / DPS HWY 60/70 Globe AZ	M. Sneezy / DPS HWY 60/70 Globe AZ	2/23/17	Served			22	Taylor
2/23/17	Summons & Complaint	J0403CV2017000053	Globe Regional Justice	Midland Funding LLC	Giselle Becker	Giselle Becker / 677 Woodrow Miami AZ	Giselle Becker / 5880 Hospital Dr Globe AZ	2/24/17	Served			47	Taylor
2/23/17	Writ of Restitution	J0403CV2017000081	Globe Regional Justice	Aaron McCarey	Phillip Peru Jr	Phillip Peru Jr / 953 S Linda Vista Dr Globe AZ	None / Writ cancelled	2/24/17	Attempted				Taylor

Constable Activity Log - Monthly

Constable: Ruben Mancha

Deputy: Richard Taylor

County: Gila
Precinct: Globe

Total Cases Served/Attempted: **107**

Mileage Total: **706**

Date Received	Type of Document	Case No.	Court	Plaintiff	Defendant	Address	Person Served/ Served Via	Date Served	Service	Mileage Start	Mileage End	Daily Mileage	Notes & Served By
2/23/17	Summons & Complaint	J0403CV2017000020	Globe Regional Justice	Midland Funding LLC	Janet Morales	Janet Morales / 2184 N Escudilla Dr #15 Globe AZ	Janet Morales / 5880 S Hospital Dr Globe AZ	2/24/17	Served				Taylor
2/23/17	Summons & Complaint	J0403CV2017000061	Globe Regional Justice	Midland Funding LLC	Cecilia Padilla	Cecilia Padilla / 5971 Grover Canyon Globe AZ	Cecilia Padilla / 5971 Grover Canyon Globe AZ	2/24/17	Served				Taylor
2/24/17	Notice to Appear; Petition	JV201700039	Gila County Superior	State of Arizona	Protected Information	Protected Information	Protected Information	2/24/17	Served				Taylor
2/24/17	Notice to Appear; Petition	JV201700039	Gila County Superior	State of Arizona	Protected Information	Holly Renteria / 1478 N Cherry Ave Globe AZ	Holly Renteria / 1478 N Cherry Ave Globe AZ	2/24/17	Served				Taylor
2/21/17	Summons	J0403TR2017000219	Globe Regional Justice	State of Arizona	Aaron Landa	Aaron Landa / 7530 E Cardinal Ln Globe AZ	None	2/27/17	Attempted			23	Mancha
2/24/17	Hearin Order on OP	J0403CV2017000090	Globe Regional Justice	Protected Information	Arlene Lopez	Protected Information	Protected Information	2/27/17	Served				Mancha
2/21/17	Notice to Appear; Petition	JV201700035	Gila County Superior	State of Arizona	Protected Information	Protected Information	Raynell Pizano / 4373 Broad Way St Claypool, AZ	2/27/17	Served				Taylor
2/21/17	Notice to Appear; Petition	JV201700035	Gila County Superior	State of Arizona	Protected Information	Raynell Pizano / 4373 Broad Way St Claypool, AZ	Raynell Pizano / 4373 Broad Way St Claypool, AZ	2/27/17	Served				Taylor
2/27/17	Notice of Trial / Hearing	J0403CV2016000346	Globe Regional Justice	Kenneth Hernandez	Winfred Barbee	Winfred Barbee / 7999 S Pinal View Dr #4 Globe AZ	Winfred Barbee / 7999 S Pinal View Dr #4 Globe AZ	2/28/17	Attempted			63	Taylor
2/27/17	Notice of Trial / Hearing	J0403CV2016000346	Globe Regional Justice	Kenneth Hernandez	Winfred Barbee	Winfred Barbee / 7999 S Pinal View Dr #4 Globe AZ	Winfred Barbee / 7999 S Pinal View Dr #4 Globe AZ	2/28/17	Served				Taylor
2/28/17	Summons Eviction Action	J0403CV2017000103	Globe Regional Justice	Gonzalo Reynoso	Guiting Liang	Guiting Liang / 722 W Sullivan St Miami AZ	Posted & Certified Mailed / 722 W Sullivan St Miami AZ	2/28/17	Served				Taylor
2/28/17	Notice to Appear; Petition	JV201700040	Gila County Superior	State of Arizona	Protected Information	Protected Information	None	2/28/17	Attempted				Taylor
2/28/17	Subpoena	M0441TR2017007009	Miami Magistrate	State of Arizona	Jason Dillard	Carolyn Moran / Protected Information	None	2/28/17	Attempted				Taylor
2/28/17	Notice to Appear; Petition	JV201700040	Gila County Superior	State of Arizona	Protected Information	Cheyenne Smith / 1264 Montecito Dr #2 Globe AZ	Cheyenne Smith / 1264 Montecito Dr #2 Globe AZ	2/28/17	Served				Taylor

GILA COUNTY TREASURER'S RECEIPT
GILA COUNTY, ARIZONA

DATE 3/7/17

CONTRACT #

GRANT #

DEPOSIT TO FUND General Funds / Multiple Funds FUND #

REMITTING AGENCY

BILLING PERIOD 2/1/17 - 2/28/17

Account Code	Direct Deposit / Check #	Revenue Description	Amount	
19152061	Cash	CESTB Wait Fees	5	00
1005.321.3405.80	Cash	Service Fee	308	00
	17 [illegible] 40432		32	00
	243466 37324		74	00
	2325		42	00
	1361		42	00
	3294		64	00
	4917		42	00
	4914		64	00
			# 697	00

Preparer Signature: Tina Holiday Title Constable Clerk

Approved Signature: Title

SUMMARY OF DEPOSIT

Currency	313
Coins	
Checks	384
Total	697

1050 = 36
1320 = 264
3294 = 3
313

TREASURER By Date

ORIGINAL OFFICE

119060

ARF-4237 **Consent Agenda Item 4. H.**

Regular BOS Meeting

Meeting Date: 03/21/2017

Reporting Period: February 2017

Submitted For: Anita Escobedo, Clerk of the Superior Court

Submitted By: Vicki Aguilar, Chief Deputy Clerk of the Superior Court

---

Information

Subject

Clerk of the Superior Court's Office Monthly Report for February 2017.

Suggested Motion

Acknowledgment of the February 2017 monthly activity report submitted by the Clerk of the Superior Court's Office.

Attachments

Clerk's Report February 2017

IN THE SUPERIOR COURT OF THE STATE OF ARIZONA

IN AND FOR THE COUNTY OF GILA

- - - - -

CLERK'S REPORT

FOR

February 2017

STATE OF ARIZONA)
) ss:
County of Gila)

ANITA ESCOBEDO, being first duly sworn according to law,
Deposes and says:

That she is the Clerk of the Superior Court of the State of Arizona, in and for the County of Gila, and that the annexed and foregoing report contains a true and correct statement of all fees collected by her in the office of said Clerk during the month of February 2017.

Vicki S. Aguilar Chief Deputy for
ANITA ESCOBEDO
Clerk of the Superior Court
Of Gila County, Arizona

SUBSCRIBED AND SWORN to before me this 9TH day of MARCH 2017.

ESTHER RIOS
Court Services Business Mgr.

Summary Allocation by Agency Report

GILA COUNTY SUPERIOR COURT

Report generated on : 3/9/2017 2:25:49 PM

Criteria : From Date : 2/1/2017 To Date :2/28/2017

Agency Code	Agency Name	GL Account Num	GL Account Name	Receipt Amount	Dishonored Amount	Adjusted Amount	Bond Forfeiture Amount	Net Amount	5% Set Aside
Agency Name :									
		5555	HOLD ACCOUNT	$7122.56		($14757.31)		($7634.75)	$0.00
Agency Name : BOND POSTED - THIS COURT									
ZBND	BOND POSTED - THIS COURT	ZBND	BOND POSTED - THIS COURT	$56548.05				$56548.05	$0.00
Agency Name : D.A.R.E. PROGRAM									
ZDARE	D.A.R.E. PROGRAM	ZDARE	D.A.R.E. PROGRAM	$10.00				$10.00	$0.00
Agency Name : ELECTED OFFICIALS RETIRE. FUND									
ZEORF	ELECTED OFFICIALS RETIRE. FUND	ZEORF	ELECTED OFFICIALS RETIRE. FUND	$2339.28		$113.59		$2452.87	$122.64
Agency Name : GILA COUNTY TREASURER									
CTREAS	GILA COUNTY TREASURER	ZOS2	2011 ADDTNL ASSMNT-CNTY TRSR	$11.00		$6.00		$17.00	$0.85
		ZOS1	2011 ADDTNL ASSMNT-STATE TRSR	$88.00		$48.00		$136.00	$6.80
		ZIAAF	ADMINISTRATIVE INDIGENT ASSESSMENT	$517.00		$825.00		$1342.00	$0.00
		ZADR	ALTER. DISPUTE RESOLUTION FUND	$53.15		$2.58		$55.73	$2.79
		ZATT	ATTORNEY FEE REIMBURSEMENT	$2739.95		$27.50		$2767.45	$0.00
		ZALTF	AZ LENGTHY TRIAL FUND	$358.38				$358.38	$17.92
		ZFEE	BASE FEES (GENERAL FUND)	$4845.65		$236.49		$5082.14	$254.11

THIS REPORT IS FOR INTERNAL USE ONLY. DO NOT DISTRIBUTE OR SHARE !

Summary Allocation by Agency Report

GILA COUNTY SUPERIOR COURT

Agency Code	Agency Name	GL Account Num	GL Account Name	Receipt Amount	Dishonored Amount	Adjusted Amount	Bond Forfeiture Amount	Net Amount	5% Set Aside
CTREAS	GILA COUNTY TREASURER	ZFINE	BASE FINES	$4757.67		$2506.71		$7264.38	$363.22
		ZCIEF	CHILDREN ISSUES EDUC FUND	$477.64		$80.00		$557.64	$27.88
		ZCEF	CLEAN ELECTIONS FUND	$522.24		$186.85		$709.09	$0.00
		ZCAA1	CONFIDENTAL ADDRESS ASSESSMENT FUND-STATE	$64.12		$47.50		$111.62	$5.58
		ZCAA2	CONFIDENTIAL ADDRESS ASSESSMENT FUND-LOCAL	$3.38		$2.50		$5.88	$0.29
		ZCIF	CONFIDENTIAL INTERMEDIARY FUND	$39.49		$1.92		$41.41	$2.07
		ZJDET	COUNTY JUV DETENTION	$66.48		$35.66		$102.14	$5.11
		ZCLLF	COUNTY LAW LIBRARY FUND	$2337.88		$113.47		$2451.35	$122.57
		ZCJEF	CRIMINAL JUSTICE ENHANCE FUND	$2670.11		$878.19		$3548.30	$177.42
		ZDNAS	DNA STATE SURCHARGE	$296.94		$112.07		$409.01	$20.45
		ZDS	DOCUMENT STOR. & RETRIEVAL FND	$946.37		$11.16		$957.53	$47.88
		ZDVCA	DOM. VIOL.-CHLD ABUSE PREV FND	$295.05		$14.30		$309.35	$15.47
		ZDREF	DOMESTIC RELATIONS EDUCATION	$188.56				$188.56	$9.43
		ZDVSF2	DOMESTIC VIOLENCE SERVICE FUND	$1338.08		$27.79		$1365.87	$68.29

THIS REPORT IS FOR INTERNAL USE ONLY. DO NOT DISTRIBUTE OR SHARE !

Summary Allocation by Agency Report

GILA COUNTY SUPERIOR COURT

Agency Code	Agency Name	GL Account Num	GL Account Name	Receipt Amount	Dishonored Amount	Adjusted Amount	Bond Forfeiture Amount	Net Amount	5% Set Aside
CTREAS	GILA COUNTY TREASURER	ZDVSF	DOMESTIC VIOLENCE SHELTER FUND	$89.93		$87.91		$177.84	$8.89
		ZDECJ	DRUG & GANG ENFORCEMENT FINES	$60.85		$179.50		$240.35	$12.02
		ZDGEF	DRUG & GANG ENFORCEMENT FUND	$2.26		$5.60		$7.86	$0.39
		ZCSVF	EXPEDITED CHILD SUPPORT AND	$650.53				$650.53	$32.53
		ZWITN	EXPERT WITNESS FUND	$1000.00				$1000.00	$0.00
		ZEXAP	EXTRA ADULT PROBATION ASMNT	$299.27				$299.27	$14.96
		ZEXJU	EXTRA JUV PROBATION ASMNT	$69.05		$13.32		$82.37	$4.12
		ZEXT	EXTRADITION REIMBURSEMENT	$26.20				$26.20	$0.00
		ZFAR2	FARE DELINQUENCY FEE	$74.20		$35.00		$109.20	$0.00
		ZFAR1	FARE SPEC COLLECTIONS	$389.00		$36.08		$425.08	$0.00
		ZFTGS	FILL-THE-GAP SURCHARGE (7%)	$365.57		$130.79		$496.36	$24.82
		ZCC	GEN JURIS CONCILIATION COURT	$1065.51		$48.33		$1113.84	$55.69
		ZGCAT	GILA COUNTY ATTORNEY - 60%	$3093.84		$1297.61		$4391.45	$0.00
		ZGCLK	GILA COUNTY CLERK OF THE COURT - 10%	$515.64		$216.27		$731.91	$0.00
		ZGCSC	GILA COUNTY SUPERIOR COURT - 30%	$1546.93		$648.80		$2195.73	$0.00

THIS REPORT IS FOR INTERNAL USE ONLY. DO NOT DISTRIBUTE OR SHARE !

Summary Allocation by Agency Report

GILA COUNTY SUPERIOR COURT

Agency Code	Agency Name	GL Account Num	GL Account Name	Receipt Amount	Dishonored Amount	Adjusted Amount	Bond Forfeiture Amount	Net Amount	5% Set Aside
CTREAS	GILA COUNTY TREASURER	ZJF	JAIL (INCARCERATION) FEES	$13.55				$13.55	$0.00
		ZJCLF	JUDIC. COLLECT. ENHANCE. FUND - LOCAL	$1148.26		$55.71		$1203.97	$60.20
		ZJCSF	JUDIC. COLLECT. ENHANCE. FUND - STATE	$2608.58		$126.62		$2735.20	$136.76
		ZJCL	JUDICIAL COLLECT ENHANCE FUND - LOCAL	$148.24		$125.99		$274.23	$0.00
		ZJCS	JUDICIAL COLLECT ENHANCE FUND - STATE	$278.76		$234.01		$512.77	$0.00
		ZJDU	JUVENILE DIVERSN FUND UNDER $40	$90.00		$1690.00		$1780.00	$89.00
		ZJS	JUVENILE PROBATION SERV FEES	$287.52		$294.62		$582.14	$29.11
		ZMSEF	MEDICAL SERVICES ENHANCE FUND	$730.64		$242.88		$973.52	$48.68
		ZMISC	MISCELLANEOUS FEES	$61.14		$1.61		$62.75	$3.14
		ZOS3	OFFCR SAFETY EQUIP-CITY POLICE	$20.00		$12.00		$32.00	$1.60
		ZOS5	OFFCR SAFETY EQUIP-DPS	$4.00				$4.00	$0.20
		ZOS4	OFFCR SAFETY EQUIP-SHERIFF	$20.00		$12.00		$32.00	$1.60
		ZOVF	OVERPAYMENT FORFEITED	$21.00		($21.00)		$0.00	$0.00
		ZPP	PASSPORT APPLICATION FEES	$1775.00		$75.00		$1850.00	$92.50

THIS REPORT IS FOR INTERNAL USE ONLY. DO NOT DISTRIBUTE OR SHARE !

Summary Allocation by Agency Report

GILA COUNTY SUPERIOR COURT

Agency Code	Agency Name	GL Account Num	GL Account Name	Receipt Amount	Dishonored Amount	Adjusted Amount	Bond Forfeiture Amount	Net Amount	5% Set Aside
CTREAS	GILA COUNTY TREASURER	ZPCOF	PRISON CONSTRUCTION AND	$3812.59		$320.00		$4132.59	$206.63
		ZPRS6	PROB SURCH 2006	$0.04				$0.04	$0.00
		ZPBA	PROBATION FEE ADULT	$13085.01		$2084.00		$15169.01	$758.45
		ZPUBZ	PUBLIC DEFENDER FEES			$73.00		$73.00	$0.00
		ZPSEF	PUBLIC SAFETY EQUIPMENT FUND	$2423.63				$2423.63	$0.00
		ZRCF	RESOURCE CENTER FUND	$197.99		$4.11		$202.10	$10.11
		ZSMEN	SPOUSAL MAINTENANCE FUND	$76.97		$3.72		$80.69	$4.03
		ZSTAT	STATE TREASURER - GENERAL FUND	$34.02				$34.02	$1.70
		ZTECH	TECHNICAL REGISTRATION FUND	$243.00		$30.00		$273.00	$13.65
		ZVRIF	VICTIMS RIGHTS IMPLEMENTATION	$102.00		$275.00		$377.00	$18.85
		ZPRS9	ZPRS9	$280.83		$140.00		$420.83	$21.04
Agency Name : OVERPAYMENT FUND									
ZOVER	OVERPAYMENT FUND	ZOVER	OVERPAYMENT FUND	$15.00		$21.00		$36.00	$0.00
Agency Name : RESTITUTION									
ZREST	RESTITUTION	ZREST	RESTITUTION	$5079.18		$980.55		$6059.73	$0.00
			Total:	**$130442.76**		**$0.00**		**$130442.76**	**$2921.44**

LESS SHADED AREAS:	**- 65,640.93**
	64,801.83
HOLD RECEIPTS	**+ 7,634.75**
	72,436.58

THIS REPORT IS FOR INTERNAL USE ONLY. DO NOT DISTRIBUTE OR SHARE !

TO THE HONORABLE BOARD OF SUPERVISORS:

I herewith present the annexed report as and for a true and correct account of all fees earned and collected by me as Clerk of the Superior Court.

Vicki S. Ogunbor Chief Deputy for
ANITA ESCOBEDO
Clerk of the Superior Court
Of Gila County, Arizona

ARF-4241 **Consent Agenda Item 4. I.**

Regular BOS Meeting

Meeting Date: 03/21/2017

Reporting Period: February 2017

Submitted For: Sadie Bingham, Recorder

Submitted By: Charlotte Williams, Chief Deputy Recorder

Information

Subject

Recorder's Office Monthly Report for February 2017

Suggested Motion

Acknowledgment of the February 2017 monthly activity report submitted by the Recorder's Office.

Attachments

Recorder's February 2017 Monthly Report

Gila County Recorder

REPORT FOR THE MONTH OF FEBRUARY 2017

I, Sadie Jo Bingham, County Recorder in and for the County of Gila, State of Arizona hereby state and certify that the fees earned for this month are as set forth in the attached report.

Sadie Jo Bingham

Sadie Jo Bingham, Gila County Recorder

GILA COUNTY TREASURER'S RECEIPT
GILA COUNTY, ARIZONA

GILA COUNTY TREASURER
RECEIVED
MAR 14 2017

DATE 3/13/2017

CONTRACT #

GRANT #

DEPOSIT TO FUND General FUND # 1005

REMITTING AGENCY Recorder (120)

BILLING PERIOD Feb 1-28, 2017

Account Code	Direct Deposit / Check #	Revenue Description	Amount	
1005.120.3400.99		Recording Fee	13621	.75
7145.120.3400.99		Recorder Storage	4131	—
7146.120.3400.99		Mining Fees	2	—
7147.120.3400.99		Computer Svs.	720	—
			18474	.75

Preparer Signature: Title Chief Deputy

Approved Signature: Title Recorder

SUMMARY OF DEPOSIT

Currency	
Coins	
Checks	18474.75
Total	18474.75

TREASURER By Date 3/14/17

ORIGINAL OFFICE

127465

Bank Deposit

From02/01/2017To02/28/2017

Deposit Totals

Payment Type	Actual Total	Adjusted Total
Cash	$1,196.50	
Check	$12,649.00	
Total Deposit	$13,845.50	

Included Tills

Bank Deposit	Deposited	Till	Expected	Actual Adjusted	Bank Account
5069	Feb 1, 2017	3_ReceiptStation1_Wed / 4982	$592.50	$592.50	Bank Account
5070	Feb 2, 2017	4_ReceiptStation1_Thu / 4984	$795.00	$795.00	Bank Account
5071	Feb 2, 2017	14_Payson_Thu / 4985	$250.00	$250.00	Bank Account
5072	Feb 3, 2017	5_ReceiptStation1_Fri / 4986	$523.00	$523.00	Bank Account
5073	Feb 3, 2017	15_Payson_Fri / 4987	$238.00	$238.00	Bank Account
5074	Feb 6, 2017	11_Payson_Mon / 4989	$235.00	$235.00	Bank Account
5075	Feb 6, 2017	1_ReceiptStation1_Mon / 4988	$556.00	$556.00	Bank Account
5077	Feb 7, 2017	2_ReceiptStation1_Tue / 4990	$437.00	$437.00	Bank Account
5078	Feb 7, 2017	12_Payson_Tue / 4991	$153.00	$153.00	Bank Account
5079	Feb 8, 2017	3_ReceiptStation1_Wed / 4993	$7,445.00	$7,445.00	Bank Account
5080	Feb 8, 2017	13_Payson_Wed / 4994	$189.00	$189.00	Bank Account
5082	Feb 9, 2017	4_ReceiptStation1_Thu / 4995	$609.00	$609.00	Bank Account
5083	Feb 9, 2017	14_Payson_Thu / 4996	$173.00	$173.00	Bank Account
5084	Feb 10, 2017	5_ReceiptStation1_Fri / 4998	$821.00	$821.00	Bank Account
5085	Feb 10, 2017	15_Payson_Fri / 4997	$237.00	$237.00	Bank Account
5086	Feb 13, 2017	1_ReceiptStation1_Mon / 5000	$1,148.00	$1,148.00	Bank Account
5087	Feb 13, 2017	11_Payson_Mon / 4999	$77.00	$77.00	Bank Account
5088	Feb 14, 2017	2_ReceiptStation1_Tue / 5001	$203.00	$203.00	Bank Account
5089	Feb 14, 2017	12_Payson_Tue / 5002	$289.00	$289.00	Bank Account
5090	Feb 15, 2017	13_Payson_Wed / 5004	$167.00	$167.00	Bank Account
5091	Feb 16, 2017	14_Payson_Thu / 5006	$202.00	$202.00	Bank Account
5092	Feb 15, 2017	3_ReceiptStation1_Wed / 5003	$980.00	$980.00	Bank Account
5093	Feb 16, 2017	4_ReceiptStation1_Thu / 5005	$708.00	$708.00	Bank Account
5094	Feb 17, 2017	5_ReceiptStation1_Fri / 5007	$2,512.00	$2,512.00	Bank Account
5095	Feb 17, 2017	15_Payson_Fri / 5008	$229.00	$229.00	Bank Account
5096	Feb 21, 2017	12_Payson_Tue / 5009	$318.00	$318.00	Bank Account
5097	Feb 21, 2017	2_ReceiptStation1_Tue / 5010	$857.00	$857.00	Bank Account
5098	Feb 22, 2017	13_Payson_Wed / 5011	$68.00	$68.00	Bank Account
5099	Feb 22, 2017	3_ReceiptStation1_Wed / 5012	$678.00	$678.00	Bank Account
5101	Feb 23, 2017	14_Payson_Thu / 5014	$38.00	$38.00	Bank Account
5102	Feb 24, 2017	5_ReceiptStation1_Fri / 5015	$694.00	$694.00	Bank Account
5103	Feb 24, 2017	15_Payson_Fri / 5016	$300.00	$300.00	Bank Account
5104	Feb 27, 2017	1_ReceiptStation1_Mon / 5018	$1,790.00	$1,790.00	Bank Account
5105	Feb 27, 2017	11_Payson_Mon / 5017	$201.00	$201.00	Bank Account
5106	Feb 28, 2017	2_ReceiptStation1_Tue / 5019	$937.00	$937.00	Bank Account
5107	Feb 28, 2017	12_Payson_Tue / 5020	$507.00	$507.00	Bank Account
5108	Feb 28, 2017	previousday / 5022	$411.00	$411.00	Bank Account
5124	Feb 28, 2017	previousday / 5039	$17.00	$17.00	Bank Account
		Total	$26,584.50	$26,584.50	
		Non-Deposit Total	($12,739.00)	($12,739.00)	
		Deposit Total	**$13,845.50**	**$13,845.50**	
		Total Till Over/Short		$0.00	

Bank Deposit

From02/01/2017To02/28/2017

Journal Activity

Account		Debits	Credits	Net
Asset				
1005SuspensePrePayAccounts	1005 Suspense - Prepay	$4,036.00	($7,095.00)	($3,059.00)
Cash	Cash/Check	$13,845.50	$0.00	$13,845.50
D-1005-120-01-4612-023	Recording Fee (deferred)	$40.00	($40.00)	$0.00
D-7145-120-01-4775-004	Recorder Storage and Retrieval (deferred)	$40.00	($40.00)	$0.00
ETransfer	Electronic Transfers	$4,361.00	$0.00	$4,361.00
	Total	**$22,322.50**	**($7,175.00)**	**$15,147.50**
Liability				
1005SuspenseChargeAccounts	1005 Suspense - Charge	$80.00	($80.00)	$0.00
	Total	**$80.00**	**($80.00)**	**$0.00**
Expense				
	Total	**$0.00**	**$0.00**	**$0.00**
Revenue				
1005-120-01-4612-001	Copies	$0.00	($542.50)	($542.50)
1005-120-01-4612-002	Certified Seal	$0.00	($39.00)	($39.00)
1005-120-01-4612-003	Postage	$0.00	($39.00)	($39.00)
1005-120-01-4612-005	Affidavit of Property Value	$0.00	($202.00)	($202.00)
1005-120-01-4612-008	Additional Transaction Fee	$0.00	($69.00)	($69.00)
1005-120-01-4612-012	Overpayment	$0.00	($28.00)	($28.00)
1005-120-01-4612-018	Misc Fees (Notification)	$0.00	($36.00)	($36.00)
1005-120-01-4612-023	Recording Fee	$0.00	($9,445.00)	($9,445.00)
1005-120-01-4612-026	Refunds	$0.00	($7.00)	($7.00)
7145-120-01-4775-004	Recorder Storage and Retrieval	$0.00	($3,991.00)	($3,991.00)
7146-120-01-4612	Mining Fees	$0.00	($2.00)	($2.00)
7146-120-01-4776-009	State Mining Fees	$0.00	($8.00)	($8.00)
7147-120-01-4774-031	Miscellaneous	$0.00	($720.00)	($720.00)
eRecording	eRecording	$4,262.00	($4,281.00)	($19.00)
	Total	**$4,262.00**	**($19,409.50)**	**($15,147.50)**
	Total	**$26,664.50**	**($26,664.50)**	**$0.00**

Range Summary

Range	Account	Debits	Credits	Net
Cash/Check				
	Cash Cash/Check	$13,845.50	$0.00	$13,845.50
	Range Total	**$13,845.50**	**$0.00**	**$13,845.50**

Sadie Bingham
Gila County Recorder

Month	FY No of Doc.	2016-2017 Recorder Storage & Retrieval 7145	Recording Fees 1005	Computer Svcs 7147	Mining fees 7146	Recorder Check to Treasurer
July	1,150	$ 4,060.00	$ 15,137.14	$ 888.31	$ 6.00	$ 20,091.45
Aug	1,180	4,424.00	15,409.32		15.00	$ 19,848.32
Sept	1,001	3,740.00	16,203.53	11,068.15	6.00	$ 31,017.68
Oct	1,040	3,964.00	7,354.18	3,961.35		$ 15,279.53
Nov	1,012	3,820.00	18,899.20	1,253.05	4.00	$ 23,976.25
Dec	1,185	4,392.00	15,818.88	34,157.00	3.00	$ 54,370.88
Jan	998	3,412.00	17,895.72	16,740.00	2.00	$ 38,049.72
Feb	1,087	4,131.00	13,621.75	720.00	2.00	$ 18,474.75
Mar						$ -
Apr						$ -
May						$ -
June						$ -
Total	**8,653**	**$ 31,943.00**	**$ 120,339.72**	**$ 68,787.86**	**$ 38.00**	**$ 221,108.58**

Fiscal Year All Monies **$ 221,108.58**

Report for January 2017

		CREDIT	DEBIT	TOTAL
SECTION I				
1005 (GENERAL FUND)	PAID INTO SUSPENSE ACCT	11,737.00	-	11,737.00
	PAID OUT OF SUSPENSE ACCT	-	(8,716.00)	(8,716.00)
	RECORDING FEES	10,795.50	-	10,795.50
	REFUNDS-EXCESS FEES	-	(194.93)	(194.93)
	INTEREST PD TO ACCT	0.18	-	0.18
Staled Checks		-	-	-
TOTAL 1005 FUNDS		22,532.68	(8,910.93)	13,621.75
SECTION II				
	7145 FUND (RECORDER)	4,131.00		4,131.00
	7146 FUND (MINING - 80% STATE TREAS)	8.00	(8.00)	-
	7146 FUND (MINING - 20% RECORDER)	2.00		2.00
	7147 FUND (COMPUTER SVCS)	720.00		720.00
TOTAL SEC II FUNDS		4,861.00	(8.00)	4,853.00
COMBINED TOTALS - TOTAL FEES COLLECTED		27,393.68	(8,918.93)	18,474.75

House Account Summary

Gila County AZ Recorder

For the Period of 02/01/2017 - 02/28/2017

Immediate and Deferred Accounts

House Account ID	House Account Name	Starting Balance	Charges	Payments	Ending Balance
ACCU	ACCUSEARCH	(92.00)	21.00	0.00	(71.00)
ADOT	AZ DEPT OF TRANS	(260.00)	0.00	0.00	(260.00)
APS	APS/COPIES	(165.00)	6.00	0.00	(159.00)
APSR	APS/RECORDINGS	(289.00)	0.00	0.00	(289.00)
ARARS	AZ RESEARCH &AMP RETRIEVAL SVCS	(189.00)	16.00	0.00	(173.00)
AWC	ARIZONA WATER COMPANY	(115.00)	0.00	0.00	(115.00)
AZDORI	ADOR ACCOUNTS PAYABLE	(1,050.80)	0.00	0.00	(1,050.80)
CRSI	Colorado Records Sooner Inc	(97.00)	0.00	0.00	(97.00)
CTS	COMPLETE TITLE SOLUTIONS	(109.00)	10.00	0.00	(99.00)
D2	D2 SURVEYING LLC	(125.00)	24.00	0.00	(101.00)
DS	DATA SERVICES	(1,000.00)	868.00	(868.00)	(1,000.00)
EPN	eRecording Partners Network	(1,000.00)	75.00	(75.00)	(1,000.00)
EQUIT	EQUITY SERVICES	(120.00)	4.00	0.00	(116.00)
FARES	CORELOGIC	(2,821.40)	190.00	0.00	(2,631.40)
FATM	FIRST AMERICAN MICROFICHE	(2,578.20)	165.00	0.00	(2,413.20)
FNDS	BLACK KNIGHT FINANCIAL SERVICES	(503.20)	190.00	(95.00)	(408.20)
GCCD	GILA COUNTY COMMUNITY DEVELOPMENT	164.50	0.00	0.00	164.50
HANSEN-ENGINEERING	HANSEN ENGINEERING & SURVEYING	(102.00)	0.00	0.00	(102.00)
IMAPP	IMAPP , INC	(53.40)	0.00	0.00	(53.40)
INDECOMM	INDECOMM	(1,000.00)	50.00	(50.00)	(1,000.00)
INDEPTH	INDEPTH SOLUTIONS INC	(111.00)	0.00	0.00	(111.00)
Ingeo	Ingeo - eRecording	(1,127.00)	901.00	(901.00)	(1,127.00)

House Account Summary

Gila County AZ Recorder

For the Period of 02/01/2017 - 02/28/2017

Immediate and Deferred Accounts

House Account ID	House Account Name	Starting Balance	Charges	Payments	Ending Balance
IRS	INTERNAL REVENUE SERVICE	(82.00)	80.00	(80.00)	(82.00)
LA001	First American Title Lenders Advantage	(428.50)	0.00	0.00	(428.50)
LTIC	Lawyers Title of Arizona inc	(174.00)	0.00	0.00	(174.00)
MHK	MORRIS HALL KINGHORN	(266.00)	0.00	0.00	(266.00)
NDTS-TSG	FIRST AMERICAN TITLE INSURANCE COMPANY	(867.00)	0.00	0.00	(867.00)
NewAcct1	Applied Technology Resources Inc	(200.00)	0.00	0.00	(200.00)
NTC	NATIONWIDE TITLE CLEARING	(982.00)	0.00	0.00	(982.00)
PIONE	PIONEER TITLE AGENCY FICHE	(2,621.00)	175.00	0.00	(2,446.00)
PTP2	PIONEER TITLE AGENCY RECORDINGS 2	(1,509.00)	3,258.00	(7,000.00)	(5,251.00)
Public Works Floodplain	Gila County	(81.00)	0.00	0.00	(81.00)
RSSI	RECORD SEARCHING SERVICES INC	(44.00)	15.00	0.00	(29.00)
RUI	RESEARCH UNLIMITED INC	(83.00)	0.00	0.00	(83.00)
simplifile	Simplifile - eRecording	(1,089.00)	2,668.00	(2,668.00)	(1,089.00)
SOUTHWES DIV	FIRST AMERICAN TITLE	(1,035.20)	0.00	0.00	(1,035.20)
TD	Timely Documents	(100.00)	0.00	0.00	(100.00)
Totals		**(22,305.20)**	**8,716.00**	**(11,737.00)**	**(25,326.20)**

ARIZONA STATE TREASURER'S OFFICE
1700 West Washington, Phoenix, Arizona 85007-2812
(602) 604-7800 FAX: (602) 542-7176

STATE REMITTANCE REPORT

Report Period: February 2017

Date: 3 / 13 / 2017

Depositor Code # 5393

Prepared By: C Williams

Title: Chief Deputy

Phone #: 9284028731

Depositor Name: Gila County Recorder

Address: 1400 E Ash St
Globe AZ 85501

negative amounts are not to be used on this form

(contact this Office for guidance regarding negative entries)

DESCRIPTION	STATUTE (ARS #)	AMOUNT
FINES & FEES		
Confidential Inter Fund	08-135; 12-284.03A8	
Juvenile Family Counseling	08-263C	
Victim's Rights – Juvenile	08-418; 41-191.08	
AHCCCS	11-292	
JCEF-Filing Fees	12-284.03A7; 22-281C1; 22-404C1	
JCEF - Time Payment	12-116B	
JCEF – Diversion Fee	12-114	
JCEF- Probation Assessment	12-114.01	
DNA Penalty Assessment	12-116.01C, J	
Domestic Violence	12-284.03A2	
Drug Prevention Res Center	12-284.03; 41-2402H	
Child Abuse	12-284.03A3	
Sex Offender Assessment	13-3824	
Anti-Racketeering Fund	13-811B; 13-2314.01	
Drug & Gang Enforce Acct	13-811C; 41-2402	
Community Punishment Program Drug Fines	13-821; 12-299	
Citizens Clean Election Fund	16-949D; 16-954C	
Game & Fish - Wildlife	17-313A	
AZ Lengthy Trial Fund	21-222	
Alternative Dispute Resolution Fund	22-281C2; 12-135; 12-284.03A5	
Mining Fees	27-208D	8.00
Child Passenger Restraint	28-907C	
DPS – Civil Penalty	28-2533C; 28-4139	
DUI Abatement Fund	28-1304; 28-1382, 3	
Civil Penalties (Gen. Fund)	28-737; 28-876; 28-2416; 32-1166	
AZ Highway Fines (HURF)	28-5438F; 28-2533C	
Victim Comp/Assistance	31-411F; 31-466B	
Registrar of Contractors	32-1107; 32-1124	
MSEF Penalty Assessment	36-2219.01; 12-116.02F	
CJEF Penalty Assessment	41-2401; 12-116.01	
Arson Detection Reward Fund	41-2167	
FTG Penalty Assessment 7%	41-2421J; 12-116.01B	
Prison Const & Ops Fund	41-1651; 5-395.01A4	
Dept of Law – Crim. Cases	41-2421E4	
GIITEM	41-1724; 11-1051	

DESCRIPTION	STATUTE (ARS #)	AMOUNT
FINES & FEES (continued)		
DUI, OUI Assessment (public safety equip fund)	5-395.01; 5-396, 7; 28-1381-3; 28-8284, 6-8; 14-1723	
FARE General Services Fee		
FARE Delinquent Fee		
FARE Special Collections Fee		
FARE Installment Fee		
Constable Ethics Fund	11-445 (80%)	
Constable Ethics Fund	11-445 (20%)	
Photo Enforcement Fee	41-1722	
Photo Enforcement Process Serving Fee		
OTHER FINES & FEES (describe and indicate ARS #)		
TAXES		
Prior Year Real Property	42-208	
Personal Property	42-208	
County Education District	15-991.01A	
Property-Min School Tax	15-992B, C	
State Water Banking	48-3715.03; 45-2425	
C.A.W.C.D.	48-3715	
Groundwater Replenishment	48-3773.A3; 48-3772	
OTHER TAXES (describe and indicate ARS #)		
90/10 REVENUE		
Mobile Home Relocation	33-1476.03 (90%)	
Mobile Home/Ins. & Cost	33-1476.03 (10%)	

TOTAL AMOUNT REMITTED:

By Check

By Cr Advice (Wire)

TOTAL 8.00

NOTES:

FOR STATE TREASURER USE ONLY

Certain funds are required to be remitted to the State Treasurer directly, while others are to be remitted to other entities; i.e., county treasurer, city treasurer, etc. Only use this form to remit funds to the Arizona State Treasurer as required by Arizona Revised Statutes (A.R.S.). For all other remittances, please check with your city or county. Form TRE 102A is to be used by counties for required detailed information. Please keep a copy of this report for your records.

ARF-4238 **Consent Agenda Item 4. J.**

Regular BOS Meeting

Meeting Date: 03/21/2017

Reporting Period: March 7, 2017

Submitted By: Melissa Henderson, Deputy Clerk

Information

Subject

March 7, 2017, Board of Supervisors' Meeting Minutes

Suggested Motion

Approval of the March 7, 2017, Board of Supervisors' meeting minutes.

Attachments

03-07-17 BOS Meeting Minutes

BOARD OF SUPERVISORS MEETING MINUTES
GILA COUNTY, ARIZONA

Date: March 7, 2017

TOMMIE C. MARTIN Chairman	**MARIAN E. SHEPPARD** Clerk of the Board
TIM R. HUMPHREY Vice-Chairman	By: Marian Sheppard Clerk of the Board
WOODY CLINE Member	Gila County Courthouse Globe, Arizona

PRESENT: Tommie C. Martin; Chairman (via ITV); Tim R. Humphrey, Vice-Chairman (via ITV); Woody Cline, Member (via ITV); John Nelson, County Manager (via ITV); Jefferson R. Dalton, Deputy Gila County Attorney, Civil Bureau Chief; Marian E. Sheppard, Clerk of the Board; and Melissa Henderson, Deputy Clerk.

Item 1 – CALL TO ORDER - PLEDGE OF ALLEGIANCE

Chairman Martin called the regular session to order at 10:00 a.m. this date in the Board of Supervisors' hearing room. John Nelson led the Pledge of Allegiance and Pastor Rich Ritchey of the First Church of the Nazarene in Payson delivered the Invocation.

Item 2 – PRESENTATION:

A. Public recognition of four employees for March's "Spotlight on Employees" Program, as follows: Megan Miller, David Hornung, Brian Dirks and Dennis Newman.

Erica Garcia, Human Resources Assistant Senior, read aloud letters of nomination for the above listed employees. Ms. Miller has been employed with Gila County for 8 years as a Superior Court Clerk, and she was nominated by a member of the public. Sheriff Shepherd wrote 3 separate nomination letters for Sergeant Hornung, who has been employed at Gila County for 13 years; Deputy Dirks, who has been employed at Gila County for 3 years; and Sergeant Newman, who has been employed at Gila County for 14 years. All officers were recognized for their role in search and rescue efforts for a plane crash that occurred in northern Gila County on January 2, 2017. Deputy Dirks mentioned that Tonto Rim Search and Rescue also played a key role in locating the crash site and recovering the bodies, etc. Chairman Martin suggested presenting a certificate of appreciation to that group to which Deputy Dirks

agreed. Each Board member thanked Ms. Miller, Sergeant Hornung, Deputy Dirks and Sergeant Newman.

Item 3 – PUBLIC HEARINGS:

A. Information/Discussion/Action to adopt Ordinance No. 2017-01 amending the Zoning Map for Unincorporated Areas of Gila County for the rezoning of parcel numbers 205-07-020M, 205-07-020N and 205-07-020P from Commercial Three (C3) to Residence One with a D8 Density District (R1-D8) for the purpose of allowing a single family home on each parcel with certain conditions as outlined in the Ordinance.

Robert (Bob) Gould, a temporary Planner for Gila County, presented this agenda item. He advised that these 3 parcels of land are approximately one-half acre in size. They are being sold for the purpose of allowing a single family home on each parcel. He advised that residential development is not allowed within commercial zoning under Gila County regulations; therefore, an application has been submitted to rezone the subject parcels to residential zoning. Mr. Gould further advised that 20-25 years ago, the Board of Supervisors changed the zoning on a strip of land (approximately 400 feet wide) which runs along the front portion of Highway 188 from residential to commercial zoning. The change in zoning at that time was most likely due to expected commercial development; however, at present, most of the properties in the subject area are used for residential purposes. Mr. Gould recommended that the Board adopt Ordinance No. 2017-01 to rezone the subject properties for residential use. Chairman Martin asked the Board members if they had any questions and Vice-Chairman Humphrey commented that he didn't have any questions other than to recognize that there is non-compatibility of parcels in this area due to mixed uses to which Mr. Gould affirmed. Chairman Martin opened the public hearing. There weren't any comments, so she closed the public hearing and asked for a motion. Upon motion by Supervisor Cline, seconded by Vice-Chairman Humphrey, the Board unanimously adopted Ordinance No. 2017-01. **(A copy of the Ordinance is permanently on file in the Board of Supervisors' Office.)**

Item 3 - REGULAR AGENDA ITEMS:

A. Information/Discussion/Action to authorize the advertisement of Invitation for Bids No. 021317-1-Timber Region Chip Seal Project.

Steve Sanders, Public Works Division Director, advised that the County's half-cent transportation excise tax will be used to complete the project listed under this agenda item and the following agenda item. He stated that it was decided to advertise two separate invitation for bids for the Timber Region Chip Seal Project and the Copper Region Chip Seal Project (in the following agenda item) due to the cost of materials in each area. If approved, the County will advertise

to select a contractor to chip seal approximately 18 miles of road in the Timber Region, which is in northern Gila County. This project was identified in the County's transportation study. Upon motion Vice-Chairman Humphrey, seconded by Supervisor Cline, the Board unanimously authorized the advertisement of Invitation for Bids No. 021317-1.

B. Information/Discussion/Action to authorize the advertisement of Invitation for Bids No. 021517-Copper Region Chip Seal Project.

Mr. Sanders advised that this project was also identified in the County's transportation study to chip seal approximately 2 miles of road in the Copper Region, which is in southern Gila County. This project will also be funded with the County's half–cent transportation excise tax. Upon motion by Supervisor Cline, seconded by Vice-Chairman Humphrey, the Board unanimously authorized the advertisement of Invitation for Bids No. 021517.

C. Information/Discussion/Action to authorize the advertisement of Invitation for Bids No. 021617-Deer Creek Cul-de-Sac Improvements.

Mr. Sanders stated that this cul-de-sac is in dire need of repairs. Removing the old pavement and replacing it with new pavement and base material is being proposed for the cul-de-sac to provide a repair which will last for several years. Upon motion by Vice-Chairman Humphrey, seconded by Supervisor Cline, the Board unanimously approved the advertisement of Invitation for Bids No. 021617.

D. Information/Discussion/Action to approve the amendment of Policy No. BOS-HRS-006, Section II, Policy, County Manager, #4, and Policy No. BOS-FIN-002, Section II, Policy, Contract Approval, #1, #3, #5, and #6 to authorize the Assistant County Manager to sign Payroll Authorization Forms and contracts of $50,000 or less per year to prevent an undue delay in the day-to-day business of the County.

John Nelson, County Manager, advised that when the previous County Manager retired from the County, there was confusion whether or not he delegated authority to someone else to sign payroll authorization forms and contracts totaling $50,000 or less. As a result, policy numbers BOS-HRS-006 and BOS-FIN-002 were revised to allow the Assistant County Manager the authority to sign those related documents in addition to the County Manager. Jeff Dalton, Deputy County Attorney, Civil Bureau Chief, reviewed the revised policies and informed management that only the Board of Supervisors has the authority to change these County policies, which are being presented today for approval. Mr. Nelson asked for the Board's approval. Upon motion by Supervisor Cline, seconded by Vice-Chairman Humphrey, the Board unanimously approved revised policy numbers BOS-HRS-006 and BOS-FIN-002 as presented.

E. Information/Discussion/Action to consider a sealed bid for the purchase of Assessor's tax parcel number 206-21-045B.

Marian Sheppard, Clerk of the Board, advised that the subject property is located at 196 S. Glass Canyon in Miami. The property contains a house that is deteriorated and it has been vandalized. She advised that a sealed bid has been presented which contains a bid that is less than the lien amount of $4,478. Ms. Sheppard added that the Board adopted a resolution several years ago which states that the Board may waive the requirement to sell the property for no less than the total lien amount if a condition warrants selling a parcel at a lesser price. Chairman Martin asked Ms. Sheppard to open the sealed bid at this time. Ms. Sheppard announced that Kim Marie Ogrin submitted a bid in the amount of $3,205.60, and she proceeded to read a letter from Ms. Ogrin. Ms. Ogrin's letter states that she is a single mother with two sons and if the Board accepts her offer, she promises to clean up the property and fix the house for habitation by her and her sons. Upon motion by Vice-Chairman Humphrey, seconded by Supervisor Cline, the Board unanimously accepted a bid in the amount of $3,205.60 from Ms. Ogrin for the purchase of Assessor's tax parcel number 206-21-045B.

F. Information/Discussion/Action regarding a proposed two-year Employment Contract between Gila County and John F. Nelson for the period March 1, 2017, through February 28, 2019.

Chairman Martin stated that this contract is necessary, not only for County Manager John Nelson, but also to attract a new County Manager at such time as Mr. Nelson departs the County and to establish a process for hiring a County Manager. She mentioned that all Arizona counties have executed a contract with the County Manager except for La Paz, Apache, Greenlee, Graham and Gila counties. She advised that other county contracts were reviewed in order to ensure that the proposed contract contains the appropriate language. Mr. Nelson added that the contract provides language that addresses termination for cause and without cause, and it includes a six-month severance package for a termination without cause. He pointed out that the proposed contract does not address a requirement for the County Manager to reside in Gila County; however, any new contract with a County Manager will contain that language. Mr. Nelson does live in Gila County.

Supervisor Cline commented that he was not comfortable entering into a contract with the County Manager as it would set a precedent and it is his understanding that previous Gila County Managers did not have a contract. He spoke with Mr. Nelson earlier this morning and has since learned that a contract is a beneficial tool in attracting candidates because it provides some security. He reiterated that he is not in favor of entering into a contract with the County Manager; however, he added that he is pleased with Mr. Nelson's

performance. His focus is more about hiring a future County Manager. Supervisor Cline stated that he wants to do what is best for Gila County. He agreed to consider the proposed contract, but added that he would prefer to have more time to review and discuss it prior to the Board taking a vote.

Vice-Chairman Humphrey advised that he is a general contractor; therefore, he believes that contracts are necessary in doing business as it puts "everyone on the same page." He added that if the contract needs to be changed in the future, it may be amended at any time. He also supports the inclusion of a clause in the contract that will require any future County Manager to reside in Gila County.

Chairman Martin supports entering into a contract with Mr. Nelson, so if it is discovered that revisions need to be made to the contract, they can be made before the next County Manager is hired. She expressed her belief that if the County had offered a contract at the time the County was previously going through the process to hire a County Manager, it would have received far more qualified applicants. She does want to establish a precedent that all County Managers must enter into a contract with the County.

Supervisor Cline added that possibly a contract should be implemented for other County positions. Supervisor Cline stated that even though he had a good conversation earlier this morning with Mr. Nelson, he does have some more questions as the County moves forward.

Chairman Martin advised that the County Manager's salary also needs further review before a new County Manager is hired.

Upon motion by Vice-Chairman Humphrey, seconded by Supervisor Cline, the Board unanimously approved a two-year Employment Contract between Gila County and John F. Nelson for the period March 1, 2017, through February 28, 2019.

Item 4 - CONSENT AGENDA ACTION ITEMS: (Any matter on the Consent Agenda will be removed from the Consent Agenda and discussed and voted upon as a regular agenda item upon the request of any member of the Board of Supervisors.)

A. Approval of Amendment No. 2 to Contract No. 07012016-17 between the Arizona Community Action Association and the Gila County Community Services Division to increase Utility Repair Replacement Deposit (URRD) funds by the amount of $35,000 for a new total allocation of $87,092.

B. Approval to accept two grant awards from the Constables Ethics, Standards, and Training Board, and authorization of the Chairman's

signature on Grant Award Contract No. CNA17-501 in the amount of $930.69 and Grant Award Contract No. CNA17-502 in the amount of $1,433.89 for the County Constables' Offices' purchase of a ballistic vest and uniforms, respectively.

C. Approval to appoint Lori Brown to the Gila County Planning and Zoning Commission beginning March 7, 2017, through December 31, 2020.

D. Acknowledgment of the reappointment of Diane Hallett to the Beaver Valley Domestic Water Improvement District governing board effective January 1, 2017, through December 31, 2020.

E. Acknowledgment of the January 2017 monthly activity report submitted by the Clerk of the Superior Court's Office.

F. Approval of the February 21, 2017, and February 28, 2017, Board of Supervisors' meeting minutes.

G. Acknowledgment of the Human Resources reports for the weeks of February 7, 2017, February 14, 2017, February 21, 2017, and February 28, 2017.

FEBRUARY 7, 2017

DEPARTURES:
1. Karla Fandrich – Community Services – Administrative Clerk Senior – 02/24/17 – CAP(.50)/GEST(.50)Funds – DOH 06/20/16
2. Lynn Key – Public Works – Building Maintenance Technician – 02/02/17 – Facilities Management Fund – DOH 09/12/16
3. John Root – Public Works – Fleet and Equipment Maintenance Supervisor – 04/14/17 – Fleet Management Fund – DOH 03/16/77
NEW HIRES:
4. Kevin Steveson – Public Works – Recycling and Landfill Operations Worker – 02/13/17 – Recycling and Landfill Management Fund – Replacing Edward Avalos
DEPARTMENTAL TRANSFERS:
5. Karen Brake – Sheriff's Office – From Administrative Clerk – To Accounting Clerk Specialist – 01/30/17 – General Fund – Replacing Lieneke Mellema
6. Charlotte Williams – Recorder's Office – From Office Supervisor – To Chief Deputy Recorder – 01/31/17 – General Fund – Replacing Kaycee Reece
OTHER ACTIONS:
7. John Nelson – Board of Supervisors – County Manager – 01/22/17 – General Fund – Revision
8. Shelley McPherson – Human Resources – Director of Human Resources – 01/22/17 – General Fund - Revision

REQUEST TO POST:
9. Community Services – Administrative Clerk Senior – Vacated by Karla Fandrich
10. Recorder's Office – Office Supervisor – Vacated by Charlotte Williams
11. Superior Court – Court Case Management Systems Trainer – Vacated by Patricia England

FEBRUARY 14, 2017

DEPARTURES:
1. Rhonda Wood – Public Works – Administrative Clerk Senior – 02/07/17 – Facilities Management Fund – DOH 12/19/06
2. Erin Baker – Probation – Deputy Probation Officer 1 – 02/17/17 – Juvenile Intensive Probation Supervision Fund – DOH 07/15/16
NEW HIRES:
3. Gabriel Arrellin – Health and Emergency Services – Animal Control Officer – 02/21/17 – Rabies Control Fund – Replacing Michael Halbert
4. Nick Sedlachek – Sheriff's Office – Detention Officer – 02/21/17 – General Fund – Replacing Brian Buchanan
5. Michael Huckeby – Public Works – Road Maintenance and Equipment Operator – 02/21/17 – Public Works Fund – Replacing Wesley Wilson
END PROBATIONARY PERIOD:
6. Marlowe Cassadore – Elections – Voter Outreach Coordinator – 02/22/17 – General Fund
7. George Allen – Public Fiduciary – Public Fiduciary Services Specialist – 02/22/17 – General Fund
8. Ashlie Enfield-Goss – Sheriff's Office – Property and Evidence Custodian – 02/15/17 – General Fund
9. Kimberly Rust – Payson Constable's Office – Constable Clerk – 02/01/17 – General Fund

FEBRUARY 21, 2017

DEPARTURES:
1. Porter Wilbanks – Public Works – Road Maintenance and Equipment Operator Senior – 02/21/17 – Public Works Fund – DOH 11/17/08
NEW HIRES:
2. Thomas Zienka – Public Works – Road Maintenance and Equipment Operator – 03/13/17 – Public Works Fund – Replacing Travis Wills
END PROBATIONARY PERIOD:
3. Mark Warden – Public Works – Construction Project Manager – 02/28/17 – Facilities Management Fund
4. Betty Hurst – Finance – Contracts Administrator – 02/28/17 – General Fund
5. Rose Holiday – Globe Constable's Office – Constable Clerk – 02/08/17 – General Fund

6. Patti Dremler – Superior Court – Administrative Clerk Senior – 03/21/17 – CASA(.50)/Court Improvement Project(.50) Funds
OTHER ACTIONS
7. Scott Buzan – Community Development – Community Development Site Supervisor – 02/06/17 – General Fund – Temporary Assignment
REQUEST TO POST:
8. Information Technology – Systems Specialist – Vacated by Sarah Bennett
9. Assessor's Office – Mapping Technician – Vacated by Melissa Henderson
10. Public Works – Road Maintenance and Equipment Operator Senior – Vacated by Brian Jennings and John Griffin
11. Public Works – Road Maintenance and Equipment Operator Senior – Vacated by Porter Wilbanks
12. Public Works – Road Maintenance and Equipment Operator – Vacated by Joel McDaniel and Justin Newby
13. Public Works – Road Maintenance and Equipment Operator – Vacated by John Digman

FEBRUARY 28, 2017

TEMPORARY HIRES TO COUNTY SERVICES:
1. Nancy Simmons – Board of Supervisors – Temporary Executive Administrative Assistant – 03/06/17 – General Fund – Replacing Carl Melford
END PROBATIONARY PERIOD:
2. Brittany Francis – Health and Emergency Services – Staff Nutritionist – 03/19/17 – WIC(.99)/Commodity Supplement Food Program(.01) Funds
3. Kristopher Tower – Health and Emergency Services – Animal Control Officer – 02/22/17 – Rabies Control Fund
4. Zachary Paul – Public Works – GIS Analyst – 03/12/17 – General Fund
OTHER ACTIONS:
5. Stephanie Szpotowski – Sheriff's Office – 911 Dispatcher Supervisor – 03-23-17 – General Fund – Extending probationary period an additional six months

H. Approval of finance reports/demands/transfers for January 23-29, 2017; January 30-February 5, 2017; February 6-12, 2017; February 13-19, 2017, and February 20-26, 2017.

Approve demands and budget amendments for operating transfers. Warrant numbers 281683 through 281686, 281688 through 281752, 281754 through 281775, 271777 through 281805, and 281807 totaling $1,072,032.48 for the period 1-23-17 through 1-29-17; warrant numbers 281809 through 281891 and 281893 through 281913 totaling $256,633.53 for the period 1-30-17 through 2-05-17; warrant numbers 281919 through 281957, 281959 through 282050, and 282052 totaling $960,373.60 for the period 2-06-17 through 2-12-17; and warrant numbers 282053 through 282153 totaling $1,047,375.79

for the period 2-13-17 through 02-19-17; warrant numbers 282154 through 282247 and 282249 through 282280 totaling $1,171,382.43 for the period 2-20-17 through 2-26-17.

Pursuant to A.R.S. §11-217(C), the published minutes shall include all demands and warrants approved by the Board in excess of one thousand dollars except that multiple demands and warrants from a single supplier or individual under one thousand dollars whose cumulative total exceeds one thousand dollars in a single reporting period shall also be published. **(A listing of issued warrants and voided warrants are permanently attached to these minutes.)**

I. Acknowledgment of contracts under $50,000 which have been approved by the County Manager for the weeks of January 23, 2017, through January 27, 2017; and January 30, 2017, through February 3, 2017.

Upon motion by Supervisor Cline, seconded by Vice-Chairman Humphrey, the Board unanimously approved Consent Agenda Action items 4A through 4I.

Item 5 - CALL TO THE PUBLIC: Call to the Public is held for public benefit to allow individuals to address the Board of Supervisors on any issue within the jurisdiction of the Board of Supervisors. Board members may not discuss items that are not specifically identified on the agenda. Therefore, pursuant to Arizona Revised Statute §38-431.01(H), at the conclusion of an open call to the public, individual members of the Board of Supervisors may respond to criticism made by those who have addressed the Board, may ask staff to review a matter or may ask that a matter be put on a future agenda for further discussion and decision at a future date.

There weren't any comments from the public.

Item 6 - At any time during this meeting pursuant to A.R.S. §38-431.02(K), members of the Board of Supervisors and the County Manager may present a brief summary of current events. No action may be taken on information presented.

Each Supervisor presented a summary of current events. Mr. Nelson advised that he did not have anything to report at this time.

There being no further business to come before the Board of Supervisors, Chairman Martin adjourned the meeting at 10:50 a.m.

APPROVED:

_____

Tommie C. Martin, Chairman

ATTEST:

_____

Marian Sheppard, Clerk of the Board

ARF-4227 **Consent Agenda Item 4. K.**

Regular BOS Meeting

Meeting Date: 03/21/2017

Reporting Period: Report for County Manager Approved Contracts Under $50,000 for Weeks Ending 02-17-17 and 02-24-17.

Submitted For: James Menlove, Finance Director

Submitted By: Betty Hurst, Contracts Administrator

Information

Subject

Report for County Manager Approved Contracts Under $50,000 for Weeks Ending 02-17-17 and 02-24-17.

Suggested Motion

Acknowledgment of contracts under $50,000 which have been approved by the County Manager for the week of February 13, 2017, through February 17, 2017; and February 20, 2017, through February 24, 2017.

Attachments

Report for County Manager approved contracts under $50,000 for weeks ending 02-17-17, and 02-24-17

Contract No. 13412-S with Norment Security Group

State Contract No. ADSPO13-043962 with SD Crane

Amendment No. 2 to Service Agreement No. 013015-2

Amendment No. 1 to Service Agreement No. 112916

Service Agreement No. 020317 with Kino Floors & Interiors, LLC

Service Agreement No. 020417 with AAA Lock Service

Service Agreement No. 021317 with Steven Enterprises, Inc.

Amendment No 1 to Service Agreement No. 120816

Service Agreement No. 021017-1 with C&M Communications

Amendment No. 3 to Service Agreement No. 120514

Amendment No. 2 to Service Agreement No. 110614-1

Service Agreement No. 022117 with Gila County Rodeo Committee

Agreement with Center for Disease Detection, LLC

Amendment No. 2 to Service Agreement No. 121014-1

Amendment No. 1 to Service Agreement No. 011116

COUNTY MANAGER APPROVED CONTRACTS UNDER $50,000

February 13, 2017 thru February 17, 2017

Number/Vendor	Title	Amount	Term	Approved	Renewal Option	Summary
13412-S Norment Security Group	CCTV Upgrades with IP Cameras for Payson Jail	$ 31,435.11	06-30-17	02-15-17	Expires	Upgrade video recording equipment to provide the following benefits: 1) Allow for current expansion of 5 additional cameras to provide better coverage for improved inmate and officer safety. 2) Provide capacity for future video surveillance expansion needs at this facility. 3) Provide RAIDS (data redundancy) capabilities to our recording system so a single disk failure will not cause a loss of continuous data recording availability.
ADSPO13-043962 SD Crane	Door Reconstruction for Two Buildings	$14,133.35	04-30-17	02-15-17	Expires	Copper Building Probation needs a door moved for security reasons with their clients that was not considered during design. Public Works Admin Building doors will be removed and opening will be filled in to make a center opening for just one metal door.
013015-1 DJ's Companies, Inc.	Amendment No. 2 to extend contract term.	$2,392.00	02-10-17 to 02-09-18	02-15-17	Option to Renew	**Amendment No. 2** will serve to extend the term of the contract from February 10, 2017 to February 9, 2018. Landscape crews, made up of primarily prison trustees, have a portable toilet on a trailer to use. The trailer will be parked at the Fairgrounds after 2 PM on week days, ready for service by DJ's Companies. This contract is for service only, not rental.

February 13, 2017 thru February 17, 2017

Number/Vendor	Title	Amount	Term	Approved	Renewal Option	Summary
112916 BKB Services	Amendment No. 1 will extend contract term	**N/A**	02-28-17	02-15-17	Expires	Amendment No. 1 will serve to extend the contract date through February 28, 2017, due to needed time for completion. Rain gutters are original to building installation in 1998. Beginning to fall off of building and leaking.
020317 Kino Floors & Exteriors, LLC	Window Tint for Finance Windows	$416.43	02-28-17 to 06-30-17	02-15-17	Expires	Since the Copper Building was occupied the sun coming up has been blinding and will be hot in the summer through the doors. Solution was window tint instead of blinds that would have to be cleaned and would most likely get tangled with the door traffic.
020417 AAA Lock Services	Replacing lock on Gun Lockers	$578.76	02-08-17 to 02-28-17	02-15-17	Expires	Need Vendor with the capabilities and tools required to open cabinets and lockers that no longer have keys or are otherwise not operational. Provide replacement locks for gun lockers and install.

February 20, 2017 thru February 24, 2017

Number/Vendor	Title	Amount	Term	Approved	Renewal Option	Summary
021317 Steven Enterprises, Inc.	Office Machine Repair	$1,500.00	02-23-17 to 02-22-18	02-23-17	Option to renew	Public Works has a HP T2300 Design jet Color Plotter that is not working. We need a contract for someone to come and diagnose the problem and repair it. This machine is needed to do the daily tasks in Floodplain it is a critical piece of machinery.
120816 DJ's Companies, Inc.	Amendment No. 1 Will Extend contract term.	N/A	02-28-17	02-23-17	Expires	**Amendment No. 1** will serve to extend the term of the contract through February 28, 2017 due to unforeseen delays. Labor and material to change out 4" pressure reducing valve and related fittings.
021017-1 C&M Repeater Communications	Mobile Repeater Installation-Payson	$17,500.00	06-30-17	02-23-17	Expires	This is for installation of mobile repeater, ban pass filter, notch filter, antenna and associated wirings plus programming of radio and mobile repeater for Patrol vehicles..
120514 Service Plus, Inc.	Appliance Service and Repair	$5,000.00	01-01-17 to 12-31-17	02-23-17	Option to Renew	**Amendment No. 3** will serve to extend the term of the contract from January 1, 2017 to December 31, 2018. Contractor will provide the repair and service of miscellaneous equipment located at the Globe and Payson Sheriff's Office, Globe Posse Building, and Roosevelt Sub-Station. List of equipment includes **but is not limited to**: ice maker, commercial & convention ovens, commercial washers, dryers, drinking fountain, boiler system, dishwasher, kettle/warmer, evap. cooler, walk-in cooler and sinks.

February 20, 2017 thru February 24, 2017

Number/Vendor	Title	Amount	Term	Approved	Renewal Option	Summary
110614-1 Azteca Glass East	Amendment No.2 to extend contract term.	$5,000.00	02-04-17 to 02-03-18	02-23-17	Option to renew	**Amendment No. 2** will extend the contract term for one year from February 4, 2017 to February 3, 2018. Company needed to repair or replace building glass in various Gila County buildings in and around Globe, Arizona on an On-Call basis or as needed basis.
022117 Gila County Rodeo Committee	Copper Dust Stampede Rodeo	$10,000.00	03-30-17	02-23-17	Expires	To assist the Gila County Rodeo Committee with the 2017 Copper Dust Stampede Rodeo, to be held on March 11th and 12th.
Center for Disease Detection	Laboratory Testing Services	$2,800.00	02-01-17 to 01-31-18	02-23-17	Expires	Contractor will provide laboratory testing services for the Gila County Health Department. The price includes all collection devices, shipping boxes, postage paid shipping envelopes, and testing. All supplies are tracked by the contractor's computer and will automatically be shipped to keep the department inventory well stocked.

February 20, 2017 thru February 24, 2017

Number/Vendor	Title	Amount	Term	Approved	Renewal Option	Summary
121014-1 Atomic Pest Control	Pest Control Service for Northern Gila County	$3,320.00	02-10-17 to 02-09-18	02-23-17	Option to Renew	**Amendment No. 2** has been issued to extend the term of the agreement from February 10, 2017 to February 09, 2018. Contractor to provide pest control service for Northern Gila County Facilities; Star Valley Roads Office, Gas Shop, Diesel Shop, Administration Bldg, Courthouse Complex, Assessors/Recorders Bldg, Community Services Bldg, Sheriff's Office/Jail & JP Court Bldg, Other non-routine on call services such as bee removal, etc.
011116 Anderson Collision	Amendment No. 1 to increase contract amount.	$593.53 for a new total contract amount of $4,656.42	01-01-17 to 12-31-17	02-23-17	Option to Renew	**Amendment No. 1** will serve to increase the contract amount by $593.53 due to the need for additional parts required for the repair. Body work and repairs for vehicle B-190 due to accident damage. Other vendor provided an incomplete quote lacking all required parts for repair.

CONTRACT AGREEMENT FORM

Contract Name: CCTV Upgrades with IP Cameras for Payson Jail **Contract No.:** S.A.V.E. Contract No. 13412-S

Statement of Purpose and Need (3-5 Sentences)
Upgrade video recording equipment to provide the following benefits: 1) Allow for current expansion of 5 additional cameras to provide better coverage for improved inmate and officer safety. 2) Provide capacity for future video surveillance expansion needs at this facility. 3) Provide RAIDS (data redundancy) capabilities to our recording system so a single disk failure will not cause a loss of continuous data recording availability.

Contract End Date: 063017 **Renewal Option:** ☐ Yes ☒ No

Maximum Dollar Limit: $31,435.11

Contract Information

Firm Name: Norment Security Group **Contact Person:** Gary Robinson

Address: 446 N Austin Drive Suite 1 **Phone No:** 480-940-6970

City: Chandler **State:** AZ **Fax:** **Email:** grobinson@cornerstonedetention.com

Special Notes:
Gila County is part of the Strategic Alliance for Volume Expenditures (S.A.V.E.), which includes the Arizona State Contract, for cooperative purchasing. By using the City of Avondale contract with Stanley Security Solutions., it will save the county in both time and money for a rate that already been established in the City of Avondale bidding process.

Authorization to use a Cooperative Purchasing Agreement with the City of Avondale, Contract No. 13412, for Security Electronic Systems: Parts, Maintenance & Repair approved this 16th **day of** February **. 2017.**

GILA COUNTY MANAGER

Jacque Sandus

For John Nelson

CORNERSTONE

Normont Security Group

146 North Arizona Drive Suite 1
Chandler Arizona 85226-2634
Phone: (480) 940-6970 Facsimile: (480) 254-3535

Proposal

Project: Gila County Sheriff - Payson IP CCTV Upgrade - revised 12-21-16
Location: Gila County - Payson
Customer: Gila County Sheriff - Payson
Contact: Dwight Payne
Phone No.: (928) 701-2217
Email: [illegible]

Prepared By: M. Bauer

Date: 12/21/16
Time: 16:18
Proposal No.: 502062163 56MB1
Page: 1

Scope of Work: Furnish and install Five (5) IP cameras.

One (1) Indoor Fixed inside the main jail entry door,
One (1) Outdoor PTZ wall mounted on the West corner,
One (1) Outdoor pole mounted PTZ at the tower to view the building perimeter,
One (1) Outdoor Fixed at the courtroom entry door,
and One (1) Outdoor Fixed to view the unloading parking area.

Furnish and install THHN power cabling from the new cameras to 24VDC power for outdoor camera enclosures.
Furnish and install power supply to power the new cameras heating and cooling for outdoor cameras
Furnish and install CAT 6 cabling from the new cameras to the owner provided Cisco network switch
Furnish, program, and install One (1) 16 channel Video encoder to convert the twelve existing analog CCTV cameras to IP video.
Move the existing analog CCTV coax feeds to the new Video encoder unit
Furnish, program, and install One (1) 16 channel Video encoder and convert the twelve existing analog CCTV cameras to IP video.
Furnish, program, and install One (1) Network Video recorder (NVR) to record both the existing cameras and the five new cameras
Monitoring software is included (Workstation software)
32 IP camera licenses and 5 Workstation Client licenses included
Existing UPS power will be used to power the NVR and Video Encoder units

Exclusions: **FURNISHING AND INSTALLATION OF CONDUIT AND/OR AERIAL CABLING FACILITIES ARE EXCLUDED**
FURNISHING AND INSTALLATION OF UPS POWER IS EXCLUDED
FURNISHING AND INSTALLATION OF CAMERA POE POWER IS EXCLUDED
FURNISHING AND INSTALLATION OF REMOTE WORKSTATION COMPUTER AND MONITORS ARE EXCLUDED
FURNISHING AND INSTALLATION OF POE NETWORK SWITCH IS EXCLUDED

Note: All terms and conditions of Maricopa County Contract No. 13024-S apply
Reference # Contract No. 13024-S Maricopa County/S.A.V.E. Co-op

---

Price Summary:

Materials:	**$18,671.00**
Tax:	**$1,628.11**
Install:	**$11,136.00**
Total This Proposal:	**$31,435.11**

Special Terms: Pricing is valid for a period of 90 days from the date of this proposal
Payment terms are net 30 days from date of invoice
Pricing includes a one-year warranty on parts and labor
Standard freight (ground) is included and is F.O.B. destination

---

Materials List

Job	Qty	Mfg	Part Number	Description	Vendor
Gila County Sheriff - Payson- IP CCTV Upgrade - revised 12-21-16	2	Bosch	NEZ-5230-EPCW4	DAY/NIGHT 50/60HZ CAMERA. OUTDOOR IP 66 PENDANT MOUNT	Bosch
Gila County Sheriff - Payson- IP CCTV Upgrade - revised 12-21-16	2	Bosch	VEZ-A5-WMB	AUTODOME 5000 Wall Mount	Bosch
Gila County Sheriff - Payson- IP CCTV Upgrade - revised 12-21-16	2	Bosch	VG4-A-9541	POLE MOUNT ADAPTER FOR AN AUTODOME IP 5000/7000 PENDANT ARM	Bosch
Gila County Sheriff - Payson- IP CCTV Upgrade - revised 12-21-16	2	Bosch	VDA-AD-JNB	JUNCTION BOX WITHOUT POWER SUPPLY AUTODOME IP 5000 HD AND AUTODOME IP 5000 IR CAMERAS	Bosch
Gila County Sheriff - Payson- IP CCTV Upgrade - revised 12-21-16	1	Bosch	NKN-71027-BA3-20N	OUTDOOR PREPACKAGED CAMERA. DINION 2 MP 1080p. TRUE D/N. WDR. 3.8-13MM. IVA INSTALLED. HSG w/HTR. BLWR. SS. 24VAC. 50/60HZ	Bosch
Gila County Sheriff - Payson- IP CCTV Upgrade - revised 12-21-16	1	Bosch	NKN-71027-BA4-20N	OUTDOOR PREPACKAGED CAMERA. DINION 2MP / 1080p. TRUE D/N. WDR. 9-40MM. IVA INSTALLED. HSG w/HTR. BLWR. SS. 24VAC. 50/60HZ	Bosch
Gila County Sheriff - Payson- IP CCTV Upgrade - revised 12-21-16	1	Bosch	NIN-41012-V3	IP DOME 720P. DAY/NIGHT. 3.3-10MM. IDNR. 12VDC/POE. INDOOR	Bosch
Gila County Sheriff - Payson- IP CCTV Upgrade - revised 12-21-16	1	Bosch	NDA-SMB-MINISMB	SURFACE MOUNT FOR FLEXIDOME IP 4000 / 5000 DOME CAMERAS	Bosch
Gila County Sheriff - Payson- IP CCTV Upgrade - revised 12-21-16	1	Bosch	VJM-4016	VIDEOJET multi 4000 High-performance multi-channel encoder. 16 channels;	Bosch
Gila County Sheriff - Payson- IP CCTV Upgrade - revised 12-21-16	1	Bosch	DIP-7183-4HD	DIVAR IP 7000 VIDEO MANAGEMENT APPLIANCE. 2U RACKMOUNT (8-BAY). RAID-5 16TB (4x4TB). INCLUDES BVMS SERVER/CLIENT/VRM/VSG	Bosch

CONTRACT AGREEMENT

Contract Name: Door Reconstruction for Two Buildings **Contract No.:** ADSPO13-043962 State of Arizona Procurement Office

Statement of Purpose and Need (3-5 Sentences) Copper Building Probation needs a door moved for security reasons with their clients that was not considered during design. Public Works Admin Building doors will be removed and opening will be filled in to make a center opening for just one metal door.

Contract End Date: 04-30-17 **Renewal Option:** ☐ Yes ☒ No

Maximum Dollar Limit: $14,133.35

Contract Information

Firm Name: SD Crane **Contact Person:** Keith Burns

Address: 1901 E University Dr Suite 300 **Phone No:** 480-832-1777

City: Mesa **State:** AZ **Fax:** **Email:**

Special Notes:
Gila County is part of the Arizona State Purchasing Cooperative – Procure AZ, for cooperative purchasing. By using the State contract with SD Crane, it will save the county in both time and money for a rate that already been established in the State of Arizona bidding process.

Authorization to use a Cooperative Purchasing Agreement with the State of Arizona, Contract No. ADSPO11-013788-ez, approved this 16th **day of** February**. 2017.**

GILA COUNTY MANAGER

For John Nelson Jacque Sandus

Statewide General Contracting JOC

GORDIAN ezIQC

www.eziqc.com

Summary Of Costs

JOC Project Name:	**Copper Admin. 2**	
JOC Project Number:	**17-GilaCounty-0003.00**	
Amount of Proposal:	**$14,133.35**	**Purchase Order Amount to Contractor**
Contractor:	**Arizona - SD Crane Builders, Inc.**	

Contractor:

Arizona - SD Crane Builders, Inc.
1901 E University Drive
Suite 330
Mesa, AZ 85203

(480) 832-1777

Statewide JOC Contract

www.eziqc.com

Job Order Contract

Price Proposal Summary - CSI

Date:	January 27, 2017
Contract Number:	ADSPO11-013788-ez
Job Order Number:	17-GilaCounty-0003.00
Job Order Title:	Copper Admin. 2
Contractor:	Arizona - SD Crane Builders, Inc.
Proposal Value:	$14,133.35
Proposal Name:	Copper Admin. 2
Detailed Scope:	New construction to remove existing door and relocate in a new frame.

01 - General Requirements:	**$1,875.06**
06 - Wood, Plastic, and Composites:	**$65.97**
08 - Openings:	**$7,582.51**
09 - Finishes:	**$3,648.24**
26 - Electrical:	**$207.91**
28 - Electronic Safety And Security:	**$753.66**
Proposal Total	**$14,133.35**

This proposal total represents the correct total for the proposal. Any discrepancy between line totals, sub-totals and the proposal total is due to rounding of the line totals and sub-totals.

The Percent of NPP on this Proposal: **46.99%**

Job Order Contract

Price Proposal Detail - CSI

Date: January 27, 2017

Contract Number: ADSPO11-013788-ez
Job Order Number: 17-GilaCounty-0003.00
Job Order Title: Copper Admin. 2
Contractor: Arizona - SD Crane Builders, Inc.
Proposal Value: $14,133.35
Proposal Name: Copper Admin. 2
Adjustment Factor(s) Used: 1.0500-Option 4 - Non Pre-Priced, 1.1760-Option 4 - Owner-Funded Projects Normal Working Hours

Rec#	CSI Number	Mod.	UOM	Description	Line Total
01 - General Requirements					
1	01 22 16 00 0002		EA	Reimbursable FeesNote: Reimbursable Fees will be paid to the contractor for the actual cost of all permits, without mark-up, for which a receipt or bill is received. The Adjustment Factor applied to Reimbursable Fees will be 1.00. The labor cost involved in obtaining all permits is in the Adjustment Factor. The base cost of the Reimbursable Fee is $1.00. The quantity used will adjust the base cost to the actual Reimbursable Fee (e.g. quantity of 125 = $125.00 Reimbursable Fee). If there are multiple Reimbursable Fees, each one shall be listed separately with a comment in the "note" block to identify the Reimbursable Fees (e.g. sidewalk closure, road cut, various permits, extended warrantee, expedited shipping costs, etc.). A copy of each receipt shall be included with the Proposal.	$525.00
			Installation	Quantity 500.00 x Unit Price $1.00 x Factor 1.0500 = Total $525.00	
			User Note:	Builders Risk	
2	01 22 16 00 0002		EA	Reimbursable FeesNote: Reimbursable Fees will be paid to the contractor for the actual cost of all permits, without mark-up, for which a receipt or bill is received. The Adjustment Factor applied to Reimbursable Fees will be 1.00. The labor cost involved in obtaining all permits is in the Adjustment Factor. The base cost of the Reimbursable Fee is $1.00. The quantity used will adjust the base cost to the actual Reimbursable Fee (e.g. quantity of 125 = $125.00 Reimbursable Fee). If there are multiple Reimbursable Fees, each one shall be listed separately with a comment in the "note" block to identify the Reimbursable Fees (e.g. sidewalk closure, road cut, various permits, extended warrantee, expedited shipping costs, etc.). A copy of each receipt shall be included with the Proposal.	$745.59
			Installation	Quantity 710.09 x Unit Price $1.00 x Factor 1.0500 = Total $745.59	
			User Note:	Sales Tax	
3	01 22 20 00 0038		HR	WelderNote: Tasks in the CTC include appropriate costs to cover labor. These items will be requested specifically by the owner for miscellaneous work not covered in the CTC.	$575.68
			Installation	Quantity 8.00 x Unit Price $61.19 x Factor 1.1760 = Total $575.68	
			User Note:	at existing door frame use break metal to flush out the door frame even with the existing door stop. punch and dimple will be done to accomplish the finished look.	
4	01 22 20 00 0038	Mod	HR	For Foreman, Add	$28.79
			Installation	Quantity 8.00 x Unit Price $3.06 x Factor 1.1760 = Total $28.79	
			User Note:	at existing door frame use break metal to flush out the door frame even with the existing door stop. punch and dimple will be done to accomplish the finished look.	

Subtotal for 01 - General Requirements: **$1,875.06**

Price Proposal Detail - CSI Continues..

Job Order Number:
Job Order Title:

Rec#	CSI Number	Mod.	UOM	Description							Line Total
06 - Wood, Plastic, and Composites											
5	06 11 16 00 0057		SF	2"x4" (5cm x 10cm) Wall Framing At 16" On Center							$39.98
					Quantity		Unit Price		Factor		Total
				Installation	40.00	x	$0.85	x	1.1760	=	$39.98
			User Note:	framing for new wall.							
6	06 11 16 00 0057	Mod	SF	For Quantities Up To 200, Add							$12.23
					Quantity		Unit Price		Factor		Total
				Installation	40.00	x	$0.26	x	1.1760	=	$12.23
			User Note:	framing for new wall.							
7	06 11 16 00 0122		LF	2"x4" (5cm x 10cm) Wood Blocking To Wood							$13.76
					Quantity		Unit Price		Factor		Total
				Installation	10.00	x	$1.17	x	1.1760	=	$13.76
			User Note:	new blocking							
Subtotal for 06 - Wood, Plastic, and Composites:											**$65.97**
08 - Openings											
8	08 00 00 00 0119		EA	Custom Door for Gila County Facilities Entrance							$6,641.25
		NPP Task			Quantity		Unit Price		Factor		Total
				Installation	1.00	x	$6,325.00	x	1.0500	=	$6,641.25
			User Note:	New Custom Door.							
9	08 12 13 13 0007		EA	3'x6'-8" Through 7'-2"x4-3/4" Deep Metal Door Frame, 16 Gauge							$224.57
					Quantity		Unit Price		Factor		Total
				Installation	1.00	x	$190.96	x	1.1760	=	$224.57
			User Note:	New Frame							
10	08 12 13 13 0007	Mod	EA	For Welded Frames, Add							$52.92
					Quantity		Unit Price		Factor		Total
				Installation	1.00	x	$45.00	x	1.1760	=	$52.92
			User Note:	Remove and replace new							
11	08 14 16 00 0037		EA	3'x7'x1-3/8" Solid Core, Birch Faced Door							$84.00
		Excludes Material			Quantity		Unit Price		Factor		Total
				Installation	1.00	x	$47.62	x	1.1760	=	$56.00
				Demolition	1.00	x	$23.81	x	1.1760	=	$28.00
			User Note:	Remove and replace							
12	08 71 16 00 0005		PR	4" x 4" Standard Duty, Full Mortise, Plain Bearing, Brass/Bronze, Satin Chrome Finish Hinge							$23.32
		Excludes Material			Quantity		Unit Price		Factor		Total
				Installation	1.00	x	$15.87	x	1.1760	=	$18.66
				Demolition	1.00	x	$3.96	x	1.1760	=	$4.66
			User Note:	Remove and replace							
13	08 71 16 00 0414		EA	4 Wire Concealed Circuit Electric Hinge Option							$165.59
					Quantity		Unit Price		Factor		Total
				Installation	1.00	x	$140.81	x	1.1760	=	$165.59
			User Note:	remove and install new hinge.							

Price Proposal Detail - CSI Continues..

Job Order Number:
Job Order Title:

Rec#	CSI Number	Mod.	UOM	Description	Line Total
08 - Openings					
14	08 71 16 00 2174		EA	Entrance/Office F04 Mortise LocksetNote: Locked with key outside and thumb knob inside.	$269.90

	Quantity		Unit Price		Factor		Total
Installation	1.00	x	$219.59	x	1.1760	=	$258.24
Demolition	1.00	x	$9.92	x	1.1760	=	$11.67

User Note: remove and replace

15	08 71 16 00 2274		EA	Electrified Mortise Lock OptionNote: Excludes the lock. This task is used in conjunction with other locks in the CTC to electrify the lock.	$120.96

	Quantity		Unit Price		Factor		Total
Installation	1.00	x	$102.86	x	1.1760	=	$120.96

User Note: remove and install new. Lock set not included

Subtotal for 08 - Openings: $7,582.51

09 - Finishes

16	09 29 00 00 0005		SF	1/2" Drywall, One Layer, One Face On Wood Or Metal Studs Or Furring	$86.55

	Quantity		Unit Price		Factor		Total
Installation	112.00	x	$0.60	x	1.1760	=	$79.03
Demolition	32.00	x	$0.20	x	1.1760	=	$7.53

User Note: new drywall. Remove 32 SF for new backing to be added.

17	09 29 00 00 0005	Mod	SF	For Quantities Up To 128, Add	$32.93

	Quantity		Unit Price		Factor		Total
Installation	112.00	x	$0.25	x	1.1760	=	$32.93

User Note: new drywall. Remove 32 SF for new backing to be added.

18	09 51 13 00 0018		SF	2' x 2' x 3/4" Mineral Fiber Acoustical Ceiling Panels	$19.40

	Quantity		Unit Price		Factor		Total
Installation	10.00	x	$1.42	x	1.1760	=	$16.70
Demolition	10.00	x	$0.23	x	1.1760	=	$2.70

User Note: Remove and replace

19	09 51 13 00 0018	Mod	SF	For Quantities Up To 50, Add	$4.59

	Quantity		Unit Price		Factor		Total
Installation	10.00	x	$0.39	x	1.1760	=	$4.59

User Note: Remove and replace

20	09 51 13 00 0018	Mod	SF	For Single Angled Tegular Edge (Reveal), Add	$5.64

	Quantity		Unit Price		Factor		Total
Installation	10.00	x	$0.48	x	1.1760	=	$5.64

User Note: Remove and replace

21	09 53 23 00 0003		SF	T Bar Ceilings Suspension System 2'x 2', Standard 15/16"	$23.99

	Quantity		Unit Price		Factor		Total
Installation	10.00	x	$1.84	x	1.1760	=	$21.64
Demolition	10.00	x	$0.20	x	1.1760	=	$2.35

User Note: Remove and replace

22	09 53 23 00 0003	Mod	SF	For Quantities Up To 50, Add	$7.88

	Quantity		Unit Price		Factor		Total
Installation	10.00	x	$0.67	x	1.1760	=	$7.88

User Note: Remove and replace

Price Proposal Detail - CSI Continues..

Job Order Number:
Job Order Title:

Rec#	CSI Number	Mod.	UOM	Description							Line Total
09 - Finishes											
23	09 65 13 13 0007		LF	4" High 1/8" Rubber Base, Group 2 All (Except White)							$72.28
					Quantity		Unit Price		Factor		Total
				Installation	30.00	x	$1.65	x	1.1760	=	$58.21
				Demolition	23.00	x	$0.52	x	1.1760	=	$14.06
		User Note:	Remove and install new.								
24	09 65 13 13 0007	Mod	LF	For Quantities > 20 To 40, Add							$14.11
					Quantity		Unit Price		Factor		Total
				Installation	30.00	x	$0.40	x	1.1760	=	$14.11
		User Note:	Remove and install new.								
25	09 65 19 00 0010		SF	Skid Resistant Surface, Solid Vinyl Floor Tile, 1/8" Thick							$387.37
					Quantity		Unit Price		Factor		Total
				Installation	60.00	x	$5.49	x	1.1760	=	$387.37
		User Note:	new LVT								
26	09 65 19 00 0010	Mod	SF	For Quantities > 40 To 100, Add							$21.87
					Quantity		Unit Price		Factor		Total
				Installation	60.00	x	$0.31	x	1.1760	=	$21.87
		User Note:	new LVT								
27	09 65 19 00 0012		LF	Vinyl Transition Strip, Brown Or Black							$8.64
					Quantity		Unit Price		Factor		Total
				Installation	5.00	x	$1.16	x	1.1760	=	$6.82
				Demolition	5.00	x	$0.31	x	1.1760	=	$1.82
		User Note:	Remove and replace new.								
28	09 65 19 00 0012	Mod	LF	For Quantities Up To 20, Add							$2.06
					Quantity		Unit Price		Factor		Total
				Installation	5.00	x	$0.35	x	1.1760	=	$2.06
		User Note:	Remove and replace new.								
29	09 68 13 00 0006		SY	26 Ounce, Non-Patterned, Nylon Carpet Tile							$18.95
					Quantity		Unit Price		Factor		Total
				Installation	0.00	x	$39.20	x	1.1760	=	$0.00
				Demolition	6.66	x	$2.42	x	1.1760	=	$18.95
		User Note:	Demo existing carpet.								
30	09 91 23 00 0246		LF	Paint Interior Metal Frame And Trim, 1 Coat Primer, Brush/Roller Work							$15.99
					Quantity		Unit Price		Factor		Total
				Installation	34.00	x	$0.40	x	1.1760	=	$15.99
		User Note:	paint 2 frames								
31	09 91 23 00 0248		LF	Paint Interior Metal Frame And Trim, 2 Coats Paint, Brush/Roller Work							$34.79
					Quantity		Unit Price		Factor		Total
				Installation	34.00	x	$0.87	x	1.1760	=	$34.79
		User Note:	paint 2 frames								
32	09 91 43 00 0065		SF	Hot PatchNote: Includes wall patching, prime and paint.							$732.44
					Quantity		Unit Price		Factor		Total
				Installation	38.00	x	$16.39	x	1.1760	=	$732.44
		User Note:	Patching and painting around the new door once installed.								

Price Proposal Detail - CSI Continues..

Job Order Number:
Job Order Title:

Rec#	CSI Number	Mod.	UOM	Description	Line Total
09 - Finishes					
33	09 91 43 00 0065		SF	Hot PatchNote: Includes wall patching, prime and paint.	$2,158.76

	Quantity		Unit Price		Factor		Total
Installation	112.00	x	$16.39	x	1.1760	=	$2,158.76

User Note: For all new drywall and painting due to the small area being done. Painting is included in this line item as well.

Subtotal for 09 - Finishes: **$3,648.24**

26 - Electrical

34 26 05 19 00 0016 — EA — Receptacles, Direct Connected Single, Includes Box — $58.19

	Quantity		Unit Price		Factor		Total
Installation	1.00	x	$49.48	x	1.1760	=	$58.19

User Note: new box for card reader.

35 26 05 19 00 0056 — MLF — #14 AWG Cable - Type THHN-THWN, 600 V Copper, Single Solid, Placed In Conduit — $85.28

	Quantity		Unit Price		Factor		Total
Installation	0.20	x	$273.54	x	1.1760	=	$64.34
Demolition	0.20	x	$89.03	x	1.1760	=	$20.94

User Note: Remove existing wire and run new for new location.

36 26 53 00 00 0010 — EA — Single Face, Thermoplastic Housing, LED Exit Sign/Emergency Light Combo With Battery Back-UpNote: Includes two circular side mounted krypton emergency lights. — $64.44

Excludes Material

	Quantity		Unit Price		Factor		Total
Installation	1.00	x	$40.13	x	1.1760	=	$47.19
Demolition	1.00	x	$14.67	x	1.1760	=	$17.25

User Note: Remove and replace

Subtotal for 26 - Electrical: **$207.91**

28 - Electronic Safety And Security

37 28 13 33 16 0062 — EA — DKS Proximity Card Reader, Exterior Stand Alone Access Controls — $753.66

	Quantity		Unit Price		Factor		Total
Installation	1.00	x	$600.74	x	1.1760	=	$706.47
Demolition	1.00	x	$40.13	x	1.1760	=	$47.19

User Note: Remove and reinstall new.

Subtotal for 28 - Electronic Safety And Security: **$753.66**

Proposal Total **$14,133.35**

This proposal total represents the correct total for the proposal. Any discrepancy between line totals, sub-totals and the proposal total is due to rounding of the line totals and sub-totals.

The Percent of NPP on this Proposal: **46.99%**

AMENDMENT NO. 2 TO SERVICE AGREEMENT NO. 013015-2

The following amendments are hereby incorporated into the contract documents for the below stated project:

PORTABLE TOILET SERVICE

FACILITIES FAIRGROUNDS

Effective February 10, 2015, Gila County and DJ's Companies, Inc. entered into a contract whereby DJ's Companies, Inc. agreed to provide Porta Jon Service to the Gila County Facilities Fairgrounds.

Amendment No. 1 to Service Agreement 013015-2 was executed on March 02, 2016 extending the term of the service agreement from February 10, 2016 to February 09, 2017.

The contract expires February 09, 2017. Per page 6, **Article 14 – Term** of the contract, the County shall have the right to renew the contract for two (2) additional one (1) year periods.

Amendment No. 2 to Service Agreement 013015-2 will allow for Gila County to exercise the option to renew the term of the agreement for one (1) one (1) year term, from February 10, 2017 to February 09, 2018.

Contractor will continue to bill for services pursuant to the Fee and Schedule of the original Service Agreement, but in no event shall charges for the February 10, 2016 to February 09, 2017 extension exceed $2,392.00 without prior written agreement of the County.

All other terms and conditions of the original agreement, including previously executed Amendments, shall remain in full force and affect during the February 10, 2017 to February 09, 2018 term of the contract.

IN WITNESS WHEREOF, two (2) identical counterparts of this amendment, each which shall include original signatures and for all purposes be deemed an original thereof, have been duly executed by the parties hereinabove named, on this 16th day of February, 2017.

GILA COUNTY

For Jacque Sandus
John Nelson, County Manager

DJ'S COMPANIES, INC.

Darlene Jonovich
Authorized Signature

Darlene Jonovich
Print Name

AMENDMENT NO. 1

The following amendments are hereby incorporated into the agreement for the below project

---

SERVICE AGREEMENT NO. 112916

RAIN GUTTERS REPLACEMENT ON GUERRERO BUILDING

Effective December 21, 2016, Gila County and BKB Services entered into a contract whereby BKB Services agreed to provide Rain Gutter Replacement on the Guerrero Building.

The contract term expires on January 30, 2017. The Facilities Department would like to extend the term of the contract to February 28, 2017 due to needed time for completion.

Amendment No. 1 to Service Agreement No. 112916 will serve to extend the term of the contract to February 28, 2017.

All other terms, conditions and provisions of the original Contract, shall remain the same and apply during the December 21, 2016 to February 28, 2017 contract term.

IN WITNESS WHEREOF, two (2) identical copies of this amendment, each which shall include original signatures and for all purposes be deemed an original thereof, have been duly executed by the parties hereinabove named, on this 16th day of February, 2017.

GILA COUNTY

Jacque Sandus

For **John Nelson, County Manager**

BKB SERVICES

Bart R Byrne

Signature

BART R. BYRNE

Print Name

Tommie C. Martin, District I
610 E. Highway 260 Payson, AZ. 85547
(928) 474-2029

Timothy Humphrey, District II
1400 E. Ash St. Globe, AZ. 85501
(928) 425-3231 Ext. 8753

Woody Cline, District III
1400 E. Ash St. Globe, AZ. 85501
(928) 425-3231 Ext. 8511

GILA COUNTY
www.gilacountyaz.gov

John Nelson., County Manager
Phone (928) 425-3231 Ext.8761

James Menlove, Finance Director
Phone (928) 425-3231 Ext. 8743

1400 E. Ash Street
Globe, AZ 85501

SERVICE AGREEMENT NO. 020317

WINDOW TINT FOR FINANCE WINDOWS

FACILITIES MANAGEMENT

THIS AGREEMENT, made and entered into this 16th day of February, **2017**, by and between Gila County, a political subdivision of the State of Arizona hereinafter designated the County, and Kino Floors & Interiors, LLC, of the City of Globe, State of Arizona, hereinafter designated the Contractor.

WITNESSETH: The Contractor, for and in consideration of the sum to be paid him by the County, in the manner and at the time hereinafter provided, and of the other covenants and agreement's herein contained, hereby agrees, for himself, his heirs, administrators, successors, and assigns as follows:

ARTICLE 1 – SCOPE OF SERVICES: The Contractor shall provide the services and products listed in the Scope of Work below and shall do so in a good, workmanlike and substantial manner and to the satisfaction of the County under the direction of the **Facilities Management** or designee.

All work performed by the Contractor shall be completed to local codes and regulation per Gila County and the State of Arizona and consistent with all Gila County guidelines.

Scope of Work: Refer to attached Attachment "A" to **Service Agreement 020317** by mention made a binding part of this agreement as set forth herein.

Contractor Fee's: Refer to Attachment "A" to **Service Agreement 020317** by mention made a binding part of this agreement as set forth herein. To the extent that the terms and conditions of this Service Agreement conflict with the Terms and Conditions of Attachment "A" to **Service Agreement 020317**, the terms and conditions of this service agreement will prevail and govern the contractual relationship between the parties.

ARTICLE 2 – TERMINATION: The County reserves the right to terminate the Contract, in whole or in part at any time, when in the best interest of the County, without penalty or recourse. Upon receipt of the written notice, the Contractor shall stop all work as directed in the notice. If the contract is terminated, the County shall be liable only for the services rendered under this contract and accepted material received by the County before the effective date of termination.

ARTICLE 3 - INDEMNIFICATION: Contractor shall indemnify, defend, save and hold harmless the County of Gila and its officers, officials, agents, and employees (hereinafter referred to as "Indemnitee") from and against any and all claims, actions, liabilities, damages, losses, or expenses (including court costs, attorneys' fees, and costs of claim processing, investigation and litigation) (hereinafter referred to as "Claims") for bodily injury or personal injury (including death), or loss or damage to tangible or intangible property caused, or alleged to be caused, in whole or in part, by the negligent or willful acts or omissions of Contractor or any of its owners, officers, directors, agents, employees or subcontractors. This indemnity includes any claim or amount arising out of or recovered under the Workers' Compensation Law or arising out of the failure of such contractor to conform to any federal, state or local law, statute, ordinance, rule, regulation or court decree. It is the specific intention of the parties that the Indemnitee shall, in all instances, except for Claims arising solely from the negligent or willful acts or omissions of the Indemnitee, be indemnified by Contractor from and against any and all claims. It is agreed that Contractor will be responsible for primary loss investigation, defense and judgment costs where this indemnification is applicable. In consideration of the award of this contract, the Contractor agrees to waive all rights of subrogation against the County, its officers, officials, agents and employees for losses arising from the work performed by the Contractor for the County.

ARTICLE 4 – INSURANCE REQUIREMENTS: Contractor and subcontractors shall procure and maintain until all of their obligations have been discharged, including any warranty periods under this Contract are satisfied, insurance against claims for injury to persons or damage to property which may arise from or in connection with the performance of the work hereunder by the Contractor, his agents, representatives, employees or subcontractors.

The insurance requirements herein are minimum requirements for this Contract and in no way limit the indemnity covenants contained in this Contract. The County in no way warrants that the minimum limits contained herein are sufficient to protect the Contractor from liabilities that might arise out of the performance of the work under this contract by the Contractor, his agents, representatives, employees or subcontractors and Contractor is free to purchase additional insurance as may be determined necessary.

A. **MINIMUM SCOPE AND LIMITS OF INSURANCE:** Contractor shall provide coverage with limits of liability not less than those stated below.

1. **Commercial General Liability – Occurrence Form**
   Policy shall include bodily injury, property damage and broad form contractual liability coverage.
   - General Aggregate $2,000,000
   - Products – Completed Operations Aggregate $1,000,000
   - Personal and Advertising Injury $1,000,000
   - Each Occurrence $1,000,000

   a. The policy shall be endorsed to include the following additional insured language: **"The County of Gila shall be named as an additional insured with respect to liability arising out of the activities performed by, or on behalf of the Contractor".**

2. **Worker's Compensation and Employers' Liability**

Workers' Compensation	Statutory
Employers' Liability	
Each Accident	$100,000
Disease – Each Employee	$100,000
Disease – Policy Limit	$500,000

   a. Policy shall contain a **waiver of subrogation** against the County of Gila.

3. **Automobile Liability**
Bodily injury and property damage for any owned, hired, and non-owned vehicles used in the performance of this Contract.

Combined Single Limit (CSL)	$1,000,000

a. The policy shall be endorsed to include the following additional insured language:
The County of Gila shall be named as additional insured with respect to liability arising out of the activities performed by, or on behalf of the Contractor, including automobiles owned, leased, hired or borrowed by the Contractor".

4. **Professional Liability (Errors and Omissions Liability)**

Each Claim	$1,000,000
Annual Aggregate	$2,000,000

a. In the event that the professional liability insurance required by this Contract is written on a claims-made basis, Contractor warrants that any retroactive date under the policy shall precede the effective date of this Contract; and that either continuous coverage will be maintained or an extended discovery period will be exercised for a period of two (2) years beginning at the time work under this Contract is completed.

B. **ADDITIONAL INSURANCE REQUIREMENTS:** The policies shall include, or be endorsed to include, the following provisions:

1. On insurance policies where the County of Gila is named as an additional insured, the County of Gila shall be an additional insured to the full limits of liability purchased by the Contractor even if those limits of liability are in excess of those required by this Contract.
2 The Contractor's insurance coverage shall be primary insurance and non-contributory with respect to all other available sources.
3. Coverage provided by the Contractor shall not be limited to the liability assumed under the indemnification provisions of this Contract.

C. **NOTICE OF CANCELLATION:** Each insurance policy required by the insurance provisions of this Contract shall provide the required coverage and shall not be suspended, voided, canceled, reduced in coverage or endorsed to lower limits except after thirty (30) days prior written notice has been given to the County. Such notice shall be sent directly to **Gila County Purchasing Department, 1400 E. Ash St., Globe, AZ, 85501** or and shall be sent by certified mail, return receipt requested.

D. **ACCEPTABILITY OF INSURERS:** Insurance is to be placed with insurers duly licensed in the State of Arizona or which hold approved non-admitted status on the Arizona Department of Insurance List of Qualified Unauthorized Insurers and with an "A.M. Best" rating of not less than B+ VI. The County in no way warrants that the above-required minimum insurer rating is sufficient to protect the Contractor from potential insurer insolvency.

E. **VERIFICATION OF COVERAGE:** Contractor shall furnish the County with certificates of insurance (ACORD form or equivalent approved by the County) as required by this Contract. The certificates for each insurance policy are to be signed by a person authorized by that insurer to bind coverage on its behalf.

All certificates and endorsements are to be received and approved by the County before work commences. Each insurance policy required by this Contract must be in effect at or prior to commencement of work under this Contract and remain in effect for the duration of the project. Failure to maintain the insurance policies as required by this Contract or to provide evidence of renewal is a material breach of contract.

All certificates required by this Contract shall be sent directly to **Gila County Purchasing Department, 1400 E. Ash St., Globe, AZ, 85501** or email to bhurst@gilacountyaz.gov. The County project/contract number and project description shall be noted on the certificate of insurance. The County reserves the right to require complete, certified copies of all insurance policies required by this Contract at any time.

F. **SUBCONTRACTORS:** Contractors' certificate(s) shall include all subcontractors as additional insured's under its policies **or** Contractor shall furnish to the County separate certificates and endorsements for each subcontractor. All coverage's for subcontractors shall be subject to the minimum requirements identified above.

G. **APPROVAL:** Any modification or variation from the insurance requirements in this Contract shall be made by the County Attorney, whose decision shall be final. Such action will not require a formal Contract amendment, but may be made by administrative action.

ARTICLE 5 – LEGAL ARIZONA WORKERS ACT COMPLIANCE: Contractor hereby warrants that it will at all times during the term of this Contract comply with all federal immigration laws applicable to Contractor's employment of its employees, and with the requirements of A.R.S. § 23-214 (A) (together the "State and Federal Immigration Laws"). Contractor shall further ensure that each subcontractor who performs any work for Contractor under this contract likewise complies with the State and Federal Immigration Laws. County shall have the right at any time to inspect the books and records of Contractor and any subcontractor in order to verify such party's compliance with the State and Federal Immigration Laws.

Any breach of Contractor's or any subcontractor's warranty of compliance with the State and Federal Immigration Laws, or of any other provision of this section, shall be deemed to be a material breach of this Contract subjecting Contractor to penalties up to and including suspension or termination of this Contract. If the breach is by a subcontractor, and the subcontract is suspended or terminated as a result, Contractor shall be required to take such steps as may be necessary to either self-perform the services that would have been provided under the subcontract or retain a replacement subcontractor as soon as possible so as not to delay project completion.

Contractor shall advise each subcontractor of County's rights, and the subcontractor's obligations, under this Article by including a provision in each subcontract substantially in the following form: "Subcontractor hereby warrants that it will at all times during the term of this contract comply with all federal immigration laws applicable to Subcontractor's employees, and with the requirements of A.R.S. § 23-214 (A). Subcontractor further agrees that County may inspect the Subcontractor's books and records to insure that Subcontractor is in compliance with these requirements. Any breach of this paragraph by Subcontractor will be deemed to be a material breach of this contract subjecting Subcontractor to penalties up to and including suspension or termination of this contract."

Any additional costs attributable directly or indirectly to remedial action under this Article shall be the responsibility of Contractor. In the event that remedial action under this Article results in delay to one or more tasks on the critical path of Contractor's approved construction or critical milestones schedule, such period of delay shall be deemed excusable delay for which Contractor shall be entitled to an extension of time, but not costs.

ARTICLE 6 – ISRAEL BOYCOTT CERTIFICATION: Contractor hereby certifies that it is not currently engaged in and will not, for the duration of this agreement, engage in a boycott of Israel as defined by A.R.S. § 35-393.01. Violation of this certification by Contractor may result in action by County up to and including termination of this agreement.

ARTICLE 7 - WARRANTY: Contractor expressly warrants that all goods or services furnished under this agreement shall conform to all specifications and appropriate standards, will be new, and will be free from defects in material or workmanship. Contractor warrants that all such goods or services will conform to any statements made on the containers or labels or advertisements for such goods, or services, and that any goods will be adequately contained, packaged, marked and labeled. Contractor warrants that all goods or services furnished hereunder will be merchantable, and will be safe and appropriate for the purpose for which goods or services of that kind are normally used. If Contractor knows or has reason to know the particular purpose for which County intends to use the goods or services, Contractor warrants that such goods or services will be fit for such particular purpose. Contractor warrants that goods or services furnished will conform in all respects to samples. Inspection, test, acceptance of use of the goods or services furnished hereunder shall not affect the Contractor's obligation under this warranty, and such warranties shall survive inspection, test, acceptance and use. Contractor's warranty shall run to County, its successors, and assigns. Contractor agrees to replace or correct, at Contractor's sole cost and expense, defects of any goods or services not conforming to the foregoing warranty, or improperly installed, as well as guarantee to the County and to the Owner, against liability, losses or damage to any or all parts of the work arising from said installation during a period of two (2) years from date of completion. All guarantees will inure to the benefit of the County and the Owner, their successors or assigns, including equipment warranties, ordinary wear and tear and unusual abuse or neglect excepted.

In the event of failure of Contractor to correct defects in or replace nonconforming goods or services promptly, County, after reasonable notice to Contractor, may make such corrections or replace such goods and services and charge Contractor for the cost incurred by the County in doing so. Contractor recognizes that County's requirements may require immediate repairs in reworking of defective goods, without notice to the Contractor. In such event, Contractor shall reimburse County for those costs, delays, or other damages which County has incurred.

ARTICLE 8 - LAWS AND ORDINANCES: This agreement shall be enforced under the laws of the State of Arizona. Contractor shall maintain in current status all Federal, State and Local licenses and permits required for the operation of the business conducted by the Contractor. The Contractor shall comply with the applicable provisions of the Americans with Disabilities Act (Public Law 101-336, 42 U.S.C. 12101-12213) and applicable federal regulations under the Act.

ARTICLE 9 - CANCELLATION: This agreement is subject to cancellation pursuant to A.R.S. §38-511. If the Agreement is terminated, the county shall be liable only for payment for services rendered and accepted material received by the County before the effective date of termination.

ARTICLE 10 - RELATIONSHIP OF THE PARTIES: Contractor is an independent contractor of the County. Contractor represents that he has or will secure, at his own expense, all personnel required in performing the services under this contract. Such personnel shall not be employees of or have any contractual relationship with the County. All personnel engaged in work under this contract shall be fully qualified and shall be authorized or permitted under State and local law to perform such services. Contractor warrants that he has obtained or will obtain Worker's Compensation Insurance for his employees working on this contract and that any subcontractors will likewise obtain Worker's Compensation Insurance for of their employees working on this contract. It is further agreed by Contractor that he shall obey all state and federal statutes, rules, and regulations which are applicable to provisions of the services called for herein. Neither Contractor nor any employee of the Contractor shall be deemed an officer, employee, or agent of the County.

ARTICLE 11 – NON-APPROPRIATIONS CLAUSE: Contractor acknowledges that the County is a governmental entity, and the contract validity is based upon the availability of public funding under its authority. In the event that public funds are unavailable and not appropriated for the performance of County's obligations under this contract, then this contract shall automatically expire without penalty to County after written notice to Contractor of the unavailability and non-appropriation of public funds.

It is expressly agreed that the County shall only activate this non-appropriation provision as an emergency fiscal measure. The County shall not activate this non-appropriation provision for its convenience, to circumvent the requirements of this contract, or to enable the County to contract with another Contractor for the same supplies or services covered under this Addendum.

ARTICLE 12– ENTIRE CONTRACT CLAUSE: The Contractor and the County have read this Contract and agree to be bound by all of its terms, and further agree that it constitutes the entire contract between the two parties and may only be modified by a written mutual contract signed by the parties. No oral agreement or oral provision outside this Contract shall have any force or effect.

ARTICLE 13 – NON-WAIVER OF ENFORCEABILITY: Failure of the County to enforce, at any time, any of the provisions of this Contract, or to request at any time performance by Contractor of any of the provisions hereof, shall in no way be construed to be a waiver of such provisions, nor in any way affect the validity of this contract or any part thereof, or the right of the County to enforce each and every provision

ARTICLE 14 – GOVERNING LAW: Both parties agree that this Contract shall be governed by the laws of the state of Arizona. The parties further agree that the jurisdiction for any legal disputes arising out of this Contract shall be the Superior Court of the State of Arizona. The parties agree that even if this Contract does not specifically reference any provision required by state or federal law, those state and federally required provisions are incorporated into this Contract by this reference as though they were specifically listed herein.

ARTICLE 15– TERM: The Contract commences on the date it is signed by the County Manager and remains in effect through March 15, 2017.

ARTICLE 16 – PAYMENT/BILLING: Contractor shall be paid an amount not to exceed $416.43 for completion of the projects as outlined in the Scope of Services.

All invoices shall be submitted to Gila County Accounts Payable, 1400 E. Ash St., Globe, Arizona and include the following information:

- Purchase Order Number
- Contract Number
- Invoice Number
- Service Location
- Vendor Name and Address
- Description of Service

Any alterations to the scope of work resulting in a change in cost must have prior written approval by the County. Any unauthorized work may result in non-payment to the vendor.

Gila County employs a "Net 15" payment term for services meaning the payment will be issued fifteen (15) days from the date the County receives the invoice from the Contractor. Purchase orders sent to the Contractor reflect these terms and conditions.

The Contractor shall have a current I.R.S. W-9 form on file with the County unless not required by law. The County shall not remit payment if the Contractor does not have a current W-9.

IN WITNESS WHEREOF, Service Agreement No. 020317 has been duly executed by the parties hereinabove named, on the date and year first above written.

GILA COUNTY

Jacque Sanders

John Nelson, County Manager

Date: 2-16-17

KINO FLOORS & INTERIORS, LLC

Signature

DALE FLETCHER

Print Name

EST. QUOTE

KINO FLOORS & INTERIORS, LLC
401 North Broad Street
GLOBE, ARIZONA 85501
Phone (928) 425-9443
Fax (928) 425-6249

SOLD BY: Dave
DATE: 1-5-17
NAME: Gila County Public Works
ADDRESS: 745 N. Rose Mofford Way
PHONE: 402 4668
CITY: Globe AZ 85501

☐ CASH ☑ CHARGE ☐ MERCHANDISE RETURNED
☐ C.O.D. ☐ PAID OUT ☐ PAID ON ACCOUNT

QTY.		DESCRIPTION	PRICE	AMOUNT
	1	window TINT ON		
	2	DOORS AT FINANC Dept		
	3	AT copper admin. Build.		
	4			
	5	MATERIALS		225 00
	6	LABOR		167 86
	7			392 86
	8	5/7%		23 57
	9	TOTAL		416 43
	10			
	11			
	12	6880.341.102.600-4300.60 FM-0103		
	13			
	14			
	15			
	16			

RECEIVED BY: TOTAL

THANK YOU

27911

Tommie C. Martin, District I
610 E. Highway 260 Payson, AZ. 85547
(928) 474-2029

Timothy Humphrey, District II
1400 E. Ash St. Globe, AZ. 85501
(928) 425-3231 Ext. 8753

Woody Cline, District III
1400 E. Ash St. Globe, AZ. 85501
(928) 425-3231 Ext. 8511

GILA COUNTY
www.gilacountyaz.gov

John Nelson, County Manager
Phone (928) 425-3231 Ext.8761

James Menlove, Finance Director
Phone (928) 425-3231 Ext. 8743

1400 E. Ash Street
Globe, AZ 85501

SERVICE AGREEMENT NO. 020417

REPLACE LOCKS ON GUN LOCKERS

SHERIFF'S OFFICE

THIS AGREEMENT, made and entered into this 16th day of February, **2017,** by and between Gila County, a political subdivision of the State of Arizona hereinafter designated the County, and AAA Lock Service, of the City of Globe, State of Arizona, hereinafter designated the Contractor.

WITNESSETH: The Contractor, for and in consideration of the sum to be paid him by the County, in the manner and at the time hereinafter provided, and of the other covenants and agreement's herein contained, hereby agrees, for himself, his heirs, administrators, successors, and assigns as follows:

ARTICLE 1 – SCOPE OF SERVICES: The Contractor shall provide the services and products listed in the Scope of Work below and shall do so in a good, workmanlike and substantial manner and to the satisfaction of the County under the direction of the **Sheriff's Office** or designee.

All work performed by the Contractor shall be completed to local codes and regulation per Gila County and the State of Arizona and consistent with all Gila County guidelines.

Scope of Work: Refer to attached Attachment "A" to **Service Agreement 020417** by mention made a binding part of this agreement as set forth herein.

Contractor Fee's: Refer to Attachment "A" to **Service Agreement 020417** by mention made a binding part of this agreement as set forth herein. To the extent that the terms and conditions of this Service Agreement conflict with the Terms and Conditions of Attachment "A" to **Service Agreement 020417**, the terms and conditions of this service agreement will prevail and govern the contractual relationship between the parties.

ARTICLE 2 – TERMINATION: The County reserves the right to terminate the Contract, in whole or in part at any time, when in the best interest of the County, without penalty or recourse. Upon receipt of the written notice, the Contractor shall stop all work as directed in the notice. If the contract is terminated, the County shall be liable only for the services rendered under this contract and accepted material received by the County before the effective date of termination.

ARTICLE 3 - INDEMNIFICATION: Contractor shall indemnify, defend, save and hold harmless the County of Gila and its officers, officials, agents, and employees (hereinafter referred to as "Indemnitee") from and against any and all claims, actions, liabilities, damages, losses, or expenses (including court costs, attorneys' fees, and costs of claim processing, investigation and litigation) (hereinafter referred to as "Claims") for bodily injury or personal injury (including death), or loss or damage to tangible or intangible property caused, or alleged to be caused, in whole or in part, by the negligent or willful acts or omissions of Contractor or any of its owners, officers, directors, agents, employees or subcontractors. This indemnity includes any claim or amount arising out of or recovered under the Workers' Compensation Law or arising out of the failure of such contractor to conform to any federal, state or local law, statute, ordinance, rule, regulation or court decree. It is the specific intention of the parties that the Indemnitee shall, in all instances, except for Claims arising solely from the negligent or willful acts or omissions of the Indemnitee, be indemnified by Contractor from and against any and all claims. It is agreed that Contractor will be responsible for primary loss investigation, defense and judgment costs where this indemnification is applicable. In consideration of the award of this contract, the Contractor agrees to waive all rights of subrogation against the County, its officers, officials, agents and employees for losses arising from the work performed by the Contractor for the County.

ARTICLE 4 - INSURANCE REQUIREMENTS: Contractor and subcontractors shall procure and maintain until all of their obligations have been discharged, including any warranty periods under this Contract are satisfied, insurance against claims for injury to persons or damage to property which may arise from or in connection with the performance of the work hereunder by the Contractor, his agents, representatives, employees or subcontractors.

The insurance requirements herein are minimum requirements for this Contract and in no way limit the indemnity covenants contained in this Contract. The County in no way warrants that the minimum limits contained herein are sufficient to protect the Contractor from liabilities that might arise out of the performance of the work under this contract by the Contractor, his agents, representatives, employees or subcontractors and Contractor is free to purchase additional insurance as may be determined necessary.

A. **MINIMUM SCOPE AND LIMITS OF INSURANCE:** Contractor shall provide coverage with limits of liability not less than those stated below.

1. **Commercial General Liability - Occurrence Form**
   Policy shall include bodily injury, property damage and broad form contractual liability coverage.

• General Aggregate	$2,000,000
• Products - Completed Operations Aggregate	$1,000,000
• Personal and Advertising Injury	$1,000,000
• Each Occurrence	$1,000,000

   a. The policy shall be endorsed to include the following additional insured language: **"The County of Gila shall be named as an additional insured with respect to liability arising out of the activities performed by, or on behalf of the Contractor".**

2. **Worker's Compensation and Employers' Liability**

Workers' Compensation	Statutory
Employers' Liability	
Each Accident	$100,000
Disease - Each Employee	$100,000
Disease - Policy Limit	$500,000

   a. Policy shall contain a **waiver of subrogation** against the County of Gila.

3. **Automobile Liability**
Bodily injury and property damage for any owned, hired, and non-owned vehicles used in the performance of this Contract.

Combined Single Limit (CSL)	$1,000,000

a. The policy shall be endorsed to include the following additional insured language:
The County of Gila shall be named as additional insured with respect to liability arising out of the activities performed by, or on behalf of the Contractor, including automobiles owned, leased, hired or borrowed by the Contractor".

4. **Professional Liability (Errors and Omissions Liability)**

Each Claim	$1,000,000
Annual Aggregate	$2,000,000

a. In the event that the professional liability insurance required by this Contract is written on a claims-made basis, Contractor warrants that any retroactive date under the policy shall precede the effective date of this Contract; and that either continuous coverage will be maintained or an extended discovery period will be exercised for a period of two (2) years beginning at the time work under this Contract is completed.

B. **ADDITIONAL INSURANCE REQUIREMENTS:** The policies shall include, or be endorsed to include, the following provisions:

1. On insurance policies where the County of Gila is named as an additional insured, the County of Gila shall be an additional insured to the full limits of liability purchased by the Contractor even if those limits of liability are in excess of those required by this Contract.
2 The Contractor's insurance coverage shall be primary insurance and non-contributory with respect to all other available sources.
3. Coverage provided by the Contractor shall not be limited to the liability assumed under the indemnification provisions of this Contract.

C. **NOTICE OF CANCELLATION:** Each insurance policy required by the insurance provisions of this Contract shall provide the required coverage and shall not be suspended, voided, canceled, reduced in coverage or endorsed to lower limits except after thirty (30) days prior written notice has been given to the County. Such notice shall be sent directly to **Gila County Purchasing Department, 1400 E. Ash St., Globe, AZ, 85501** or and shall be sent by certified mail, return receipt requested.

D. **ACCEPTABILITY OF INSURERS:** Insurance is to be placed with insurers duly licensed in the State of Arizona or which hold approved non-admitted status on the Arizona Department of Insurance List of Qualified Unauthorized Insurers and with an "A.M. Best" rating of not less than B+ VI. The County in no way warrants that the above-required minimum insurer rating is sufficient to protect the Contractor from potential insurer insolvency.

E. **VERIFICATION OF COVERAGE:** Contractor shall furnish the County with certificates of insurance (ACORD form or equivalent approved by the County) as required by this Contract. The certificates for each insurance policy are to be signed by a person authorized by that insurer to bind coverage on its behalf.

All certificates and endorsements are to be received and approved by the County before work commences. Each insurance policy required by this Contract must be in effect at or prior to commencement of work under this Contract and remain in effect for the duration of the project. Failure to maintain the insurance policies as required by this Contract or to provide evidence of renewal is a material breach of contract.

All certificates required by this Contract shall be sent directly to **Gila County Purchasing Department, 1400 E. Ash St., Globe, AZ, 85501** or email to bhurst@gilacountyaz.gov. The County project/contract number and project description shall be noted on the certificate of insurance. The County reserves the right to require complete, certified copies of all insurance policies required by this Contract at any time.

F. **SUBCONTRACTORS:** Contractors' certificate(s) shall include all subcontractors as additional insured's under its policies **or** Contractor shall furnish to the County separate certificates and endorsements for each subcontractor. All coverage's for subcontractors shall be subject to the minimum requirements identified above.

G. **APPROVAL:** Any modification or variation from the insurance requirements in this Contract shall be made by the County Attorney, whose decision shall be final. Such action will not require a formal Contract amendment, but may be made by administrative action.

ARTICLE 5 – LEGAL ARIZONA WORKERS ACT COMPLIANCE: Contractor hereby warrants that it will at all times during the term of this Contract comply with all federal immigration laws applicable to Contractor's employment of its employees, and with the requirements of A.R.S. § 23-214 (A) (together the "State and Federal Immigration Laws"). Contractor shall further ensure that each subcontractor who performs any work for Contractor under this contract likewise complies with the State and Federal Immigration Laws. County shall have the right at any time to inspect the books and records of Contractor and any subcontractor in order to verify such party's compliance with the State and Federal Immigration Laws.

Any breach of Contractor's or any subcontractor's warranty of compliance with the State and Federal Immigration Laws, or of any other provision of this section, shall be deemed to be a material breach of this Contract subjecting Contractor to penalties up to and including suspension or termination of this Contract. If the breach is by a subcontractor, and the subcontract is suspended or terminated as a result, Contractor shall be required to take such steps as may be necessary to either self-perform the services that would have been provided under the subcontract or retain a replacement subcontractor as soon as possible so as not to delay project completion.

Contractor shall advise each subcontractor of County's rights, and the subcontractor's obligations, under this Article by including a provision in each subcontract substantially in the following form: "Subcontractor hereby warrants that it will at all times during the term of this contract comply with all federal immigration laws applicable to Subcontractor's employees, and with the requirements of A.R.S. § 23-214 (A). Subcontractor further agrees that County may inspect the Subcontractor's books and records to insure that Subcontractor is in compliance with these requirements. Any breach of this paragraph by Subcontractor will be deemed to be a material breach of this contract subjecting Subcontractor to penalties up to and including suspension or termination of this contract."

Any additional costs attributable directly or indirectly to remedial action under this Article shall be the responsibility of Contractor. In the event that remedial action under this Article results in delay to one or more tasks on the critical path of Contractor's approved construction or critical milestones schedule, such period of delay shall be deemed excusable delay for which Contractor shall be entitled to an extension of time, but not costs.

ARTICLE 6 – ISRAEL BOYCOTT CERTIFICATION: Contractor hereby certifies that it is not currently engaged in and will not, for the duration of this agreement, engage in a boycott of Israel as defined by A.R.S. § 35-393.01. Violation of this certification by Contractor may result in action by County up to and including termination of this agreement.

ARTICLE 7 - WARRANTY: Contractor expressly warrants that all goods or services furnished under this agreement shall conform to all specifications and appropriate standards, will be new, and will be free from defects in material or workmanship. Contractor warrants that all such goods or services will conform to any statements made on the containers or labels or advertisements for such goods, or services, and that any goods will be adequately contained, packaged, marked and labeled. Contractor warrants that all goods or services furnished hereunder will be merchantable, and will be safe and appropriate for the purpose for which goods or services of that kind are normally used. If Contractor knows or has reason to know the particular purpose for which County intends to use the goods or services, Contractor warrants that such goods or services will be fit for such particular purpose. Contractor warrants that goods or services furnished will conform in all respects to samples. Inspection, test, acceptance of use of the goods or services furnished hereunder shall not affect the Contractor's obligation under this warranty, and such warranties shall survive inspection, test, acceptance and use. Contractor's warranty shall run to County, its successors, and assigns. Contractor agrees to replace or correct, at Contractor's sole cost and expense, defects of any goods or services not conforming to the foregoing warranty, or improperly installed, as well as guarantee to the County and to the Owner, against liability, losses or damage to any or all parts of the work arising from said installation during a period of two (2) years from date of completion. All guarantees will inure to the benefit of the County and the Owner, their successors or assigns, including equipment warranties, ordinary wear and tear and unusual abuse or neglect excepted.

In the event of failure of Contractor to correct defects in or replace nonconforming goods or services promptly, County, after reasonable notice to Contractor, may make such corrections or replace such goods and services and charge Contractor for the cost incurred by the County in doing so. Contractor recognizes that County's requirements may require immediate repairs in reworking of defective goods, without notice to the Contractor. In such event, Contractor shall reimburse County for those costs, delays, or other damages which County has incurred.

ARTICLE 8 - LAWS AND ORDINANCES: This agreement shall be enforced under the laws of the State of Arizona. Contractor shall maintain in current status all Federal, State and Local licenses and permits required for the operation of the business conducted by the Contractor. The Contractor shall comply with the applicable provisions of the Americans with Disabilities Act (Public Law 101-336, 42 U.S.C. 12101-12213) and applicable federal regulations under the Act.

ARTICLE 9 - CANCELLATION: This agreement is subject to cancellation pursuant to A.R.S. §38-511. If the Agreement is terminated, the county shall be liable only for payment for services rendered and accepted material received by the County before the effective date of termination.

ARTICLE 10 - RELATIONSHIP OF THE PARTIES: Contractor is an independent contractor of the County. Contractor represents that he has or will secure, at his own expense, all personnel required in performing the services under this contract. Such personnel shall not be employees of or have any contractual relationship with the County. All personnel engaged in work under this contract shall be fully qualified and shall be authorized or permitted under State and local law to perform such services. Contractor warrants that he has obtained or will obtain Worker's Compensation Insurance for his employees working on this contract and that any subcontractors will likewise obtain Worker's Compensation Insurance for of their employees working on this contract. It is further agreed by Contractor that he shall obey all state and federal statutes, rules, and regulations which are applicable to provisions of the services called for herein. Neither Contractor nor any employee of the Contractor shall be deemed an officer, employee, or agent of the County.

ARTICLE 11 - NON-APPROPRIATIONS CLAUSE: Contractor acknowledges that the County is a governmental entity, and the contract validity is based upon the availability of public funding under its authority. In the event that public funds are unavailable and not appropriated for the performance of County's obligations under this contract, then this contract shall automatically expire without penalty to County after written notice to Contractor of the unavailability and non-appropriation of public funds.

It is expressly agreed that the County shall only activate this non-appropriation provision as an emergency fiscal measure. The County shall not activate this non-appropriation provision for its convenience, to circumvent the requirements of this contract, or to enable the County to contract with another Contractor for the same supplies or services covered under this Addendum.

ARTICLE 12- ENTIRE CONTRACT CLAUSE: The Contractor and the County have read this Contract and agree to be bound by all of its terms, and further agree that it constitutes the entire contract between the two parties and may only be modified by a written mutual contract signed by the parties. No oral agreement or oral provision outside this Contract shall have any force or effect.

ARTICLE 13 - NON-WAIVER OF ENFORCEABILITY: Failure of the County to enforce, at any time, any of the provisions of this Contract, or to request at any time performance by Contractor of any of the provisions hereof, shall in no way be construed to be a waiver of such provisions, nor in any way affect the validity of this contract or any part thereof, or the right of the County to enforce each and every provision

ARTICLE 14 - GOVERNING LAW: Both parties agree that this Contract shall be governed by the laws of the state of Arizona. The parties further agree that the jurisdiction for any legal disputes arising out of this Contract shall be the Superior Court of the State of Arizona. The parties agree that even if this Contract does not specifically reference any provision required by state or federal law, those state and federally required provisions are incorporated into this Contract by this reference as though they were specifically listed herein.

ARTICLE 15- TERM: The Contract commences on the date it is signed by the County Manager and remains in effect through February 28, 2017.

ARTICLE 16 - PAYMENT/BILLING: Contractor shall be paid an amount not to exceed $578.76 for completion of the projects as outlined in the Scope of Services.

All invoices shall be submitted to Gila County Accounts Payable, 1400 E. Ash St., Globe, Arizona and include the following information:

- Purchase Order Number
- Contract Number
- Invoice Number
- Service Location
- Vendor Name and Address
- Description of Service

Any alterations to the scope of work resulting in a change in cost must have prior written approval by the County. Any unauthorized work may result in non-payment to the vendor.

Gila County employs a "Net 15" payment term for services meaning the payment will be issued fifteen (15) days from the date the County receives the invoice from the Contractor. Purchase orders sent to the Contractor reflect these terms and conditions.

The Contractor shall have a current I.R.S. W-9 form on file with the County unless not required by law. The County shall not remit payment if the Contractor does not have a current W-9.

IN WITNESS WHEREOF, Service Agreement No. 020417 has been duly executed by the parties hereinabove named, on the date and year first above written.

GILA COUNTY

For John Nelson., County Manager

Date: 2-10-17

AAA LOCK SERVICE

Signature

Cathy Volner

Print Name

AAA LOCK SERVICE

660 WEST ASH STREET

GLOBE, AZ. 85501

928-425-5350

QUOTE FOR GILA CO. SHERIFF OFFICE

24 CAM LOCKS FOR GUN LOCKERS $ 7.49 EACH	TOTAL $ 179.76
PICKING OR DRILLING OUT OLD GUN LOCKERS	LABOR $ 350.00
OPEN PAINTED CABINETS	
ANY QUESTION PLEASE FILL FREE TO CALL	
TOTAL	$ 529.76
TAX	$ 49.00
TOTAL COST FOR JOB	$578.76

THANK YOU

CATHY VOLNER

Cathy Volner

AAA LOCK SERVICE

Tommie C. Martin, District I
610 E. Highway 260 Payson, AZ. 85547
(928) 474-2029

Timothy Humphrey, District II
1400 E. Ash St. Globe, AZ. 85501
(928) 425-3231 Ext. 8753

Woody Cline, District III
1400 E. Ash St. Globe, AZ. 85501
(928) 425-3231 Ext. 8511

GILA COUNTY
www.gilacountyaz.gov

John Nelson, County Manager
Phone (928) 425-3231 Ext.8761

James Menlove, Finance Director
Phone (928) 425-3231 Ext. 8743

1400 E. Ash Street
Globe, AZ 85501

SERVICE AGREEMENT NO. 021317

OFFICE MACHINE REPAIR

PUBLIC WORKS ADMINISTRATION

THIS AGREEMENT, made and entered into this 23rd day of February, **2017,** by and between Gila County, a political subdivision of the State of Arizona hereinafter designated the County, and Steven Enterprise, Inc., of the City of Irvine, State of California, hereinafter designated the Contractor.

WITNESSETH: The Contractor, for and in consideration of the sum to be paid him by the County, in the manner and at the time hereinafter provided, and of the other covenants and agreement's herein contained, hereby agrees, for himself, his heirs, administrators, successors, and assigns as follows:

ARTICLE 1 – SCOPE OF SERVICES: The Contractor shall provide the services and products listed in the Scope of Work below and shall do so in a good, workmanlike and substantial manner and to the satisfaction of the County under the direction of the **Public Works Administration** or designee.

All work performed by the Contractor shall be completed to local codes and regulation per Gila County and the State of Arizona and consistent with all Gila County guidelines.

Scope of Work: Refer to attached Attachment "A" to **Service Agreement 021317** by mention made a binding part of this agreement as set forth herein.

Contractor Fee's: Refer to Attachment "A" to **Service Agreement 021317** by mention made a binding part of this agreement as set forth herein. To the extent that the terms and conditions of this Service Agreement conflict with the Terms and Conditions of Attachment "A" to **Service Agreement 021317**, the terms and conditions of this service agreement will prevail and govern the contractual relationship between the parties.

ARTICLE 2 – TERMINATION: The County reserves the right to terminate the Contract, in whole or in part at any time, when in the best interest of the County, without penalty or recourse. Upon receipt of the written notice, the Contractor shall stop all work as directed in the notice. If the contract is terminated, the County shall be liable only for the services rendered under this contract and accepted material received by the County before the effective date of termination.

ARTICLE 3 - INDEMNIFICATION: Contractor shall indemnify, defend, save and hold harmless the County of Gila and its officers, officials, agents, and employees (hereinafter referred to as "Indemnitee") from and against any and all claims, actions, liabilities, damages, losses, or expenses (including court costs, attorneys' fees, and costs of claim processing, investigation and litigation) (hereinafter referred to as "Claims") for bodily injury or personal injury (including death), or loss or damage to tangible or intangible property caused, or alleged to be caused, in whole or in part, by the negligent or willful acts or omissions of Contractor or any of its owners, officers, directors, agents, employees or subcontractors. This indemnity includes any claim or amount arising out of or recovered under the Workers' Compensation Law or arising out of the failure of such contractor to conform to any federal, state or local law, statute, ordinance, rule, regulation or court decree. It is the specific intention of the parties that the Indemnitee shall, in all instances, except for Claims arising solely from the negligent or willful acts or omissions of the Indemnitee, be indemnified by Contractor from and against any and all claims. It is agreed that Contractor will be responsible for primary loss investigation, defense and judgment costs where this indemnification is applicable. In consideration of the award of this contract, the Contractor agrees to waive all rights of subrogation against the County, its officers, officials, agents and employees for losses arising from the work performed by the Contractor for the County.

ARTICLE 4 - INSURANCE REQUIREMENTS: Contractor and subcontractors shall procure and maintain until all of their obligations have been discharged, including any warranty periods under this Contract are satisfied, insurance against claims for injury to persons or damage to property which may arise from or in connection with the performance of the work hereunder by the Contractor, his agents, representatives, employees or subcontractors.

The insurance requirements herein are minimum requirements for this Contract and in no way limit the indemnity covenants contained in this Contract. The County in no way warrants that the minimum limits contained herein are sufficient to protect the Contractor from liabilities that might arise out of the performance of the work under this contract by the Contractor, his agents, representatives, employees or subcontractors and Contractor is free to purchase additional insurance as may be determined necessary.

A. **MINIMUM SCOPE AND LIMITS OF INSURANCE:** Contractor shall provide coverage with limits of liability not less than those stated below.

1. **Commercial General Liability - Occurrence Form**
   Policy shall include bodily injury, property damage and broad form contractual liability coverage.
   - General Aggregate $2,000,000
   - Products - Completed Operations Aggregate $1,000,000
   - Personal and Advertising Injury $1,000,000
   - Each Occurrence $1,000,000

   a. The policy shall be endorsed to include the following additional insured language: **"The County of Gila shall be named as an additional insured with respect to liability arising out of the activities performed by, or on behalf of the Contractor".**

2. **Worker's Compensation and Employers' Liability**

Workers' Compensation	Statutory
Employers' Liability	
Each Accident	$100,000
Disease - Each Employee	$100,000
Disease - Policy Limit	$500,000

   a. Policy shall contain a **waiver of subrogation** against the County of Gila.

3. **Automobile Liability**
Bodily injury and property damage for any owned, hired, and non-owned vehicles used in the performance of this Contract.

Combined Single Limit (CSL)	$1,000,000

a. The policy shall be endorsed to include the following additional insured language:
The County of Gila shall be named as additional insured with respect to liability arising out of the activities performed by, or on behalf of the Contractor, including automobiles owned, leased, hired or borrowed by the Contractor".

4. **Professional Liability (Errors and Omissions Liability)**

Each Claim	$1,000,000
Annual Aggregate	$2,000,000

a. In the event that the professional liability insurance required by this Contract is written on a claims-made basis, Contractor warrants that any retroactive date under the policy shall precede the effective date of this Contract; and that either continuous coverage will be maintained or an extended discovery period will be exercised for a period of two (2) years beginning at the time work under this Contract is completed.

B. **ADDITIONAL INSURANCE REQUIREMENTS:** The policies shall include, or be endorsed to include, the following provisions:

1. On insurance policies where the County of Gila is named as an additional insured, the County of Gila shall be an additional insured to the full limits of liability purchased by the Contractor even if those limits of liability are in excess of those required by this Contract.
2 The Contractor's insurance coverage shall be primary insurance and non-contributory with respect to all other available sources.
3. Coverage provided by the Contractor shall not be limited to the liability assumed under the indemnification provisions of this Contract.

C. **NOTICE OF CANCELLATION:** Each insurance policy required by the insurance provisions of this Contract shall provide the required coverage and shall not be suspended, voided, canceled, reduced in coverage or endorsed to lower limits except after thirty (30) days prior written notice has been given to the County. Such notice shall be sent directly to **Gila County Purchasing Department, 1400 E. Ash St., Globe, AZ, 85501** or and shall be sent by certified mail, return receipt requested.

D. **ACCEPTABILITY OF INSURERS:** Insurance is to be placed with insurers duly licensed in the State of Arizona or which hold approved non-admitted status on the Arizona Department of Insurance List of Qualified Unauthorized Insurers and with an "A.M. Best" rating of not less than B+ VI. The County in no way warrants that the above-required minimum insurer rating is sufficient to protect the Contractor from potential insurer insolvency.

E. **VERIFICATION OF COVERAGE:** Contractor shall furnish the County with certificates of insurance (ACORD form or equivalent approved by the County) as required by this Contract. The certificates for each insurance policy are to be signed by a person authorized by that insurer to bind coverage on its behalf.

All certificates and endorsements are to be received and approved by the County before work commences. Each insurance policy required by this Contract must be in effect at or prior to commencement of work under this Contract and remain in effect for the duration of the project. Failure to maintain the insurance policies as required by this Contract or to provide evidence of renewal is a material breach of contract.

All certificates required by this Contract shall be sent directly to **Gila County Purchasing Department, 1400 E. Ash St., Globe, AZ, 85501** or email to bhurst@gilacountyaz.gov. The County project/contract number and project description shall be noted on the certificate of insurance. The County reserves the right to require complete, certified copies of all insurance policies required by this Contract at any time.

F. **SUBCONTRACTORS:** Contractors' certificate(s) shall include all subcontractors as additional insured's under its policies **or** Contractor shall furnish to the County separate certificates and endorsements for each subcontractor. All coverage's for subcontractors shall be subject to the minimum requirements identified above.

G. **APPROVAL:** Any modification or variation from the insurance requirements in this Contract shall be made by the County Attorney, whose decision shall be final. Such action will not require a formal Contract amendment, but may be made by administrative action.

ARTICLE 5 – LEGAL ARIZONA WORKERS ACT COMPLIANCE: Contractor hereby warrants that it will at all times during the term of this Contract comply with all federal immigration laws applicable to Contractor's employment of its employees, and with the requirements of A.R.S. § 23-214 (A) (together the "State and Federal Immigration Laws"). Contractor shall further ensure that each subcontractor who performs any work for Contractor under this contract likewise complies with the State and Federal Immigration Laws. County shall have the right at any time to inspect the books and records of Contractor and any subcontractor in order to verify such party's compliance with the State and Federal Immigration Laws.

Any breach of Contractor's or any subcontractor's warranty of compliance with the State and Federal Immigration Laws, or of any other provision of this section, shall be deemed to be a material breach of this Contract subjecting Contractor to penalties up to and including suspension or termination of this Contract. If the breach is by a subcontractor, and the subcontract is suspended or terminated as a result, Contractor shall be required to take such steps as may be necessary to either self-perform the services that would have been provided under the subcontract or retain a replacement subcontractor as soon as possible so as not to delay project completion.

Contractor shall advise each subcontractor of County's rights, and the subcontractor's obligations, under this Article by including a provision in each subcontract substantially in the following form: "Subcontractor hereby warrants that it will at all times during the term of this contract comply with all federal immigration laws applicable to Subcontractor's employees, and with the requirements of A.R.S. § 23-214 (A). Subcontractor further agrees that County may inspect the Subcontractor's books and records to insure that Subcontractor is in compliance with these requirements. Any breach of this paragraph by Subcontractor will be deemed to be a material breach of this contract subjecting Subcontractor to penalties up to and including suspension or termination of this contract."

Any additional costs attributable directly or indirectly to remedial action under this Article shall be the responsibility of Contractor. In the event that remedial action under this Article results in delay to one or more tasks on the critical path of Contractor's approved construction or critical milestones schedule, such period of delay shall be deemed excusable delay for which Contractor shall be entitled to an extension of time, but not costs.

ARTICLE 6 – ISRAEL BOYCOTT CERTIFICATION: Contractor hereby certifies that it is not currently engaged in and will not, for the duration of this agreement, engage in a boycott of Israel as defined by A.R.S. § 35-393.01. Violation of this certification by Contractor may result in action by County up to and including termination of this agreement.

ARTICLE 7 - WARRANTY: Contractor expressly warrants that all goods or services furnished under this agreement shall conform to all specifications and appropriate standards, will be new, and will be free from defects in material or workmanship. Contractor warrants that all such goods or services will conform to any statements made on the containers or labels or advertisements for such goods, or services, and that any goods will be adequately contained, packaged, marked and labeled. Contractor warrants that all goods or services furnished hereunder will be merchantable, and will be safe and appropriate for the purpose for which goods or services of that kind are normally used. If Contractor knows or has reason to know the particular purpose for which County intends to use the goods or services, Contractor warrants that such goods or services will be fit for such particular purpose. Contractor warrants that goods or services furnished will conform in all respects to samples. Inspection, test, acceptance of use of the goods or services furnished hereunder shall not affect the Contractor's obligation under this warranty, and such warranties shall survive inspection, test, acceptance and use. Contractor's warranty shall run to County, its successors, and assigns. Contractor agrees to replace or correct, at Contractor's sole cost and expense, defects of any goods or services not conforming to the foregoing warranty, or improperly installed, as well as guarantee to the County and to the Owner, against liability, losses or damage to any or all parts of the work arising from said installation during a period of two (2) years from date of completion. All guarantees will inure to the benefit of the County and the Owner, their successors or assigns, including equipment warranties, ordinary wear and tear and unusual abuse or neglect excepted.

In the event of failure of Contractor to correct defects in or replace nonconforming goods or services promptly, County, after reasonable notice to Contractor, may make such corrections or replace such goods and services and charge Contractor for the cost incurred by the County in doing so. Contractor recognizes that County's requirements may require immediate repairs in reworking of defective goods, without notice to the Contractor. In such event, Contractor shall reimburse County for those costs, delays, or other damages which County has incurred.

ARTICLE 8 - LAWS AND ORDINANCES: This agreement shall be enforced under the laws of the State of Arizona. Contractor shall maintain in current status all Federal, State and Local licenses and permits required for the operation of the business conducted by the Contractor. The Contractor shall comply with the applicable provisions of the Americans with Disabilities Act (Public Law 101-336, 42 U.S.C. 12101-12213) and applicable federal regulations under the Act.

ARTICLE 9 - CANCELLATION: This agreement is subject to cancellation pursuant to A.R.S. §38-511. If the Agreement is terminated, the county shall be liable only for payment for services rendered and accepted material received by the County before the effective date of termination.

ARTICLE 10 - RELATIONSHIP OF THE PARTIES: Contractor is an independent contractor of the County. Contractor represents that he has or will secure, at his own expense, all personnel required in performing the services under this contract. Such personnel shall not be employees of or have any contractual relationship with the County. All personnel engaged in work under this contract shall be fully qualified and shall be authorized or permitted under State and local law to perform such services. Contractor warrants that he has obtained or will obtain Worker's Compensation Insurance for his employees working on this contract and that any subcontractors will likewise obtain Worker's Compensation Insurance for of their employees working on this contract. It is further agreed by Contractor that he shall obey all state and federal statutes, rules, and regulations which are applicable to provisions of the services called for herein. Neither Contractor nor any employee of the Contractor shall be deemed an officer, employee, or agent of the County.

ARTICLE 11 - NON-APPROPRIATIONS CLAUSE: Contractor acknowledges that the County is a governmental entity, and the contract validity is based upon the availability of public funding under its authority. In the event that public funds are unavailable and not appropriated for the performance of County's obligations under this contract, then this contract shall automatically expire without penalty to County after written notice to Contractor of the unavailability and non-appropriation of public funds.

It is expressly agreed that the County shall only activate this non-appropriation provision as an emergency fiscal measure. The County shall not activate this non-appropriation provision for its convenience, to circumvent the requirements of this contract, or to enable the County to contract with another Contractor for the same supplies or services covered under this Addendum.

ARTICLE 12- ENTIRE CONTRACT CLAUSE: The Contractor and the County have read this Contract and agree to be bound by all of its terms, and further agree that it constitutes the entire contract between the two parties and may only be modified by a written mutual contract signed by the parties. No oral agreement or oral provision outside this Contract shall have any force or effect.

ARTICLE 13 - NON-WAIVER OF ENFORCEABILITY: Failure of the County to enforce, at any time, any of the provisions of this Contract, or to request at any time performance by Contractor of any of the provisions hereof, shall in no way be construed to be a waiver of such provisions, nor in any way affect the validity of this contract or any part thereof, or the right of the County to enforce each and every provision

ARTICLE 14 - GOVERNING LAW: Both parties agree that this Contract shall be governed by the laws of the state of Arizona. The parties further agree that the jurisdiction for any legal disputes arising out of this Contract shall be the Superior Court of the State of Arizona. The parties agree that even if this Contract does not specifically reference any provision required by state or federal law, those state and federally required provisions are incorporated into this Contract by this reference as though they were specifically listed herein.

ARTICLE 15- TERM: The Contract commences on the date it is signed by the County Manager and remains in effect through February 13, 2018.

ARTICLE 16 - PAYMENT/BILLING: Contractor shall be paid an amount not to exceed $1,500.00 for completion of the projects as outlined in the Scope of Services.

All invoices shall be submitted to Gila County Accounts Payable, 1400 E. Ash St., Globe, Arizona and include the following information:

- Purchase Order Number
- Contract Number
- Invoice Number
- Service Location
- Vendor Name and Address
- Description of Service

Any alterations to the scope of work resulting in a change in cost must have prior written approval by the County. Any unauthorized work may result in non-payment to the vendor.

Gila County employs a "Net 15" payment term for services meaning the payment will be issued fifteen (15) days from the date the County receives the invoice from the Contractor. Purchase orders sent to the Contractor reflect these terms and conditions.

The Contractor shall have a current I.R.S. W-9 form on file with the County unless not required by law. The County shall not remit payment if the Contractor does not have a current W-9.

IN WITNESS WHEREOF, Service Agreement No. 021317 has been duly executed by the parties hereinabove named, on the date and year first above written.

GILA COUNTY

Jacque Sandus

For John Nelson., County Manager

Date: 2-23-2017

STEVEN ENTERPRISE, INC.

Amy Watson

Signature

Amy Watson

Print Name

STEVEN ENTERPRISES, INC
Repographic Equipment - Sales - Service - Supplies
(800) 491-8785 (949) 250-8785 Fax: (949) 225-0419

SERVICE QUOTE

Quote Number: 0356239
Quote Date: 2/8/2017
Page: 1

Sold To:
GILA COUNTY
1400 S. ASH STREET
Attn : Debra Espinoza
Globe, AZ 85501

Ship To:
GILA COUNTY
107 W. FRONTIER ST #A
SUITE A
Payson, AZ 85541

Customer ID	PO Number	Sales Rep Name
0011380	QUOTE	MICHELLE RICHEY
Customer Contact	**Shipping Method**	**Payment Terms**
SHANNON	QUOTE	Net 30 Days

Qty	U/M	Item	Description	Unit Price	Ext. Amount
		HP T2300			
		/SL	Labor - Service	0.00	495.00

FIRST HOUR OF SERVICE
$155 EVERY HALF HOUR ADDITIONAL TIME
LABOR QUOTED IS PER HOUR AND NOT A GRAND TOTAL
QUOTE IS PREPARED WITHOUT INITIAL INSPECTION
IF APPROVED, SIGN QUOTE AND RETURN VIA FAX OR EMAIL
michelle@plotters.com
DISCLAIMER: Without an initial inspection, there is no way to determine if additional parts and labor may be required to complete the repair of your machine. Any additional parts and labor will be quoted to you prior to installation. Regardless of the outcome of the initial service, the labor quoted is due. THANK YOU

We appreciate your business.
Quote is good for 30 days.
Quote above may not include Shipping Charges or Sales Tax.

Subtotal:	495.00
Sales Tax:	0.00
Freight:	0.00
Total:	495.00

AMENDMENT NO. 1

The following amendments are hereby incorporated into the agreement for the below project

---

SERVICE AGREEMENT NO. 120816

PRESSURE REGULATOR REPLACEMENT AT JUVENILE DETENTION

Effective January 19, 2016, Gila County and DJ's Companies, Inc. entered into a contract whereby DJ's Companies, Inc. agreed to provide Pressure Regulator Replacement at Juvenile Detention.

The contract term expires on January 31, 2017. The Facilities Management would like to extend the term of the contract to February 28, 2017 due to the needed time for completion.

Amendment No. 1 to Service Agreement No. 120816 will serve to extend the term of the contract to February 28, 2017.

All other terms, conditions and provisions of the original Contract, shall remain the same and apply during the December 21, 2016 to February 28, 2017 contract term.

IN WITNESS WHEREOF, two (2) identical copies of this amendment, each which shall include original signatures and for all purposes be deemed an original thereof, have been duly executed by the parties hereinabove named, on this 23rd day of February, 2017.

GILA COUNTY

Gregory Sandus

FOR **John Nelson, County Manager**

DJ'S COMPANIES, INC.

Darlene Sonovich

Signature

Darlene Sonovich

Print Name

Tommie C. Martin, District I
610 E. Highway 260 Payson, AZ. 85547
(928) 474-2029

Timothy Humphrey, District II
1400 E. Ash St. Globe, AZ. 85501
(928) 425-3231 Ext. 8753

Woody Cline, District III
1400 E. Ash St. Globe, AZ. 85501
(928) 425-3231 Ext. 8511

GILA COUNTY
www.gilacountyaz.gov

John Nelson, County Manager
Phone (928) 425-3231 Ext.8761

James Menlove, Finance Director
Phone (928) 425-3231 Ext. 8743

1400 E. Ash Street
Globe, AZ 85501

SERVICE AGREEMENT NO. 021017-1

MOBILE REPEATER INSTALLATIONS-PAYSON

SHERIFF'S OFFICE

THIS AGREEMENT, made and entered into this 23rd day of February, **2017**, by and between Gila County, a political subdivision of the State of Arizona hereinafter designated the County, and C&M Communications, of the City of Payson, State of Arizona, hereinafter designated the Contractor.

WITNESSETH: The Contractor, for and in consideration of the sum to be paid him by the County, in the manner and at the time hereinafter provided, and of the other covenants and agreement's herein contained, hereby agrees, for himself, his heirs, administrators, successors, and assigns as follows:

ARTICLE 1 – SCOPE OF SERVICES: The Contractor shall provide the services and products listed in the Scope of Work below and shall do so in a good, workmanlike and substantial manner and to the satisfaction of the County under the direction of the **Sheriff's Office** or designee.

All work performed by the Contractor shall be completed to local codes and regulation per Gila County and the State of Arizona and consistent with all Gila County guidelines.

Scope of Work: Refer to attached Attachment "A" to **Service Agreement 021017-1** by mention made a binding part of this agreement as set forth herein.

Contractor Fee's: Refer to Attachment "A" to **Service Agreement 021017-1** by mention made a binding part of this agreement as set forth herein. To the extent that the terms and conditions of this Service Agreement conflict with the Terms and Conditions of Attachment "A" to **Service Agreement 021017-1**, the terms and conditions of this service agreement will prevail and govern the contractual relationship between the parties.

ARTICLE 2 – TERMINATION: The County reserves the right to terminate the Contract, in whole or in part at any time, when in the best interest of the County, without penalty or recourse. Upon receipt of the written notice, the Contractor shall stop all work as directed in the notice. If the contract is terminated, the County shall be liable only for the services rendered under this contract and accepted material received by the County before the effective date of termination.

ARTICLE 3 - INDEMNIFICATION: Contractor shall indemnify, defend, save and hold harmless the County of Gila and its officers, officials, agents, and employees (hereinafter referred to as "Indemnitee") from and against any and all claims, actions, liabilities, damages, losses, or expenses (including court costs, attorneys' fees, and costs of claim processing, investigation and litigation) (hereinafter referred to as "Claims") for bodily injury or personal injury (including death), or loss or damage to tangible or intangible property caused, or alleged to be caused, in whole or in part, by the negligent or willful acts or omissions of Contractor or any of its owners, officers, directors, agents, employees or subcontractors. This indemnity includes any claim or amount arising out of or recovered under the Workers' Compensation Law or arising out of the failure of such contractor to conform to any federal, state or local law, statute, ordinance, rule, regulation or court decree. It is the specific intention of the parties that the Indemnitee shall, in all instances, except for Claims arising solely from the negligent or willful acts or omissions of the Indemnitee, be indemnified by Contractor from and against any and all claims. It is agreed that Contractor will be responsible for primary loss investigation, defense and judgment costs where this indemnification is applicable. In consideration of the award of this contract, the Contractor agrees to waive all rights of subrogation against the County, its officers, officials, agents and employees for losses arising from the work performed by the Contractor for the County.

ARTICLE 4 – INSURANCE REQUIREMENTS: Contractor and subcontractors shall procure and maintain until all of their obligations have been discharged, including any warranty periods under this Contract are satisfied, insurance against claims for injury to persons or damage to property which may arise from or in connection with the performance of the work hereunder by the Contractor, his agents, representatives, employees or subcontractors.

The insurance requirements herein are minimum requirements for this Contract and in no way limit the indemnity covenants contained in this Contract. The County in no way warrants that the minimum limits contained herein are sufficient to protect the Contractor from liabilities that might arise out of the performance of the work under this contract by the Contractor, his agents, representatives, employees or subcontractors and Contractor is free to purchase additional insurance as may be determined necessary.

A. **MINIMUM SCOPE AND LIMITS OF INSURANCE:** Contractor shall provide coverage with limits of liability not less than those stated below.

1. **Commercial General Liability – Occurrence Form**
   Policy shall include bodily injury, property damage and broad form contractual liability coverage.
   - General Aggregate $2,000,000
   - Products – Completed Operations Aggregate $1,000,000
   - Personal and Advertising Injury $1,000,000
   - Each Occurrence $1,000,000

   a. The policy shall be endorsed to include the following additional insured language: **"The County of Gila shall be named as an additional insured with respect to liability arising out of the activities performed by, or on behalf of the Contractor".**

2. **Worker's Compensation and Employers' Liability**

Workers' Compensation	Statutory
Employers' Liability	
Each Accident	$100,000
Disease – Each Employee	$100,000
Disease – Policy Limit	$500,000

   a. Policy shall contain a **waiver of subrogation** against the County of Gila.

3. **Automobile Liability**

Bodily injury and property damage for any owned, hired, and non-owned vehicles used in the performance of this Contract.

Combined Single Limit (CSL)	$1,000,000

a. The policy shall be endorsed to include the following additional insured language:
The County of Gila shall be named as additional insured with respect to liability arising out of the activities performed by, or on behalf of the Contractor, including automobiles owned, leased, hired or borrowed by the Contractor".

4. **Professional Liability (Errors and Omissions Liability)**

Each Claim	$1,000,000
Annual Aggregate	$2,000,000

a. In the event that the professional liability insurance required by this Contract is written on a claims-made basis, Contractor warrants that any retroactive date under the policy shall precede the effective date of this Contract; and that either continuous coverage will be maintained or an extended discovery period will be exercised for a period of two (2) years beginning at the time work under this Contract is completed.

B. **ADDITIONAL INSURANCE REQUIREMENTS:** The policies shall include, or be endorsed to include, the following provisions:

1. On insurance policies where the County of Gila is named as an additional insured, the County of Gila shall be an additional insured to the full limits of liability purchased by the Contractor even if those limits of liability are in excess of those required by this Contract.
2 The Contractor's insurance coverage shall be primary insurance and non-contributory with respect to all other available sources.
3. Coverage provided by the Contractor shall not be limited to the liability assumed under the indemnification provisions of this Contract.

C. **NOTICE OF CANCELLATION:** Each insurance policy required by the insurance provisions of this Contract shall provide the required coverage and shall not be suspended, voided, canceled, reduced in coverage or endorsed to lower limits except after thirty (30) days prior written notice has been given to the County. Such notice shall be sent directly to **Gila County Purchasing Department, 1400 E. Ash St., Globe, AZ, 85501** or and shall be sent by certified mail, return receipt requested.

D. **ACCEPTABILITY OF INSURERS:** Insurance is to be placed with insurers duly licensed in the State of Arizona or which hold approved non-admitted status on the Arizona Department of Insurance List of Qualified Unauthorized Insurers and with an "A.M. Best" rating of not less than B+ VI. The County in no way warrants that the above-required minimum insurer rating is sufficient to protect the Contractor from potential insurer insolvency.

E. **VERIFICATION OF COVERAGE:** Contractor shall furnish the County with certificates of insurance (ACORD form or equivalent approved by the County) as required by this Contract. The certificates for each insurance policy are to be signed by a person authorized by that insurer to bind coverage on its behalf.

All certificates and endorsements are to be received and approved by the County before work commences. Each insurance policy required by this Contract must be in effect at or prior to commencement of work under this Contract and remain in effect for the duration of the project. Failure to maintain the insurance policies as required by this Contract or to provide evidence of renewal is a material breach of contract.

All certificates required by this Contract shall be sent directly to **Gila County Purchasing Department, 1400 E. Ash St., Globe, AZ, 85501** or email to bhurst@gilacountyaz.gov. The County project/contract number and project description shall be noted on the certificate of insurance. The County reserves the right to require complete, certified copies of all insurance policies required by this Contract at any time.

F. **SUBCONTRACTORS:** Contractors' certificate(s) shall include all subcontractors as additional insured's under its policies **or** Contractor shall furnish to the County separate certificates and endorsements for each subcontractor. All coverage's for subcontractors shall be subject to the minimum requirements identified above.

G. **APPROVAL:** Any modification or variation from the insurance requirements in this Contract shall be made by the County Attorney, whose decision shall be final. Such action will not require a formal Contract amendment, but may be made by administrative action.

ARTICLE 5 – LEGAL ARIZONA WORKERS ACT COMPLIANCE: Contractor hereby warrants that it will at all times during the term of this Contract comply with all federal immigration laws applicable to Contractor's employment of its employees, and with the requirements of A.R.S. § 23-214 (A) (together the "State and Federal Immigration Laws"). Contractor shall further ensure that each subcontractor who performs any work for Contractor under this contract likewise complies with the State and Federal Immigration Laws. County shall have the right at any time to inspect the books and records of Contractor and any subcontractor in order to verify such party's compliance with the State and Federal Immigration Laws.

Any breach of Contractor's or any subcontractor's warranty of compliance with the State and Federal Immigration Laws, or of any other provision of this section, shall be deemed to be a material breach of this Contract subjecting Contractor to penalties up to and including suspension or termination of this Contract. If the breach is by a subcontractor, and the subcontract is suspended or terminated as a result, Contractor shall be required to take such steps as may be necessary to either self-perform the services that would have been provided under the subcontract or retain a replacement subcontractor as soon as possible so as not to delay project completion.

Contractor shall advise each subcontractor of County's rights, and the subcontractor's obligations, under this Article by including a provision in each subcontract substantially in the following form: "Subcontractor hereby warrants that it will at all times during the term of this contract comply with all federal immigration laws applicable to Subcontractor's employees, and with the requirements of A.R.S. § 23-214 (A). Subcontractor further agrees that County may inspect the Subcontractor's books and records to insure that Subcontractor is in compliance with these requirements. Any breach of this paragraph by Subcontractor will be deemed to be a material breach of this contract subjecting Subcontractor to penalties up to and including suspension or termination of this contract."

Any additional costs attributable directly or indirectly to remedial action under this Article shall be the responsibility of Contractor. In the event that remedial action under this Article results in delay to one or more tasks on the critical path of Contractor's approved construction or critical milestones schedule, such period of delay shall be deemed excusable delay for which Contractor shall be entitled to an extension of time, but not costs.

ARTICLE 6 – ISRAEL BOYCOTT CERTIFICATION: Contractor hereby certifies that it is not currently engaged in and will not, for the duration of this agreement, engage in a boycott of Israel as defined by A.R.S. § 35-393.01. Violation of this certification by Contractor may result in action by County up to and including termination of this agreement.

ARTICLE 7 – WARRANTY: Contractor expressly warrants that all goods or services furnished under this agreement shall conform to all specifications and appropriate standards, will be new, and will be free from defects in material or workmanship. Contractor warrants that all such goods or services will conform to any statements made on the containers or labels or advertisements for such goods, or services, and that any goods will be adequately contained, packaged, marked and labeled. Contractor warrants that all goods or services furnished hereunder will be merchantable, and will be safe and appropriate for the purpose for which goods or services of that kind are normally used. If Contractor knows or has reason to know the particular purpose for which County intends to use the goods or services, Contractor warrants that such goods or services will be fit for such particular purpose. Contractor warrants that goods or services furnished will conform in all respects to samples. Inspection, test, acceptance of use of the goods or services furnished hereunder shall not affect the Contractor's obligation under this warranty, and such warranties shall survive inspection, test, acceptance and use. Contractor's warranty shall run to County, its successors, and assigns. Contractor agrees to replace or correct, at Contractor's sole cost and expense, defects of any goods or services not conforming to the foregoing warranty, or improperly installed, as well as guarantee to the County and to the Owner, against liability, losses or damage to any or all parts of the work arising from said installation during a period of two (2) years from date of completion. All guarantees will inure to the benefit of the County and the Owner, their successors or assigns, including equipment warranties, ordinary wear and tear and unusual abuse or neglect excepted.

In the event of failure of Contractor to correct defects in or replace nonconforming goods or services promptly, County, after reasonable notice to Contractor, may make such corrections or replace such goods and services and charge Contractor for the cost incurred by the County in doing so. Contractor recognizes that County's requirements may require immediate repairs in reworking of defective goods, without notice to the Contractor. In such event, Contractor shall reimburse County for those costs, delays, or other damages which County has incurred.

ARTICLE 8 – LAWS AND ORDINANCES: This agreement shall be enforced under the laws of the State of Arizona. Contractor shall maintain in current status all Federal, State and Local licenses and permits required for the operation of the business conducted by the Contractor. The Contractor shall comply with the applicable provisions of the Americans with Disabilities Act (Public Law 101-336, 42 U.S.C. 12101-12213) and applicable federal regulations under the Act.

ARTICLE 9 – CANCELLATION: This agreement is subject to cancellation pursuant to A.R.S. §38-511. If the Agreement is terminated, the county shall be liable only for payment for services rendered and accepted material received by the County before the effective date of termination.

ARTICLE 10 – RELATIONSHIP OF THE PARTIES: Contractor is an independent contractor of the County. Contractor represents that he has or will secure, at his own expense, all personnel required in performing the services under this contract. Such personnel shall not be employees of or have any contractual relationship with the County. All personnel engaged in work under this contract shall be fully qualified and shall be authorized or permitted under State and local law to perform such services. Contractor warrants that he has obtained or will obtain Worker's Compensation Insurance for his employees working on this contract and that any subcontractors will likewise obtain Worker's Compensation Insurance for of their employees working on this contract. It is further agreed by Contractor that he shall obey all state and federal statutes, rules, and regulations which are applicable to provisions of the services called for herein. Neither Contractor nor any employee of the Contractor shall be deemed an officer, employee, or agent of the County.

ARTICLE 11 – NON-APPROPRIATIONS CLAUSE: Contractor acknowledges that the County is a governmental entity, and the contract validity is based upon the availability of public funding under its authority. In the event that public funds are unavailable and not appropriated for the performance of County's obligations under this contract, then this contract shall automatically expire without penalty to County after written notice to Contractor of the unavailability and non-appropriation of public funds.

It is expressly agreed that the County shall only activate this non-appropriation provision as an emergency fiscal measure. The County shall not activate this non-appropriation provision for its convenience, to circumvent the requirements of this contract, or to enable the County to contract with another Contractor for the same supplies or services covered under this Addendum.

ARTICLE 12– ENTIRE CONTRACT CLAUSE: The Contractor and the County have read this Contract and agree to be bound by all of its terms, and further agree that it constitutes the entire contract between the two parties and may only be modified by a written mutual contract signed by the parties. No oral agreement or oral provision outside this Contract shall have any force or effect.

ARTICLE 13 – NON-WAIVER OF ENFORCEABILITY: Failure of the County to enforce, at any time, any of the provisions of this Contract, or to request at any time performance by Contractor of any of the provisions hereof, shall in no way be construed to be a waiver of such provisions, nor in any way affect the validity of this contract or any part thereof, or the right of the County to enforce each and every provision

ARTICLE 14 – GOVERNING LAW: Both parties agree that this Contract shall be governed by the laws of the state of Arizona. The parties further agree that the jurisdiction for any legal disputes arising out of this Contract shall be the Superior Court of the State of Arizona. The parties agree that even if this Contract does not specifically reference any provision required by state or federal law, those state and federally required provisions are incorporated into this Contract by this reference as though they were specifically listed herein.

ARTICLE 15– TERM: The Contract commences on the date it is signed by the County Manager and remains in effect through June 30, 2017.

ARTICLE 16 – PAYMENT/BILLING: Contractor shall be paid an amount not to exceed $17,500.00 for completion of the projects as outlined in the Scope of Services.

All invoices shall be submitted to Gila County Accounts Payable, 1400 E. Ash St., Globe, Arizona and include the following information:

- Purchase Order Number
- Contract Number
- Invoice Number
- Service Location
- Vendor Name and Address
- Description of Service

Any alterations to the scope of work resulting in a change in cost must have prior written approval by the County. Any unauthorized work may result in non-payment to the vendor.

Gila County employs a "Net 15" payment term for services meaning the payment will be issued fifteen (15) days from the date the County receives the invoice from the Contractor. Purchase orders sent to the Contractor reflect these terms and conditions.

The Contractor shall have a current I.R.S. W-9 form on file with the County unless not required by law. The County shall not remit payment if the Contractor does not have a current W-9.

IN WITNESS WHEREOF, Service Agreement No. 021017-1 has been duly executed by the parties hereinabove named, on the date and year first above written.

GILA COUNTY

For Jacque Sanders
John Nelson, County Manager

Date: 2-23-2017

C&M COMMUNICATIONS

Signature

Christopher F. Salsot
Print Name

C&M COMMUNICATIONS LLC

PAYSON, AZ 85547
www.cmcommaz.com

Quote

Date	Quote #
12/9/2016	16-1209716

Name / Address
GILA COUNTY SHERIFFS OFFICE P.O. BOX 311 GLOBE, AZ 85502

Project

Description	Qty	Rate	Total
CUST NEEDS QUOTE FOR MOBILE REPEATER INSTALLATIONS.		0.00	0.00T
	1		0.00
NMO-HDQWB VHF QUARTER WAVE ANTENNA WITH COAX CABLE AND RF CONNECTOR	1		0.00T
SERVICE LABOR: INTERFACING AND MODIFICATION TO CUSTOMER SUPPLIED MOBILE RADIO. SETUP, TUNING, AND INSTALLATION OF REPEATER, FILTERS AND ANTENNA INTO A PATROL VEHICLE	25	700.00	17,500.00
INSTALLATION OF GPS ANTENNA AND DPS RADIO AT THE SAME TIME AS MOBILE REPEATER INSTALLATION IF CUSTOMER PREORDERS MATERIALS		0.00	0.00
.			

Subtotal	$17,500.00
Sales Tax (8.6%)	$0.00
Total	$17,500.00

Quote for requested equipment. To place an order please sign and fax this quote along with a copy of your purchase order to: (928) 472-7003

Signature _____

AMENDMENT NO. 3 to SERVICE AGREEMENT NO. 120514

The following amendments are hereby incorporated into the agreement for the below project

---

SHERIFF'S OFFICE APPLIANCE SERVICE AND REPAIR

SHERIFF'S OFFICE

Effective January 01, 2015, Gila County and Service Plus, Inc. entered into a contract whereby Service Plus, Inc. agreed to provide miscellaneous appliance service and repair to the Gila County Sheriff's Office.

Amendment No. 1 to **Service Agreement No. 120514**, was executed on January 13, 2016 extending the term of the contract from January 01, 2016 to December 31, 2016.

Amendment No. 2 to Service Agreement No. 120514 was executed on June 15, 2016 to increase the contract amount by an amount of Two Thousand, Five Hundred dollars and 00/100's ($2,500.00).

Service Agreement No. 120514 will expire on December 31, 2016**. Per Article 13-Term,** Gila County shall have the sole option, to renew the contract for two (2) additional (1) year periods.

Amendment No. 3 to **Service Agreement No. 120514**, will allow for Gila County to exercise the option to renew the term of the Agreement for one (1) additional one (1) year term, from January 01, 2017 to December 31, 2017, for a contract amount of not to exceed Five Thousand dollars and 00/100's ($5,000.00) without prior written approval from the County.

The contract expires December 31, 2016. The parties hereby agree to exercise the renewal option and agree to extend the contract term for one (1) year from January 1, 2017, to December 31, 2017.

All other terms, conditions and provisions of the original Contract, shall remain the same and apply during the January 01, 2017 to December 31, 2017 renewal period.

IN WITNESS WHEREOF, two (2) identical copies of this amendment, each which shall include original signatures and for all purposes be deemed an original thereof, have been duly executed by the parties hereinabove named, on this 23rd day of February, 2017.

GILA COUNTY:

Jacque Sandus

For **John Nelson, County Manager**

Date: 2-23-2017

SERVICE PLUS, INC.

Signature

DAVE KEENEY

Print Name

AMENDMENT NO. 2 to SERVICE AGREEMENT NO. 110614-1

The following amendments are hereby incorporated into the agreement for the below project

---

ON-CALL GLASS REPAIR

FACILITIES

Effective February 04, 2015 Gila County and Azteca Glass, Inc. entered into a contract whereby Azteca Glass, Inc. agreed to provide On Call Glass Repair to the various Gila County buildings.

AMENDMENT NO. 1 to **Service Agreement No. 110614-1**, was executed on January 20, 2016 to allow for Gila County to exercise the option to renew the term of the Agreement for one (1) one (1) year term, from February 04, 2016 to February 03, 2017, for a contract amount of not to exceed Five Thousand dollars and 00/100's ($5,000.00) without prior written approval from the County.

Service Agreement No. 110614-1 will expire on February 03, 2017. **Per Article 14-Term,** Gila County shall have the right, at its sole option, to renew the contract for two (2) additional (1) year periods.

AMENDMENT NO. 2 to **Service Agreement No. 110614-1**, will allow for Gila County to exercise the option to renew the term of the Agreement for one (1) one (1) year term, from February 04, 2017 to February 03, 2018, for a contract amount of not to exceed Five Thousand dollars and 00/100's ($5,000.00) without prior written approval from the County.

All other terms, conditions and provisions of the original Contract, shall remain the same and apply during the February 04, 2017 to February 03, 2018 renewal period.

IN WITNESS WHEREOF, two (2) identical counterparts of this amendment, each which shall include original signatures and for all purposes be deemed an original thereof, have been duly executed by the parties hereinabove named, on this 23rd day of February, 2017.

GILA COUNTY:

Jacque Sandus

FOR: **John Nelson, County Manager**

Date: 2·23·2017

AZTECA GLASS, INC.

James R Langley

Signature

James R Langley

Print Name

Tommie C. Martin, District I
610 E. Highway 260 Payson, AZ. 85547
(928) 474-2029

Timothy Humphrey, District II
1400 E. Ash St. Globe, AZ. 85501
(928) 425-3231 Ext. 8753

Woody Cline, District III
1400 E. Ash St. Globe, AZ. 85501
(928) 425-3231 Ext. 8511

GILA COUNTY
www.gilacountyaz.gov

John Nelson, County Manager
Phone (928) 425-3231 Ext.8761

James Menlove, Finance Director
Phone (928) 425-3231 Ext. 8743

1400 E. Ash Street
Globe, AZ 85501

SERVICE AGREEMENT NO. 022117

COPPER DUST STAMPEDE RODEO 2017

PUBLIC WORKS

THIS AGREEMENT, made and entered into this 23rd day of February, **2017**, by and between Gila County, a political subdivision of the State of Arizona hereinafter designated the County, and The Gila County Rodeo Committee, of the City of Globe, State of Arizona, hereinafter designated the Contractor.

WITNESSETH: The Contractor, for and in consideration of the sum to be paid him by the County, in the manner and at the time hereinafter provided, and of the other covenants and agreement's herein contained, hereby agrees, for himself, his heirs, administrators, successors, and assigns as follows:

ARTICLE 1 – SCOPE OF SERVICES: The Contractor shall provide the services and products listed in the Scope of Work below and shall do so in a good, workmanlike and substantial manner and to the satisfaction of the County under the direction of the **Public Works** or designee.

All work performed by the Contractor shall be completed to local codes and regulation per Gila County and the State of Arizona and consistent with all Gila County guidelines.

Scope of Work: Refer to attached Attachment "A" to **Service Agreement 022117** by mention made a binding part of this agreement as set forth herein.

Contractor Fee's: Refer to Attachment "A" to **Service Agreement 022117** by mention made a binding part of this agreement as set forth herein. To the extent that the terms and conditions of this Service Agreement **conflict with the Terms and Conditions of Attachment "A"** to **Service Agreement 022117**, the terms and conditions of this service agreement will prevail and govern the contractual relationship between the parties.

ARTICLE 2 – TERMINATION: The County reserves the right to terminate the Contract, in whole or in part at any time, when in the best interest of the County, without penalty or recourse. Upon receipt of the written notice, the Contractor shall stop all work as directed in the notice. If the contract is terminated, the County shall be liable only for the services rendered under this contract and accepted material received by the County before the effective date of termination.

ARTICLE 3 - INDEMNIFICATION: Contractor shall indemnify, defend, save and hold harmless the County of Gila and its officers, officials, agents, and employees (hereinafter referred to as "Indemnitee") from and against any and all claims, actions, liabilities, damages, losses, or expenses (including court costs, attorneys' fees, and costs of claim processing, investigation and litigation) (hereinafter referred to as "Claims") for bodily injury or personal injury (including death), or loss or damage to tangible or intangible property caused, or alleged to be caused, in whole or in part, by the negligent or willful acts or omissions of Contractor or any of its owners, officers, directors, agents, employees or subcontractors. This indemnity includes any claim or amount arising out of or recovered under the Workers' Compensation Law or arising out of the failure of such contractor to conform to any federal, state or local law, statute, ordinance, rule, regulation or court decree. It is the specific intention of the parties that the Indemnitee shall, in all instances, except for Claims arising solely from the negligent or willful acts or omissions of the Indemnitee, be indemnified by Contractor from and against any and all claims. It is agreed that Contractor will be responsible for primary loss investigation, defense and judgment costs where this indemnification is applicable. In consideration of the award of this contract, the Contractor agrees to waive all rights of subrogation against the County, its officers, officials, agents and employees for losses arising from the work performed by the Contractor for the County.

ARTICLE 4 – INSURANCE REQUIREMENTS: Contractor and subcontractors shall procure and maintain until all of their obligations have been discharged, including any warranty periods under this Contract are satisfied, insurance against claims for injury to persons or damage to property which may arise from or in connection with the performance of the work hereunder by the Contractor, his agents, representatives, employees or subcontractors.

The insurance requirements herein are minimum requirements for this Contract and in no way limit the indemnity covenants contained in this Contract. The County in no way warrants that the minimum limits contained herein are sufficient to protect the Contractor from liabilities that might arise out of the performance of the work under this contract by the Contractor, his agents, representatives, employees or subcontractors and Contractor is free to purchase additional insurance as may be determined necessary.

A. **MINIMUM SCOPE AND LIMITS OF INSURANCE:** Contractor shall provide coverage with limits of liability not less than those stated below.

1. **Commercial General Liability – Occurrence Form**
   Policy shall include bodily injury, property damage and broad form contractual liability coverage.
   - General Aggregate $2,000,000
   - Products – Completed Operations Aggregate $1,000,000
   - Personal and Advertising Injury $1,000,000
   - Each Occurrence $1,000,000

   a. The policy shall be endorsed to include the following additional insured language: **"The County of Gila shall be named as an additional insured with respect to liability arising out of the activities performed by, or on behalf of the Contractor".**

2. **Worker's Compensation and Employers' Liability**

Workers' Compensation	Statutory
Employers' Liability	
Each Accident	$100,000
Disease – Each Employee	$100,000
Disease – Policy Limit	$500,000

   a. Policy shall contain a **waiver of subrogation** against the County of Gila.

3. **Automobile Liability**
Bodily injury and property damage for any owned, hired, and non-owned vehicles used in the performance of this Contract.

Combined Single Limit (CSL)	$1,000,000

a. The policy shall be endorsed to include the following additional insured language:
The County of Gila shall be named as additional insured with respect to liability arising out of the activities performed by, or on behalf of the Contractor, including automobiles owned, leased, hired or borrowed by the Contractor".

4. **Professional Liability (Errors and Omissions Liability)**

Each Claim	$1,000,000
Annual Aggregate	$2,000,000

a. In the event that the professional liability insurance required by this Contract is written on a claims-made basis, Contractor warrants that any retroactive date under the policy shall precede the effective date of this Contract; and that either continuous coverage will be maintained or an extended discovery period will be exercised for a period of two (2) years beginning at the time work under this Contract is completed.

B. **ADDITIONAL INSURANCE REQUIREMENTS:** The policies shall include, or be endorsed to include, the following provisions:

1. On insurance policies where the County of Gila is named as an additional insured, the County of Gila shall be an additional insured to the full limits of liability purchased by the Contractor even if those limits of liability are in excess of those required by this Contract.
2 The Contractor's insurance coverage shall be primary insurance and non-contributory with respect to all other available sources.
3. Coverage provided by the Contractor shall not be limited to the liability assumed under the indemnification provisions of this Contract.

C. **NOTICE OF CANCELLATION:** Each insurance policy required by the insurance provisions of this Contract shall provide the required coverage and shall not be suspended, voided, canceled, reduced in coverage or endorsed to lower limits except after thirty (30) days prior written notice has been given to the County. Such notice shall be sent directly to **Gila County Purchasing Department, 1400 E. Ash St., Globe, AZ, 85501** or and shall be sent by certified mail, return receipt requested.

D. **ACCEPTABILITY OF INSURERS:** Insurance is to be placed with insurers duly licensed in the State of Arizona or which hold approved non-admitted status on the Arizona Department of Insurance List of **Qualified Unauthorized Insurers and with an "A.M. Best" rating of not less than B+ VI.** The County in no way warrants that the above-required minimum insurer rating is sufficient to protect the Contractor from potential insurer insolvency.

E. **VERIFICATION OF COVERAGE:** Contractor shall furnish the County with certificates of insurance (ACORD form or equivalent approved by the County) as required by this Contract. The certificates for each insurance policy are to be signed by a person authorized by that insurer to bind coverage on its behalf.

All certificates and endorsements are to be received and approved by the County before work commences. Each insurance policy required by this Contract must be in effect at or prior to commencement of work under this Contract and remain in effect for the duration of the project. Failure to maintain the insurance policies as required by this Contract or to provide evidence of renewal is a material breach of contract.

All certificates required by this Contract shall be sent directly to **Gila County Purchasing Department, 1400 E. Ash St., Globe, AZ, 85501** or email to bhurst@gilacountyaz.gov. The County project/contract number and project description shall be noted on the certificate of insurance. The County reserves the right to require complete, certified copies of all insurance policies required by this Contract at any time.

F. **SUBCONTRACTORS:** Contractors' certificate(s) shall include all subcontractors as additional insured's under its policies **or** Contractor shall furnish to the County separate certificates and endorsements for each subcontractor. All coverage's for subcontractors shall be subject to the minimum requirements identified above.

G. **APPROVAL:** Any modification or variation from the insurance requirements in this Contract shall be made by the County Attorney, whose decision shall be final. Such action will not require a formal Contract amendment, but may be made by administrative action.

ARTICLE 5 – LEGAL ARIZONA WORKERS ACT COMPLIANCE: Contractor hereby warrants that it will at all times during the term of this Contract comply with all federal immigration laws applicable to Contractor's employment of its employees, and with the requirements of A.R.S. § 23-214 (A) (together the "State and Federal Immigration Laws"). Contractor shall further ensure that each subcontractor who performs any work for Contractor under this contract likewise complies with the State and Federal Immigration Laws. County shall have the right at any time to inspect the books and records of Contractor and any subcontractor in order to verify such party's compliance with the State and Federal Immigration Laws.

Any breach of Contractor's or any subcontractor's warranty of compliance with the State and Federal Immigration Laws, or of any other provision of this section, shall be deemed to be a material breach of this Contract subjecting Contractor to penalties up to and including suspension or termination of this Contract. If the breach is by a subcontractor, and the subcontract is suspended or terminated as a result, Contractor shall be required to take such steps as may be necessary to either self-perform the services that would have been provided under the subcontract or retain a replacement subcontractor as soon as possible so as not to delay project completion.

Contractor shall advise each subcontractor of County's rights, and the subcontractor's obligations, under this Article by including a provision in each subcontract substantially in the following form: "Subcontractor hereby warrants that it will at all times during the term of this contract comply with all federal immigration laws applicable to Subcontractor's employees, and with the requirements of A.R.S. § 23-214 (A). Subcontractor further agrees that County may inspect the Subcontractor's books and records to insure that Subcontractor is in compliance with these requirements. Any breach of this paragraph by Subcontractor will be deemed to be a material breach of this contract subjecting Subcontractor to penalties up to and including suspension or termination of this contract."

Any additional costs attributable directly or indirectly to remedial action under this Article shall be the responsibility of Contractor. In the event that remedial action under this Article results in delay to one or more tasks on the critical path of Contractor's approved construction or critical milestones schedule, such period of delay shall be deemed excusable delay for which Contractor shall be entitled to an extension of time, but not costs.

ARTICLE 6 – ISRAEL BOYCOTT CERTIFICATION: Contractor hereby certifies that it is not currently engaged in and will not, for the duration of this agreement, engage in a boycott of Israel as defined by A.R.S. § 35-393.01. Violation of this certification by Contractor may result in action by County up to and including termination of this agreement.

ARTICLE 7 – WARRANTY: Contractor expressly warrants that all goods or services furnished under this agreement shall conform to all specifications and appropriate standards, will be new, and will be free from defects in material or workmanship. Contractor warrants that all such goods or services will conform to any statements made on the containers or labels or advertisements for such goods, or services, and that any goods will be adequately contained, packaged, marked and labeled. Contractor warrants that all goods or services furnished hereunder will be merchantable, and will be safe and appropriate for the purpose for which goods or services of that kind are normally used. If Contractor knows or has reason to know the particular purpose for which County intends to use the goods or services, Contractor warrants that such goods or services will be fit for such particular purpose. Contractor warrants that goods or services furnished will conform in all respects to samples. Inspection, test, acceptance of use of the goods or services furnished hereunder shall not affect the Contractor's obligation under this warranty, and such warranties shall survive inspection, test, acceptance and use. Contractor's warranty shall run to County, its successors, and assigns. Contractor agrees to replace or correct, at Contractor's sole cost and expense, defects of any goods or services not conforming to the foregoing warranty, or improperly installed, as well as guarantee to the County and to the Owner, against liability, losses or damage to any or all parts of the work arising from said installation during a period of two (2) years from date of completion. All guarantees will inure to the benefit of the County and the Owner, their successors or assigns, including equipment warranties, ordinary wear and tear and unusual abuse or neglect excepted.

In the event of failure of Contractor to correct defects in or replace nonconforming goods or services promptly, County, after reasonable notice to Contractor, may make such corrections or replace such goods and services and charge Contractor for the cost incurred by the County in doing so. Contractor recognizes that County's requirements may require immediate repairs in reworking of defective goods, without notice to the Contractor. In such event, Contractor shall reimburse County for those costs, delays, or other damages which County has incurred.

ARTICLE 8 – LAWS AND ORDINANCES: This agreement shall be enforced under the laws of the State of Arizona. Contractor shall maintain in current status all Federal, State and Local licenses and permits required for the operation of the business conducted by the Contractor. The Contractor shall comply with the applicable provisions of the Americans with Disabilities Act (Public Law 101-336, 42 U.S.C. 12101-12213) and applicable federal regulations under the Act.

ARTICLE 9 – CANCELLATION: This agreement is subject to cancellation pursuant to A.R.S. §38-511. If the Agreement is terminated, the county shall be liable only for payment for services rendered and accepted material received by the County before the effective date of termination.

ARTICLE 10 – RELATIONSHIP OF THE PARTIES: Contractor is an independent contractor of the County. Contractor represents that he has or will secure, at his own expense, all personnel required in performing the services under this contract. Such personnel shall not be employees of or have any contractual relationship with the County. All personnel engaged in work under this contract shall be fully qualified and shall be authorized or permitted under State and local law to perform such services. Contractor warrants that he has obtained or will obtain Worker's Compensation Insurance for his employees working on this contract and that any subcontractors will likewise obtain Worker's Compensation Insurance for of their employees working on this contract. It is further agreed by Contractor that he shall obey all state and federal statutes, rules, and regulations which are applicable to provisions of the services called for herein. Neither Contractor nor any employee of the Contractor shall be deemed an officer, employee, or agent of the County.

ARTICLE 11 – NON-APPROPRIATIONS CLAUSE: Contractor acknowledges that the County is a governmental entity, and the contract validity is based upon the availability of public funding under its authority. In the event that public funds are unavailable and not appropriated for the performance of County's obligations under this contract, then this contract shall automatically expire without penalty to County after written notice to Contractor of the unavailability and non-appropriation of public funds.

It is expressly agreed that the County shall only activate this non-appropriation provision as an emergency fiscal measure. The County shall not activate this non-appropriation provision for its convenience, to circumvent the requirements of this contract, or to enable the County to contract with another Contractor for the same supplies or services covered under this Addendum.

ARTICLE 12– ENTIRE CONTRACT CLAUSE: The Contractor and the County have read this Contract and agree to be bound by all of its terms, and further agree that it constitutes the entire contract between the two parties and may only be modified by a written mutual contract signed by the parties. No oral agreement or oral provision outside this Contract shall have any force or effect.

ARTICLE 13 – NON-WAIVER OF ENFORCEABILITY: Failure of the County to enforce, at any time, any of the provisions of this Contract, or to request at any time performance by Contractor of any of the provisions hereof, shall in no way be construed to be a waiver of such provisions, nor in any way affect the validity of this contract or any part thereof, or the right of the County to enforce each and every provision

ARTICLE 14 – GOVERNING LAW: Both parties agree that this Contract shall be governed by the laws of the state of Arizona. The parties further agree that the jurisdiction for any legal disputes arising out of this Contract shall be the Superior Court of the State of Arizona. The parties agree that even if this Contract does not specifically reference any provision required by state or federal law, those state and federally required provisions are incorporated into this Contract by this reference as though they were specifically listed herein.

ARTICLE 15– TERM: The Contract commences on the date it is signed by the County Manager and remains in effect through March 30, 2017.

ARTICLE 16 – PAYMENT/BILLING: Contractor shall be paid an amount not to exceed $10,000.00 for completion of the projects as outlined in the Scope of Services.

All invoices shall be submitted to Gila County Accounts Payable, 1400 E. Ash St., Globe, Arizona and include the following information:

- Purchase Order Number
- Contract Number
- Invoice Number
- Service Location
- Vendor Name and Address
- Description of Service

Any alterations to the scope of work resulting in a change in cost must have prior written approval by the County. Any unauthorized work may result in non-payment to the vendor.

Gila County employs a "Net 15" payment term for services meaning the payment will be issued fifteen (15) days from the date the County receives the invoice from the Contractor. Purchase orders sent to the Contractor reflect these terms and conditions.

The Contractor shall have a current I.R.S. W-9 form on file with the County unless not required by law. The County shall not remit payment if the Contractor does not have a current W-9.

IN WITNESS WHEREOF, Service Agreement No. 022117 has been duly executed by the parties hereinabove named, on the date and year first above written.

GILA COUNTY

Jacque Sandus

FOR John Nelson, County Manager

Date: 2-23-2017

THE GILA COUNTY RODEO COMMITTEE

Charles O Brewer

Signature

Charles O. Brewer

Print Name

\ M
SLASH M RODEO COMPANY, INC.
P.O. BOX 484
SONOITA, AZ 85637
(520)455-5558

This is a contract for a Grand Canyon Pro Rodeo Association sanctioned Rodeo with Copper Dust Stampede Rodeo Committee held at the Gila County Fairgrounds in Globe, Arizona on March 11 and 12, 2017. We appreciate the opportunity to be involved in this rodeo event and look forward to working with the committee.

Slash M Rodeo Co. Inc. will provide the following:

All livestock required, Timers, Rodeo officials, chute labor, Bullfighter, and 2 pickup men, and stock contractor liability insurancerlie.
The fee for the above services is $9,668.00 plus stock fee paid by GCPRA

The Gila County Rodeo Committee will provide the following:

Ambulance and EMT services for all performances and slack performances, Arena preparation and maintenance, water and troughs for all rodeo livestock, put barrels out for barrel race and committee in western dress code, the use of 4 ton alfalfa hay and 20 bags of grain (any leftover feed will remain with the committee), and added money award per rodeo event.

Slash M Rodeo Co., Inc.

L. Scott McDaniel, President — Date: 2/9/17

Charles O Brewer
Gila County Rodeo Committee — Date: 2-10-17

Charles O. Brewer President
Print Name and Title

Send 1 Copy Back

CenterforDisease
DETECTION

AGREEMENT FOR LABORATORY SERVICES

February 14, 2017

Agreement for Laboratory services between **Gila County Health Department**, located at 1515 S. Apache Ave, Suite 100, Globe, AZ 85501 and **Center for Disease Detection** (CDD) located at 11603 Crosswinds Way, Suite 100, San Antonio, TX 78233.

This agreement is effective from February 1, 2017 until January 31, 2018. The agreement may be renewed by mutual agreement of both parties for two (2) additional one (1) year terms.

CDD will provide the following:

SUPPLIES AND SERVICES

All collection devices, shipping boxes, postage paid shipping envelopes, and testing are included in the per test price. All supplies will be tracked by our computer and automatically shipped to keep your inventory well stocked.

RESULTS

Your results summary report and hard copies will be reported out to you **by 12:00 pm central time *the same business day your specimens are received in our laboratory***. Repeat testing, confirmations and additional testing not performed by CDD may take an additional day or so. Cultures, Cytopathology and Histopathology test results will be reported to your clinics in 3-5 business days.

When results become available, an e-mail message will be sent notifying you that you have results available. This e-mail message will direct you to a secured access web site where you can download, view and print your results. These will be the ***official*** results. As a courtesy we can also send electronic results in an HL7 format to be uploaded into an electronic medical record system. For compliance with CLIA, CAP and other accrediting organizations we will continue to send both sets of results until you provide us with validation screen shots that the hard copy results correlate with the HL7 results and instruct us to discontinue the hard copy results.

AFTIS

AFTIS software and label printers will be ***provided to all locations at no extra charge!*** AFTIS is our automated paperless software system that allows you to pre-register your patients, select tests to be performed, print barcode labels, retrieve results and print same day hard copies. The use of the AFTIS system will be mandatory for all sites.

TRAINING

CDD will fully train representatives of Gila County Health Department on procedures related to the submission of laboratory specimens to the lab. This will include collection of specimens, use of AFTIS, and specimen packaging for UPS shipping. CDD will provide this same training for any new staff of the Gila County Health Department.

BILLING

We bill monthly for tests performed in our laboratory. Payment is due upon receipt of invoice. CDD will bill for all public and private 3rd party insurers for tests we perform. CDD reserves the right to stop accepting claims for one or more insurance providers. CDD will re-invoice Gila County Health Department for any rejected 3rd party claim **only** if the patient was not covered at the time of service or if Gila County Health Department does not provide appropriate ICD-9 codes. These charges will be at the contract price agreed upon in this agreement.

In the event that CDD is denied reimbursement from a patient's insurance provider we reserve the right to request payment from the patient for lab tests performed. The rate charged to patients will be at a rate different than what is listed in this agreement.

Your initials confirm that you understand and accept all of the above.

Initial_____.

MONTHLY REPORTS

CDD will provide monthly reports that specify the number of tests and number of positives defined by Male/Female to help you with documentation needed for grant writing and budget writing. Each site will be given the option to receive this report. Statistical reports are also available for the Clinical Services Director.

TRANSPORTATION

Specimens will be transported by a next day service courier. During the shipping process specimens could be lost or damaged. Although this is a very rare occurrence, CDD will not be held liable. Pre-printed labels and/or pre-printed postage paid mailers will be provided by CDD for shipment of specimens.

Your initials confirm that you understand and accept all of the above.

Initial_____.

CYTOLOGY/HISTOLOGY

All abnormal Pap test results will be reviewed by a pathologist. These pathology reviewed abnormals will be assessed a pathology review fee (see below). Pap Tests will be reported using widely accepted Bethesda 2001 terminology. A unique consistent Patient Identification number is mandatory for all cytology/histology requests. This patient identifier is used to correlate current requests with past results.

Immunohistochemical (IHC) staining is now offered by CDD. These special stains are used today in the diagnosis of certain difficult to differentiate abnormal cells. This staining process is not required or even common practice, but again, is helpful for certain difficult to call cases. IHC staining is not ordered by the clinician, it can only be ordered by the pathologist reviewing the case if they find it may be useful for added clarity. Since IHC staining does not fit into the budgets of all clients and is not a medical necessity, we are instituting a simple system that allows you to opt out of additional IHC staining if your patient does not approve of directly paying the additional cost. Below please find two options to choose from. Let us know which method you prefer, automatic IHC staining and billing to the site, or IHC staining only with prior written permission.

_____ NO, we do not want IHC staining to be performed automatically if called for by the reviewing pathologist and billed to our facility. Rather we want to be notified in writing prior to IHC staining use. If we do not respond within 24 hours of receipt of the request, CDD may assume that the patient did not authorize the extra process and cost.

_____ YES, we want IHC staining to be performed automatically if called for by the reviewing pathologist and billed to our facility.

Your initials confirm that you understand and accept all of the above.

Initial_____.

PRICING

Pricing is for the device, testing of the device, and transportation. All pricing is confidential and is based on the volume you have provided us. Should test volumes differ significantly from what is listed, CDD reserves the right to re-visit pricing. ***Below pricing is subject to review if not accepted by 5:00 pm central time on February 28, 2016.***

Gila County Division of Health

Test	Est. Volume (Per Year)	Price Per	CPT 1
Urine CT	163	$ 11.00	87491
Urine GC	163	$ 2.50	87591
Syphilis	As Needed	$ 7.50	86592
Thin Prep	36	$ 18.20	88142
HPV by Thin Prep Liquid	As Needed	$ 43.66	87621
Pathology Review	As Needed	$ 7.35	88141

CANCELLATION PURSUANT TO A.R.S.§38-511

All parties hereto acknowledge that this agreement is subject to cancellation by the County pursuant to the provisions of Section 38-511, Arizona Revised Statutes.

LIABILITY INSURANCE

Center for Disease Detection, LLC shall obtain and maintain in full force and effect during the term of this Agreement, at its sole cost and expense, comprehensive professional liability insurance coverage with an insurance carrier reasonably acceptable to Gila County Health Department. Such insurance coverage shall be in such amounts and subject to such deductibles as are consistent with industry practices. On request, Center for Disease Detection, LLC shall produce proof of such insurance coverage to Gila County Health Department.

INDEMNIFICATION

Center for Disease Detection, LLC shall indemnify and hold harmless Gila County Health Department its officers, directors, agents and employees against any and all actions, claims, or demands and against any and all costs and expenses, including but not limited to reasonable attorney's fees, arising out of an injury to a person or property as the result of the negligent act or omission of Center for Disease Detection, LLC its physicians, officers, directors, agents, or employees.

Gila County Health Department shall indemnify and hold harmless Center for Disease Detection, LLC its officers, directors, agents and employees against any and all actions, claims, or demands and against any and all costs and expenses, including but not limited to reasonable attorney's fees, arising out of an injury to a person or property as the result of the negligent act or omission of Gila County Health Department, its physicians, officers, directors, agents, or employees.

LEGAL ARIZONA WORKERS ACT COMPLIANCE

To the extent applicable under A.R.S. § 41-4401, the Contractor and its subcontractors warrant compliance with the federal immigration laws and regulations that relate to their employees and compliance with the E-verify requirements under A.R.S. § 23-214(A).

The Contractor or subcontractors' breach of the above-mentioned warranty shall be deemed a material breach of the Agreement by Gila County. Gila County retains the legal right to randomly inspect the papers and records of the Contractor and its subcontractors who work on the Agreement to ensure that the Contractor and its subcontractors are complying with the above-mentioned warranty.

The Contractor and its subcontractors warrant to keep the papers and records open for inspection during normal business hours by Gila County and to cooperate with Gila County's inspections.

CERTIFICATION OF NO SCRUTINIZED BUSINESS OPERATIONS

Pursuant to A.R.S. §35-397, Contractor hereby certifies that it does not have scrutinized business operations, as defined in A.R.S. § 35-391(15), in Sudan, and that it does not have scrutinized business operations, as defined in A.R.S. § 35-393(12), in Iran.

ATTACHMENT A

Gila County Contractor Standard Terms and Conditions Addendum

A. Addendum Applicability: Contractor and Gila County agree that the terms and conditions of this Addendum shall apply to and govern the contractual relationship between Contractor and Gila County and shall supplement any other contract or agreement entered into between the parties. In the event that the terms and conditions in this Addendum conflict with any provision of any other agreement entered into between the Contractor and Gila County (including a superiority provision similar to this provision), the terms and conditions of this Addendum shall control the contractual relationship between the parties and shall supersede any conflicting provisions found in any other contract or agreement. Contractor understands that acceptance of the terms and conditions contained in this Addendum are a condition precedent to entering into a contractual relationship with Gila County.

B. Contract Defined: As used in this Addendum, the term "Contract" shall refer to any written agreement between Gila County and a person, organization, corporation, company or other entity that provides supplies or services to Gila County regardless of the title or other name applied to that written agreement. The term includes by this reference all the terms and conditions of this Addendum.

C. Contractor Defined: As used in this Addendum, the term "Contractor" shall refer to a person, provider, organization, corporation, company or other entity providing supplies or services to Gila County pursuant to a written agreement regardless of the title or other name applied to "Contractor" in that written agreement.

D. Relationship of the Parties: Contractor is an independent contractor of the County. Contractor represents that he has or will secure, at his own expense, all personnel required in performing the services under this contract. Such personnel shall not be employees of or have any contractual relationship with the County. All personnel engaged in work under this contract shall be fully qualified and shall be authorized or permitted under State and local law to perform such services. Contractor warrants that he has obtained or will obtain Worker's Compensation Insurance for his employees working on this contract and that any subcontractors will likewise obtain Worker's Compensation Insurance for of their employees working on this contract. It is further agreed by Contractor that he shall obey all state and federal statutes, rules, and regulations which are applicable to provisions of the services called for herein. Neither Contractor nor any employee of the Contractor shall be deemed an officer, employee, or agent of the County.

E. Non-Appropriations Clause: Contractor acknowledges that the County is a governmental entity, and the contract validity is based upon the availability of public funding under its authority. In the event that public funds are unavailable and not appropriated for the performance of County's obligations under this contract, then this contract shall automatically expire without penalty to County after written notice to Contractor of the unavailability and non-appropriation of public funds. It is expressly agreed that the County shall only activate this non-appropriation provision as an emergency fiscal measure. The County shall not activate this non-appropriation provision for its convenience, to circumvent the requirements of this contract, or to enable the County to contract with another Contractor for the same supplies or services covered under this Addendum.

F. Hold Harmless/Indemnification Clause: Contractor shall indemnify, defend, save and hold harmless the County of Gila and its officers, officials, agents, and employees (hereinafter referred to as "Indemnitee") from and against any and all claims, actions, liabilities, damages, losses, or expenses (including court costs, attorneys' fees, and costs of claim processing, investigation and litigation)

(hereinafter referred to as "Claims") for bodily injury or personal injury (including death), or loss or damage to tangible or intangible property caused, or alleged to be caused, in whole or in part, by the negligent or willful acts or omissions of Contractor or any of its owners, officers, directors, agents, employees or subcontractors. This indemnity includes any claim or amount arising out of or recovered under the Workers' Compensation Law or arising out of the failure of such Contractor to conform to any federal, state or local law, statute, ordinance, rule, regulation or court decree. It is the specific intention of the parties that the Indemnitee shall, in all instances, except for Claims arising solely from the negligent or willful acts or omissions of the Indemnitee, be indemnified by Contractor from and against any and all claims. It is agreed that the Contractor will be responsible for primary loss investigation, defense and judgment costs where this indemnification is applicable. In consideration of the award of this contract, the Contractor agrees to waive all rights of subrogation against the County, its officers, officials, agents and employees for losses arising from the work performed by the Contractor for the County.

G. Entire Contract Clause: The Contractor and the County have read this Contract and agree to be bound by all of its terms, and further agree that it constitutes the entire contract between the two parties and may only be modified by a written mutual contract signed by the parties. No oral agreement or oral provision outside this Contract shall have any force or effect.

H. Non-Waiver of Enforceability: Failure of the County to enforce, at any time, any of the provisions of this Contract, or to request at any time performance by Contractor of any of the provisions hereof, shall in no way be construed to be a waiver of such provisions, nor in any way affect the validity of this contract or any part thereof, or the right of the County to enforce each and every provision.

I. Severability: *If any provision of this Agreement is held unenforceable, all remaining provisions of this Contract shall remain in full force and effect.*

J. Governing Law: Both parties agree that this Contract shall be governed by the laws of the state of Arizona. The parties further agree that the jurisdiction for any legal disputes arising out of this Contract shall be the Superior Court of the State of Arizona. The parties agree that even if this Contract does not specifically reference any provision required by state or federal law, those state and federally required provisions are incorporated into this Contract by this reference as though they were specifically listed herein.

K. Cancellation: This contract is subject to the cancellation provisions of A.R.S. §38-511.

L. Anti-Terrorism Warranty: Pursuant to A.R.S. §§ 35-393.06(B) and 35-391.06(A) the Contractor certifies that it does not have scrutinized business operations in Iran or Sudan and that they are in compliance with the Export Administration Act and not on the Excluded Parties List.

M. Legal Arizona Workers Act Compliance: Contractor hereby warrants that it will at all times during the term of this Contract comply with all federal immigration laws applicable to Contractor's employment of its employees, and with the requirements of A.R.S. §§ 41-4401 and 23-214(A) (together the "State and Federal Immigration Laws"). Contractor shall further ensure that each subcontractor who performs any work for Contractor under this contract likewise complies with the State and Federal Immigration Laws.

County shall have the right at any time to inspect the books and records of Contractor and any subcontractor in order to verify such party's compliance with the State and Federal Immigration Laws.

Any breach of Contractor's or any subcontractor's warranty of compliance with the State and Federal Immigration Laws, or of any other provision of this section, shall be deemed to be a material breach of this Contract subjecting Contractor to penalties up to and including suspension or termination of this Contract. If the breach is by a subcontractor, and the subcontract is suspended or terminated as a result, Contractor shall be required to take such steps as may be necessary to either self-perform the services that would have been provided under the subcontract or retain a replacement subcontractor as soon as possible so as not to delay project completion.

Contractor shall advise each subcontractor of County's rights, and the subcontractor's obligations, under this Article by including a provision in each subcontract substantially in the following form: "Subcontractor hereby warrants that it will at all times during the term of this contract comply with all federal immigration laws applicable to Subcontractor's employees, and with the requirements of A.R.S. § 23-214 (A). Subcontractor further agrees that County may inspect the Subcontractor's books and records to insure that Subcontractor is in compliance with these requirements. Any breach of this paragraph by Subcontractor will be deemed to be a material breach of this contract subjecting Subcontractor to penalties up to and including suspension or termination of this contract."

This agreement is effective from February 1, 2017 until January 31, 2018.

CDD Representative Signature	***Client Representative Signature***
Michael E. Kossman ***CDD Representative Name (print)***	FOR John Nelson ***Client Representative Name (print)***
Sales Manager ***CDD Representative Title***	County Manager ***Client Representative Title***
02/14/2017 ***Date Signed***	2-23-2017 ***Date Signed***

AMENDMENT NO. 2 to SERVICE AGREEMENT NO. 121014-1

The following amendments are hereby incorporated into the agreement for the below project

---

PEST CONTROL SERVICE FOR NORTHERN GILA COUNTY

ATOMIC PEST CONTROL LLC

Effective February 10, 2015, Gila County and Atomic Pest Control LLC entered into a contract whereby Atomic Pest Control would provide pest control service for Northern Gila County Facilities.

AMENDMENT NO. 1 to **Service Agreement No. 121014-1**, was executed on January 26, 2016 to allow for Gila County to exercise the option to renew the term of the Agreement for one (1) one (1) year term, from February 10, 2016 to February 09, 2017.

Service Agreement No. 121014-1 will expire on February 09, 2017. **Per Article 14-Term,** Gila County shall have the right, at its sole option, to renew the contract for two (2) additional (1) year periods.

AMENDMENT NO. 2 to **Service Agreement No. 121014-1**, will allow for Gila County to exercise the option to renew the term of the Agreement for one (1) one (1) year term, from February 10, 2017 to February 09, 2018, for a contract amount not to exceed Three Thousand Three Hundred Twenty dollars and no/100's ($3,320.00) without prior written approval from the County.

All other terms, conditions and provisions of the original Contract, shall remain the same and apply during the February 10, 2017 to February 09 2018, renewal period.

IN WITNESS WHEREOF, two (2) identical counterparts of this amendment, each which shall include original signatures and for all purposes be deemed an original thereof, have been duly executed by the parties hereinabove named, on this 23rd day of February, 2017.

GILA COUNTY:

Jacque Sandus

For **John Nelson, County Manager**

Date: 2-23-2017

ATOMIC PEST CONTROL LLC

Signature

John Beebe

Print Name

AMENDMENT NO. 1 to SERVICE AGREEMENT NO. 011116

The following amendments are hereby incorporated into the agreement for the below project

BODY WORK FOR VEHICLE B-190

SHERIFF'S OFFICE

Effective January 19, 2017, Gila County and Anderson Collision Center entered into a contract whereby Anderson Collision Center agreed to provide Body Work for Vehicle B-190 for the Sheriff's Office.

The Sheriff's Office would like to increase the original contract amount of Four Thousand Sixty-Two dollars and 89/100's ($4,062.89) by an additional Five Hundred Ninety-Three dollars and 53/100's ($593.53) due to the need of additional parts required for the repair of Vehicle B-190.

Amendment No. 1 to Service Agreement No. 011116 will serve to increase the contract amount by an amount of Five Hundred Ninety-Three dollars and 53/100's ($593.53).

Consequently, the contract is amended to increase the contract amount by $593.53 for a new total contract amount of Four Thousand Six Hundred Fifty-Six dollars and 42/100's ($4656.42).

All other terms, conditions and provisions of the original Contract, shall remain the same and apply during the January 19, 2017 to April 29, 2017 period.

IN WITNESS WHEREOF, two (2) identical counterparts of this amendment, each which shall include original signatures and for all purposes be deemed an original thereof, have been duly executed by the parties hereinabove named, on this 23rd day of February, 2017.

GILA COUNTY

Jacque Sanders

For **John Nelson, County Manager**

Date: 2-23-17

ANDERSON COLLISION CENTER

Signature

Jake Anderson

Print Name