GILA COUNTY
REQUEST FOR INVITATION FOR BIDS

MESA DEL CABALLO STREETS IMPROVEMENT PROJECT-PHASE I

BID CALL 011516

BIDDER'S INFORMATION
CONTRACT DOCUMENTS AND SPECIFICATIONS

BOARD OF SUPERVISORS
Michael A. Pastor, Chairman
Tommie C. Martin, Vice Chairman
John D. Marcanti, Member

COUNTY MANAGER
Don E. McDaniel Jr.

PUBLIC WORKS DIRECTOR
Steve Sanders

INVITATION FOR BIDS
BID CALL NO. 011516

Sealed bids will be received by **Gila County Procurement, in the Guerrero Conference Room, 1400 East Ash St., Globe, AZ 85501,** until **4:00 P.M. (AZ Time), Wednesday, March 23, 2016** for the **Mesa Del Caballo Streets Improvement Project-Phase I, GILA COUNTY, ARIZONA, BID NO. 011516** in strict accordance with the rules and regulations of the Gila County Procurement Code on file in the office of the Gila County Clerk of the Board, Globe, Arizona. **No bids will be accepted after 4:00 P.M. The Bids will be publicly opened and read aloud at 4:00 P.M., Arizona time, at the location and date listed above.**

All Bids shall be made on the Invitation for Bids forms included in the Contract Documents and shall include all applicable taxes.

There is a mandatory site walk through scheduled for 10:00 A.M. (AZ Time), Thursday, March 10, 2016. The site walk will begin at the Barranca Road location in Payson, AZ. Only those companies signed in on the walk through sign-in sheet will be permitted to bid. Plans, Specifications and Contract documents are available and may be obtained from the office of Engineering Services, 928-402-8612, Gila County Public Works Division, 745 North Rose Mofford Way, Globe, AZ.

Each Bid submitted, either by hand, United States Postal Service, or other carrier, shall be sealed and plainly marked **"MESA DEL CABALLO STREETS IMPROVEMENT PROJECT-PHASE I, PAYSON, ARIZONA BID CALL NO. 011516".** All Bids shall be mailed or delivered to the **Gila County Procurement Department, Attention: Jeannie Sgroi, Contracts Administrator, 1400 East Ash St., Globe, AZ 85501**. Gila County Engineering Services and Board of Supervisors of Gila County will not be responsible for those bids submitted that are not marked appropriately or sent to the wrong address. The prevailing clock shall be the atomic clock in the reception area of the Guerrero Complex.

Contractors are invited to be present at the opening of bids but absence will not be considered cause for disqualification.

Contractors shall be responsible for any licenses or permits required by the regulatory agency of the State of Arizona that apply to the performance of this contract.

After the Contractor who is determined to be most advantageous to the county has been selected through the source selection process, negotiations may be conducted for the purpose of developing a recommended Contract for Award.

The Gila County Board of Supervisors reserves the right to reject any or all bids, or to accept any bids, or to waive any informality in any bid, or to withhold the award if deemed in the best interest of Gila County.

Dates advertised in the Arizona Silver Belt: **February 24, 2016** and **March 02, 2016**

Signed:_____ Date: _____/_____/_____
Michael A. Pastor, Chairman of the Board of Supervisors

Signed: _____ Date: _____/_____/_____
Jefferson R. Dalton, Deputy Gila County Attorney, Civil Bureau Chief
***for* Bradley D. Beauchamp, County Attorney**

NOTIFICATION TO BIDDERS

BIDDERS ARE HEREBY NOTIFIED:

1. The bidder must supply all the information required by the bidding documents and specifications. All proposals shall be made on the bid proposal forms prepared by Gila County as part of the Contract Documents. No forms shall be detached from the bid packet. The proposal must include the entire bid packet, in triplicate, and the following forms, **all with original signatures**, must accompany the bidders proposal:

   - Bid Proposal (pages 81 to 83)
   - Bid Schedule (pages 84 to 85)
   - Surety (Bid) Bond (page 86)
   - Qualification & Certification Form (pages 87 to 88)
   - Reference List (pages 89)
   - Affidavit of Non-Collusion (page 90)
   - Subcontracting Certification (page 91)
   - Check List & Addenda Acknowledgment (page 92)
   - Contract (pages 93-99)
   - Contract Performance Bond (page 100)
   - Labor and Materials Bond (page 101)
   - Contract Performance Warranty (page 102)
   - IRS W-9 Form (W-9)

   Failure to include all required documents, all with original signatures, may invalidate the bid. Prices shall include all applicable taxes.

2. **Proposal Guaranty** -Proposals shall be accompanied by a certified check, cashier's check or bid bond for 10 percent (10%) of the total contract price bid.

3. **Delivery of Proposal** - Each bid shall be sealed and plainly marked **"Bid No. 011516 – Mesa Del Caballo Street Improvements Project-Phase I"**, on the outer most envelope or label. If courier is used, bidder shall instruct the courier to deliver the package by **Wednesday, March 23, 2016**, **4:00 P.M.** on the date specified herein, to the Gila County Procurement Department, Attention: Jeannie Sgroi, Contracts Administrator, at 1400 East Ash, Globe, Arizona 85501. **No bids will be accepted after 4:00 P.M. AZ Time, Wednesday, March 23, 2016. Bids will be opened at 4:00 P.M., Wednesday, March 23, 2016.**

4. **Rejection of Bids** -The Owner reserves the right to reject any and all bids, and to waive all or any informalities in the bids.

Notification to Bidders continued…

5. **Plans and Specifications** - Plans, specifications and all other documents required by bidders may be obtained at the address shown below. **A deposit of $20 per set, and $10 for mailing is required, $20 of which will be refunded upon return of the documents in good, usable order within seven (7) days of bid award. Payment shall be by check or money order only. No cash will be accepted.**

   Gila County
   Public Works Division
   745 North Rose Mofford Way
   Globe, Arizona 85501

6. **Arizona Contractor's License** - **Prior to submission of bids**, bidders must have a valid Arizona Contractor's License of a type which meets all criteria and requirements to perform the work as specified in the contract documents in accordance with the **Arizona State Registrar of Contractors**.

7. **Bid Opening Information** – "As Read" Bid Results will be available, when requested, once the bids have been opened, however, information regarding the bid award will not be available until after the Gila County Board of Supervisors has issued a decision regarding the submitted project bids.

8. **Mandatory Pre-Bid Walk Through**
   There is a mandatory site walk through scheduled for **10:00 A.M. (AZ Time), Thursday, March 10, 2016.** The Pre-Bid Walk Through will begin at the Barranca Road location in Payson, Arizona. Only those companies signed in on the walk through sign-in sheet will be permitted to bid.

9. **Request for Clarifications**
   Requests for clarification shall be made to Jeannie Sgroi, Contracts Administrator at jsgroi@gilacountyaz.gov in writing (phone: 928-402-8612, fax: 928-402-4386) submitted no later than 3:00 P.M., AZ time, on Thursday, March 17, 2016**.** A response will be issued to all plan holders no later than 3:00 P.M., AZ time, on Monday, March 21, 2016.

TABLE OF CONTENTS

SPECIAL PROVISIONS

SPECIFICATIONS……..Page 9

GENERAL REQUIREMENTS……Page 10

SECTION 101 DEFINITIONS AND TERMS ……Pages 11-15
101-02 DEFINITIONS

SECTION 102 BIDDING REQUIREMENTS AND CONDITIONS ……Pages 16-19
102-04 CONTENTS OF PROPOSAL FORMS
102-05 ISSUANCE OF PROPOSAL FORMS
102-06 INTERPRETATION OF ESTIMATED PROPOSAL QUANTITIES
102-07 EXAMINATION OF PLANS, SPECIFICATIONS, AND SITE OF WORK
102-08 PREPARATION OF PROPOSAL
102-10 IRREGULAR PROPOSALS
102-11 DELIVERY OF PROPOSALS
102-12 PROPOSAL GUARANTY
102-13 WITHDRAWAL OR REVISION OF PROPOSALS
102-15 PUBLIC OPENING OF PROPOSALS
102-GC1 DISQUALIFICATION OF BIDDERS
102-GC2 PROTESTS

SECTION 103 AWARD AND EXECUTION OF CONTRACT……Pages 20-21
103-01 CONSIDERATION OF PROPOSALS
103-04 AWARD OF CONTRACT
103-05 CANCELLATION OF AWARD
103-06 RETURN OF PROPOSAL GUARANTY
103-07 REQUIREMENT OF CONTRACT BONDS
103-08 EXECUTION OF CONTRACT
103-GC1 APPROVAL OF CONTRACT
103-09 FAILURE TO EXECUTE CONTRACT

SECTION 104 SCOPE OF WORK……Pages 22-27
104-01 INTENT OF CONTRACT
104-02(A) ALTERATION OF WORK AND QUANTITIES
104-02(B) OMITTED ITEMS
104-02(C) EXTRA WORK
104-03 DISPUTE AND RESOLUTION

Table of Contents continued…

104-04 MAINTENANCE OF TRAFFIC
104-05 RIGHTS IN AND USE OF MATERIALS FOUND IN THE WORK
104-08 PREVENTION OF AIR AND NOISE POLLUTION
104-09 PREVENTION OF LANDSCAPE DEFACEMENT; PROTECTION OF STREAMS, LAKES AND RESERVOIRS
104-10 CONTRACTOR'S RESPONSIBILITY FOR WORK
104-14 FINAL CLEAN UP

SECTION 105 CONTROL OF WORK .....Pages 27-34
105-01 AUTHORITY OF THE OWNER'S ENGINEER
105-04 CONFORMITY WITH PLANS AND SPECIFICATIONS
105-06 COORDINATION OF CONTRACT, PLANS AND SPECIFICATIONS
105-07 COOPERATION OF CONTRACTOR
105-08 COOPERATION WITH UTILITY COMPANIES
105-09 COOPERATION BETWEEN CONTRACTORS
105-10 CONSTRUCTION STAKES, LINES AND GRADES
105-11 AUTHORITY AND DUTIES OF INSPECTORS
105-12 INSPECTION OF THE WORK
105-13 REMOVAL OF UNACCEPTABLE AND UNAUTHORIZED WORK
105-14 LOAD RESTRICTIONS
105-15 MAINTENANCE DURING CONSTRUCTION
105-16 FAILURE TO MAINTAIN THE WORK
105-18 OPENING SECTIONS OF THE WORK TO TRAFFIC
105-20 ACCEPTANCE
105-20(A) PARTIAL ACCEPTANCE
105-20(B) FINAL ACCEPTANCE
105-GC1 CONSTRUCTION SCHEDULE
105-GC2 NEGOTIATIONS
105-21 CLAIMS FOR ADJUSTMENT AND DISPUTES

SECTION 106 CONTROL OF MATERIAL .....Pages 34-38

SECTION 107 LEGAL RELATIONS AND RESPONSIBILITY TO PUBLIC .....Pages 38-53
107-01 LAWS TO BE OBSERVED
107-02 PERMITS, LICENSES, AND TAXES
107-03 PATENTED DEVICES, MATERIALS, AND PROCESSES
107-07 SANITARY, HEALTH, AND SAFETY PROVISIONS
107-08 PUBLIC CONVENIENCE AND SAFETY
107-09 BARRICADES, WARNING SIGNS AND HAZARD MARKINGS
107-11 PROTECTION AND RESTORATION OF PROPERTY AND LANDSCAPE
107-13 RESPONSIBILITY FOR DAMAGE CLAIMS
107-14 CONTRACTORS INSURANCE
107-GC1 THIRD PARTY BENEFICIARY CLAUSE

Table of Contents continued…

107-15 CONTRACTOR'S RESPONSIBILITY FOR UTILITY PROPERTY AND SERVICES
107-16 PERSONAL LIABILITY OF PUBLIC OFFICIALS
107-17 NO WAIVER OF LEGAL RIGHTS

SECTION 108 PROSECUTION AND PROGRESS .....Pages 54-60
108-01 SUBLETTING OF CONTRACT
108-02 NOTICE TO PROCEED
108-04 PROSECUTION AND PROGRESS
108-06 CHARACTER OF WORKERS
108-07 METHODS AND EQUIPMENT
108-GC1 TEMPORARY SUSPENSION OF THE WORK
108-08 DETERMINATION AND EXTENSION OF CONTRACT TIME
108-09 FAILURE TO COMPLETE ON TIME
108-10 DEFAULT AND TERMINATION OF CONTRACT
108-GC2 TERMINATION OF CONTRACT FOR NATIONAL EMERGENCIES

SECTION 109 MEASUREMENT AND PAYMENT .....Pages 60-65
109-01 MEASUREMENT OF QUANTITIES
109-02 SCOPE OF PAYMENT
109-03 COMPENSATION FOR ALTERED QUANTITIES
109-04 PAYMENT FOR EXTRA AND FORCE ACCOUNT WORK
109-05 PAYMENT FOR OMITTED ITEMS
109-09 ACCEPTANCE AND FINAL PAYMENT

SECTION 201 CLEARING AND GRUBBING.....Pages 65-66
SECTION 202 REMOVAL OF STRUCTURES AND OBSTRUCTIONS….....Page 66
SECTION 205 GRADING ROADWAY FOR PAVEMENT.....Page 66
SECTION 207 DUST PALLIATIVE.....Pages 66-67
SECTION 303 AGGREGATE SUBBASES AND AGGREGATE BASES….....Page 67
SECTION 403 ASPHALTIC CONCRETE HOTPLANT REQUIREMENTS.....Pages 67-68
SECTION 404 BITUMINOUS TREATMENTS.....Pages 68-69
SECTION 409 ASPHALT CONCRETE (MISCELLANEOUS STRUCTURAL).....Pages 70-73
SECTION 501 PIPE CULVERT AND STORM DRAINS.....Pages 73-74
SECTION 701 MAINTENANCE AND PROTECTION OF TRAFFIC......Page 75
SECTION 810 EROSION CONTROL AND POLLUTION PREVENTION.....Pages 75-76
SECTION 901 MOBILIZATION.....Pages 76-78
SECTION 924 FORCE ACCOUNT WORK (UNFORESEEN CONDITIONS).....Page 78
SECTION 925 CONSTRUCTION SURVEYING AND LAYOUT.....Page 78
SECTION 1005 BITUMINOUS MATERIALS.....Page 79

Table of Contents continued…

CONTRACT FORMS

PROPOSAL ……**Pages 81-83**
BIDDING SCHEDULE ……**Pages 84-85**
SURETY (BID) BOND ……**Page 86**
QUALIFICATION AND CERTIFICATION ……**Pages 87-88**
REFERENCE LIST ……**Page 89**
AFFIDAVIT OF NON-COLLUSION ……**Page 90**
SUBCONTRACTOR CERTIFICATION ……**Page 91**
CHECKLIST AND ADDENDA ACKNOWLEDGMENT ……**Page 92**
CONTRACT ……**Page 93-99**
CONTRACT PERFORMANCE BOND ……**Page 100**
LABOR AND MATERIALS BOND ……**Page 101**
CONTRACT PERFORMANCE WARRANTY ……**Page 102**
IRS W-9 FORM
APPENDIX A – REFERENCE STANDARD DETAILS
APPENDIX B – PROJECT PLANS

SPECIAL PROVISIONS

FOR

MESA DEL CABALLO STREETS IMPROVEMENT PROJECT

The proposed work is located in Gila County, within the subdivision known as Mesa Del Caballo, approximately 2 miles north of the Town of Payson. The work will be performed on the following roads within the subdivision: Sepia, Paloma Vista and Barranca. The work consists of the removal of the existing pavement surface and select pipe culverts, and the installation of new pipe culverts, asphaltic concrete pavement, aggregate base course and other work as shown on the plans (see Appendix B for project plans).

SPECIFICATIONS:

The plans and these Special Provisions reference certain Standard Specifications and Standard Details developed by the Maricopa Association of Governments (MAG) and the Arizona Department of Transportation (ADOT). The following separate documents shall be used accordingly:

Arizona Department of Transportation, Standard Specifications for Road and Bridge Construction, Edition of 2008.
Arizona Department of Transportation, Construction Standard Drawings, 2012 edition.
Maricopa Association of Governments, Uniform Standard Specifications for Public Works Construction, 2015 Edition.
Maricopa Association of Governments, Uniform Standard Details for Public Works Construction, 2015 Edition.

Wherever reference in the above cited Standard Specifications is made to MAG or ADOT it shall refer to Owner as defined in Section 101-02 herein of these Special Provisions.

In the event of any conflict between the plans and Standard Specifications, the plans shall prevail. In the event of any conflict between these Special Provisions and the plans or Standard Specifications, these Special Provisions shall prevail.

GENERAL REQUIREMENTS:

EXISTING UTILITY MANHOLES AND VALVE BOX ADJUSTMENTS

The Contractor shall adjust all manholes and valve boxes as needed per MAG Specifications - Section 345 and MAG Details 391-1, Type C, 391-2 and 422. There shall be no separate measurement or direct payment for this work. The cost being considered as included in other contract items.

FIRE PREVENTION

If during the project, fire restrictions are implemented the contractor shall be responsible for compliance with Tonto National Forest and Gila County fire prevention measures.

CONTRACTOR'S YARD

The Owner shall provide land, right-of-way, and easements for all work specified in this contract, except that the Contractor shall provide additional land if required for the erection of temporary construction facilities for storage of his material, together with right of access to same. The Contractor shall not enter or occupy with men, tools, equipment or materials, any private property without written consent of the Owner thereof.

The Contractor shall submit at the preconstruction conference a map showing the proposed location of the Contractors' yard. The location of the yard is subject to the approval of the Owner. The Contractor is responsible for the security of Contractors' yard and the equipment and materials stored at the yard or construction site. Damage, theft, vandalism, or loss of such equipment or materials is the responsibility of the Contractor. The Contractor will not be compensated for replacement, repair, or refusal of materials by the Engineer, damaged by vandalism or theft. The Contractor will take whatever measures are necessary to secure the Contractors' yard, equipment, and materials. Security measures such as yard fences, security guards, locks, chains, etc. are incidental to the work for this project.

See Section 901 Mobilization for additional information.

CONTRACT TIME

Contractor shall complete all project work within sixty (60) calendar days from the commencement date as specified on the Notice to Proceed from the County.

SECTION 101 DEFINITIONS AND TERMS:

101-01 BLANK

101-02 DEFINITIONS:

Whenever the following terms are used in these specifications, in the contract, in any documents or other instruments pertaining to construction where these specifications govern, the intent and meaning shall be interpreted as follows:

MAG. Maricopa Association of Governments.

ADOT. Arizona Department of Transportation

ADOT STANDARD SPECIFICATIONS. Arizona Department of Transportation Standard Specifications for Road and Bridge Construction, Edition of 2008.

ADVERTISEMENT. A public announcement, as required by local law, inviting bids for work to be performed and materials to be furnished.

ASTM. The American Society for Testing and Materials.

AASHTO. The American Association of State Highway and Transportation Officials.

AWARD. The acceptance, by the Owner, of the successful bidder's proposal.

BIDDER. Any individual, partnership, firm, or corporation, acting directly or through a duly authorized representative, who submits a proposal for the work contemplated.

BOARD OF SUPERVISORS. The Gila County Board of Supervisors acting under the authority of the laws of the State of Arizona.

CALENDAR DAY. Every day shown on the calendar.

CERTIFIED FLAGGER. An individual who has been trained and certified by the Arizona Department of Transportation, an Arizona County or Municipal agency, the Federal Highway Administration, or the Highway agency of another state, to control traffic in a construction zone. Individuals certified outside Arizona must also exhibit familiarity with Arizona laws.

CHANGE ORDER. A written order by the Engineer or Owner to the Contractor covering changes in the plans, specifications, or proposal quantities and establishing the basis of payment and contract time adjustment, if any, for the work affected by such changes. The work, covered by a change order, shall be within the scope of the contract.

Section 101-Definition and Terms continued…

CONSTRUCTION LIMITS. Construction limits shall be defined as that area of the public right-of-way, easement or area shown on the construction plans to be disturbed as a part of the contract for this project.

CONTRACT. The written agreement covering the work to be performed. The awarded contract shall include, but is not limited to: the Advertisement; the Contract form; the Proposal; the Performance Bond; the Payment Bond; any required insurance certificates; the Specifications; the Plans; and any addenda issued to bidders.

CONTRACT ITEM (PAY ITEM). A specific unit of work for which a price is provided in the contract. All pay items on this contract will be measured in English units.

CONTRACT TIME. The number of calendar days, stated in the proposal, allowed for completion of the contract, including authorized time extensions. If a calendar date of completion is stated in the proposal, in lieu of a number of calendar days, the contract shall be completed by that date.

CONTRACTOR. The individual, partnership, firm, or corporation primarily liable for the acceptable performance of the work contracted, and for the payment of all legal debts pertaining to the work, who acts directly or through lawful agents or employees to complete the contract work.

CONTRACTOR'S ENGINEER. The Arizona Registered Professional Civil Engineer, individual, partnership, firm, or corporation, duly authorized by Contractor to be responsible for engineering supervision, quality control and certification of the Contract work.

DEPARTMENT. The term Department in the ADOT Standard Specifications and supplements references the Arizona Department of Transportation. Department shall reference OWNER for this contract work.

ENGINEER. See OWNER.

EQUIPMENT. All machinery, together with the necessary fuel and supplies for upkeep and maintenance including, but not limited to, all tools and apparatus necessary for the proper construction and acceptable completion of the work.

EXTRA WORK. An item of work not provided for in the awarded contract as previously modified by change order or supplemental agreement, but which is found by the Owner's Engineer to be necessary to complete the work within the intended scope of the contract as previously modified.

Section 101-Definition and Terms continued…

INSPECTOR. An authorized representative of the Owner's Engineer assigned to make all necessary quality assurance inspections and tests of the work performed or being performed, or of the materials furnished or being furnished by the Contractor.

INTENTION OF TERMS. Whenever, in these specifications or on the plans, the words "directed," "required," "permitted," "ordered," "designated," "prescribed," or words of like import are used, it shall be understood that the direction, requirement, permission, order, designation, or prescription of the Owner's Engineer is intended; and similarly, the words, "approved," "acceptable," "satisfactory," or words of like import, shall mean approved by, or acceptable to, or satisfactory to the Owner's Engineer, subject in each case to the final determination of the Owner.

Any reference to a specific requirement of a numbered paragraph of the contract specifications or a cited standard shall be interpreted to include all general requirements of the entire section, specification item, or cited standard that may be pertinent to such specific reference.

LABORATORY. A testing laboratory as may be designated or approved by the Owner's Engineer to test construction materials and products.

LABOR AND MATERIALS BOND. The approved form of security furnished by the Contractor and his surety as a guaranty that he will pay in full all bills and accounts for materials and labor used in the construction of the work. Also known as Payment Bond.

MAJOR AND MINOR CONTRACT ITEMS. A major contract item shall be any item that is listed in the proposal, the total cost of which is equal to or greater than 10 percent of the total amount of the awarded contract. All other items shall be considered minor contract items.

MATERIALS. Any substance specified for use in the construction of the contract work.

MUTCD. The Manual on Uniform Traffic Control Devices for Streets and Highways, U.S. Department of Transportation, Federal Highway Administration, 2003 Edition, with current revisions.

NOTICE TO PROCEED. A written notice to the Contractor to begin the actual contract work on a previously agreed to date. If applicable, the Notice to Proceed shall state the date on which the contract time begins.

OWNER. The term Owner shall mean the contracting agency signatory to the contract being Gila County or the "County".

OWNER'S ENGINEER. The individual, partnership, firm, or corporation duly authorized by the Owner to be responsible for engineering supervision of the contract work and acting directly or through an authorized representative.

Section 101-Definition and Terms continued…

PAVEMENT. The combined surface, base course, and sub base course, if any, considered as a single unit.

PERFORMANCE BOND. The approved form of security furnished by the Contractor and his surety as a guaranty that the Contractor will complete the work in accordance with the terms of the contract.

PLANS. The official drawings or exact reproductions, approved by the Owner's Engineer, which show the location, character, dimensions and details of the work to be done and which are to be considered as a part of the contract, supplementary to the specifications.

PROJECT. The agreed scope of work for accomplishing specific tasks.

PROPOSAL (BID, BID PROPOSAL). The written offer of the bidder (when submitted on the approved proposal form) to perform the contemplated work and furnish the necessary materials in accordance with the provisions of the plans and specifications.

PROPOSAL GUARANTY. The security furnished with a proposal to guarantee that the bidder will enter into a contract if his proposal is accepted by the Owner. Also referred to as a Bid Bond.

SPECIFICATIONS. A part of the contract containing the written directions and requirements for completing the contract work. Standards for specifying materials or testing which are cited in the contract specifications by reference shall have the same force and effect as if included in the contract physically.

STRUCTURES. Facilities such as bridges, culverts, catch basins, inlets, retaining walls, cribbing, storm and sanitary sewer lines, water lines, underdrains, electrical ducts, manholes, handholes, lighting fixtures and bases, transformers, flexible and rigid pavements, navigational aids, buildings, vaults, and other manmade features that may be encountered in the work and not otherwise classified herein.

SUBGRADE. The soil that forms the pavement foundation.

SUPERINTENDENT. The Contractor's authorized representative who is present on the work site during progress, and is authorized to receive and fulfill instructions from the Owner's Engineer, and who shall supervise and direct the construction.

SUPPLEMENTAL AGREEMENT. A written agreement between the Contractor and the Owner covering: 1) work that would increase or decrease the total dollar amount of the awarded contract, or any major contract item, by more than 25 percent, such increased or decreased work being within the scope of the originally awarded contract, or 2) work that is not within the scope of the originally awarded contract.

Section 101-Definition and Terms continued…

SURETY. The corporation, partnership, or individual, other than the Contractor, executing payment or performance bonds which are furnished to the Owner by the Contractor.

WORK. The furnishing of all labor, materials, tools, equipment and incidentals necessary or convenient to the Contractor's performance of all duties and obligations imposed by the contract, plans, and specifications.

WORK DAY (WORKING DAY). A work day shall be any day other than a legal holiday, Saturday, or Sunday on which the normal working forces of the Contractor may proceed with regular work for at least 6 hours toward completion of the contract, unless work is suspended for causes beyond the Contractor's control. Saturdays, Sundays and holidays on which the Contractor's forces engage in regular work, after obtaining written permission from the Owners Engineer, which requires the presence of an inspector, will be considered and applied as working days.

WORK WEEK. A work week shall consist of forty (40) hours beginning on Sunday and ending on Saturday. Should the Contractor engage in work exceeding the forty (40) hour work week which requires the presence of an inspector, as determined by the Owners Engineer, the Contractor shall reimburse the County for all overtime hours.

OVERTIME HOURS. Any and all hours worked which are other than a normal work week. Contractor must give prior written notification to the Owners Engineer, for any and all overtime hours to be worked. It shall be at the Owner's discretion to provide an inspector at the worksite to ensure compliance during any and all overtime hours worked.

OVERTIME PAY. Any and all pay resulting from overtime hours worked.

OWNER'S INSPECTOR'S OVERTIME PAY. Any and all pay to the Owner's Inspector for overtime hours worked resulting from the Contractor having received approval for overtime hours. The inspector's overtime pay shall be the actual monies paid by the County and shall be reimbursed by the Contractor to the County. Certified payrolls for the Owner's Inspector's Overtime will be submitted to the Contractor. The cost for the Owner's Inspector's Overtime Pay will be deducted from the Contractor's billing.

SUBSTANTIAL COMPLETION. Per Section 105.19 of the ADOT Standard Specifications unless modified herein.

SECTION 102 BIDDING REQUIREMENTS AND CONDITIONS:

102-01 THRU 102-03 BLANK

102-04 CONTENTS OF PROPOSAL FORMS:

The Owner shall furnish bidders with proposal forms. All papers bound with or attached to the proposal forms are necessary parts of the proposal. The proposal submitted by the bidder must include the entire bid packet.

The plans, specifications, and other documents designated in the proposal, whether attached or not to the proposal, are considered as a part of, and included with, the proposal.

102-05 ISSUANCE OF PROPOSAL FORMS:

The Owner reserves the right to refuse to issue a proposal form to a prospective bidder should such bidder be in default for any of the following reasons:

(a) Failure to comply with any prequalification regulations of the Owner, if such regulations are cited, or otherwise included, in the proposal as a requirement for bidding.
(b) Failure to pay, or satisfactorily settle, all bills due for labor and materials on former contracts in force (with the Owner) at the time the Owner issues the proposal to a prospective bidder.
(c) Contractor default under previous contracts with the Owner.
(d) Unsatisfactory work on previous contracts with the Owner.

102-06 INTERPRETATION OF ESTIMATED PROPOSAL QUANTITIES:

An estimate of quantities of work to be done and materials to be furnished under these specifications is given in the proposal. It is the result of careful calculations and is believed to be correct. It is given only as a basis for comparison of proposals and the award of the contract. The Owner does not expressly, or by implication, agree that the actual quantities involved will correspond exactly therewith; nor shall the bidder plead misunderstanding or deception because of such estimates of quantities, or of the character, location, or other conditions pertaining to the work. **Payment to the Contractor will be made only for the actual quantities of work performed or materials furnished in accordance with the plans and specifications.** It is understood that the quantities may be increased or decreased as hereinafter provided in the subsection titled ALTERATION OF WORK AND QUANTITIES of Section 104-02(A) without in any way invalidating the unit bid prices.

Section 102-Bidding Requirements and Conditions continued…

102-07 EXAMINATION OF PLANS, SPECIFICATIONS, AND SITE OF WORK:
The bidder is expected to carefully examine the site of the proposed work, the proposal, plans, specifications, and contract forms. He shall satisfy himself as to the character, quality, and quantities of work to be performed, materials to be furnished, and as to the requirements of the proposed contract. The submission of a proposal shall be prima facie evidence that the bidder has made such examination and is satisfied as to the conditions to be encountered in performing the work and as to the requirements of the proposed contract, plans and specifications.

If any person contemplating submitting a bid for the proposed contract is in doubt as to the true meaning of any part of the plans, specifications, or other proposed contract documents, or finds discrepancies in, or omissions from the drawings or specifications, he may submit to the Owner's Engineer a written request for an interpretation or correction thereof. The person submitting the request will be responsible for its prompt delivery. Any interpretation or correction of the contract documents will be made only by addendum duly issued and a copy of such addendum will be made or delivered to each person having received a set of such documents. The Owner will not be responsible for any other explanations or interpretations of the contract documents.

Any addenda or bulletins issued during the time of bid preparations, forming a part of the contract documents furnished to the bidder for the preparation of his bid, shall be covered in the bid, and shall be made a part of the contract.

102-08 PREPARATION OF PROPOSAL:
The bidder shall submit his proposal on the forms furnished by the Owner. No forms shall be detached from the bid packet. The proposal must include the entire bid packet. All blank spaces in the proposal forms must be correctly filled in where indicated for each and every item for which a quantity is given. The bidder shall state the price (written in ink or typed) in NUMERALS for which he proposes to do each pay item furnished in the proposal. The TOTAL AGGREGATE AMOUNT bid shall be stated in both WORDS and NUMERALS. A minimum of one (1) original and two (2) copies **all with original signatures** shall be submitted.

The bidder shall sign his proposal correctly and in ink. If the proposal is made by an individual, his name and mailing address must be shown. If made by a partnership, the name and mailing address of each member of the partnership must be shown. If made by a corporation, the person signing the proposal shall give the name of the state under which the laws of the corporation were chartered and the name, titles, and business address of the president, secretary, and the treasurer. Anyone signing a proposal as an agent shall file evidence of his authority to do so and that the signature is binding upon the firm or corporation.

102-09 BLANK

Section 102-Bidding Requirements and Conditions continued…

102-10 IRREGULAR PROPOSALS:
Proposals shall be considered irregular for the following reasons:

(a) If the proposal is on a form other than that furnished by the Owner, or if the Owner's form is altered, or if any part of the proposal form is detached.
(b) If there are unauthorized additions, conditional or alternate pay items, or irregularities of any kind which make the proposal incomplete, indefinite, or otherwise ambiguous.
(c) If the proposal does not contain a unit price for each pay item listed in the proposal, except in the case of authorized alternate pay items, for which the bidder is not required to furnish a unit price.
(d) If the proposal contains unit prices that are obviously unbalanced.
(e) If the proposal is not accompanied by the proposal guaranty specified by the Owner.

The Owner reserves the right to reject any irregular proposal and the right to waive technicalities if such waiver is in the best interest of the Owner and conforms to local laws and ordinances pertaining to the letting of construction contracts.

102-11 DELIVERY OF PROPOSAL:
Each proposal submitted shall be placed in a sealed envelope plainly marked with the project number, name of project, and name and business address of the bidder on the outside. When sent by mail, preferably registered, or courier, the sealed proposal, marked as indicated above, should be enclosed in an additional envelope. No proposal will be considered unless received at the place specified in the advertisement before the time specified. Proposals received after the specified time shall be returned to the bidder unopened.

102-12 PROPOSAL GUARANTY:
Each proposal shall be accompanied by a certified check, cashier’s check or surety bond for ten percent (10%) of the amount of the bid included in the proposal as a guarantee that the Contractor will enter into a contract to perform the proposed work in accordance with the plans and specifications.

102-13 WITHDRAWAL OR REVISION OF PROPOSALS:
A bidder may withdraw or revise (by withdrawal of one proposal and submission of another) a proposal, provided that the bidder's request for withdrawal is received by the Owner in writing or by telegram before the time specified for receipt of bids. Revised proposals must be received at the place specified in the advertisement before the time specified for receipt of bids.

102-14 BLANK

Section 102-Bidding Requirements and Conditions continued…

102-15 PUBLIC OPENING OF PROPOSALS:
Proposals shall be opened and read publicly at the time and place specified in the advertisement. Bidders, their authorized agents, and other interested persons are invited to attend.

Proposals that have been withdrawn (by written or telegraphic request) or received after the time specified shall be returned to the bidder unopened.

102-GC1 DISQUALIFICATION OF BIDDERS:
A bidder shall be considered disqualified for any of the following reasons:

(a) Submitting more than one proposal from the same partnership, firm, or corporation under the same or different name.
(b) Evidence of collusion among bidders. Bidders participating in such collusion shall be disqualified as bidders for any future work of the Owner until any such participating bidder has been reinstated by the Owner as a qualified bidder.
(c) If the bidder is considered to be in "default" for any reason specified in the subsection titled ISSUANCE OF PROPOSAL FORMS of Section 102-05.
(d) Failure to submit all required official bid forms.

102-GC2 PROTESTS:
Only other bidders have the right to protest. A protest of a proposed award or of an award must be filed within ten (10) days after the bid award by the Gila County Board of Supervisors and must be sent to the Board of Supervisors. A protest must be in writing and must include:

(a) Name, address and telephone number of the protester.
(b) Signature of the protester or its representative, and evidence of authority to sign.
(c) Identification of the contract and the solicitation or contract number.
(d) Detailed statement of the legal and factual grounds of protest including copies of relevant documents.
(e) The form of relief requested.

All protests shall be sent to the attention of the Gila County Board of Supervisors, 1400 E. Ash Street, Globe, Arizona 85501.

SECTION 103 AWARD AND EXECUTION OF CONTRACT:

103-01 CONSIDERATION OF PROPOSALS:

After the proposals are publicly opened and read, they will be compared on the basis of the summation of the products obtained by multiplying the estimated quantities shown in the proposal by the unit bid prices. If a bidder's proposal contains a discrepancy between unit bid prices written in words and unit bid prices written in numbers, the unit price written in words, unless obviously incorrect, shall govern.

Until the award of a contract is made, the Owner reserves the right to reject a bidder's proposal for any of the following reasons:

(a) If the proposal is irregular as specified in the subsection titled IRREGULAR PROPOSALS of Section 102-10.
(b) If the bidder is disqualified for any of the reasons specified in the subsection titled DISQUALIFICATION OF BIDDERS of Section 102-GC1.

In addition, until the award of a contract is made, the Owner reserves the right to reject any or all proposals; waive technicalities, if such waiver is in the best interest of the Owner and is in conformance with applicable state and local laws or regulations pertaining to the letting of construction contracts; advertise for new proposals; or proceed with the work otherwise. All such actions shall promote the Owner's best interests.

103-02 THRU 103-03 BLANK

103-04 AWARD OF CONTRACT:

The award of contract, if it is to be awarded, shall be made within forty-five (45) calendar days of the date specified for publicly opening proposals, unless otherwise specified herein.

This contract will be awarded to the responsible bidder whose bid conforms to the invitation and whose bid is the most advantageous to the Owner concerning price, conformity to the specifications and other factors.

103-05 CANCELLATION OF AWARD:

The Owner reserves the right to cancel the award without liability to the bidder, except return of proposal guaranty, at any time before a contract has been fully executed by all parties and is approved by the Owner in accordance with the subsection titled APPROVAL OF CONTRACT of Section 103-GC1.

Section 103-Award and Execution of Contract continued…

103-06 RETURN OF PROPOSAL GUARANTY:
All proposal guaranties, except those of the two (2) lowest bidders, will be returned immediately after the Owner has made a comparison of bids as hereinbefore specified in the subsection titled CONSIDERATION OF PROPOSALS of Section 103-01. Proposal guaranties of the two lowest bidders will be retained by the Owner until such time as an award is made, at which time the unsuccessful bidder's proposal guaranty will be returned as soon as the Owner receives the contract bonds as specified in the subsection titled REQUIREMENTS OF CONTRACT BONDS of Section 103-07.

103-07 REQUIREMENTS OF CONTRACT BONDS:
At the time of the execution of the contract, the successful bidder shall furnish the Owner surety bond or bonds which have been fully executed by the bidder and his surety guaranteeing the performance of the work and the payment of all legal debts that may be incurred by reason of the Contractor's performance of the work. The surety and the form of the bond or bonds shall be acceptable to the Owner. Unless otherwise specified in this subsection, the surety bond or bonds shall be in a sum equal to the full amount of the contract. All bonds shall conform to the requirements of A.R.S. §34-222 and §34-223. §

103-08 EXECUTION OF CONTRACT:
The successful bidder shall sign (execute) the necessary agreements for entering into the contract and return such signed contract to the Owner, along with the fully executed surety bond or bonds specified in the subsection titled REQUIREMENTS OF CONTRACT BONDS of Section 103-07, the Contractor’s Statement of Insurance and an original Certificate of Insurance conforming with the requirements of Section 107-14, within 10 calendar days from the date mailed or otherwise delivered to the successful bidder. If the contract is mailed, special handling is recommended.

103-GC1 APPROVAL OF CONTRACT:
Upon receipt of the contract and contract bond or bonds that have been executed by the successful bidder, the Owner shall complete the execution of the contract in accordance with local laws or ordinances, and return a fully executed contract to the Contractor. Delivery of the fully executed contract to the Contractor shall constitute the Owner's approval to be bound by the successful bidder's proposal and the terms of the contract. **This agreement is subject to cancellation pursuant to A.R.S. §38-511.**

103-09 FAILURE TO EXECUTE CONTRACT:
Failure of the successful bidder to execute the contract as specified in the subsection titled EXECUTION OF CONTRACT of Section 103-08 and furnish an acceptable surety bond or bonds within the 10 calendar day period specified in the subsection titled REQUIREMENTS OF CONTRACT BONDS of Section 103-07 shall be just cause for cancellation of the award and forfeiture of the proposal guaranty, not as a penalty, but as liquidation of damages to the Owner.

SECTION 104 SCOPE OF WORK:

104-01 INTENT OF CONTRACT:

The intent of the contract is to provide for construction and completion, in every detail, of the work described. It is further intended that the Contractor shall furnish all labor, materials, equipment, tools, and supplies required to complete the work in accordance with the plans, specifications, and terms of the contract.

104-02(A) ALTERATION OF WORK AND QUANTITIES:

The Owner reserves and shall have the right to make such alterations in the work as may be necessary or desirable to complete the work originally intended in an acceptable manner. Unless otherwise specified herein, the Owner's Engineer shall be and is hereby authorized to make such alterations in the work as may increase or decrease the originally awarded contract quantities, provided that the aggregate of such alterations does not change the total contract cost or the total cost of any major contract item by more than twenty-five percent (25%) (total cost being based on the unit prices and estimated quantities in the awarded contract). Alterations which do not exceed the twenty-five percent (25%) limitation shall not invalidate the contract nor release the surety, and the Contractor agrees to accept payment for such alterations as if the altered work had been a part of the original contract. These alterations which are for work within the general scope of the contract shall be covered by "Change Orders" issued by the Owner's Engineer. Change order for altered work shall include extensions of contract time where, in the Owner's Engineer's opinion, such extensions are commensurate with the amount and difficulty of added work.

Should the aggregate amount of altered work exceed the twenty-five percent (25%) limitation hereinbefore specified, such excess altered work shall be covered by supplemental agreement. If the Owner and the Contractor are unable to agree on a unit adjustment for any contract item that requires a supplemental agreement, the Owner reserves the right to terminate the contract with respect to the item and make other arrangements for its completion.

All supplemental agreements shall require consent of the Contractor's surety and separate performance and payment bonds.

104-02(B) OMITTED ITEMS:

The Owner's Engineer may, in the Owner's best interest, omit from the work any contract item, except major contract items. Major contract items may be omitted by a supplemental agreement. Such omission of contract items shall not invalidate any other contract provision or requirement.

Should a contract item be omitted or otherwise ordered to be non-performed, the Contractor shall be paid for all work performed toward completion of such item prior to the date of the order to omit such item. Payment for work performed shall be in accordance with the subsection titled PAYMENT FOR OMITTED ITEMS of Section 109-05.

Section 104-Scope of Work continued…

104-02(C) EXTRA WORK:

Should acceptable completion of the contract require the Contractor to perform an item of work for which no basis of payment has been provided in the original contract or previously issued change orders or supplemental agreements, the same shall be called EXTRA WORK. Extra work that is within the general scope of the contract shall be covered by written change order. Change orders for such extra work shall contain agreed unit prices for performing the change order work in accordance with the requirements specified in the order, and shall contain any adjustment to the contract time that, in the Owner's Engineer's opinion, is necessary for completion of such extra work.

When determined by the Owner's Engineer to be in the Owner's best interest, he may order the Contractor to proceed with extra work by force account as provided in the subsection titled PAYMENT FOR EXTRA AND FORCE ACCOUNT WORK of Section 109-04.

Extra work that is necessary for acceptable completion of the project, but is not within the general scope of the work covered by the original contract, shall be covered by an agreement as hereinbefore defined as a SUPPLEMENTAL AGREEMENT.

Any claim for payment of extra work that is not covered by written agreement (change order or supplemental agreement) shall be rejected by the Owner.

104-03 DISPUTE & RESOLUTION:

- **Initial Notification & Dispute of Resolution:** As required by these Specifications or any time the Contractor believes the action or decision of the County, lack of action by the County, or for some other reason will result in or necessitate the revision of the Contract, the County Engineer must be notified immediately. If within two (2) working days the identified issue has not been resolved between the Contractor and the County, the Contractor shall provide a written notice. At a minimum, the written notice shall provide a description of the nature of the issue, the time and date the problem was discovered, and if appropriate, the location of the issue. After initial written notice has been provided, the County Engineer will proceed in accordance with *MAG Uniform Standard Specifications Subsection 104.2.* In addition to proceeding in accordance with *Subsection 104.2,* the Contractor and the County must make every effort to resolve the issue identified in the initial notice. Only if the issue cannot be quickly resolved will it be necessary to proceed to the next step in accordance with *MAG Specs Subsection 110.2.2 Dispute Resolution.*

Section 104-Scope of Work continued…

- **Process for Dispute Resolution:** If the Contractor rejects the decision of the County according to *Subsection 110.2.2(B)*, the Contractor may begin the Administration Process to resolve the dispute. All dispute resolutions shall be handled in accordance with *MAG Spec's Subsection 110.3, Administrative Process for Dispute Resolution.*

The administrative process for the resolution of disputes is sequential in nature and is composed of the following levels: Level I (County Project Manager), Level II (County Engineer, Level III (Public Works Director).

The provision set forth in *Subsection 110.2* is a contractual obligation assumed by the Contractor in executing the Contract. It is understood that the Contractor will be forever barred from recovering against the County if the Contractor fails to give notice of any act or failure to act, by the County, or the happening of any event, thing, or occurrence, in accordance with *Subsection 104.2*, Alteration of Work.

Dispute Review Board: If the Dispute Review Board is utilized as prescribed in *Subsection 110.3.3*, the County Engineer shall be notified within thirty (30) days after the Level III Representative decision. The Dispute Review Board is a three (3) member board independent of the parties involved in the issue. The County and Contractor shall each select a member for this board. The third (3rd) member shall be a mutually agreed upon independent member. This Review Board must be selected within fourteen (14) calendar days after notice to the Level III Representative. Each member shall agree to impartially serve the County and Contractor. Fees and expenses of the Board Members are to be shared equally by the County and the Contractor. The Dispute Review Board shall meet within thirty (30) days of the selection of the board, unless, by mutual agreement, another date is selected. The scope of the Dispute Review Board shall be restricted and limited to the matters originally presented to the Level III Representative for decision or determination and shall include no other matters. The Board shall consider and evaluate the dispute and render a written decision that assigns financial responsibilities and allocates adjustments in the contact time, if applicable, within seven (7) calendar days after the meeting. The decision of the Dispute Review Board will be final.

Section 104-Scope of Work continued…

104-04 MAINTENANCE OF TRAFFIC:
It is the explicit intention of the contract that the safety of all traffic, vehicular and pedestrian, as well as the Contractor's equipment and personnel, is the most important consideration.

With respect to his own operations and the operations of all his subcontractors, the Contractor shall provide marking, lighting, and other acceptable means of identifying personnel, equipment, vehicles, storage areas, and any work area or condition that may be hazardous to the operation of all traffic, vehicular and pedestrian.

When the contract requires the maintenance of vehicular traffic on an existing road, street, or highway during the Contractor's performance of work that is otherwise provided for in the contract, plans, and specifications, the Contractor shall keep such road, street, or highway open to all traffic and shall provide such maintenance as may be required to accommodate traffic. The Contractor shall furnish, erect, and maintain barricades, warning signs, flaggers, and other traffic control devices in reasonable conformity with the MUTCD, unless otherwise specified herein. The Contractor shall also construct and maintain in a safe condition any temporary connections necessary for ingress to and egress from abutting property or intersecting roads, streets or highways. Unless otherwise specified herein, the Contractor will not be required to furnish snow removal for such existing road, street, or highway.

The Contractor shall make his own estimate of all labor, materials, equipment, and incidentals necessary for providing the maintenance of pedestrian and vehicular traffic as specified in this subsection.

104-05 RIGHTS IN AND USE OF MATERIALS FOUND IN THE WORK:
Should the Contractor encounter any materials such as (but not restricted to) sand, stone, gravel, slag, or concrete slabs within the established lines, grades, or grading sections, the use of which is intended by the terms of the contract to be either embankment or waste, he may at his option either:

(a) Use such material in another contract item, providing such use is approved by the Owner's Engineer and is in conformance with the contract specifications applicable to such use; or,
(b) Remove such material from the site, upon written approval of the Owner's Engineer; or,
(c) Use such material for his own temporary construction on site; or,
(d) Use such material as intended by the terms of the contract.

Section 104-Scope of Work continued…

Should the Contractor wish to exercise option (a), (b), or (c), he shall request the Owner's Engineer's approval in advance of such use. Should the Owner's Engineer approve the Contractor's request to exercise option (a), (b), or (c), the Contractor shall be paid for the excavation or removal of such material at the applicable contract price. The Contractor shall replace, at his own expense, such removed or excavated material with an agreed equal volume of material that is acceptable for use in constructing embankment, backfills, or otherwise to the extent that such replacement material is needed to complete the contract work. The Contractor shall not be charged for his use of such material so used in the work or removed from the site.

Should the Owner's Engineer approve the Contractor's exercise of option (a), the Contractor shall be paid, at the applicable contract price, for furnishing and installing such material in accordance with requirements of the contract item in which the material is used.

It is understood and agreed that the Contractor shall make no claim for delays by reason of his exercise of option (a), (b), or (c).

The Contractor shall not excavate, remove, or otherwise disturb any materials, structure, or part of a structure which is located outside the lines, grades, or grading sections established for the work, except where such excavation or removal is provided for in the contract, plans, or specifications.

104-06 THRU 104-07 BLANK

104-08 PREVENTION OF AIR AND NOISE POLLUTION: Per Section 104.08 of the ADOT Standard Specifications unless modified herein.

104-09 PROTECTION OF LANDSCAPE DEFACEMENT; PROTECTION OF STREAMS, LAKES AND RESERVOIRS: Per Section 104.09 of the ADOT Standard Specifications unless modified herein.

104-10 CONTRACTOR'S RESPONSIBILITY FOR WORK:
Until the Owner's Engineer's final written acceptance of the entire completed work, excepting only those portions of the work accepted in accordance with the subsection titled PARTIAL ACCEPTANCE of Section 105-20(A), the Contractor shall have the charge and care thereof and shall take every precaution against injury or damage to any part due to the action of the elements or from any other cause, whether arising from the execution or from the non-execution of the work. The Contractor shall rebuild, repair, restore, and make good all injuries or damages to any portion of the work occasioned by any of the above causes before final acceptance and shall bear the expense thereof except damage to the work due to unforeseeable causes beyond the control of and without the fault or negligence of the Contractor, including but not restricted to acts of God such as earthquake, tidal wave, tornado, hurricane or other cataclysmic phenomenon of nature, or acts of the public enemy or of governmental authorities.

Section 104-Scope of Work continued…

If the work is suspended for any cause whatever, the Contractor shall be responsible for the work and shall take such precautions necessary to prevent damage to the work. The Contractor shall provide for normal drainage and shall erect necessary temporary structures, signs, or other facilities at his expense.

104-11 thru 104-13 BLANK

104-14 FINAL CLEAN UP:
Before final acceptance, all private or public property and grounds occupied by the Contractor in connection with the work shall be cleaned of all rubbish, excess materials, temporary structures and equipment, and all parts of the work shall be left in a condition acceptable to the Owner's Engineer.

SECTION 105 CONTROL OF WORK:

105-01 AUTHORITY OF THE OWNER'S ENGINEER:
The Owner shall decide any and all questions which may arise as to the quality and acceptability of materials furnished, based upon the Contractor's Engineer's certification for the quality and acceptability work performed, and as to the manner of performance and rate of progress of the work. He shall decide all questions which may arise as to the interpretation of the specifications or plans relating to the work, the fulfillment of the contract on the part of the Contractor, and the rights of different contractors on the project. The Owner shall review and determine, based upon the Contractor's Engineer's certifications on amounts, quality of work and materials furnished, the amount and quality of the several kinds of work performed and materials furnished which are to be paid for under contract.

105-02 THRU 105-03 BLANK

105-04 CONFORMITY WITH PLANS AND SPECIFICATIONS:
All work and materials furnished shall be the full responsibility of the Contractor and shall be in reasonably close conformity with the lines, grades, grading section, cross sections, dimensions, material requirements, and testing requirements that are specified (including specified tolerances) in the contract, plans, or specifications, and shall be certified by the Contractor's Engineer.

Section 105-Control of Work continued…

If the Owner finds the materials furnished, work performed, or the finished product not within reasonably close conformity with the plans and specifications, but that the portion of the work affected will, in his opinion, result in a finished product having a level of safety, economy, durability and workmanship acceptable to the Owner, he will advise the Owner of his determination that the affected work be accepted and remain in place. In this event, the Owner will document his determination and recommend to the Owner a basis of acceptance which will provide for an adjustment in the contract price for the affected portion of the work. The Owner's determination and recommended contract price adjustments will be based on good engineering judgment and on such tests or retests by the Contractor's Engineer, and at the Contractor's expense, of the affected work as are, in his opinion, needed. Changes in the contract price shall be covered by contract modifications (change order or supplemental agreement) as applicable.

If the Owner finds the materials furnished, work performed, or the finished product are not in reasonably close conformity with the plans and specifications and have resulted in an unacceptable finished product, the affected work or materials shall be removed and replaced or otherwise corrected by and at the expense of the Contractor in accordance with the Owner written orders.

For the purpose of this subsection, the term "reasonably close conformity" shall not be construed as waiving the Contractor's responsibility to complete the work in accordance with the contract, plans and specifications. The terms shall not be construed as waiving the Owner's right to insist on strict compliance with the requirements of the contract, plans, and specifications during the Contractor's prosecution of the work, when, in the Owner's opinion, such compliance is essential to provide an acceptable finished portion of the work.

For the purpose of this subsection, the term "reasonably close conformity" is also intended to provide the Owner with the authority to use good engineering judgment in his determinations as to acceptance of work that is not in strict conformity but will provide a finished product equal to or better than that intended by the requirements of the contract, plans and specifications.

105-05 BLANK

Section 105-Control of Work continued…

105-06 COORDINATION OF CONTRACT, PLANS AND SPECIFICATIONS:
The contract, plans, specifications, and all referenced standards cited are essential parts of the contract requirements. A requirement occurring in one is as binding as though occurring in all. They are intended to be complementary and to describe and provide for a complete work. In case of discrepancy or conflict, the order in which they govern shall be as follows:

(A) Supplemental Agreements
(B) Special Provisions
(C) Project Plans
(D) Standard Drawings
(E) Standard Specifications

The Contractor shall not take advantage of any apparent error or omission on the plans or specifications. In the event the Contractor discovers any apparent error or discrepancy, he shall immediately call upon the Owner for his interpretation and decision, and such decision shall be final.

105-07 COOPERATION OF CONTRACTOR: Per Section 105.07 of the ADOT Standard Specifications unless modified herein.

105-08 COOPERATION WITH UTILITY COMPANIES: Per Section 105.08 of the ADOT Standard Specifications unless modified herein.

105-09 COOPERATION BETWEEN CONTRACTORS: Per Section 105.09 of the ADOT Standard Specifications unless modified herein.

105-10 CONSTRUCTION STAKES, LINES AND GRADES: Per Section 105.10 of the ADOT Standard Specifications unless modified herein.

105-11 AUTHORITY AND DUTIES OF INSPECTORS:
Inspectors employed by the Owner shall be authorized to inspect all work done and all material furnished. Such inspection may extend to all or any part of the work and to the preparation, fabrication, or manufacture of the materials to be used. Inspectors are not authorized to revoke, alter, or waive any provision of the contract. Inspectors are not authorized to issue instructions contrary to the plans and specifications or to act as foreman for the Contractor.

Inspectors employed by the Owner are authorized to notify the Contractor or his representative of any failure of the work or materials to conform to the requirements of the contract, plans, or specifications and to reject such nonconforming materials in question until such issues can be referred to the Owner's Engineer for his decision.

105-12 INSPECTION OF WORK: Per Section 105.12 of the ADOT Standard Specifications unless modified herein.

Section 105-Control of Work continued…

105-13 REMOVAL OF UNACCEPTABLE AND UNAUTHORIZED WORK:
All work which does not conform to the requirements of the contract, plans, and specifications will be considered unacceptable, unless otherwise determined acceptable by the Owner as provided in the subsection titled CONFORMITY WITH PLANS AND SPECIFICATIONS of Section 105-04.

Unacceptable work, whether the result of poor workmanship, use of defective materials, damage through carelessness, or any other cause found to exist prior to the final acceptance of the work, shall be removed immediately and replaced in an acceptable manner in accordance with the provisions of the subsection titled CONTRACTOR'S RESPONSIBILITY FOR WORK of Section 104-10.

No work shall be done without lines and grades having been given by the Contractor's Engineer and authorized by the Owner. Work done contrary to the instructions of the Owner, work done beyond the lines shown on the plans or as given, except as herein specified, or any extra work done without authority will be considered as unauthorized and will not be paid for under the provisions of the contract. Work so done may be ordered removed or replaced at the Contractor's expense.

Upon failure on the part of the Contractor to comply as soon as possible with any order of the Owner made under the provisions of this subsection, the Owner will have authority to cause unacceptable work to be remedied or removed and replaced and unauthorized work to be removed and to deduct the costs (incurred by the Owner) from any monies due or to become due the Contractor.

105-14 LOAD RESTRICTIONS: Per Section 105.14 of the ADOT Standard Specifications unless modified herein.

105-15 MAINTENANCE DURING CONSTRUCTION:
The Contractor shall maintain the work during construction and until the work is accepted. This maintenance shall constitute continuous and effective work prosecuted day by day, with adequate equipment and forces so that the work is maintained in satisfactory condition at all times.

In the case of a contract for the placing of a course upon a course or subgrade previously constructed, the Contractor shall maintain the previous course or subgrade during all construction operations.

All costs of maintenance work during construction and before the project is accepted shall be included in the unit prices bid on the various contract items, and the Contractor will not be paid an additional amount for such work.

Section 105-Control of Work continued…

105-16 FAILURE TO MAINTAIN THE WORK:
Should the Contractor at any time fail to maintain the work as provided in the subsection titled MAINTENANCE DURING CONSTRUCTION of Section 105-15, the Owner shall immediately notify the Contractor of such noncompliance. Such notification shall specify a reasonable time within which the Contractor shall be required to remedy such unsatisfactory maintenance conditions. The time specified will give due consideration to the emergency that exists.

Should the Contractor fail to respond to the Owner notification, the Owner may suspend any work necessary for the Owner to correct such unsatisfactory maintenance condition, depending on the emergency that exists. Any maintenance cost incurred by the Owner shall be deducted from monies due or to become due the Contractor.

105-17 BLANK

105-18 OPENING SECTIONS OF THE WORK TO TRAFFIC:
Should it be necessary for the Contractor to complete portions of the contract work for the beneficial occupancy of the Owner prior to completion of the entire contract, such "phasing" of the work shall be specified herein and indicated on the plans. When so specified, the Contractor shall complete such portions of the work on or before the date specified or as otherwise specified. The Contractor shall make his own estimate of the difficulties involved in arranging his work to permit such beneficial occupancy by the Owner as described below:

Upon completion of any portion of the work listed above, with certification of the work by the Contractor's Engineer, such portion shall be accepted by the Owner in accordance with the subsection titled PARTIAL ACCEPTANCE of Section 105-20(A).

No portion of the work may be opened by the Contractor for public use until ordered by the Owner's Engineer in writing. Should it become necessary to open a portion of the work to public traffic on a temporary or intermittent basis, such openings shall be made when, in the opinion of the Owner's Engineer, such portion of the work is in an acceptable condition to support the intended traffic. Temporary or intermittent openings are considered to be inherent in the work and shall not constitute either acceptance of the portion of the work so opened or a waiver of any provision of the contract. Any damage to the portion of the work so opened that is not attributable to traffic which is permitted by the Owner shall be repaired by the Contractor at his expense.

The Contractor shall make his own estimate of the inherent difficulties involved in completing the work under the conditions herein described and shall not claim any added compensation by reason of delay or increased cost due to opening a portion of the contract work.

105-19 BLANK

Section 105-Control of Work continued…

105-20 ACCEPTANCE:

(A) PARTIAL ACCEPTANCE:

If at any time during the prosecution of the project the Contractor substantially completes a usable unit or portion of the work, the occupancy of which will benefit the Owner, he may request the Owner to make final inspection of that unit. If the Owner finds upon inspection that the unit has been satisfactorily completed in compliance with the contract, and certified to be in compliance by the Contractor's Engineer, he may accept it as being completed, and the Contractor may be relieved of further responsibility for that unit, subject to stated guarantees. Such partial acceptance and beneficial occupancy by the Owner shall not void or alter any provision of the contract.

(B) FINAL ACCEPTANCE:

Upon due notice from the Contractor of presumptive completion of the entire project, and certification of completion and compliance to the approved plans by the Contractor's Engineer, Owner will make an inspection. If all construction provided for and contemplated by the contract is found to be completed in accordance with the contract, plans, and specifications, such inspection shall constitute the final inspection. The Owner shall notify the Contractor in writing of final acceptance as of the date of the final inspection.

If, however, the inspection discloses any work, in whole or in part, as being unsatisfactory, the Owner will give the Contractor the necessary instructions for correction of same, and the Contractor shall immediately comply with and execute such instructions. Upon correction of the work, and recertification by the Contractor's Engineer, another inspection will be made which shall constitute the final inspection, provided the work has been satisfactorily completed. In such event, the Owner will make the final acceptance and notify the Contractor in writing of this acceptance as of the date of final inspection.

105-GC1 CONSTRUCTION SCHEDULE:

Prior to commencement of the work the Contractor shall prepare and submit to the Owner for review, a written schedule covering the general sequence of the work to be performed on a bi-weekly basis. The work schedule, after review and acceptance by the Owner, shall not be changed without the written consent of the Owner. The Contractor shall assume the full responsibility for performing the work in an orderly procedure under the Contract.

Section 105-Control of Work continued…

105-GC2 NEGOTIATIONS:
It is the intent of the County to award a Contract to the lowest responsible Bidder provided the Bid has been submitted in accordance with the requirements of the Bid Documents, is judged reasonable, and does not exceed the funds available.

(a) The County shall have the authority to negotiate with the lowest bidder to reduce the scope of the Project in the event that all responsive bids exceed the Project budget.

Bids shall be made available for public inspection by appointment only after the award has been made by the Board of Supervisors. The Board of Supervisors has the sole authority to award bids and any statement by any employee of the County is not binding on the Board.

The following criteria will be considered a part of the evaluation process:

(a) Competence and responsibility of Bidder.
(b) Qualifications and experience of Bidder.
(c) Past performance of Bidder.
(d) Conformity with bidding requirements and general considerations.
(e) Record of timely completion of punch lists on past projects.

Negotiations With Individual Contractors: Gila County Public Works Division shall establish procedures and schedules for conducting Negotiations. Disclosure of one (1) Contractor's Price or any information derived from competing Bid Prices or any information derived from competing Bids is prohibited.

(a) Any response to a request for clarification of a bid shall be in writing.
(b) The Public Works Division shall keep a record of all negotiations.

For the purpose of conducting Negotiations with Contractors, Gila County may use any of the following methods that, in their judgment, best meets the unique requirements.

(a) Concurrent Negotiations: Negotiations may be conducted concurrently with responsible Contractors for the purpose of determining source selection and/or Contract Award.
(b) Exclusive Negotiations: A determination may be made by the Public Works Director to enter into exclusive negotiations with the responsible Contractor whose bid is determined in the selection process to be the most Advantageous to Gila County.

Section 105-Control of Work continued…

Exclusive Negotiations may be conducted subsequent to concurrent Negotiations or may be conducted without requiring previous concurrent Negotiations.

(a) A determination to conduct exclusive Negotiations shall not constitute a Contract Award nor shall it confer any property rights to the successful bidder.

If exclusive Negotiations are conducted and an agreement is not reached, the County may enter into exclusive Negotiations with the next highest ranked Contractor without the need to repeat the formal Solicitation process.

105-21 CLAIMS FOR ADJUSTMENT AND DISPUTES:

If for any reason the Contractor deems that additional compensation is due him for work or materials not clearly provided for in the contract, plans, or specifications or previously authorized as extra work, he shall notify the Owner in writing of his intention to claim such additional compensation before he begins the work on which he bases the claim. If such notification is not given or the Owner is not afforded proper opportunity by the Contractor for keeping strict account of actual cost as required, then the Contractor hereby agrees to waive any claim for such additional compensation. Such notice by the Contractor and the fact that the Owner has kept account of the cost of the work shall not in any way be construed as proving or substantiating the validity of the claim. When the work on which the claim for additional compensation is based has been completed, the Contractor shall, within 10 calendar days, submit his written claim, along with certification by the Contractor's Engineer, to the Owner for consideration in accordance with local laws or ordinances.

Nothing in this subsection shall be construed as a waiver of the Contractor's right to dispute final payment based on differences in measurements or computations.

SECTION 106 CONTROL OF MATERIAL: Per Section 106 of the ADOT Standard Specifications unless modified herein.

106.04(A) General: the fourth and fifth paragraphs of the Standard Specifications are revised to read:

The sampling, testing, and acceptance of materials shall be in accordance with the requirements of the specifications, in conjunction with the following:

- The ADOT Materials Testing Manual.
- The ADOT Materials Policy and Procedure Directives Manual.
- Applicable Federal, AASHTO, or ASTM specifications or test designations.
- Applicable specifications or test designations of other nationally recognized organizations.

Unless otherwise specified, whenever a reference is made to an Arizona Test Method or an ADOT Materials Policy and Procedure Directive, it shall mean the test method or policy and procedure directive in effect on the bid opening date.

Section 106-Control of Material continued…

106.04(C)(2) Quality Control Laboratory: the first paragraph is revised to read:
All field and laboratory sampling and testing shall be performed by a laboratory or laboratories approved by the Department. The requirements for approval of laboratories are specified in ADOT Materials Policy and Procedure Directive No. 19, "ADOT System for the Evaluation of Testing Laboratories". Approved laboratories, and the test methods for which they are approved to perform, are listed in the "ADOT Directory of Approved Materials Testing Laboratories". Approved test methods listed in the "ADOT Directory of Approved Materials Testing Laboratories" do not include field sampling and testing procedures. When field sampling and testing procedures are performed, the appropriate valid Arizona Technical Testing Institute (ATTI) and/or American Concrete Institute (ACI) certification(s) are required. ADOT Materials Policy and Procedure Directive No. 19, "ADOT System for the Evaluation of Testing Laboratories" and the "ADOT Directory of Approved Materials Testing Laboratories" may be obtained on the internet from the ADOT Materials Quality Assurance Section website.

106.04(C)(6) Weekly Quality Control Reports: of the Standard Specifications is revised to read:
The contractor shall submit Weekly Quality Control Reports to the Engineer. The weekly reports shall be complete and accurate, and shall state the types of work which have been performed during the report period. The report shall also include the process control measures taken to assure quality. The report shall provide sample identification information for materials tested during the report period, including sample number, date sampled, sample location, first and last name of person obtaining sample, and original source of material. The report shall also provide the results for all required tests and any retests, corrective actions, and other information relevant to quality control. The report shall include daily diaries for each day of testing, a weekly summary, the ADOT TRACS number, and the testing laboratory's project identification number.

Except as stated in the following paragraph, the weekly quality control report shall be prepared using standard forms provided by the Department. The standard forms are available on the Department's website at www.azdot.gov. After accessing the Department's website, select "Business", "Engineering and Construction", "Construction", "Contractors' Information", "Forms and Documents", and then "Weekly Quality Control Forms". Except for the daily diaries, all documentation and information required on the forms shall be typed. Daily diaries may be hand-written if acceptable to the Engineer. The weekly report shall be submitted to the Engineer in paper form with a transmittal letter signed by the contractor's quality control manager.

Section 106-Control of Material continued…

In lieu of using the standard weekly quality control forms available on the Department's website, the contractor or testing laboratory may prepare the weekly report using proprietary or other software, if acceptable to the Engineer, provided that all required information is included, the format is comparable to the Department's standard format, and the report is submitted in paper form with the required transmittal letter.

The report period shall end at midnight of each Friday, and the report shall be submitted to the Engineer no later than 5:00 p.m. of the following Wednesday. The Engineer will verify that the report is timely, complete and accurate.

Reports that are not submitted by the above-referenced deadline shall be considered delinquent. Reports that are submitted by the above-referenced deadline, but are not complete and accurate, shall also be considered delinquent. In either case monies shall be deducted from the contractor's monthly estimate in accordance with the requirements for Contractor Quality Control, as specified in these special provisions.

106.05 Certificates: of the Standard Specifications is revised to read:

(A) General:

The contractor shall submit to the Engineer an original or copy of either a Certificate of Compliance or a Certificate of Analysis, as required, prior to the use of any materials or manufactured assemblies for which the specifications require that such a certificate be furnished.

Certificates shall be specifically identified as either a "Certificate of Compliance" or a "Certificate of Analysis".

The Engineer may permit the use of certain materials or manufactured assemblies prior to, or without, sampling and testing if accompanied by a Certificate of Compliance or Certificate of Analysis, as herein specified. Materials or manufactured assemblies for which a certificate is furnished may be sampled and tested at any time, and, if found not in conformity with the requirements of the plans and the specifications, will be subject to rejection, whether in place or not.

Certificates of Compliance and Certificates of Analysis shall comply with the requirements specified herein, the ADOT Materials Testing Manual, and applicable ADOT Materials Policy and Procedure Directives.

Section 106-Control of Material continued…

(B) Certificate of Compliance:
A Certificate of Compliance shall be submitted on the manufacturer's or supplier's official letterhead, and shall contain the following information:

(1) The current name, address, and phone number of the manufacturer or supplier of the material.
(2) A description of the material supplied.
(3) Quantity of material represented by the certificate.
(4) Means of material identification, such as label, lot number, or marking.
(5) A statement that the material complies in all respects with the requirements of the cited specifications. Certificates shall state compliance with the cited specification, such as AASHTO M 320, ASTM C 494; or specific table or subsection of the Arizona Department of Transportation Standard Specifications or Special Provisions. Certificates may cite both, if applicable.
(6) A statement that the individual identified in item seven below has the legal authority to bind the manufacturer or the supplier of the material.
(7) The name, title, and signature of the responsible individual. The date of the signature shall also be given.

Each of the first six items specified above shall be completed prior to the signing of the certificate as defined in item seven. No certificate will be accepted that has been altered, added to, or changed in any way after the authorized signature has been affixed to the original certificate. However, notations of a clarifying nature, such as project number, contractor, or quantity shipped are acceptable, provided the basic requirements of the certificate are not affected.

A copy or facsimile reproduction of the original certificate will be acceptable; however, the original certificate shall be made available upon request.

(C) Certificate of Analysis:
A Certificate of Analysis shall include all the information required for a Certificate of Compliance and, in addition, shall include the results of all tests required by the specifications.

106.15 Domestic Materials and Products:
Steel and iron materials and products used on all projects shall comply with the current "Buy America" requirements of 23 CFR 635.410.

All manufacturing processes to produce steel and iron products used on this project shall occur in the United States. Raw materials used in manufacturing the steel and iron products may be foreign or domestic. Steel or iron not meeting these requirements may be used in products on this project provided that the invoiced cost to the contractor for such steel products incorporated into the work does not exceed either one-tenth of one percent of the total (final) contract cost or $2,500, whichever is greater.

Section 106-Control of Material continued…

Any process which involves the application of a coating to iron or steel shall occur in the United States. These processes include epoxy coating, galvanizing, painting, or any other coating which protects or enhances the value of covered material.

The requirements specified herein shall only apply to steel and iron products permanently incorporated into the project. "Buy America" provisions do not apply to temporary steel items, such as sheet piling, temporary bridges, steel scaffolding and falsework, or to materials which remain in place at the contractor's convenience.

The contractor shall furnish the Engineer with Certificates of Compliance, conforming to the requirements of Subsection 106.05, which state that steel or iron products incorporated in the project meet the requirements specified. Certificates of Compliance shall also certify that all manufacturing processes to produce steel or iron products, and any application of a coating to iron or steel, occurred in the United States.

Convict-produced materials may not be used unless the materials were produced prior to July 1, 1991 at a prison facility specifically producing convict-made materials for Federal-aid construction projects.

SECTION 107 LEGAL RELATIONS AND RESPONSIBILITY TO PUBLIC:

107-01 LAWS TO BE OBSERVED:

The Contractor shall keep fully informed of all Federal and State laws, all local laws, ordinances, and regulations and all orders and decrees of bodies or tribunals having any jurisdiction or authority, which in any manner affect those engaged or employed on the work, or which in any way affect the conduct of the work. He shall at all times observe and comply with all such laws, ordinances, regulations, orders, and decrees; and shall protect and indemnify the Owner and all his officers, agents, or servants against any claim or liability arising from or based on the violation of any such law, ordinance, regulation, order, or decree, whether by himself or his employees.

Laws and Ordinances: This agreement shall be enforced under the laws of the State of Arizona and Gila County. The Contractor shall maintain in current status all Federal, State and Local licenses and permits required for the operation of the business conducted by the Contractor. The Contractor shall comply with the applicable provisions of the Americans with Disabilities Act (Public Law 101-336, 42 U.S.C. 12101-12213) and applicable federal regulations under the Act.

Section 107-Legal Relations and Responsibility to Public continued…

107-02 PERMITS, LICENSES, AND TAXES: Per Section 107.02 of the ADOT Standard Specifications unless modified herein.

Before the Contractor or any subcontractor begins work the Contractor must apply for and obtain a Right of Way (ROW) use permit from the Gila County Public Works Engineering Department. A ROW permit application can be obtained at either the Globe or Payson Public Works office or from the Gila County website at the following link http://www.gilacountyaz.gov/government/public_works/engineering/index.php. A traffic control plan applicable to the work being performed and in accordance with MUTCD standards must be attached to the permit application when submitted. Gila County will waive the fee for the ROW permit.

107-03 PATENTED DEVICES, MATERIALS, AND PROCESSES: Per Section 107.03 of the ADOT Standard Specifications unless modified herein.

107-04 THRU 107-06 BLANK

107-07 SANITARY, HEALTH, AND SAFETY PROVISIONS:
The Contractor shall provide and maintain in a neat, sanitary condition such accommodations for the use of his employees as required to comply with the requirements of the State and local boards of health, or of other bodies or tribunals having jurisdiction. Contractor is responsible for supplying toilet and hand washing facilities at work site.

Attention is directed to Federal, State and local laws, rules and regulations concerning construction safety and health standards. The Contractor shall not require any worker to work in surroundings or under conditions which are unsanitary, hazardous, or dangerous to his health or safety as determined under the Arizona Occupational Safety and Health Standards for Construction, adopted by the Industrial Commission of Arizona pursuant to the Authority in A.R.S. §23-410.

Each employee of the Contractor and Sub-Contractor shall read the County Safety & Loss Control Procedures book and sign an acknowledgement.

Contractor Safety Tailgate Meetings: Contractor shall conduct tailgate safety meetings regularly to ensure that safety on the job is given priority.

Accident/Injury Procedure: Contractor shall contact the Owner and the Gila County Risk Management Division within twenty-four (24) hours of the occurrence of an accident or injury arising out of the Contractor's work under this contract.

Section 107-Legal Relations and Responsibility to Public continued…

Unsafe Acts: Contractor employees are encouraged to abate or remedy any unsafe act or condition which may arise in the course of Contractor's work under this contract.

Safety Audits: The County reserves the right to conduct safety audits at the job site and stop unsafe acts at any time. In addition, the County shall be notified should any OSHA inspection occur at a County job site.

107-08 PUBLIC CONVENIENCE AND SAFETY:
The Contractor shall control his operations and those of his subcontractors and all suppliers, to assure the least inconvenience to the traveling public. Under all circumstances, safety shall be the most important consideration.

Before the Contractor or any subcontractor begins work on the project they must read the Gila County Public Works Division Safety & Loss Control booklet and sign an acknowledgement form. All work shall be performed by Federal OSHA Standards.

The Contractor shall maintain the free and unobstructed movement of vehicular traffic with respect to his own operations and those of his subcontractor and all suppliers in accordance with the subsection titled MAINTENANCE OF TRAFFIC of Section 104-04 hereinbefore specified.

107-09 BARRICADES, WARNING SIGNS AND HAZARD MARKINGS:
The Contractor shall furnish, erect and maintain all barricades, warning signs, and markings for hazards necessary to protect the public and the work. When used during periods of darkness, such barricades, warning signs and hazard markings shall be suitably illuminated.

For vehicular and pedestrian traffic, the Contractor shall furnish, erect, and maintain barricades, warning signs, lights and other traffic control devices in reasonable conformity with the MUTCD.

The Contractor shall furnish and erect all barricades, warning signs and markings for hazards prior to commencing work which required such erection and shall maintain the barricades, warning signs, and markings for hazards until their dismantling is directed by the Owner's Engineer.

107-10 BLANK

107-11 PROTECTION AND RESTORATION OF PROPERTY AND LANDSCAPE: Per Section 107.11 of the ADOT Standard Specifications unless modified herein.

107-12 BLANK

Section 107-Legal Relations and Responsibility to Public continued…

107-13 RESPONSIBILITY FOR DAMAGE CLAIMS:

To the fullest extent permitted by law, Contractor shall defend, indemnify and hold harmless Gila County and their respective agents, representatives, officers, directors, officials, and employees from and against any and all demands, proceedings, suits, actions, claims, damages, or losses relating to, arising out of, resulting from or alleged to have resulted from the performance of the Work. Contractor's duty to defend, indemnify and hold harmless the indemnitee and their respective agents, representatives, officers, directors, officials and employees shall arise in connection with any and all demands, proceedings, suits, actions, claims, workers compensation claims, unemployment claims, damages, losses or expenses (including but not limited to attorney's fees, court costs and the cost of appellate proceedings) that are attributable to personal or bodily injury, sickness, disease, death, or injury to, impairment or destruction of property including the loss of use resulting thereon, caused by any act or omission of the Contractor, a subcontractor, anyone directly or indirectly employed by them or for whose acts they may be liable. The amount and type of insurance coverage requirements set forth in the Contract shall in no way be construed as limiting the scope of this indemnity.

107-14 CONTRACTOR'S INSURANCE:

Prior to the execution of the contract, the Contractor shall file with the Owner's Engineer a certificate or certificates of insurance executed by an insurance company doing business in the State of Arizona and acceptable to the Owner's Engineer. The certificate of insurance shall state that, with respect to the contract awarded the Contractor; the Contractor carries insurance in accordance with the requirements of this subsection.

On all policies Gila County shall be named as an additional insured.

INDEMNIFICATION CLAUSE:

The Contractor agrees to indemnify, defend, save and hold harmless the County of Gila, its officers, officials, agents, and employees, and any jurisdiction or agency issuing permits for any work included in the project, their officers, agents and employees, (hereinafter referred to as Indemnitee), from and against any and all suits and claims, (including court costs, attorney's fees, and costs of claim processing, investigation and litigation) (hereinafter referred to as "Claims") and cost of litigation, liabilities, actions, loss, damage, losses or expense, cost or claims of any character or any nature arising out of the work done in fulfillment of the terms of this Contract or on account of any act, claim or amount arising or recovered under workers' compensation law or arising out of the failure of the Contractor to conform to any statutes, ordinances, regulation, law or court decree. It is agreed that the Contractor will be responsible for primary loss investigation, defense and judgment costs where this contract of indemnity applies. In consideration of the award of this contract, the Contractor agrees to waive all rights of subrogation against the County, its officers, officials, agents and employees for losses arising from the work performed by the Contractor for the County.

Section 107-Legal Relations and Responsibility to Public continued…

INSURANCE REQUIREMENTS:

Contractor and subcontractors shall procure and maintain until all of their obligations have been discharged, including any warranty periods under this Contract are satisfied, insurance against claims for injury to persons or damage to property which may arise from or in connection with the performance of the work hereunder by the Contractor, his agents, representatives, employees or subcontractors.

The insurance requirements herein are minimum requirements for this Contract and in no way limit the indemnity covenants contained in this Contract.

The County in no way warrants that the minimum limits contained herein are sufficient to protect the Contractor from liabilities that might arise out of the performance of the work under this Contract by the Contractor, his agents, representatives, employees, or subcontractors. Contractor is free to purchase such additional insurance as may be determined necessary.

A. **MINIMUM SCOPE AND LIMITS OF INSURANCE -** Contractor shall provide coverage with limits of liability not less than those stated below:

1. **Commercial General Liability – Occurrence Form**
   Policy shall include bodily injury, property damage, broad form contractual liability and XCU coverage.
   - General Aggregate
     $2,000,000
   - Products – Completed Operations Aggregate
     $1,000,000
   - Personal and Advertising Injury
     $1,000,000
   - Each Occurrence
     $1,000,000

   a. The policy shall be endorsed to include the following additional insured language: **"The County of Gila shall be named as an additional insured with respect to liability arising out of the activities performed by, or on behalf of the Contractor".**

Section 107-Legal Relations and Responsibility to Public continued…

2. **Automobile Liability**
   Bodily injury and property damage for any owned, hired, and non-owned vehicles used in the performance of this Contract.

   Combined Single Limit (CSL) $1,000,000

   a. The policy shall be endorsed to include the following additional insured language: **"The County of Gila shall be named as an additional insured with respect to liability arising out of the activities performed by, or on behalf of the Contractor, including automobiles owned, leased, hired or borrowed by the Contractor".**

3. **Worker's Compensation and Employers' Liability**

Workers' Compensation	Statutory
Employers' Liability	
Each Accident	$100,000
Disease – Each Employee	$100,000
Disease – Policy Limit	$500,000

   a. Policy shall contain a **waiver of subrogation** against the County of Gila.

B. **ADDITIONAL INSURANCE REQUIREMENTS:** The policies shall include, or be endorsed to include, the following provisions:

1. On insurance policies where the County of Gila is named as an additional insured, the County of Gila shall be an additional insured to the full limits of liability purchased by the Contractor even if those limits of liability are in excess of those required by this Contract.
2. The Contractor's insurance coverage shall be primary insurance and non-contributory with respect to all other available sources.
3. Coverage provided by the Contractor shall not be limited to the liability assumed under the indemnification provisions of this Contract.

C. **NOTICE OF CANCELLATION:** Each insurance policy required by the insurance provisions of this Contract shall provide the required coverage and shall not be suspended, voided, canceled, reduced in coverage or endorsed to lower limits except after thirty (30) days prior written notice has been given to the County. Such notice shall be sent directly to **(County of Gila, Finance Department, Attention Jeannie Sgroi, 1400 E. Ash Street, Globe, AZ 85501)** and shall be sent by certified mail, return receipt requested.

D. **ACCEPTABILITY OF INSURERS:** Insurance is to be placed with insurers duly licensed in the State of Arizona or which hold approved non-admitted status on the Arizona Department of Insurance List of Qualified Unauthorized Insurers and with an "A.M. Best" rating of not less than B+ VI. The County in no way warrants that the above-required minimum insurer rating is sufficient to protect the Lessee from potential insurer insolvency.

Section 107-Legal Relations and Responsibility to Public continued…

E. **VERIFICATION OF COVERAGE:** Contractor shall furnish the County with certificates of insurance (ACORD form or equivalent approved by the County) as required by this Contract. The certificates for each insurance policy are to be signed by a person authorized by that insurer to bind coverage on its behalf.

All certificates and endorsements are to be received and approved by the County before work commences. Each insurance policy required by this Contract must be in effect at or prior to commencement of work under this Contract and remain in effect for the duration of the project. Failure to maintain the insurance policies as required by this Contract or to provide evidence of renewal is a material breach of contract.

All certificates required by this Contract shall be sent directly to **(County Department Representative's Name and Address)**. The County project/contract number and project description shall be noted on the certificate of insurance. The County reserves the right to require complete, certified copies of all insurance policies required by this Contract at any time**.**

F. **SUBCONTRACTORS:** Contractors' certificate(s) shall include all subcontractors as additional insureds under its policies **or** Contractor shall furnish to the County separate certificates and endorsements for each subcontractor. All coverages for subcontractors shall be subject to the minimum requirements identified above.

G. **APPROVAL:** Any modification or variation from the insurance requirements in this Contract shall be made by the County Attorney, whose decision shall be final. Such action will not require a formal Contract amendment, but may be made by administrative action.

107-GC1 THIRD PARTY BENEFICIARY CLAUSE:

It is specifically agreed between the parties executing the contract that it is not intended by any of the provisions of any part of the contract to create to the public or any member thereof a third party beneficiary or to authorize anyone not a party to the contract to maintain a suit for personal injuries or property damage pursuant to the terms or provisions of the contract.

Section 107-Legal Relations and Responsibility to Public continued…

107-15 CONTRACTOR'S RESPONSIBILITY FOR UTILITY PROPERTY AND SERVICES:

(A) General:

The contractor's attention is directed to the requirements of Arizona Revised Statutes Section 40-360.21 through 40-360.29 requiring all parties excavating in public streets, alleys or utility easements to first secure the location of all underground facilities in the vicinity of the excavation.

The contractor shall contact the owners of the various utilities prior to the start of construction and shall obtain from them any information pertaining to existing utilities that will either supplement information shown on the project plans or will correct any such information that may be incorrect. The contractor shall furnish the Engineer with evidence that the contractor has contacted the utility companies. Such evidence shall be submitted at the preconstruction conference, and shall include a copy of the information received from each utility as a result of such contacts.

If the contractor learns from either the owner of the utility or from any other source of the existence and location of properties of railway, telegraph, telephone, fiber optics cable, water, sewer, septic tanks or systems, electric, gas and cable television companies either omitted from or shown incorrectly on the project plans, the contractor shall immediately notify the Engineer and shall not disturb the utilities. Relocation or adjustment of such utilities, if deemed necessary, will be either performed by others or shall be performed by the contractor in accordance with the provisions of Subsection 104-02(C).

The contractor shall cooperate with the owners of any underground or overhead utility lines in their removal and rearrangement operations in order that these operations may progress in a reasonable manner, that duplication of rearrangement work may be reduced to a minimum and that services rendered by these parties will not be unnecessarily interrupted.

Temporary or permanent relocation or adjustment of any utility line or service connection desired by the contractor for its convenience shall be its responsibility. The contractor shall obtain the approval of both the Engineer and the utility company and upon approval shall make all necessary arrangements with the utility company and shall bear all costs in connection with such relocation or adjustment. The contractor shall also submit a Sewer Discharge Prevention Plan, as specified in Subsection 107-15(C)(1), describing each anticipated relocation or adjustment involving existing sanitary sewer lines. No work on a particular facility shall begin until all approvals for that facility have been received.

Section 107-Legal Relations and Responsibility to Public continued…

(B) Contractor Qualifications for Water and Sewer Lines:
Breakage of active sanitary sewer lines may result in the potential spread of disease, contamination of the site and any adjacent bodies of water, and other hazards to the public. Substantial cleanup costs may be associated with such breakage, as well as possible major civil or criminal penalties. Therefore, the Engineer will closely consider the qualifications of any personnel proposed by the contractor to oversee or perform work involving active sanitary sewer lines. The contractor shall not assume that the personnel assigned to perform such work will be acceptable to the Department merely because they meet the experience requirements listed herein.

The contractor, or the subcontracting firm assigned to perform the water and sewer work, shall have a minimum of five years of experience in the installation and construction of underground large diameter (18-inch or above) water and sewer improvements.

In addition, the key personnel assigned by the contractor to perform any work on water or sewer lines, whether from the prime contractor or a subcontracting firm, shall also have at least five years of experience in the installation and construction of underground large diameter (18-inch or above) water and sewer improvements. A minimum of two such people shall be designated by the contractor. The designated personnel may have the title of foreman or superintendent; however, at least one of these people shall be present at all times at the location of any work being performed at or near an active sanitary sewer line.

For both the firm and the key personnel, the experience shall include working with and around water and sewer utility lines that are in service. The contractor shall submit the following documentation to the Engineer for review and approval:

(1) A list indicating that the designated key project personnel have at least five years of applicable experience, as specified above. The list shall be accompanied with resumes for each of the key people. The resumes shall include the following information, and demonstrate compliance with the specified requirements:

(a) Detailed relevant experience for a minimum of two projects, including project description, date of work, actual work performed by the individual, and references (a minimum of one for each project).

(b) Level of applicable formal training.

(c) Number of years of relevant experience in performing like construction.

Section 107-Legal Relations and Responsibility to Public continued…

(2) A list of water and sewer construction projects completed by the firm performing the water or sewer work, as specified above, indicating a minimum of five years of applicable experience. Include the dates of work, type of work, description of the project, amount of work performed by the contractor/subcontractor, and the name and phone number of a contact with the owning company or agency for which the work was completed.

(3) List of equipment that will be used for this project. The list shall include, as a minimum, equipment type, date of manufacture, and if contractor-owned or rented.

(4) A list of all violations and citations in the past five years of applicable water and wastewater laws and statutes for both the prime contractor and the subcontractor responsible for the utility work.

The contractor shall submit this documentation to the Engineer for approval at least 21 calendar days prior to any anticipated work involving active sanitary sewer lines, whether new or existing.

(C) Protection of Existing Utility Lines:
At points where the contractor's operations are adjacent to right-of-way properties or easements for railway, telegraph, telephone, water, sewer, electric, gas and cable television companies, hereinafter referred to as utilities, or are adjacent to other facilities and property, damage to which might result in considerable expense, loss, inconvenience, injury or death, work shall not be commenced until all arrangements necessary for the protection thereof have been made.

The exact locations and depths of all utilities that are underground or the location of those on or near the surface of the ground which are not readily visible shall be determined. Such locations shall be marked in such a manner so that all workmen or equipment operators will be thoroughly apprised of their existence and location. It will be the contractor's responsibility to see that every effort possible has been made to acquaint those actually involved in working near utilities not only with the type, size, location and depth, but with the consequences that might follow any disturbance. No trenching or similar operation shall be commenced until the Engineer is satisfied that every possible effort has been taken by the contractor to protect utilities.

The contractor shall coordinate with others working near new or existing sewer lines or other utilities on the procedures to be followed to prevent damaging of these utilities.

Section 107-Legal Relations and Responsibility to Public continued…

(1) Sewage Discharge Prevention Plan (SDPP):
For any work which may impact active sanitary sewer pipes, whether new or existing, the contractor shall prepare a Sewage Discharge Prevention Plan (SDPP) which shall describe the contractor's procedures and work plan for such lines. The Sewage Discharge Prevention Plan shall also describe the precautions that the contractor shall take to prevent unplanned breakage or spills, and the procedure which the contractor shall follow if breakage or a spill occurs.

The contractor's method of work described in the SDPP shall ensure that any work done in or near any active sewer line is performed in a safe and controlled manner resulting in no accidental discharges. As a minimum, the contractor's equipment and procedures shall be appropriate for the intended work, and shall conform to standard industry practices.

The SDPP shall include information, as specified below, for all portions of the project which involve the following work activities, and for any other element of work which may involve contact with an active sanitary sewer line:

- Interrupt, divert, relocate, plug, or abandon a sewer line or service connection, or
- Brace, or tie into a sewer line or service connection.

Construction activities in the vicinity of active sanitary sewer lines or service connections shall also be included in the SDPP if any of the following conditions exist:

(1) Any work crossing beneath the pipe, at any angle, regardless of vertical separation.

(2) Any work crossing over the pipe, at any angle, within two feet of the top of pipe.

(3) Work located parallel to the pipe within the following areas:

(a) For the area from the bottom of the pipe to two feet above the top of the pipe, any work within two feet horizontally of the pipe wall.

(b) For the area below the bottom of the pipe, any work located below an imaginary line beginning at the pipe spring line and progressing downward at a slope of 1.5 feet vertically to 1.0 feet horizontally.

The contractor’s Sewage Discharge Prevention Plan shall address each of the items tabulated below, as applicable, for every location where construction activity will involve an active sanitary sewer line.

Section 107-Legal Relations and Responsibility to Public continued…

(2) Required Elements of the Sewage Discharge Prevention Plan:
The following elements shall be addressed in the SDPP:

(a) Describe the proposed work in general, including the reasons for the work, scope, objectives, locations, dates, and estimated times the work will be conducted. Include project plan sheets detailing the proposed work, and indicating the peak flowrates of active sewer lines, determined as specified.

(b) For all existing sanitary sewer pipes, determine whether the lines are active or abandoned, and the peak flowrates of lines in service, as provided by the owner of the utility.

(c) List the key personnel (crew foreman, superintendent, and manager) and field office that are proposed to perform the work (include phone numbers).

(d) Describe the work in step-by-step detail for each location, including excavation plans and how both the new and existing structures and utilities will be identified and protected.

(e) Provide a detailed listing of any hardware, fittings, pipe plugs, flex couplings, tools, and materials needed to accomplish the work, and note the status of these items (on-hand, to-be-fabricated, on-order with expected delivery date, etc.). Include any manufacturer's specifications or recommendations, especially for any pipe plugs, sewer line fittings, and patching materials.

(f) List all major equipment to be used to perform the work. Include in this item any pumps that will be used to perform the work and the rated capacity of the pumps at the anticipated suction head.

(g) List all equipment to be used in the event of an unplanned release and specify how the equipment will be used. The locations of standby pumps shall be specified in this item. The plan shall indicate that all standby equipment to be used in the event of an unplanned discharge can be delivered to the site and put into service within two hours of identification of any unplanned flow.

(h) List the safety equipment to be used, and describe any unique safety procedures. Cite the applicable OSHA standards covering the work.

(i) Describe any contingency plans the contractor will implement in the event of unplanned releases and/or damage to existing facilities. List all personnel and subcontractors that will be responsible for responding to unplanned releases or damaged lines. Provide qualifications for all such personnel and subcontractors, including education, formal training, and relevant experience.

Section 107-Legal Relations and Responsibility to Public continued…

(j) Describe how the public will be protected during the work, and include or cite any applicable traffic control plans.

(k) Describe the quality control procedures that will be used in the field.

(l) Discuss how temporary plugs or flow control devices will be secured, monitored, and removed.

The SDPP shall be in written form, and shall include any diagrams or sketches necessary for clarity. When possible, diagrams and sketches should be shown using the applicable project plan sheets.

The contractor shall modify the SDPP as necessary throughout the project to include any new or revised information relevant to the items listed above. The contractor shall resubmit the revised SDPP to the Engineer for approval in each case.

(3) Sewage Discharge Prevention Plan Approval:
The SDPP shall be submitted to the Engineer at least 21 calendar days before any work involving an active sewer line is to be done. The Engineer will review the plan, solicit comments from the owner/operator of the sewer line, and return the plan to the contractor within 14 calendar days from original submittal.

No work involving active sanitary sewer lines shall be done until a final SDPP meeting all the requirements specified in Subsection 107-15(C)(2) has been approved by the Engineer.

Approval of the contractor's Sewage Discharge Prevention Plans, personnel, or construction methods and operation shall not relieve the contractor from its responsibility to safely perform the work included in this contract, nor from its liability for damage resulting, either directly or indirectly, from its work performed under this contract.

(D) Service Connections:

(1) General:
In the event of interruption to water, sewer, or utility services as a result of accidental breakage or as a result of lines being exposed or unsupported, the contractor shall promptly notify the proper authority and shall cooperate with the said authority in the restoration of service. When service is interrupted, repair work shall be continuous until the service is restored. No work shall be undertaken around fire hydrants until provisions for continued service have been approved by the local fire authority.

Section 107-Legal Relations and Responsibility to Public continued…

(2) Unidentified Water and Sewer Connections:

The contractor shall protect unidentified, undamaged water or sewer service connections encountered during excavation. The contractor shall immediately notify the Engineer when an unidentified service connection is encountered.

The contractor shall immediately repair unidentified water or sewer service connections that are damaged during excavation. Any damaged service connections shall be reported to the Engineer, including all remedial actions taken.

(E) Repairing Damaged Lines:

When the operations of the contractor result in damage to any utility line or service connection, the location of which has been brought to the contractor's attention, the contractor shall assume full responsibility for such damage.

Should an unplanned breakage occur in an active sewer line as a result of the contractor's operations, the contractor shall immediately notify the Engineer, and begin repairs to halt any flows and restore normal service, in accordance with the procedures described in the approved Sewage Discharge Prevention Plan. The contractor shall also immediately notify the affected utility company and the appropriate regulatory agencies. The contractor shall be responsible for repairing the damaged pipe, restoring any interruptions in service, and cleaning up the affected areas within 24 hours of the beginning of the spill. Sewage discharge damage assessments, as specified in Subsection 107-15(F), will be charged to the contractor for any unplanned breakage which results in a discharge.

The contractor shall be responsible to repair any breakage, in accordance with requirements of the broken line's owner/operator, and clean up the site per applicable codes and regulations of the Environmental Protection Agency, OSHA, Arizona Department of Environmental Quality (ADEQ), and all other agencies' specifications, at no additional cost to the Department.

(F) Sewage Discharge Damage Assessments:

The Department will assess liquidated damages in accordance with the Table 1 below for each 24-hour period, or portion thereof, for each unplanned breakage that occurs in an active sanitary sewer line as a result of the contractor's operation. The rate of liquidated damages assessed is based on the type and quantity of effluent discharged as determined by the Engineer.

These liquidated damages do not relieve the contractor from any of its responsibilities under the contract, including any liquidated damages that may be assessed under Subsection 108.09 for late completion of the project.

Section 107-Legal Relations and Responsibility to Public continued…

Liquidated damages assessed by the Department will be independent of any penalties imposed by others.

The contractor acknowledges that Regulatory agencies may assess or impose civil or criminal penalties on the contractor resulting from sewer discharges.

The Department will not be responsible for any civil or criminal penalties, fines, damages, or other charges imposed on the contractor by any regulatory agency or court for sewage discharges that are a result, directly or indirectly, of the contractor's work performed under this contract.

Table 1		
Liquidated Damages (each 24 hour period, or portion thereof)		
Volume of Discharge	Raw Sewage or Industrial Wastewater	Treated Effluent
Less than 10,000 gallons	$5,000.00	$1,000.00
10,000-99,999 gallons	$10,000.00	$2,000.00
100,000-1 million gallons	$25,000.00	$3,000.00
Greater than 1 million gallons	$40,000.00	$5,000.00

Liquidated damages shall be assessed for each 24 hour period, or portion thereof, until the contractor has completed all of the following tasks:

(A) Stopped the discharge.

(B) Repaired the damaged pipe.

(C) Restored normal service.

(D) Fully cleaned and disinfected the site to the satisfaction of the Engineer.

Section 107-Legal Relations and Responsibility to Public continued…

REDUCTION OF LIQUIDATED DAMAGES: Upon completion of tasks A, B, and C above, and prior to completion of Task D, the liquidated damages assessed for the current 24-hour period shall be at the rate shown in Table 1. However, for each subsequent 24-hour period, the assessment will be one half of the rate shown in Table 1.

Damages will continue at the reduced rate until the site has been fully cleaned and disinfected to the satisfaction of the Engineer.

As an example, the amounts assessed each 24-hour period for an unplanned discharge of 20,000 gallons of raw sewage, in which the contractor completes tasks A, B, and C within the second 24-hour period but does not complete full cleanup until the third 24-hour period, will be as follows:

First 24-hour period: $10,000.00

Second 24-hour period: $10,000.00

Third 24-hour period: $5,000.00

For this example, the total liquidated damage assessment will be $25,000.00 ($10,000 + $10,000 + $5,000).

107-16 PERSONAL LIABILITY OF PUBLIC OFFICIALS:

In carrying out any of the contractor provisions or in exercising any power or authority granted to him by this contract, there shall be no liability upon the Owner's Engineer, his authorized representatives, or any official of the Owner either personally or as an official of the Owner. It is understood that in such matters they act solely as agents and representatives of the Owner.

107-17 NO WAIVER OF LEGAL RIGHTS:

Upon completion of the work, the Owner will expeditiously make final inspection and notify the Contractor of final acceptance. Such final acceptance, however, shall not preclude or stop the Owner from correcting any measurement, estimate, or certificate made before or after completion of the work, nor shall the Owner be precluded or stopped from recovering from the Contractor or his surety, or both, such overpayment as may be sustained, or by failure on the part of the Contractor to fulfill his obligations under the contract. A waiver on the part of the Owner of any breach of any part of the contract shall not be held to be a waiver of any other or subsequent breach.

The Contractor, without prejudice to the terms of the contract, shall be liable to the Owner for latent defects, fraud, or such gross mistakes as may amount to fraud, or as regards the Owner's rights under any warranty or guaranty.

SECTION 108 PROSECUTION AND PROGRESS:

108-01 SUBLETTING OF CONTRACT:

The Contractor shall not sublet, sell, transfer, assign or otherwise dispose of the contract or contracts or any portion thereof or of his right, title or interest therein without written consent of the Owner's Engineer. In case such consent is given, the Contractor will be permitted to sublet a portion thereof, but shall perform with his own organization work amounting to not less than 50 percent of the total contract amount, except that any items designated in the contract as "Specialty Items" may be performed by subcontract and the cost of any such specialty items so performed by subcontract may be deducted from the total cost before computing the amount of work required to be performed by the Contractor with his own organization. No subcontracts or transfer of contract shall release the Contractor of his liability under the contract and bond.

"His own organization" shall be construed to include only workmen employed and paid directly by the prime contractor and equipment owned or rented by him, with or without operators.

"Specialty Items" shall be construed to be limited to work that requires highly specialized knowledge, craftsmanship or equipment not ordinarily available in contracting organizations qualified to bid on the contract as a whole and in general are to be limited to minor components of the overall contract.

The contract amount upon which the 50 percent requirement is computed includes the cost of materials and manufactured products which are to be purchased or produced by the Contractor under the contract provisions.

Any items that have been selected as "Specialty Items" for the contract will be listed as such in the special provisions, bidding schedule, or elsewhere in the contract documents.

The Owner will not recognize any subcontractor on the work. The Contractor shall at all times when work is in progress be represented either in person, by a qualified superintendent, or by other designated, qualified representative who is duly authorized to receive and execute the orders of the Owner's Engineer.

Should the Contractor elect to assign his contract, said assignment shall be concurred in by the surety, shall be presented for the consideration and approval of the Owner, and shall be consummated only on the written approval of the Owner. In case of approval, the Contractor shall file copies of all subcontracts with the Owner's Engineer

Section 108-Prosecution and Progress continued…

108-02 NOTICE TO PROCEED:
The notice to proceed shall state the date on which it is expected the Contractor will begin the construction and from which date contract time will be charged. The Contractor shall begin the work to be performed under the contract within ten (10) calendar days of the date set by the Owner's Engineer in the written notice to proceed, but in any event, the Contractor shall notify the Owner's Engineer at least two (2) work days in advance of the time actual construction operations will begin.

108-03 BLANK

108-04 PROSECUTION AND PROGRESS:
The Contractor shall submit his progress schedule for the Owner's Engineer's approval within 10 days after the effective date of the notice to proceed. The Contractor's progress schedule, when approved by the Owner's Engineer, may be used to establish major construction operations and to check on the progress of the work. The Contractor shall provide sufficient materials, equipment, and labor to guarantee the completion of the project in accordance with the plans and specifications within the time set forth in the proposal.

If the Contractor falls significantly behind the submitted schedule, the Contractor shall, upon the Owner's Engineer's request, submit a revised schedule for completion of the work within the contract time and modify his operations to provide such additional materials, equipment, and labor necessary to meet the revised schedule. Should the prosecution of the work be discontinued for any reason, the Contractor shall notify the Owner's Engineer at least twenty-four (24) hours in advance of resuming operations.

The Contractor shall not commence any actual construction prior to the date on which the notice to proceed is issued by the Owner.

108-05 BLANK

108-06 CHARACTER OF WORKERS: Per Section 108.06 of the ADOT Standard Specifications unless modified herein.

108-07 METHODS AND EQUIPMENT: Per Section 108.07 of the ADOT Standard Specifications unless modified herein.

108-GC1 TEMPORARY SUSPENSION OF THE WORK:
The Owner's Engineer shall have the authority to suspend the work wholly, or in part, for such period or periods as he may deem necessary, due to unsuitable weather, or such other conditions as are considered unfavorable for the prosecution of the work, or for such time as is necessary due to the failure on the part of the Contractor to carry out orders given or perform any or all provisions of the contract.

Section 108-Prosecution and Progress continued…

In the event that the Contractor is ordered by the Owner's Engineer, in writing, to suspend work for some unforeseen cause not otherwise provided for in the contract and over which the Contractor has no control, the Contractor may be reimbursed for actual money expended on the work during the period of shutdown. No allowance will be made for anticipated profits. The period of shutdown shall be computed from the effective date of the Owner's Engineer's order to suspend work to the effective date of the Owner's Engineer's order to resume the work. Claims for such compensation shall be filed with the Owner's Engineer within the time period stated in the Owner's Engineer's order to resume work. The Contractor shall submit with his claim information substantiating the amount shown on the claim. The Owner's Engineer will forward the Contractor's claim to the Owner for consideration in accordance with local laws or ordinances. No provision of this article shall be construed as entitling the Contractor to compensation for delays due to inclement weather, for suspensions made at the request of the Contractor, or for any other delay provided for in the contract, plans or specifications.

If it should become necessary to suspend work for an indefinite period, the Contractor shall store all materials in such manner that they will not become an obstruction nor become damaged in any way. He shall take every precaution to prevent damage or deterioration of the work performed and provide for normal drainage of the work. The Contractor shall erect temporary structures where necessary to provide for the continuous flow of traffic.

108-08 DETERMINATION AND EXTENSION OF CONTRACT TIME:
The number of calendar or working days allowed for completion of the work shall be stated in the proposal and contract and shall be known as the CONTRACT TIME.

Should the contract time require extension for reasons beyond the Contractor's control, it shall be adjusted as follows:

(a) CONTRACT TIME based on WORKING DAYS shall be calculated weekly by the Owner's Engineer. The Owner's Engineer will furnish the Contractor a copy of his weekly statement of the number of working days charged against the contract time during the week and the number of working days currently specified for completion of the contract (the original contract time plus the number of working days, if any, that have been included in approved CHANGE ORDERS or SUPPLEMENTAL AGREEMENTS covering EXTRA WORK (104-02(C)).

Section 108-Prosecution and Progress continued…

The Owner's Engineer shall base his weekly statement of contract time charged on the following considerations:

(1) No time shall be charged for days on which the Contractor is unable to proceed with the principal item of work under construction at the time for at least 6 hours with the normal work force employed on such principal item. Should the normal work force be on a double-shift, 12 hours shall be used. Should the normal work force be on a triple-shift, 18 hours shall apply. Conditions beyond the Contractor's control such as strikes, lockouts, unusual delays in transportation, temporary suspension of the principal items of work under construction or temporary suspension of the entire work which have been ordered by the Owner's Engineer for reasons not the fault of the Contractor, shall not be charged against the contract time.

(2) The Owner's Engineer will not make charges against the contract time prior to the effective date of the notice to proceed.

(3) The Owner's Engineer will begin charges against the contract time on the first working day after the effective date of the notice to proceed.

(4) The Owner's Engineer will not make charges against the contract time after the date of final acceptance as defined in the subsection titled FINAL ACCEPTANCE of Section 105-20(B).

(5) The Contractor will be allowed one week in which to file a written protest setting forth his objections to the Owner's Engineer's weekly statement. If no objection is filed within such specified time, the weekly statement shall be considered as acceptable to the Contractor.

The contract time (stated in the proposal) is based on the originally estimated quantities as described in the subsection titled INTERPRETATION OF ESTIMATED PROPOSAL QUANTITIES of Section 102-06.

Should the satisfactory completion of the contract require performance of work in greater quantities than those estimated in the proposal, the contract time shall be increased in the same proportion as the cost of the actually completed quantities bears to the cost of the originally estimated quantities in the proposal. Such increase in contract time shall not consider either the cost of work or the extension of contract time that has been covered by change order or supplemental agreement and shall be made at the time of final payment.

(b) CONTRACT TIME based on CALENDAR DAYS shall consist of the number of calendar days stated in the contract counting from the effective date of the notice to proceed and including all Saturdays, Sundays, holidays, and non-work days. All calendar days elapsing between the effective dates of the Owner's Engineer's orders to suspend and resume all work, due to causes not the fault of the Contractor, shall be excluded.

Section 108-Prosecution and Progress continued…

At the time of final payment, the contract time shall be increased in the same proportion as the final cost bears to the estimated cost in the proposal. Such increase in the contract time shall not consider either the cost of work or the extension of contract time that has been covered by a change order or supplemental agreement. Charges against the contract time will cease as of the date of final acceptance.

(c) When the contract time is a specified completion date, it shall be the date on which all contract work shall be substantially completed.

If the Contractor finds it impossible for reasons beyond his control to complete the work within the contract time as specified, or as extended in accordance with the provisions of this subsection, he may, at any time prior to the expiration of the contract time as extended, make a written request to the Owner's Engineer for an extension of time setting forth the reasons which he believes will justify the granting of his request. The Contractor's plea that insufficient time was specified is not a valid reason for extension of time. If the Owner's Engineer finds that the work was delayed because of conditions beyond the control and without the fault of the Contractor, he may extend the time for completion in such amount as the conditions justify. The extended time for completion shall then be in full force and effect, the same as though it were the original time for completion.

108-09 FAILURE TO COMPLETE ON TIME:

For each calendar day or working day, as specified in the contract, that any work remains uncompleted after the contract time (including all extensions and adjustments as provided in the subsection titled DETERMINATION AND EXTENSION OF CONTRACT TIME of Section 108-08 the sum specified in the contract and proposal as liquidated damages will be deducted from any money due or to become due the Contractor or his surety. Such deducted sums shall not be deducted as a penalty but shall be considered as liquidation of a reasonable portion of damages that will be incurred by the Owner should the Contractor fail to complete the work in the time provided in his contract.

Permitting the Contractor to continue and finish the work or any part of it after the time fixed for its completion, or after the date to which the time for completion may have been extended, will in no way operate as a waiver on the part of the Owner of any of its rights under the contract.

Section 108-Prosecution and Progress continued…

108-10 DEFAULT AND TERMINATION OF CONTRACT:
The Contractor shall be considered in default of his contract and such default will be considered as cause for the Owner to terminate the contract for any of the following reasons if the Contractor:

(a) Fails to begin the work under the contract within the time specified in the "Notice to Proceed (108-02)"; or
(b) Fails to perform the work or fails to provide sufficient workers, equipment or materials to assure completion of work in accordance with the terms of the contract; or
(c) Performs the work unsuitably or neglects or refuses to remove materials or to perform anew such work as may be rejected as unacceptable and unsuitable; or
(d) Discontinues the prosecution of the work; or
(e) Fails to resume work which has been discontinued within a reasonable time after notice to do so; or
(f) Becomes insolvent or is declared bankrupt, or commits any act of bankruptcy or insolvency; or
(g) Allows any final judgment to stand against him unsatisfied for a period of 10 days; or
(h) Makes an assignment for the benefit of creditors; or
(i) For any other cause whatsoever, fails to carry on the work in an acceptable manner.

Should the Owner's Engineer consider the Contractor in default of the contract for any reason hereinbefore, he shall immediately give written notice to the Contractor and the Contractor's surety as to the reasons for considering the Contractor in default and the Owner's intentions to terminate the contract.

If the Contractor or surety, within a period of 10 calendar days after such notice, does not proceed in accordance therewith, then the Owner will, upon written notification from the Owner's Engineer of the facts of such delay, neglect, or default and the Contractor's failure to comply with such notice, have full power and authority without violating the contract, to take the prosecution of the work out of the hands of the Contractor. The Owner may appropriate or use any or all materials and equipment that have been mobilized for use in the work and are acceptable and may enter into an agreement for the completion of said contract according to the terms and provisions thereof, or use such other methods as in the opinion of the Owner's Engineer will be required for the completion of said contract in an acceptable manner.

All costs and charges incurred by the Owner, together with the cost of completing the work under contract, will be deducted from any monies due or which may become due the Contractor. If such expense exceeds the sum which would have been payable under the contract, then the Contractor and the surety shall be liable and shall pay to the Owner the amount of such excess.

Section 108-Prosecution and Progress continued…

108-GC2 TERMINATION OF CONTRACT FOR NATIONAL EMERGENCIES:
The Owner shall terminate the contract or portion thereof by written notice when the Contractor is prevented from proceeding with the construction contract as a direct result of an Executive Order of the President with respect to the prosecution of war or in the interest of national defense.

When the contract, or any portion thereof, is terminated before completion of all items of work in the contract, payment will be made for the actual number of units or items of work completed at the contract price or as mutually agreed for items of work partially completed or not started. No claims or loss of anticipated profits shall be considered.

Reimbursement for organization of the work, and other overhead expenses, (when not otherwise included in the contract) and moving equipment and materials to and from the job will be considered, the intent being that an equitable settlement will be made with the Contractor.

Acceptable materials, obtained or ordered by the Contractor for the work and that are not incorporated in the work shall, at the option of the Contractor, be purchased from the Contractor at actual cost as shown by receipted bills and actual cost records at such points of delivery as may be designated by the Owner's Engineer.

Termination of the contract or a portion thereof shall neither relieve the Contractor of his responsibilities for the completed work nor shall it relieve his surety of its obligation for and concerning any just claim arising out of the work performed.

SECTION 109 MEASUREMENT AND PAYMENT:
Measurement will be in place for the completed work, with no allowance for waste, and as may be more particularly described in the description of the various items set forth in the Standard Specifications and as shown on the plans.

No additional payments will be made for work related to any item unless specifically noted and called for in the Proposal. Payment will be made at the unit price or lump sum price bid in the Proposal.

Section 109-Measurement and Payment continued…

In addition to the requirements set forth in the ADOT Standard Specifications, no measurement or direct payment will be made for the following work. The cost for such work shall be considered as included in the price of other contract items.

A. Removal and salvage items as called for on the plans, in the Standard Specifications, or these Special Provisions.
B. Removal, salvage and/or re-installation of existing fence lines.
C. Sampling, testing, certification, and other quality control actions.
D. Disposal of surplus, waste or non-salvageable materials.
E. Grading of drainage ditches and drainage excavation not called out on the plans.
F. Preparation and submittal of operation, traffic control, and storm water pollution prevention plans, whether specified herein or required by the other agencies.
G. Obtaining and maintaining any required environmental and/or other permits and licenses.

The quantities set forth in the Proposal are used for the purpose of determining the basis of the award of the Contract, and may be increased or decreased 10% or less by the Owner to conform to the requirements of the work as set forth on the plans, and the Contractor shall agree to perform the work on the basis of the prices bid for the items contained in the Proposal regardless of whether or not the items or units are decreased or increased.

The Owner's Engineer shall have the right to order omitted from the Contract any minor item found unnecessary to the work without violating the Contract or Performance Bond, and without any compensation to the Contractor.

To ensure the Contractor's satisfactory performance of the Contract, progress payments shall be subject to retainage pursuant to A.R.S. §34-221 in the amount of 10% of the approved estimate of the Work performed in the preceding calendar month. When the Work is 50% complete, the retainage shall be reduced to 5% so long as the Contractor is making satisfactory progress. If the Owner determines in writing that the Contractor is not making satisfactory progress at any time, the 10% retainage may be reinstated. In lieu of retainage, the Contractor may post substitute security meeting the requirements of A.R.S. §34-221.

109-01 MEASUREMENT OF QUANTITIES: Per Section 109.01 of the ADOT Standard Specifications unless modified herein.

Section 109-Measurement and Payment continued…

109-02 SCOPE OF PAYMENT:
The Contractor shall receive and accept compensation provided for in the contract as full payment for furnishing all materials, for performing all work under the contract in a complete and acceptable manner, and for all risk, loss, damage, or expense of whatever character arising out of the nature of the work or the prosecution thereof, subject to the provisions of the subsection titled NO WAIVER OF LEGAL RIGHTS of Section 107-17.

When the "basis of payment" subsection of a specification requires that the contract price (price bid) include compensation for certain work or material essential to the item, this same work or material will not also be measured for payment under any other contract item which may appear elsewhere in the contract, plans or specifications.

Periodic progress payments shall be in accordance with A.R.S. §34-221.

109-03 COMPENSATION FOR ALTERED QUANTITIES:
When the accepted quantities of work vary from the quantities in the proposal, the Contractor shall accept as payment in full, so far as contract items are concerned, payment at the original contract price for the accepted quantities of work actually completed and accepted. No allowance, except as provided for in the subsection titled ALTERATION OF WORK AND QUANTITIES of Section 104-02(A) will be made for any increased expense, loss of expected reimbursement, or loss of anticipated profits suffered or claimed by the Contractor which results directly from such alterations or indirectly from his unbalanced allocation of overhead and profit among the contract items, or from any other cause.

109-04 PAYMENT FOR EXTRA AND FORCE ACCOUNT WORK:
Extra work, performed in accordance with the subsection titled EXTRA WORK of Section 104-02(C), will be paid for at the contract prices or agreed prices specified in the change order or supplemental agreement authorizing the extra work requiring that it be done by force account, such force account shall be measured and paid for as follows:

(a) Labor. For all labor (skilled and unskilled) and foremen in direct charge of a specific force account item, the Contractor shall receive the rate of wage (or scale) for every hour that such labor or foreman is actually engaged in the specified force account work. Such wage (or scale) shall be agreed upon in writing before beginning the work.

The Contractor shall receive the actual costs paid to, or in behalf of, workers by reason of subsistence and travel allowances, health and welfare benefits, pension fund benefits or other benefits, when such amounts are required by collective bargaining agreement or other employment contract generally applicable to the classes of labor employed on the work. An amount equal to 15 percent of the sum of the above items will also be paid the Contractor.

Section 109-Measurement and Payment continued…

(b) Insurance and Taxes. For property damage, liability and workmen's compensation insurance premiums, unemployment insurance contributions, and social security taxes on the force account work the Contractor shall receive the actual cost, to which cost (sum) 5 percent will be added. The Contractor shall furnish satisfactory evidence of the rate or rates paid for such insurance and taxes.

(c) Materials. For materials accepted by the Owner's Engineer and used, the Contractor shall receive the actual cost of such materials delivered on the work, including transportation charges paid by him (exclusive of machinery rentals as hereinafter set forth), to which cost (sum) 15 percent will be added.

(d) Equipment. For any machinery or special equipment (other than small tools) including fuel and lubricants, plus transportation costs, the use of which has been authorized by the Owner's Engineer, the Contractor shall receive the rental rates in the current "Blue Book for Construction Equipment".

(e) Miscellaneous. No additional allowance will be made for general superintendence, the use of small tools, or other costs for which no specific allowance is herein provided.

(f) Comparison of Records. The Contractor and the Owner's Engineer shall compare records of the cost of force account work at the end of each day. Agreement shall be indicated by signature of the Contractor and Owner's Engineer or their duly authorized representatives.

(g) Statements. No payment will be made for work performed on a force account basis until the Contractor has furnished the Owner's Engineer with duplicate itemized statements of the cost of such force account work detailed as follows:

(1) Name, classification, date, daily hours, total hours, rate and extension for each laborer and foreman.
(2) Designation, dates, daily hours, total hours, rental rate and extension for each unit of machinery and equipment.
(3) Quantities of material, prices, and extensions.
(4) Transportation of materials.
(5) Cost of property damage, liability and workmen's compensation insurance premiums, unemployment insurance contribution and social security tax.

Section 109-Measurement and Payment continued…

Statements shall be accompanied and supported by receipted invoice for all materials used and transportation charges. However, if materials used on the force account work are not specifically purchased for such work but are taken from the Contractor's stock, then in lieu of the invoices the Contractor shall furnish an affidavit certifying that such materials were taken from his stock, that the quantity claimed, was actually used, and that the price and transportation claimed represent the actual cost to the Contractor.

The additional payment, based on the percentages specified above, shall constitute full compensation for all items of expense not specifically provided for in the force account work. The total payment made as provided above shall constitute full compensation for such work.

109-05 PAYMENT FOR OMITTED ITEMS:

As specified in the subsection titled OMITTED ITEMS of Section 104-02(B), the Owner's Engineer shall have the right to omit from the work (order nonperformance) any contract item, except major contract items, in the best interest of the Owner.

Should the Owner's Engineer omit to order nonperformance of a contract item or portion of such item from the work, the Contractor shall accept payment in full at the contract prices for any work actually completed and acceptable prior to the Owner's Engineer's order to omit or non-perform such contract item.

Acceptable materials ordered by the contract or delivered on the work prior to the date of the Owner's Engineer's order will be paid for at the actual cost to the Contractor and shall thereupon become the property of the Owner.

In addition to the reimbursement hereinbefore provided, the Contractor shall be reimbursed for all actual costs incurred for the purpose of performing the omitted contract item prior to the date of the Owner's Engineer's order. Such additional costs incurred by the Contractor must be directly related to the deleted contract item and shall be supported by certified statements by the Contractor as to the nature and amount of such costs.

109-06 THRU 109-08 BLANK

Section 109-Measurement and Payment continued…

109-09 ACCEPTANCE AND FINAL PAYMENT:
When the contract work has been accepted in accordance with the requirements of the subsection titled FINAL ACCEPTANCE of Section 105-20(B), the Owner's Engineer will prepare the final estimate of the items of work actually performed. The Contractor shall approve the Owner's Engineer's final estimate or advise the Owner's Engineer of his objections to the final estimate which are based on disputes in measurements or computations of the final quantities to be paid under the contract as amended by change order or supplemental agreement. The Contractor and Owner's Engineer shall resolve all disputes (if any) in the measurement and computation of final quantities to be paid within 30 calendar days of the Contractor's receipt of the Owner's Engineer's final estimate. If, after such 30-day period, a dispute still exists, the Contractor may approve the Owner's Engineer's estimate under protest of the quantities in dispute and such disputed quantities shall be considered by the Owner as a claim in accordance with the subsection titled CLAIMS FOR ADJUSTMENT AND DISPUTES of Section 105-21.

After the Contractor has approved, or approved under protest, the Owner's Engineer's final estimate, final payment will be processed based on the entire sum, or the undisputed sum in case of approval under protest, determined to be due the Contractor less all previous payments and all amounts to be deducted under the provisions of the contract. All prior partial estimates and payments shall be subject to correction in the final estimate and payment.

Contractor shall provide an executed Affidavit of Release of Liens and an Affidavit of Payment to the Owners Engineer prior to the release of the final payment.

If the Contractor has filed a claim for additional compensation under the provisions of the subsection titled CLAIMS FOR ADJUSTMENTS AND DISPUTES of Section 105-21 or under the provisions of this subsection, such claims will be considered by the Owner in accordance with local laws or ordinances. Upon final adjudication of such claims, any additional payment determined to be due the Contractor will be paid pursuant to a supplemental, final estimate.

SECTION 201 CLEARING AND GRUBBING:
Clearing and Grubbing shall be in accordance with Section 201 of the ADOT Standard Specifications unless modified herein.

201-3.02 Removal and Disposal of Materials: the second and third paragraphs of the Standard Specifications are revised to read:

In the disposal of all tree trunks, stumps, brush, limbs, roots, vegetation and other debris, the contractor shall comply with the requirements of Title 49, Chapter 3, of the Arizona Revised Statutes, and with the Rules and Regulations for Air Pollution Control, Title 18, Chapter 2, Article 6, adopted by the Arizona Department of Environmental Quality pursuant to the authority granted by the Arizona Administrative Code.

Section 201-Clearing and Grubbing continued…

Burning will be permitted only after the contractor has obtained a permit from the Arizona Department of Environmental Quality and from any other Federal, State, County or City Agency that may be involved.

SECTION 202 REMOVAL OF STRUCTURES AND OBSTRUCTIONS:
Removal of Structures and Obstructions shall be in accordance with Section 202 of the ADOT Standard Specifications unless modified herein.

202-5 Basis of Payment: the first paragraph of the Standard Specifications is revised to read:
Payment for the accepted quantities of removal of structures and obstructions will be made by lump sum or by specific removal items or by a combination of both. Payment for removal of structures and obstructions not listed in the bidding schedule, but necessary to perform the construction operations designated on the project plans or specified in the Special Provisions shall be considered as included in the prices of contract items.

When saw cutting is not included as a contract pay item, full compensation for any saw cutting necessary to perform the construction operations designated on the plans shall be considered as included in the price of contract items.

SECTION 205 GRADING ROADWAY FOR PAVEMENT:
Grading roadway for pavement shall be in accordance with Section 205 of the ADOT Standard Specifications unless modified herein.

SECTION 207 DUST PALLIATIVE:
207-1 Description:
The work under this section shall consist of applying all water required for the control of dust as considered necessary for the safety and convenience of the traveling public, and for the reduction of the dust nuisance to adjacent property.

207-2 BLANK

Section 207-Dust Palliative continued…

207-3 Construction Requirements:
The use of pressure pumps and spray bars on all sprinkling equipment used for the application of dust palliative will be required. The use of gravity flow spray bars and splash plates will not be permitted.

Water applied for dust control shall be as approved or directed by the Engineer. The contractor shall provide appropriate equipment for effective control of dust.

207-4 Method of Measurement and Basis of Payment:
No measurement will be made for application of dust palliative, including furnishing water and all necessary equipment and labor, the cost being considered as included in contract items.

SECTION 303 AGGREGATE SUBBASES AND AGGREGATE BASES:
Aggregate Base Course shall be Class II in accordance with Section 303 of the ADOT Standard Specifications unless modified herein.

SECTION 403 ASPHALTIC CONCRETE HOT PLANT REQUIREMENTS:
Asphaltic Concrete Hot Plant Requirements shall be in accordance with Section 403 of the ADOT Standard Specifications unless modified herein.

403-2 Requirements: the third paragraph of the Standard Specifications is revised to read:
The mineral admixture shall be added and thoroughly mixed with the mineral aggregate by means of a mechanical mixing device prior to the mineral aggregate and mineral admixture entering the dryer. For all asphaltic concrete mixes except ACFC (Specification Sections 407 and 411) and AR-ACFC (Specification Section 414), the moisture content of the combined mineral aggregate shall be a minimum of three percent by weight of the aggregate during the mixing process.

Section 403-Aphaltic Concrete Hot Plant Requirements continued…

403-2 Requirements: the twelfth paragraph of the Standard Specifications is revised to read:
The contractor shall provide daily documentation of the weight and proportion of each individual component (mineral aggregate, mineral admixture, and bituminous material) incorporated into the mix. In addition, when reclaimed asphaltic pavement (RAP) is used, the contractor shall provide daily documentation of the weight, determined by a belt scale, and proportion of material from each individual RAP stockpile incorporated into the mix. The percent moisture content of the RAP material from each stockpile shall also be determined and provided daily by the contractor.

When Warm Mix Asphalt (WMA) technologies are used, the contractor shall provide the percent of water (for WMA water foaming processes) and/or the percent of WMA additive incorporated in the mix. The percent of each WMA technology shall be reported either by weight of total mix or by weight of total binder.

When incorporating WMA technologies, the hot plant shall be modified as required by the WMA technology manufacturer to introduce the WMA technology. Plant modifications may include additional plant instrumentation, the installation of asphalt binder foaming systems and/or WMA additive delivery systems, adjusting the plant burner and/or the mixing drum flights in order to operate at lower production temperatures, and/or reducing the production rate of WMA.

SECTION 404 BITUMINOUS TREATMENTS:
Bituminous Treatments shall be in accordance with Section 404 of the ADOT Standard Specifications unless modified herein.

404-3.12 Tack Coat: of the Standard Specifications is revised to read:
Tack coat shall be applied prior to placing a bituminous mixture on a primed surface, an existing bituminous surface, or an existing Portland cement concrete pavement surface. Tack coat shall also be applied between layers of bituminous mixtures. A light coat of bituminous material shall also be applied to edges or vertical surfaces against which a bituminous mixture is to be placed.

The contractor shall choose the bituminous material to be used for tack coat. The Engineer must approve the contractor's choice of bituminous material prior to its use.

The bituminous material used for tack coat shall conform to the requirements of Section 1005.

The rate of application for the specific usage will be specified by the Engineer. The following table shows approximate tack coat application rates:

Section 404-Bituminous Treatments continued…

Type of Bituminous Material	**Approximate Tack Coat Application Rates: Gallons / Square Yard**		**Payment Factor**
	Prior to Placing ACFC or AR-ACFC	**All Other Tack Coats**	
Emulsified Asphalt (Special Type) – See Note Below.	Not Allowed	0.12	0.7
Emulsified Asphalt (Other than Special Type)	0.08	0.08	1.0
Asphalt Cement	0.06 to 0.08	0.06 to 0.08	1.0
Note: Emulsified Asphalt (Special Type) shall consist of Type SS-1 or CSS-1 emulsified asphalt diluted with water to provide an asphalt content of not less than 26 percent.			

If emulsified asphalt of any type is used, it shall have broken before the bituminous mixture is placed.

If emulsified asphalt of any type is held overnight, it shall be reheated and agitated prior to further application.

The Engineer may either adjust the application rate or, except as specified below, eliminate the use of tack coat in any part of the work if, in the Engineer's judgment, the bituminous mixture to be placed will be effectively bonded to the underlying surface. For asphaltic concrete friction course, asphaltic concrete friction course (asphalt-rubber), or asphaltic concrete (asphalt-rubber), application of the tack coat immediately prior to placing such pavements shall not be eliminated, although the Engineer may adjust the application rate.

Tack coat shall be applied only as far in advance of the placement of the bituminous mixture as is necessary to obtain the proper condition of tackiness. In no event shall more tack coat be applied in one day than will be covered by the bituminous mixture during that same day.

SECTION 409 ASPHALT CONCRETE (MISCELLANEOUS STRUCTURAL):
Asphaltic Concrete Pavement shall be in accordance with Section 409 of the ADOT Standard Specifications except as modified herein.

Where new pavement matches existing pavement a thickened edge will be required per MAG Standard Detail 201, Type A (Detail dated 01-01-2014). The cost of constructing each thickened edge shall be considered included in the cost of Bidding Item No. 409.

409-1 Description: of the Standard Specifications is revised to read:
The work under this section shall consist of constructing Asphaltic Concrete (Miscellaneous Structural), hereinafter asphaltic concrete, by furnishing all materials, mixing at a plant, hauling and placing a mixture of aggregate materials, mineral admixture, and bituminous material (asphalt cement) to form a pavement course or to be used for other specified purposes, in accordance with the details shown on the project plans and the requirements of these specifications, and as directed by the Engineer.

The contractor shall acquire and make all arrangements for a source or sources of material, furnish a mix design which will meet the design criteria specified hereinafter, and provide all the equipment, materials, and labor necessary to complete the work.

409-2 Materials: of the Standard Specifications is modified to add:
The bidding schedule quantity of asphaltic concrete is based on an estimated unit weight of **145** pounds per cubic foot.

409-2.02 Bituminous Material: the first paragraph of the Standard Specifications is revised to read:
Asphalt cement shall be a performance grade (PG) asphalt binder, conforming to the requirements of Section 1005. The type of asphalt binder shall be **PG 64-22**.

409-2.03 Mineral Admixture: the last paragraph of the Standard Specifications is revised to read:
The certification and acceptance of Portland cement, blended hydraulic cement, and hydrated lime shall be in accordance with Materials Policy and Procedure Directive No. 13, "Certification and Acceptance of Hydraulic Cement, Fly Ash, Natural Pozzolan, Silica Fume, and Lime".

409-2.04 Mix Design: the third and fourth paragraphs of the Standard Specifications are revised to read:
The mix design shall be prepared by or under the direct supervision of a professional engineer experienced in the development of mix designs and mix design testing. The mix design shall be provided in a format that clearly indicates all the mix design requirements and shall be sealed, signed, and dated by the mix design engineer.

Section 409-Asphalt Concrete (Miscellaneous Structural) continued…

The mix design shall be prepared by a mix design laboratory that has met the requirements of the Materials Policy and Procedure Directive No. 19, "ADOT System for the Evaluation of Testing Laboratories".

The contractor may propose the use of a mix design that has been developed for a previous project. The proposed mix design shall meet the requirements of these specifications. The contractor shall provide evidence that the type and source of bituminous material, the type of mineral admixture, and the source and methods of producing mineral aggregate have not changed since the formulation of the previous mix design. The contractor shall also provide current test results for all specified characteristics of the mineral aggregate proposed for use. The Engineer will determine if the previously used mix design is suitable for the intended use and if the previous use of the mix design was satisfactory to the Department. The Engineer will either approve or disapprove the proposed mix design. Should the Engineer disapprove the use of the previously used mix design, the contractor shall prepare and submit a new mix design proposal in accordance with the requirements of these specifications.

A previously used mix design older than two years from the date it was formulated, sealed, signed, and dated shall not be allowed for use. Once approved for use on a project, a previously used mix design may be used for the duration of that project.

409-2.04 Mix Design: the last two paragraphs of the Standard Specifications are revised to read:
The mix design shall meet the following criteria when tested in accordance with the requirements of the following test methods:

Criteria	**Requirement**	**Arizona Test Method**
1. Voids in Mineral Aggregate: %, Range	14.5 – 18.5	815
2. Effective Voids: %, Range	5.3 – 5.7	815
3. Absorbed Asphalt: %, Range	0 – 1.0	815

The Engineer reserves the right to adjust the asphalt content during production from the mix design value without additional compensation to the contractor in order to obtain desirable effective voids.

409-2.05 Sampling and Testing: of the Standard Specifications is revised to read:
Sampling and testing the materials and mixture for quality control purposes shall be the contractor's responsibility. The Engineer reserves the right to sample and test the materials and mixture when necessary to determine that they reasonably conform to the requirements specified herein.

Section 409-Asphalt Concrete (Miscellaneous Structural) continued…

409-3.01 General: the ninth, tenth, eleventh, and twelfth paragraphs of the Standard Specifications are revised to read:
All wheels and tires of compactors and other equipment surfaces shall be treated when necessary with a release agent approved by the Engineer in order to prevent the sticking of asphaltic concrete. Release agents which degrade, dissolve, or in any way damage the bituminous material shall not be used. Diesel fuel shall not be used as a release agent.

Asphaltic concrete immediately behind the laydown machine shall be in a thoroughly mixed, free-flowing, and workable condition, be free of lumps and crusts, and have a minimum temperature of 275 degrees F.

All courses of asphaltic concrete shall be placed and finished by means of self-propelled paving machines except under certain conditions or at certain locations where the Engineer deems the use of self-propelled paving machines impractical.

The speed of the paving machine shall be coordinated with the production of the plant and an adequate number of trucks for hauling asphaltic concrete shall be available in order to achieve, as far as practical, a continuous operation.

Self-propelled paving machines shall spread the mixture within the specified tolerances, without segregation or tearing, true to the line, grade, and crown indicated on the project plans. Pavers shall be equipped with hoppers and augers which will distribute the mixture uniformly in front of adjustable screeds.

409-3.01 General: the seventeenth paragraph of the Standard Specifications is revised to read:
Before asphaltic concrete is placed, the surface to be paved shall be cleaned of all objectionable material and tacked with bituminous material in accordance with the requirements of Section 404.

409-5.02 Reduction for Noncompliance: of the Standard Specifications is revised to read:
A reduction in payment to the contractor for asphaltic concrete will be made for quantities of asphalt cement (bituminous material) that do not meet the requirements of Section 1005 as determined by corresponding test results. Adjustments in payment will be made in accordance with the requirements of Table 1005-1 and the following formula:

$$R = (100 - P) \ x \left[\frac{(CP) \, x \, T}{100} \right]$$

Section 409-Asphalt Concrete (Miscellaneous Structural) continued…

Where:

R = Amount of Reduction in Payment (dollars)
T = Quantity of asphalt cement in failure (tons, rounded to nearest tenth)
P = Percent of Contract Unit Price allowed (Table 1005-1)
CP = Current Price for asphalt cement (bituminous material), as determined by the Department, for the month in which a deficiency was noted. This value will be made known by means of a memorandum issued on the last Wednesday of each month and mailed to those currently receiving copies of the Advertisements for Bids. This information may also be obtained from ADOT Contracts and Specifications Services, (602) 712-7221, or from ADOT's website.

SECTION 501 PIPE CULVERT AND STORM DRAINS:
Pipe culvert shall be in accordance with Section 501 of the ADOT Standard Specifications except as modified herein.

For each of the pipe culverts to be installed as shown in the project plans, bedding material shall be cement-treated slurry as described in Section 501 of the ADOT Standard Specifications. For the details of the limits of the pipe bedding material, reference shall be made to ADOT's Construction Standard drawings C-13.10 and C-13.15 respectively. No separate measurement or payment will be made for cement-treated slurry. The cost of shall be included in the cost of Bidding Item No. 501.

New pipe culverts shall be corrugated steel pipe with a wall thickness of 0.064 inches, a corrugation configuration of 2 2/3 X 1/2 and shall be coated with either aluminum or zinc.

501-1 Description: the first paragraph of the Standard Specifications is revised to read:
The work under this section shall consist of furnishing pipe and all other materials required and the installing of pipe, including excavating, and furnishing, placing and compacting backfill material, all in accordance with the details shown on the plans and the requirements of the specifications.

501-1 Description: the last sentence of the third paragraph of the Standard Specifications is revised to read:
Special sections, fittings, elbows, branch connections, tapered inlets, end sections, connectors, coupling, and other such items shall be of the same material and coating as the pipe to which they are attached unless otherwise stated in the specifications.

Section 501- Pipe Culvert and Storm Drains continued…

501-3.03(A) General: the second paragraph of the Standard Specifications is revised to read:
If the Engineer determines that the end of an existing pipe is damaged to the extent that it cannot be repaired sufficiently to be joined properly to the new pipe, the damaged portion shall be removed.

Pipe shall be installed in reasonably close conformity with the lines, grades and dimensions shown on the project plans or specified by the Engineer.

501-3.03(B)(1) General: the seventh paragraph of the Standard Specifications is hereby deleted:

501-3.03(G) Corrugated High Density Polyethylene Plastic Pipe: the title and text of the Standard Specifications are revised to read:

501-3.03(G) Corrugated High Density Polyethylene Plastic Pipe and Steel Reinforced High Density Thermoplastic Ribbed Pipe:

Corrugated high density polyethylene plastic pipe and steel reinforced high density thermoplastic ribbed pipe shall be assembled and installed in accordance with the manufacturer's instructions.

Watertight joints, unless otherwise specified, will not be required for storm drains, culverts, or other drainage pipes. However, joints for these pipes shall be water resistant. Watertight joints shall be provided for siphon and irrigation pipe installations.

Watertight and water resistant joints shall conform to the requirements of Subsection 1010-8.

Tracer wire for magnetic detection shall be placed in accordance with the requirements of Subsection 104.15.

Special care shall be taken in the handling and installation of corrugated high density polyethylene plastic pipe and fittings and steel reinforced high density thermoplastic ribbed pipe and fittings to prevent damage and to assure that proper line and pipe grade are maintained throughout the backfilling operation.

When end sections for either pipe are called for on the plans, the contractor shall use metal safety end sections unless otherwise specified.

SECTION 701 MAINTENANCE AND PROTECTION OF TRAFFIC:
Maintenance and Protection of Traffic shall be in accordance with Section 701 of the ADOT Standard Specifications, except as modified herein**.**

701-4 Method of Measurement: is revised to read:
No measurement shall be made for Maintenance and Protection of Traffic. The contract unit of measurement shall be lump sum.

701-5 Basis of Payment: is revised to read:
Payment for Maintenance and Protection of Traffic shall be lump sum and shall be full compensation for all work necessary to provide Maintenance and Protection of Traffic.

SECTION 810 EROSION CONTROL AND POLLUTION PREVENTION:

810-1 Description:
The Contractor shall be responsible for compliance with any rules and regulations of the Arizona Department of Environmental Quality (ADEQ) that may be applicable as a result of the proposed work of this contract. The contractor shall provide the Owner with a copy of all correspondence from ADEQ demonstrating that all permits for the work have been obtained, all requirements have been met and approval to begin the work has been granted.

The work under this section shall include furnishing, installing, maintaining, removing and disposing of temporary erosion control measures needed to fulfill the requirements of the permits needed under this section.

All work specified in this subsection will be temporary for use during construction, unless designated otherwise.

The Contractor shall be responsible for maintaining all erosion and pollution control devices in proper functioning condition at all times during Construction. After completion and final approval of construction activities the Owner shall be responsible for maintaining all erosion and pollution control devices.

When deficiencies in the erosion control devices or other elements of work listed herein are noted by inspection or other observation, specified corrections shall be made by the contractor by the end of the day or work shift, or as directed by the Engineer.

Section 810-Erosion Control and Pollution Prevention continued…

Work specified herein which is lost, destroyed, or deemed unacceptable by the Engineer as a result of the Contractor's operations shall be replaced. Work specified herein which is lost or destroyed, as a result of natural events, such as excessive rainfall, shall be replaced by the Contractor.

In cases of serious or willful disregard for the protection of the waters of the U.S. and/or natural surroundings by the contractor, the Owner's Engineer will immediately notify the Contractor of such non-compliance.

810-2 Method of Measurement:
No measurement shall be made for Erosion Control and Pollution Prevention. The contract unit of measurement shall be lump sum.

810-3 Basis of Payment:
Payment for Erosion Control and Pollution Prevention shall be lump sum and shall be full compensation for all of the work necessary to complete said Erosion Control and Pollution Prevention including all necessary permit fees, materials, equipment and labor associated with said work.

SECTION 901 MOBILIZATION:
Mobilization shall be in accordance with Section 901 of the ADOT Standard Specifications except as modified herein.

The Contractor shall be responsible for providing a construction yard and/or staging area as needed for this project. The cost of shall be included in the cost of Bid Item No. 901.

901-5 Basis of Payment: of the Standard Specifications is revised to read:
Payment for mobilization, measured as provided above, will be made at the contract lump sum price, which shall be full compensation for supplying and furnishing all materials, facilities and services and performing all the work involved as specified herein.

Section 901-Mobilization continued…

Partial payments under this item will be made in accordance with the following provisions. Reference herein to the adjusted contract shall mean the original contract amount exclusive of mobilization:

The first payment of the lump sum price for mobilization will be paid after the Preconstruction Conference provided that all submissions required under ADOT Standard Specifications Subsection 108.03, as applicable to this contract, are submitted by the contractor at the Preconstruction Conference to the satisfaction of the Engineer. The amount paid for the first partial payment will be in accordance with Table 901-1.

The second payment of the lump sum price for mobilization will be made when the Engineer has determined that a significant amount of equipment has been mobilized to the project site which will be used to perform portions of the contract work. The amount paid for the second partial payment will be in accordance with Table 901-1.

The third payment of the lump sum price for mobilization will be made on the first estimate following completion of five percent of the adjusted contract. Such percentage determination will not include partial payments for material on hand. The amount paid for the third payment will be in accordance with Table 901-1.

The fourth payment of the lump sum price for mobilization will be made on the first estimate following completion of 10 percent of the adjusted contract. Such percentage determination will not include partial payments for material on hand. The amount paid for the fourth payment will be in accordance with Table 901-1.

The total sum of all payment shall not exceed the original contract lump sum price for mobilization, regardless of the fact that the contractor may have, for any reason, shut down its work on the project or moved its equipment away from the project and back again.

TABLE 901-1 AMOUNT ALLOWED FOR MOBILIZATION DURING THE LIFE OF THE CONTRACT		
Contract Amount: $	**% Of Contract**	**Basis Of Payment**
0 - 5,000,000	12% *	25% of the lump sum price for mobilization or 3% of the original contract amount, whichever is less.
5,000,000 +	10% *	25% of the lump sum price for mobilization or 2.5% of the original contract amount, whichever is less.
*If the price bid for mobilization exceeds this percentage, any excess will be paid to the contractor upon completion of the contract.		

Section 901-Mobilzation continued…

The adjustment provisions in Section 104 shall not apply to the item of mobilization.

When other contract items are adjusted as provided in Section 104, and if the costs applicable to such items of work include mobilization costs, such mobilization costs will be considered as recovered by the contractor in the lump sum price paid for mobilization, and will be excluded from consideration in determining compensation under Section 104.

When mobilization is not included as a contract item, full compensation for any necessary mobilization required will be considered as included in the prices paid for the various contract items involved and no additional compensation will be made.

SECTION 924 FORCE ACCOUNT WORK (UNFORESEEN CONDITIONS):

924-1 Description:
The work under this item shall serve as a contingency fund for Change Orders, as directed by the Owner's Engineer, in regards to unforeseen conditions and changes to the Scope of Work required to complete the work originally intended.

924-2 Method of Measurement and Basis of Payment:
Measurement and Payment for the unforeseen conditions will be made on a Force Account basis in accordance with the Section 109-04 of these Special Provisions.

SECTION 925 CONSTRUCTION SURVEYING AND LAYOUT:

Construction Surveying and Layout shall be in accordance with Section 925 of the ADOT Standard Specifications unless modified herein.

925-5 Basis of Payment: the first two sentences of the second paragraph of the Standard Specifications are revised to read:

If additional staking and layout are required as a result of additional work ordered by the Engineer, such work will be paid under ITEM 9250101 - ONE-PERSON SURVEY PARTY at the predetermined rate of $65 per hour, ITEM 9250102 - TWO-PERSON SURVEY PARTY at the predetermined rate of $100 per hour, ITEM 9250103 - THREE-PERSON SURVEY PARTY at the predetermined rate of $135 per hour, ITEM 9250106 – SURVEY MANAGER at the predetermined rate of $100 per hour, and ITEM 9250105 - OFFICE SURVEY TECHNICIAN at the predetermined rate of $70 per hour.

SECTION 1005 BITUMINOUS MATERIALS:
Bituminous Materials shall be in accordance with Section 1005 of the ADOT Standard Specifications unless modified herein.

1005-2 Sampling of Bituminous Material: the first sentence of the first paragraph of the Standard Specifications is revised to read:

Sampling of bituminous material shall conform to the requirements of Arizona Test Method 103.

Contract Forms are a binding part of Informal Bid Documents and Awarded Contract.

CONTRACT FORMS

Proposal	P-1 to P-3
Bidding Schedule	BS-1 to BS-2
Bid Bond	BB-1
Qualification & Certification	QC-1 to QC-2
Reference List	RL-1
Affidavit of Non-Collusion	ANC-1
Subcontractor Certification	SC-1
Checklist & Addenda Acknowledgment	CK-1
Contract	C-1 to C-7
Contract Performance Bond	CPB-1
Labor and Materials Bond	LMB-1
Contract Performance Warranty	CPW-1
IRS W-9 Form	W-9

PROPOSAL (P-1 to P-3)

TO THE GILA COUNTY PUBLIC WORKS DIVISION:

Gentlemen:

The following Proposal is made for **BID NO. 011516 Mesa Del Caballo Street Improvements Project, Payson, ARIZONA**, in the County of Gila in the State of Arizona.

The following Proposal is made on behalf of

_____

_____

_____

and no others. The Proposal is in all respects fair and is made without collusion on the part of any person, firm or corporation mentioned above, and no member or employee of Gila County is personally or financially interested, directly or indirectly, in the Proposal, or in any purchase or sale of any materials or supplies for the work to which it relates, or in any portion of the profits thereof.

The undersigned certifies that the approved Plans, Technical Specifications, General and Special Provisions and forms of Contract and Bond authorized by Gila County and constituting essential parts of this Proposal, have been carefully examined, and also that the site of the work has been personally inspected. The undersigned declares that the amount and nature of the work to be done is understood and that at no time will misunderstanding of the Plans, Technical Specifications, General Provisions, Special Provisions, or conditions to be overcome, be plead. On the basis of Plans, Technical Specifications, General and Special Provisions, each Addendum (if any) and the forms of Contract and Bond proposed for use, the undersigned proposes to furnish all the necessary equipment, materials, machinery, tools, apparatus, and other means of construction, and labor, to do all the work in the manner specified and to finish the entire project within the time hereinafter proposed, and to accept, as full compensation therefore, the sum of the various products obtained by multiplying each unit price, herein bid for the work or materials on the attached Bidding Schedule, by the quantity thereof actually incorporated in the complete project, as determined by the Public Works Director. The undersigned understands that the quantities mentioned herein are approximate only and are subject to increase or decrease and hereby proposes to perform all quantities of work as either increased or decreased, in accordance with the provisions of the Specifications, at the unit price bid in the attached Bidding Schedule.

The undersigned further proposes to perform all extra work that may be required on the basis provided in the Specifications and to give such work personal attention and to secure economical performance.

Proposal continued…

The undersigned further proposes to execute the Contract Agreement and furnish satisfactory Bonds within ten (10) calendar days from the date of Notice of Award, time being of the essence. The undersigned further proposes to begin work as specified in the contract attached hereto, and to complete the work **within sixty (60) Calendar Days from the commencement date as specified on the Notice to Proceed,** and maintain at all times a Payment Bond and Performance, Labor and Material Bonds, approved by the Public Works Director, in an amount equal to one hundred (100) percent of the total bid. These bonds shall serve not only to guarantee the completion of the work on the part of the undersigned, but also to guarantee the excellence of both workmanship and material and the payment of all obligations incurred, until the work is finally accepted and the provisions of the Plans, Standard Specifications and Special Provisions fulfilled.

A Proposal Guaranty in the amount and character named in the Call for Bids is enclosed amounting to not less than ten (10) percent of the total bid, which Proposal Guaranty is submitted as a guaranty of the good faith of the bidder and that the bidder will enter into written contract, as provided, to do the work, if successful in securing the award thereof, and it is hereby agreed that if at any time other than as provided in the Proposal requirements and conditions the undersigned should withdraw this Proposal, or if the Proposal is accepted and there should be failure on the part of the undersigned to execute the Contract and furnish satisfactory Bond as herein provided, Gila County, in either of such events, shall be entitled and is hereby given the right to retain the said Proposal Guaranty as liquidated damages.

If by a Corporation:

(SEAL)

Corporate Name: _____

Corporate Address: _____

Incorporated under the laws of the State of : _____

By (Signature): _____ **Date:**_____

President: _____

Secretary: _____

Treasurer: _____

Proposal continued…

If by a Firm or Partnership:

Firm or Partnership Name: _____

Firm or Partnership Address: _____

By (Signature): _____ **Date:**_____

Name and Address of Each Member: _____

_____

_____

_____

_____

If by an Individual:

Signature: _____ **Date:** _____

BIDDING SCHEDULE (BS-1 to BS-2)

MESA DEL CABALLO STREET IMPROVEMENTS PROJECT
GILA COUNTY, ARIZONA

We agree to provide all work and material necessary to complete the project as shown on the plans and specifications for the following Contract Price:

Firm Name: _____

TOTAL CONTRACT PRICE, for the sum of $ _____

WRITTEN TOTAL CONTRACT PRICE

_____**Dollars**

and _____**Cents.**

This Contract Price is based upon the Bidder's quantities and unit prices tabulated on Pages BS-2 of the Proposal. The Bidder agrees that the Contract Price will be payment in full for all work shown on the plans and described in the Contract Documents.

Any authorized increases or decreases to the work shall be authorized by Change Order. The Contract Price shall be increased or decreased by the amount of work or material increased or decreased at the following Bid Unit Prices.

BIDDING SCHEDULE

ITEM	DESCRIPTION	UNIT	ESTIMATED QUANTITIES	UNIT PRICE	EXTENDED AMOUNT
201	Clearing and Grubbing	L.SUM	1		
202	Removal of Structures and Obstructions	L.SUM	1		
205	Grading Roadway for Pavement	SQ.YD.	5200		
303	Aggregate Base, Class 2	CU.YD.	870		
409	Asphaltic Concrete (Misc. Structural)	Ton	715		
501	Pipe, Corrugated Metal, 21"x15"	L.FT	118		
701	Maintenance and Protection of Traffic	L.SUM	1		
810	Erosion Control and Pollution Prevention	L.SUM	1		
901	Mobilization	L.SUM	1		
924	Force Account Work (Unforeseen Conditions)	L.SUM	1	$20,000.00	$20,000.00
925	Construction Surveying and Layout	L.SUM	1		

Total Base Bid _____

GILA COUNTY

SURETY (BID) BOND (BB-1)

(Penalty of this bond must not be less than 10% of the bid amount)

KNOW ALL MEN BY THESE PRESENTS, that we, the undersigned _____,

as Principal, hereinafter called the Principal, and _____,

a corporation duly organized under the laws of the State of _____,

as Surety, hereinafter called the Surety, holding a certificate of authority to transact surety business in this State issued by the Director of the Department of Insurance, are held and firmly bound unto Gila County as Obligee, hereinafter called the Obligee, in the sum of ten percent (10%) of the amount bid, submitted by Principal to Gila County for the work described below, for the payment of which sum well and truly to be made, the said Principal and the said Surety bind ourselves, our heirs, executors, administrators, successors, and assigns, jointly and severally, firmly by these presents.

WHEREAS, the Principal is herewith submitting its proposal for:

BID NO. 011516, **MESA DEL CABALLO STREET IMPROVEMENTS PROJECT, PHASE I**

NOW THEREFORE, if the Obligee, acting by and through its Public Works Director, accepts the proposal of the Principal and the Principal shall enter into contract with the Obligee in accordance with the terms of such proposal, and give such bonds and certificates of insurance as may be specified in the contract documents with good and sufficient surety for the faithful performance of such contract and for the prompt payment of labor and material furnished in the prosecution thereof, or in the event of the failure of the Principal to enter into such contract and give such bonds and certificates of insurance, if the Principal shall pay to the Obligee the difference not to exceed the penalty of the bond between the amount specified in the proposal and such larger amount for which the Obligee may in good faith contract with another party to perform the work covered by the proposal then this obligation is void. Otherwise, it remains in full force and effect provided, however, that this bond is executed pursuant to the provisions of ARS '34-201, and all liabilities on this bond shall be determined in accordance with the provisions of the section to the extent as if it were copied at length herein.

IN WITNESS WHEREOF, we hereunto set our hands and seals:

Principal	**Surety**
By	**By Attorney-in-Fact**
Title	**Address, Attorney-in-Fact** **Subscribed and sworn to before me** **this ____ day of _____, 20____**
	My commission expires: _____
	Notary Public

GILA COUNTY
QUALIFICATION AND CERTIFICATION FORM (QC-1 TO QC-2)

Purpose

This exhibit shall serve as a requirement to enable the evaluation team to assess the qualifications of Contractors under consideration for final award.

The information may or may not be a determining factor in award.

Contract Number 011516-MESA DEL CABALLO STREET IMPROVEMENTS PROJECT-PHASE I

The applicant submitting this Bid warrants the following:

1. Name, Address, and Telephone Number of Principal Contractor:
   _____
   _____
   _____

2. Has Contractor (under its present or any previous name) ever failed to complete a contract?
   _____Yes _____No. If "Yes, give details, including the date, the contracting agency, and the reasons Contractor failed to perform, in the narrative part of this Contract.

3. Has Contractor (under its present or any previous name) ever been disbarred or prohibited from competing for a contract? _____Yes _____No. If "Yes", give details, including the date, the contracting agency, the reasons for the Contractors disqualification, and whether this disqualification remains in effect, in the narrative part of this Contract.

4. Has a contracting agency ever terminated a contract for cause with Contractor (under your firm's present or any previous name)? _____Yes _____No. If "Yes", give details including the date, the contracting agency, and the reasons Contractor was terminated, in the narrative part of this Contract.

5. Contractor must also provide at least the following information:
   a. A brief history of the Contractors Firm.
   b. A Cost Proposal shall be submitted on the Bid Schedule, attached hereon and made a full part of this contract by this reference.
   c. A list of previous and current customers, which are considered identical or similar to the Scope of Work described herein; shall be submitted on the Reference List, attached hereon and made a full part of this contract by this reference.

d. List of any subcontractors (if applicable) to be used in performing the service must accompany the Proposal. The subcontractors Arizona ROC, contact name and phone # must be included.

e. List the specific qualifications the Contractor has in supplying the specified services.

f. Gila County reserves the right to request additional information.

6. Contractor Experience Modifier (e-mod) Rating in Arizona: _____

A method the National Council on Compensation Insurance (NCCI) uses to measure a business' computed loss ratio and determine a factor, which when multiplied by premium, can reward policyholders with lower losses. E-mod rate may be a determining factor in bid award.

7. Current Arizona Contractor License Number: _____

_____

Signature of Authorized Representative

_____

Printed Name

_____

Title

GILA COUNTY
REFERENCE LIST (RL-1)

These references are required to enable the evaluation team to assess the qualifications of the Contractor under consideration for final award. The information may be a determining factor in award.

References
Please list a minimum of four (4) references for projects of similar size and scope as this Invitation for Bids during the past twelve (12) months, in or as close to Gila County as possible.

1. **Company:** _____
   Contact: _____
   Phone: _____
   Address: _____

2. **Company:** _____
   Contact: _____
   Phone: _____
   Address: _____

3. **Company:** _____
   Contact: _____
   Phone: _____
   Address: _____

4. **Company:** _____
   Contact: _____
   Phone: _____
   Address: _____

_____
Name of Business

_____
Signature of Authorized Representative

_____
Title

AFFIDAVIT BY CONTRACTOR (ANC-1)
CERTIFYING THAT THERE WAS NO COLLUSION IN BIDDING FOR CONTRACT

STATE OF ARIZONA)
)ss
COUNTY OF:)

_____
(Name of Individual)
being first duly sworn, deposes and says:

That he is _____
(Title)
of_____ and
(Name of Business)

That he is properly prequalified by Gila County for bidding on **BID NO. 011516, MESA DEL CABALLO STREET IMROVEMENTS PROJECT-PHASE I, PAYSON, ARIZONA** and,

That pursuant to Section 112 (C) of Title 23 USC, he certifies as follows:

That neither he nor anyone associated with the said _____

_____
(Name of Business)

has, directly or indirectly entered into any agreement, participated in any collusion or otherwise taken any action in restraint of free competitive bidding in connection with the above mentioned project.

_____
Name of Business

_____
By

_____
Title

Subscribed and sworn to before me this _____ day of _____, 20_____.

_____ **My Commission expires:**
Notary Public

GILA COUNTY
CERTIFICATION: INTENTIONS CONCERNING SUBCONTRACTING (SC-1)

At the time of the submission of **Invitation for Bid No. 011516, MESA DEL CABALLO STREET IMPROVEMENTS PROJECT-PHASE I,** my intention concerning subcontracting a portion of the work is as indicated below.

In indicating that it is my intention to subcontract a portion of the work, this will acknowledge that such **subcontractors will be identified and approved by the County prior to award of contract**; and that documentation, such as copies of letters, requests for quotations, etc., substantiating the actions taken and the responses to such actions is on file and available for review.

Yes ☐ it is my intention to subcontract a portion of the work.

No ☐ it is not my intention to subcontract a portion of the work.

_____
Name of Business

_____
Signature of Authorized Representative

_____
Title

BIDDERS CHECKLIST (CK-1)

NOTICE IS HEREBY GIVEN that all Bid Documents shall be completed and/or executed and submitted with this bid. If bidder fails to complete and/or execute any portion of the Bid Documents, this bid will be determined to be "non-responsive" and rejected.

CHECKLIST:

REQUIRED DOCUMENT	COMPLETED AND EXECUTED
Proposal	_____
Bidding Schedule	_____
Surety (Bid) Bond	_____
Qualification & Certification Form	_____
Reference List	_____
Affidavit of Non-Collusion	_____
Subcontractor Certification	_____
Contract	_____
Bidders Checklist & Addenda Acknowledgment	_____

ACKNOWLEDGMENT OF RECEIPT OF ADDENDA:

	#1	#2	#3	#4	#5
Initials and Date	_____	_____	_____	_____	_____

Signed and dated this _____ day of_____, 2016.

_____
CONTRACTOR:

_____
BY:

Each proposal shall be sealed in an envelope addressed to Gila County Procurement Department and bearing the following statement on the outside of the envelope: **Proposal to Construct: MESA DEL CABALLO STREET IMPROVEMENTS PROJECT-PHASE I, Payson, Arizona, Bid No. 011516**. All proposals shall be filed at **Gila County Procurement, 1400 E. Ash St., Globe, AZ 85501**, on or before **Wednesday, March 23, 2016.**

GILA COUNTY
CONTRACT NO. 011516 (C-1 TO C-7)

THIS AGREEMENT, made and entered into this _____ day of _____, **2016**, by and between Gila County, a political subdivision of the State of Arizona, party of the first part, hereinafter designated the **OWNER**, and _____ of the City of _____, County of _____, State of Arizona, party of the second part, hereinafter designated the **CONTRACTOR**.

WITNESSETH: That the said **Contractor**, for and in consideration of the sum to be paid him by the said **Owner**, in the manner and at the time hereinafter provided, and of the other covenants and agreements herein contained, and under the penalties expressed in the bond hereto attached, hereby agrees, for himself, his heirs, administrators, successors, and assigns as follows:

ARTICLE I - SCOPE OF WORK: The **Contractor** shall furnish any and all plant materials, labor, construction equipment, and services, required for performing all work for construction for **Bid No. 011516, MESA DEL CABALLO STREET IMPROVEMENTS PROJECT-PHASE I**, **PAYSON, ARIZONA** in accordance with the plans and these specifications, and to completely and totally construct the same and install the material herein for the **Owner**, in a good and workmanlike and substantial manner and to the satisfaction of the **Owner** through its Engineers and under the direction and supervision of the Engineer, or his properly authorized agents and strictly pursuant to and in conformity with the Specifications prepared by the Engineers for the **Owner**, and with such modifications of the same and other documents that may be made by the **Owner** through the Engineer, or his properly authorized agents, as provided herein. Once the Bid has been awarded the bid number 011516 will become the Contract Number.

ARTICLE II - CONTRACT DOCUMENTS: The attached "Call for Bids", "Special Provisions", "Proposal", "Bidding Schedule", "Bid Bond", "Qualification & Certification Forms", "Reference List", "Affidavit of Non-Collusion", "Subcontractor Certification", "Employment Laws Acknowledgment", "Checklist & Addenda Acknowledgment", "Performance Bond", "Labor and Materials Bond", "Contract Performance Bond", and Plans thereto, if any, are by this reference made a part of this Contract to the same extent as if set forth herein in full. In the event of any conflict or any inconsistency in the documents, controlling weight shall be assigned in the following order: the Contract; the Special Provisions; all other documents. The Contract is considered invalid unless signed by the Gila County Board of Supervisors.

ARTICLE III – SAFETY AND LOSS CONTROL: The Gila County Safety and Loss Control booklet must be read and signed by all working at the job site.

Contract continued…

ARTICLE IV – INDEMNIFICATION CLAUSE: The Contractor agrees to indemnify and save harmless the County of Gila, its officers, agents and employees, and any jurisdiction or agency issuing permits for any work included in the project, their officers, agents and employees, hereinafter referred to as indemnitee, from all suits and claims, including attorney's fees and cost of litigation, actions, loss, damage, expense, cost or claims of any character or any nature arising out of the work done in fulfillment of the terms of this Contract or on account of any act, claim or amount arising or recovered under workers' compensation law or arising out of the failure of the Contractor to conform to any statutes, ordinances, regulation, law or court decree. It is agreed that the Contractor will be responsible for primary loss investigation, defense and judgment costs where this contract of indemnity applies. In consideration of the award of this contract, the Contractor agrees to waive all rights of subrogation against the County, its officers, officials, agents and employees for losses arising from the work performed by the Contractor for the County.

ARTICLE V – INSURANCE REQUIREMENTS: Contractor and subcontractors shall procure and maintain until all of their obligations have been discharged, including any warranty periods under this Contract are satisfied, insurance against claims for injury to persons or damage to property which may arise from or in connection with the performance of the work hereunder by the Contractor, his agents, representatives, employees or subcontractors.

The insurance requirements herein are minimum requirements for this Contract and in no way limit the indemnity covenants contained in this Contract.

The County in no way warrants that the minimum limits contained herein are sufficient to protect the Contractor from liabilities that might arise out of the performance of the work under this Contract by the Contractor, his agents, representatives, employees, or subcontractors. Contractor is free to purchase such additional insurance as may be determined necessary.

A. **MINIMUM SCOPE AND LIMITS OF INSURANCE -** Contractor shall provide coverage with limits of liability not less than those stated below:

1. **Commercial General Liability – Occurrence Form**
   Policy shall include bodily injury, property damage, broad form contractual liability and XCU coverage.
   - General Aggregate $2,000,000
   - Products – Completed Operations Aggregate $1,000,000
   - Personal and Advertising Injury $1,000,000
   - Each Occurrence $1,000,000

Contract continued…

a. The policy shall be endorsed to include the following additional insured language: **"The County of Gila shall be named as an additional insured with respect to liability arising out of the activities performed by, or on behalf of the Contractor".**

2. **Automobile Liability**

Bodily injury and property damage for any owned, hired, and non-owned vehicles used in the performance of this Contract.

Combined Single Limit (CSL)	$1,000,000

a. The policy shall be endorsed to include the following additional insured language: **"The County of Gila shall be named as an additional insured with respect to liability arising out of the activities performed by, or on behalf of the Contractor, including automobiles owned, leased, hired or borrowed by the Contractor".**

3. **Worker's Compensation and Employers' Liability**

Workers' Compensation	Statutory
Employers' Liability	
Each Accident	$100,000
Disease – Each Employee	$100,000
Disease – Policy Limit	$500,000

a. Policy shall contain a **waiver of subrogation** against the County of Gila.

B. **ADDITIONAL INSURANCE REQUIREMENTS:** The policies shall include, or be endorsed to include, the following provisions:

1. On insurance policies where the County of Gila is named as an additional insured, the County of Gila shall be an additional insured to the full limits of liability purchased by the Contractor even if those limits of liability are in excess of those required by this Contract.
2. The Contractor's insurance coverage shall be primary insurance and non-contributory with respect to all other available sources.
3. Coverage provided by the Contractor shall not be limited to the liability assumed under the indemnification provisions of this Contract.

C. **NOTICE OF CANCELLATION:** Each insurance policy required by the insurance provisions of this Contract shall provide the required coverage and shall not be suspended, voided, canceled, reduced in coverage or endorsed to lower limits except after thirty (30) days prior written notice has been given to the County. Such notice shall be sent directly to **Jeannie Sgroi, Contracts Administrator, 1400 E. Ash St., Globe, AZ 85501** and shall be sent by certified mail, return receipt requested.

Contract continued…

D. **ACCEPTABILITY OF INSURERS:** Insurance is to be placed with insurers duly licensed or approved unlicensed companies in the state of Arizona and with an "A.M. Best" rating of not less than B+ VI. The County in no way warrants that the above-required minimum insurer rating is sufficient to protect the Contractor from potential insurer insolvency.

E. **VERIFICATION OF COVERAGE:** Contractor shall furnish the County with certificates of insurance (ACORD form or equivalent approved by the County) as required by this Contract. The certificates for each insurance policy are to be signed by a person authorized by that insurer to bind coverage on its behalf.

All certificates and endorsements are to be received and approved by the County before work commences. Each insurance policy required by this Contract must be in effect at or prior to commencement of work under this Contract and remain in effect for the duration of the project. Failure to maintain the insurance policies as required by this Contract or to provide evidence of renewal is a material breach of contract.

All certificates required by this Contract shall be sent directly to **Jeannie Sgroi, Contracts Administrator, 1400 E. Ash St., Globe, AZ 85501**. The County project/contract number and project description shall be noted on the certificate of insurance. The County reserves the right to require complete, certified copies of all insurance policies required by this Contract at any time**.**

F. **SUBCONTRACTORS:** Contractors' certificate(s) shall include all subcontractors as additional insureds under its policies **or** Contractor shall furnish to the County separate certificates and endorsements for each subcontractor. All coverage's for subcontractors shall be subject to the minimum requirements identified above.

G. **APPROVAL:** Any modification or variation from the insurance requirements in this Contract shall be made by the County Attorney, whose decision shall be final. Such action will not require a formal Contract amendment, but may be made by administrative action.

ARTICLE VI - TIME OF COMPLETION: The Contractor further covenants and agrees, at his own proper cost and expense, to do all work and furnish all materials, labor, construction equipment, and services for performing all of the work for construction of said improvements and to completely construct the same and install the material therein, as called for by this agreement free and clear of all claims, liens, and charges whatsoever, in the manner and under the conditions specified within the time, or times, stated in the Proposal.

Work on this project shall start within **no later than ten (10) Days of the Notice To Proceed,** and shall be completed within the following limits:

Contract continued…

SCHEDULE:

For construction in the contract documents, the project shall be completed within **60 Calendar Days of the commencement date as specified on the Notice To Proceed**.

It is expressly understood and agreed that in case of failure on the part of the Contractor, for any reason, except with the written consent of the Engineer, to complete the work to the satisfaction of the Engineer and within the aforesaid time limits, the Owner may deduct from any money due, or which may become due the Contractor, as liquidated damages, an amount as fixed by the following schedule:

WORK ITEM	DAILY CHARGE PER CALENDAR DAY
All work not complete within the above specified time after start of work.	**$490.00**

If no money shall be due the Contractor, the Owner shall have a cause of action to recover against the Contractor in a court of competent jurisdiction, liquidated damages as fixed by the above schedule; said deduction to be made, or said sum to be recovered, not as a penalty, but as liquidated damages; provided, however, that upon receipt of written notice from the Contractor, of the existence of causes, as herein provided, over which said Contractor has no control and which must delay the completion of the said work or any delay occasioned by the Owner, the Engineer may extend the period hereinafter specified for the completion of said work in accordance with the specifications and in such case, the Contractor shall become liable for said liquidated damages for delays commencing from date said extension period shall expire.

ARTICLE VII - CANCELLATION: This agreement is subject to cancellation pursuant to **A.R.S. §38-511** and **GENERAL PROVISION 108-10 DEFAULT AND TERMINATION OF CONTRACT.**

ARTICLE VIII - PAYMENTS: The Contractor shall make an estimate of the work performed during the preceding month and submit the same to the Engineer for checking. On or before ***thirty (30) days*** after the certified and approved estimate of the work is received by the Owner, the Owner shall pay to the Contractor ninety percent (90%) of the value of said work in place, as approved by the Engineer. The balance of ten percent (10%) of the estimate shall be retained by the Owner until the time of final payment and acceptance of said work, as per **A.R.S. §34-221(A)(2).**

Contract continued…

ARTICLE IX – LAWS AND ORDINANCES: This agreement shall be enforced under the laws of the State of Arizona. The Contractor shall maintain in current status all Federal, State, and Local licenses and permits required for the operation of the business conducted by the Contractor.

The **Contractor** shall comply with the applicable provisions of the Americans with Disabilities Act **(Public Law 101-336, 42 U.S.C. 12101-12213)** and applicable Federal regulations under the Act.

ARTICLE X – LEGAL ARIZONA WORKERS ACT COMPLIANCE: Contractor hereby warrants that it will at all times during the term of this Contract comply with all federal immigration laws applicable to Contractor's employment of its employees, and with the requirements of A.R.S. § 23-214 (A) (together the "State and Federal Immigration Laws"). Contractor shall further ensure that each subcontractor who performs any work for Contractor under this contract likewise complies with the State and Federal Immigration Laws.

County shall have the right at any time to inspect the books and records of Contractor and any subcontractor in order to verify such party's compliance with the State and Federal Immigration Laws.

Any breach of Contractor's or any subcontractor's warranty of compliance with the State and Federal Immigration Laws, or of any other provision of this section, shall be deemed to be a material breach of this Contract subjecting Contractor to penalties up to and including suspension or termination of this Contract. If the breach is by a subcontractor, and the subcontract is suspended or terminated as a result, Contractor shall be required to take such steps as may be necessary to either self-perform the services that would have been provided under the subcontract or retain a replacement subcontractor, (subject to County approval if MWBE preferences apply) as soon as possible so as not to delay project completion.

Contractor shall advise each subcontractor of County's rights, and the subcontractor's obligations, under this Article by including a provision in each subcontract substantially in the following form:

"Subcontractor hereby warrants that it will at all times during the term of this contract comply with all federal immigration laws applicable to Subcontractor's employees, and with the requirements of A.R.S. §23-214 (A). Subcontractor further agrees that County may inspect the Subcontractor's books and records to insure that Subcontractor is in compliance with these requirements. Any breach of this paragraph by Subcontractor will be deemed to be a material breach of this contract subjecting Subcontractor to penalties up to and including suspension or termination of this contract."

Contract continued…

Any additional costs attributable directly or indirectly to remedial action under this Article shall be the responsibility of Contractor. In the event that remedial action under this Article results in delay to one or more tasks on the critical path of Contractor's approved construction or critical milestones schedule, such period of delay shall be deemed excusable delay for which Contractor shall be entitled to an extension of time, but not costs.

IN WITNESS WHEREOF, three (3) identical counterparts of this contract, each of which shall for all purposes be deemed an original thereof, have been duly executed by the parties hereinabove named, on the date and year first above written.

In return for the performance of this Contract by the **Contractor**, the **Owner** agrees to pay the amount of _$_____ **INCLUDING ALL APPLICABLE TAXES** through a payment schedule as described in the Contract documents and as may be modified and executed by change orders and by final quantities.

The **Contractor** agrees that this contract, as awarded, is for the following work, and understands that payment for the total work will be made on the basis of the indicated amount(s), as bid in the Proposal and attached Bidding Schedule for:

MESA DEL CABALLO STREET IMPROVEMENTS PROJECT-PHASE I
CONTRACT NO. 011516

OWNER:

GILA COUNTY BOARD OF SUPERVISORS

_____
Michael A. Pastor, Chairman, Board of Supervisors

ATTEST:

_____
Marian Sheppard, Clerk of the Board

APPROVED AS TO FORM:

_____
Jefferson R. Dalton, Deputy Gila County Attorney, Civil Bureau Chief
***for* Bradley D. Beauchamp, County Attorney**

CONTRACTOR:

_____
Contractor Signature

_____
Print Name

_____
Witness (If Contractor is Individual)

STATUTORY PERFORMANCE BOND (CPB-1)

PURSUANT TO TITLE 34, CHAPTER 2, ARTICLE 2 OF THE ARIZONA REVISED STATUTES

(PENALTY OF THIS BOND MUST BE 100% OF CONTRACT AMOUNT)

KNOW ALL MEN BY THESE PRESENTS:

That,

_____

_____, (hereinafter called the Principal), as Principal,

and

_____

(hereinafter called Surety), a corporation duly organized and existing the laws of the State of

_____ with its principal office in the city of _____ holding a certificate of authority to transact surety business in Arizona issued by the Director of the Department of Insurance, as Surety, are held and firmly bound unto Gila County (hereinafter called the Obligee) in the amount of (100% OF CONTRACT AMOUNT)_____ dollars ($_____), for the payment whereof, the said Principal and Surety bind themselves, and their heirs, administrator, executors, successors, and assigns, jointly and severally, firmly by these presents.

WHEREAS, the Principal has agreed to enter into a certain contract with the Obligee for: **MESA DEL CABALLO STREET IMPROVEMENTS PROJECT-PHASE I, PAYSON, ARIZONA,** which contract is hereby referred to and made a part hereof as fully and to the same extent as if copied at length herein.

NOW, THEREFORE, THE CONDITION OF THIS OBLIGATION IS SUCH, that if the said Principal shall faithfully perform and fulfill all the undertakings, covenants, terms, conditions and agreements of said contract during the original term of said contract and any extension thereof, with or without notice to the Surety, and during the life of any guaranty required under the contract, and shall also perform and fulfill all the undertakings, covenants, terms, conditions, and agreements of any and all duly authorized modifications of said contract that may hereafter be made, notice of which modifications to the Surety being hereby waived; then the above obligation shall be void, otherwise to remain in full force and effect;

PROVIDED, HOWEVER, that this bond is executed pursuant to the provisions of Title 34, Chapter 2, Article 2, of the Arizona Revised Statutes, and all liabilities on this bond shall be determined in accordance with the provisions of said Title, Chapter and Article, so the extent as if they were copied at length herein.

The prevailing party in a suit on this bond shall recover as a part of the judgment such reasonable attorneys' fees as may be fixed by a judge of the court.

Witness our hands this _____ day of _____, 2016.

_____

Pri**ncipal** **Seal**

_____ _____

Surety **Seal** **By:**

_____ _____

Agency of Record **By:**

_____ _____

Arizona Countersignature **Agency Address**

_____

Address

_____

Phone Number

STATUTORY LABOR AND MATERIALS BOND (LMB-1)

PURSANT TO TITLE 34, CHAPTER 2, ARTICLE 2 OF THE ARIZONA REVISED STATUTES

(PENALTY OF THIS BOND MUST BE 100% OF CONTRACT AMOUNT)

KNOW ALL MEN BY THESE PRESENTS:

That,
_____

_____, (hereinafter called the Principal), as Principal, and
_____
(hereinafter called Surety), a corporation duly organized and existing the laws of the State of

_____ with its principal office in the city of _____ holding a certificate of authority to transact surety business in Arizona issued by the Director of the Department of Insurance, as Surety, are held and firmly bound unto Gila County (hereinafter called the Obligee) in the amount of (100% of Contract Amount)_____ dollars ($_____), for the payment whereof, the said Principal and Surety bind themselves, and their heirs, administrator, executors, successors, and assigns, jointly and severally, firmly by these presents.

WHEREAS, the Principal has agreed to enter into a certain contract with the Obligee for: **MESA DEL CABALLO STREET IMPROVEMENTS PROJECT-PHASE I, PAYSON, ARIZONA,** which contract is hereby referred to and made a part hereof as fully and to the same extent as if copied at length herein.

NOW, THEREFORE, THE CONDITION OF THIS OBLIGATION IS SUCH, that if the said Principal shall faithfully perform and fulfill all the undertakings, covenants, terms, conditions and agreements of said contract during the original term of said contract and any extension thereof, with or without notice to the Surety, and during the life of any guaranty required under the contract, and shall also perform and fulfill all the undertakings, covenants, terms, conditions, and agreements of any and all duly authorized modifications of said contract that may hereafter be made, notice of which modifications to the Surety being hereby waived; then the above obligation shall be void, otherwise to remain in full force and effect;

PROVIDED, HOWEVER, that this bond is executed pursuant to the provisions of Title 34, Chapter 2, Article 2, of the Arizona Revised Statutes, and all liabilities on this bond shall be determined in accordance with the provisions of said Title, Chapter and Article, so the extent as if they were copied at length herein.

The prevailing party in a suit on this bond shall recover as a part of the judgment such reasonable attorneys' fees as may be fixed by a judge of the court.

Witness our hands this _____ day of _____, 2016.

_____
Pri**ncipal** **Seal**

_____ _____
Surety **Seal** **By:**

_____ _____
Agency of Record **By:**

_____ _____
Arizona Countersignature **Agency Address**

_____
Address

_____
Phone Number

GILA COUNTY
CONTRACT PERFORMANCE WARRANTY (CPW-1)

I, _____, representing

_____ (company name)

do hereby warranty the work performed for the:

MESA DEL CABALLO STREET IMPROVEMENTS PROJECT-PHASE I, PAYSON, ARIZONA,

for a period of **two (2) years** from completion of said work.

Said work shall be free from defects which would cause the work not to perform in its intended manner.

_____

(Officer, Partner, Owner) **Date**

Form **W-9**
(Rev. December 2014)
Department of the Treasury
Internal Revenue Service

Request for Taxpayer Identification Number and Certification

Give Form to the requester. Do not send to the IRS.

Print or type
See Specific Instructions on page 2.

1 Name (as shown on your income tax return). Name is required on this line; do not leave this line blank.

2 Business name/disregarded entity name, if different from above

3 Check appropriate box for federal tax classification; check only **one** of the following seven boxes:
☐ Individual/sole proprietor or single-member LLC ☐ C Corporation ☐ S Corporation ☐ Partnership ☐ Trust/estate
☐ Limited liability company. Enter the tax classification (C=C corporation, S=S corporation, P=partnership) ▶
Note. For a single-member LLC that is disregarded, do not check LLC; check the appropriate box in the line above for the tax classification of the single-member owner.
☐ Other (see instructions) ▶

4 Exemptions (codes apply only to certain entities, not individuals; see instructions on page 3):
Exempt payee code (if any)
Exemption from FATCA reporting code (if any)
(Applies to accounts maintained outside the U.S.)

5 Address (number, street, and apt. or suite no.)

Requester's name and address (optional)

6 City, state, and ZIP code

7 List account number(s) here (optional)

Part I Taxpayer Identification Number (TIN)

Enter your TIN in the appropriate box. The TIN provided must match the name given on line 1 to avoid backup withholding. For individuals, this is generally your social security number (SSN). However, for a resident alien, sole proprietor, or disregarded entity, see the Part I instructions on page 3. For other entities, it is your employer identification number (EIN). If you do not have a number, see *How to get a TIN* on page 3.

Note. If the account is in more than one name, see the instructions for line 1 and the chart on page 4 for guidelines on whose number to enter.

Social security number
☐☐☐ – ☐☐ – ☐☐☐☐

or

Employer identification number
☐☐ – ☐☐☐☐☐☐☐

Part II Certification

Under penalties of perjury, I certify that:

1. The number shown on this form is my correct taxpayer identification number (or I am waiting for a number to be issued to me); and
2. I am not subject to backup withholding because: (a) I am exempt from backup withholding, or (b) I have not been notified by the Internal Revenue Service (IRS) that I am subject to backup withholding as a result of a failure to report all interest or dividends, or (c) the IRS has notified me that I am no longer subject to backup withholding; and
3. I am a U.S. citizen or other U.S. person (defined below); and
4. The FATCA code(s) entered on this form (if any) indicating that I am exempt from FATCA reporting is correct.

Certification instructions. You must cross out item 2 above if you have been notified by the IRS that you are currently subject to backup withholding because you have failed to report all interest and dividends on your tax return. For real estate transactions, item 2 does not apply. For mortgage interest paid, acquisition or abandonment of secured property, cancellation of debt, contributions to an individual retirement arrangement (IRA), and generally, payments other than interest and dividends, you are not required to sign the certification, but you must provide your correct TIN. See the instructions on page 3.

Sign Here **Signature of U.S. person ▶** **Date ▶**

General Instructions

Section references are to the Internal Revenue Code unless otherwise noted.

Future developments. Information about developments affecting Form W-9 (such as legislation enacted after we release it) is at *www.irs.gov/fw9*.

Purpose of Form

An individual or entity (Form W-9 requester) who is required to file an information return with the IRS must obtain your correct taxpayer identification number (TIN) which may be your social security number (SSN), individual taxpayer identification number (ITIN), adoption taxpayer identification number (ATIN), or employer identification number (EIN), to report on an information return the amount paid to you, or other amount reportable on an information return. Examples of information returns include, but are not limited to, the following:

- Form 1099-INT (interest earned or paid)
- Form 1099-DIV (dividends, including those from stocks or mutual funds)
- Form 1099-MISC (various types of income, prizes, awards, or gross proceeds)
- Form 1099-B (stock or mutual fund sales and certain other transactions by brokers)
- Form 1099-S (proceeds from real estate transactions)
- Form 1099-K (merchant card and third party network transactions)
- Form 1098 (home mortgage interest), 1098-E (student loan interest), 1098-T (tuition)
- Form 1099-C (canceled debt)
- Form 1099-A (acquisition or abandonment of secured property)

Use Form W-9 only if you are a U.S. person (including a resident alien), to provide your correct TIN.

If you do not return Form W-9 to the requester with a TIN, you might be subject to backup withholding. See *What is backup withholding?* on page 2.

By signing the filled-out form, you:

1. Certify that the TIN you are giving is correct (or you are waiting for a number to be issued),

2. Certify that you are not subject to backup withholding, or

3. Claim exemption from backup withholding if you are a U.S. exempt payee. If applicable, you are also certifying that as a U.S. person, your allocable share of any partnership income from a U.S. trade or business is not subject to the withholding tax on foreign partners' share of effectively connected income, and

4. Certify that FATCA code(s) entered on this form (if any) indicating that you are exempt from the FATCA reporting, is correct. See *What is FATCA reporting?* on page 2 for further information.

APPENDIX A

(REFERENCED STANDARD DETAILS)

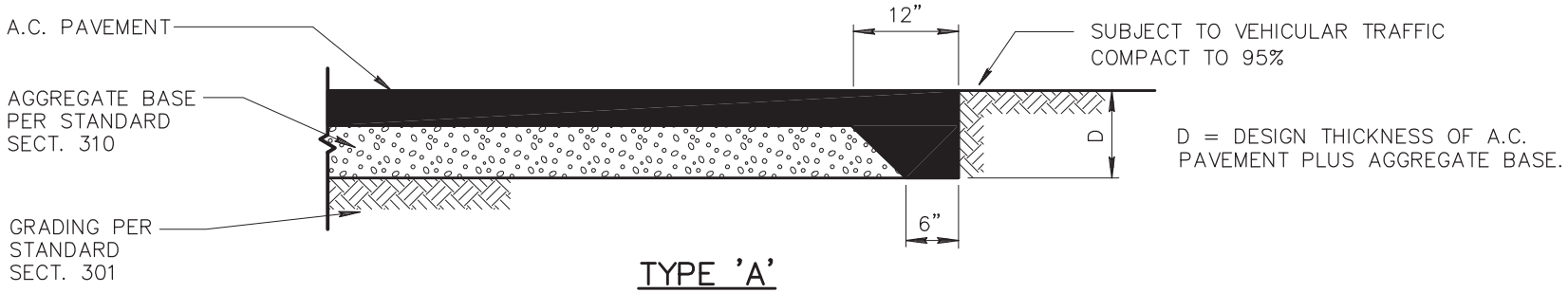

TYPE 'A'

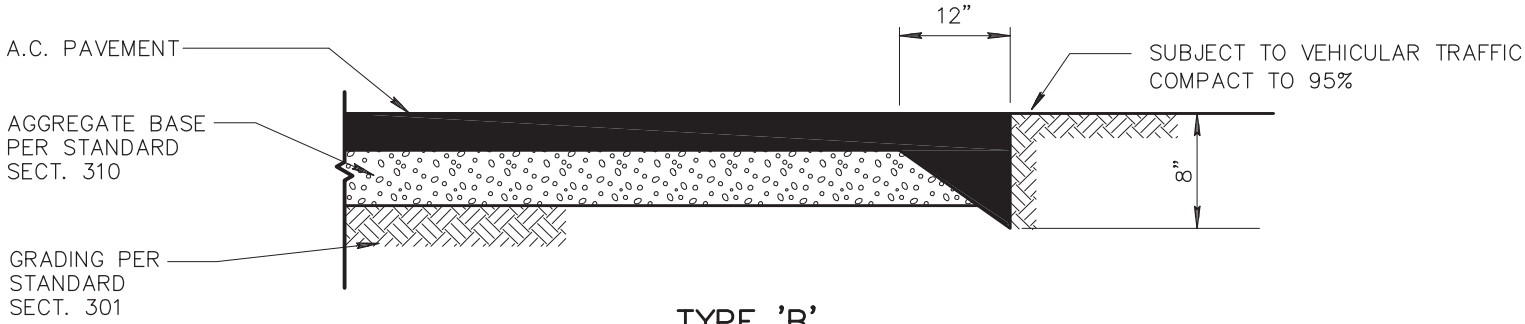

TYPE 'B'

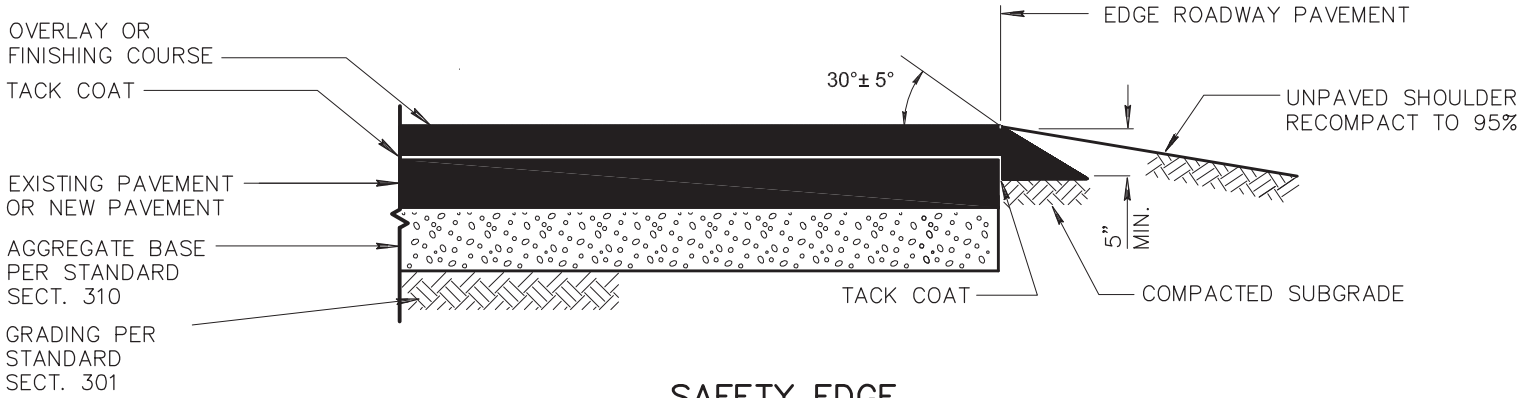

SAFETY EDGE

DETAIL NO.		STANDARD DETAIL		DATE	DETAIL NO.
201	MARICOPA ASSOCIATION of GOVERNMENTS	ENGLISH	ASPHALT PAVEMENT EDGE DETAILS	01–01–2014	201

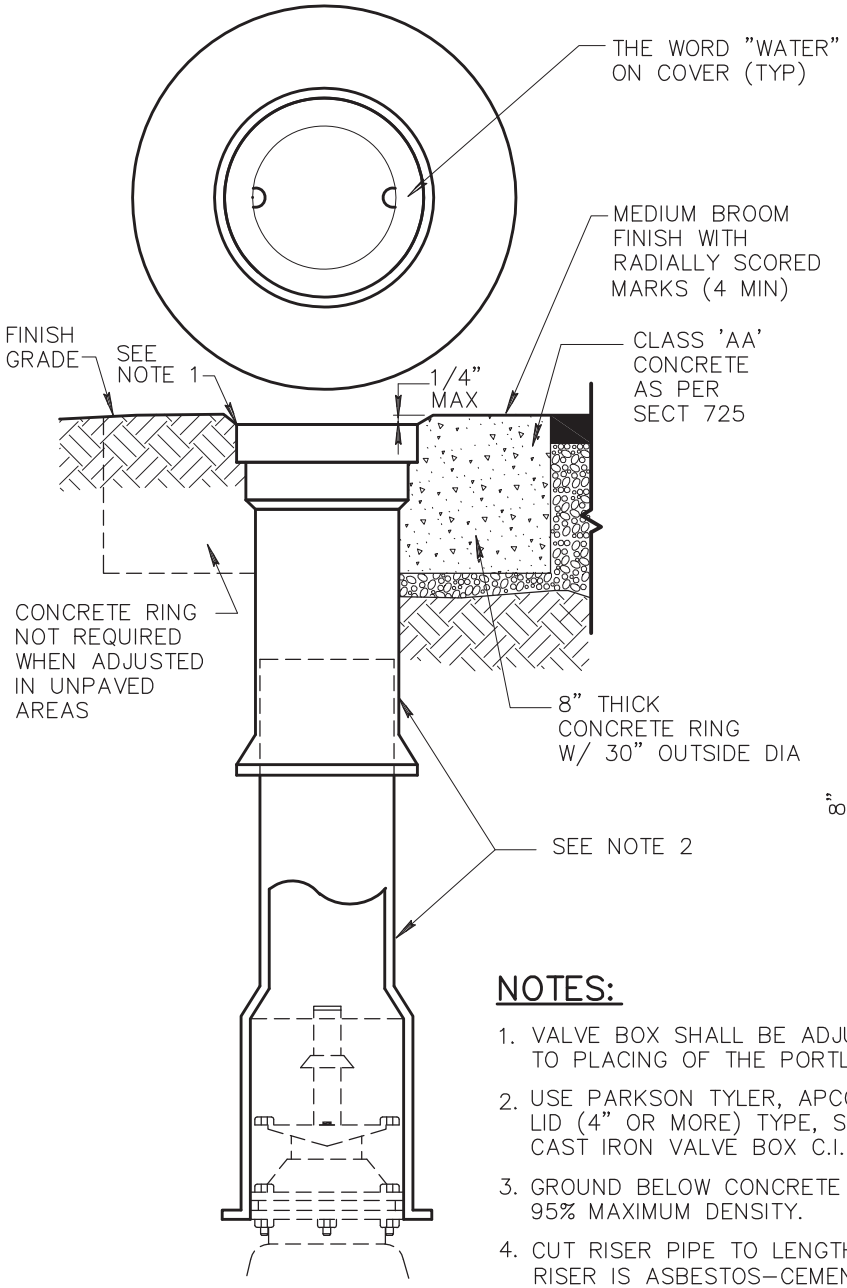

TYPE 'C'

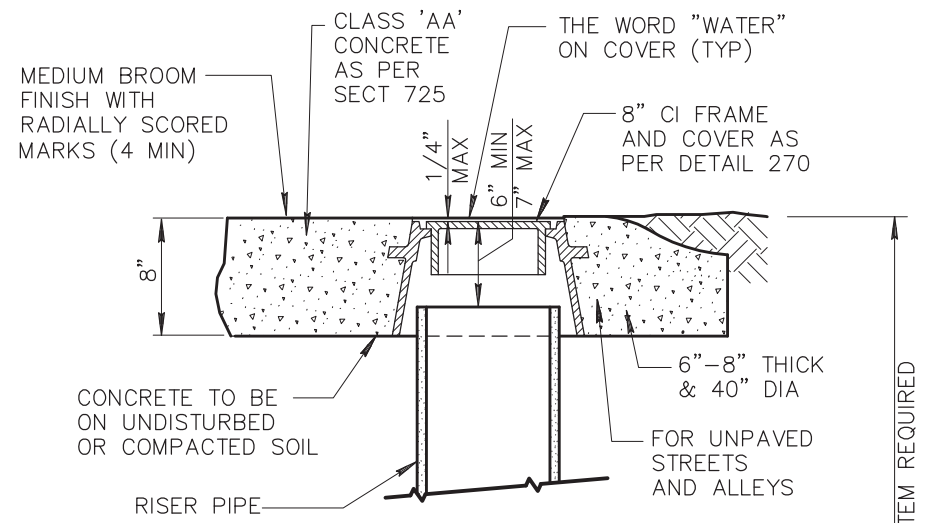

TYPE 'A'

(TO BE USED IN AREAS SUBJECT TO VEHICULAR TRAFFIC)

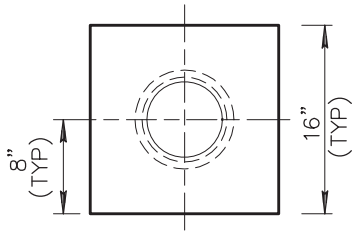

VIEW A–A

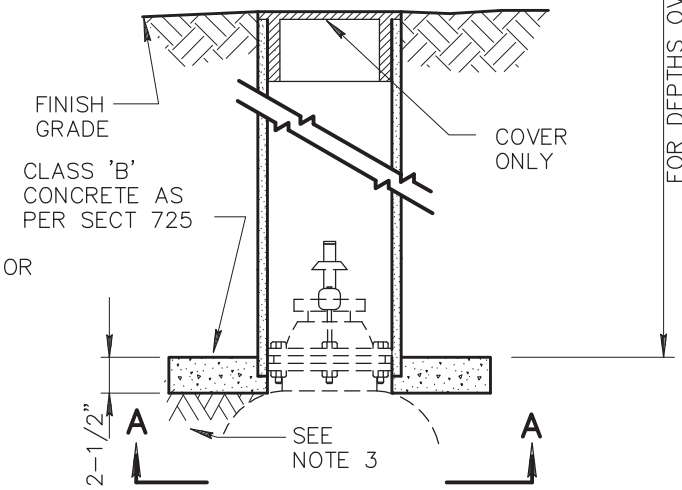

TYPE 'B'

(NOT SUBJECT TO VEHICULAR TRAFFIC)

NOTES:

1. VALVE BOX SHALL BE ADJUSTED TO THE FINISHED GRADE PRIOR TO PLACING OF THE PORTLAND CEMENT CONCRETE SURFACE.
2. USE PARKSON TYLER, APCO OR EQUAL DEEP SKIRTED LID (4" OR MORE) TYPE, SLIDING ADJUSTABLE CAST IRON VALVE BOX C.I. MIN. T.S. 30,000 P.S.I.
3. GROUND BELOW CONCRETE PAD TO BE COMPACTED 95% MAXIMUM DENSITY.
4. CUT RISER PIPE TO LENGTH IN FIELD. **CAUTION:** IF EXISTING RISER IS ASBESTOS–CEMENT PIPE (ACP) FOLLOW OSHA GUIDELINES FOR WORKING WITH ACP.

DETAIL NO.				REVISED	DETAIL NO.
391–1	MARICOPA ASSOCIATION of GOVERNMENTS	STANDARD DETAIL ENGLISH	VALVE BOX INSTALLATION AND GRADE ADJUSTMENT	01–01–2015	391–1

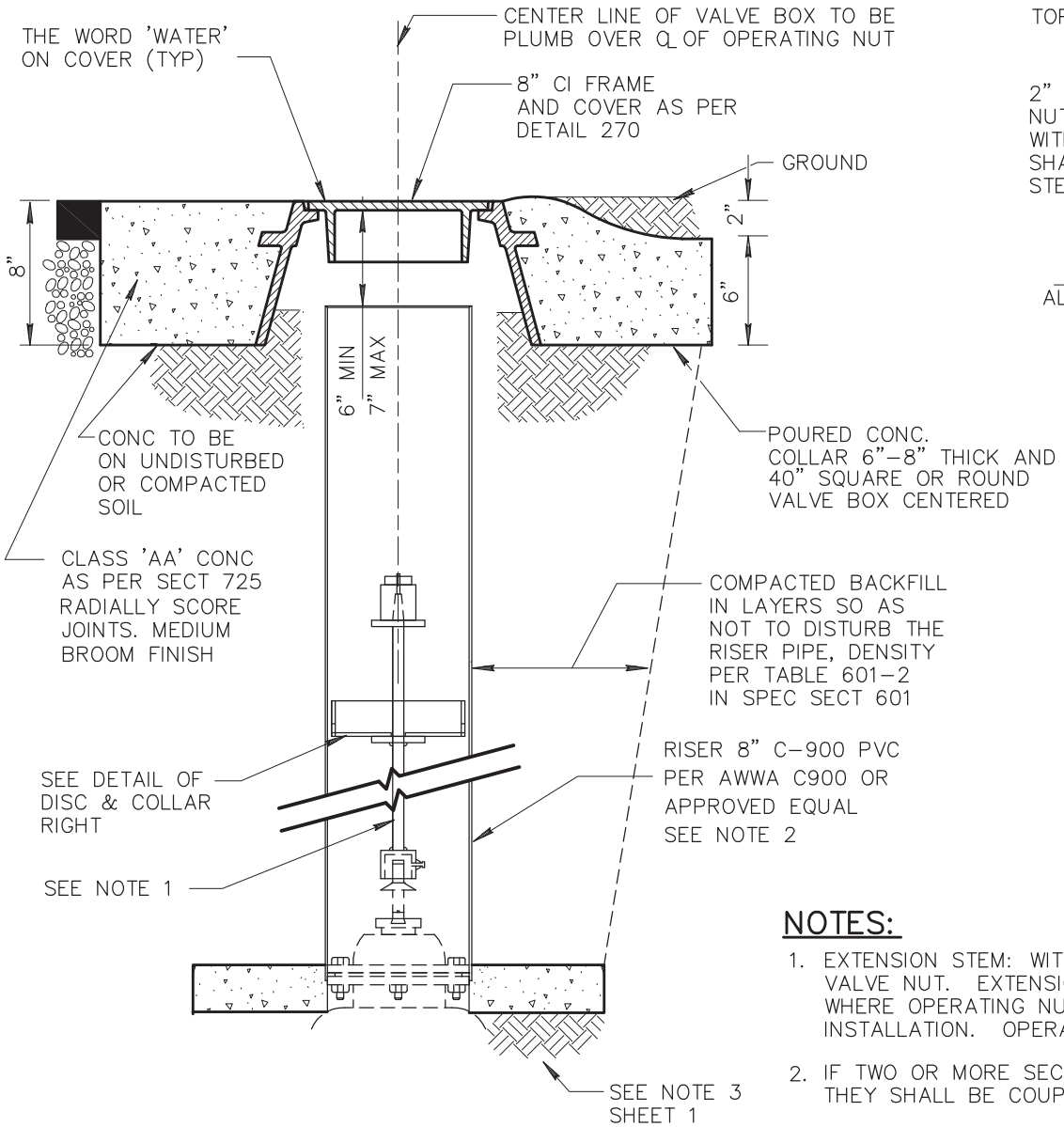

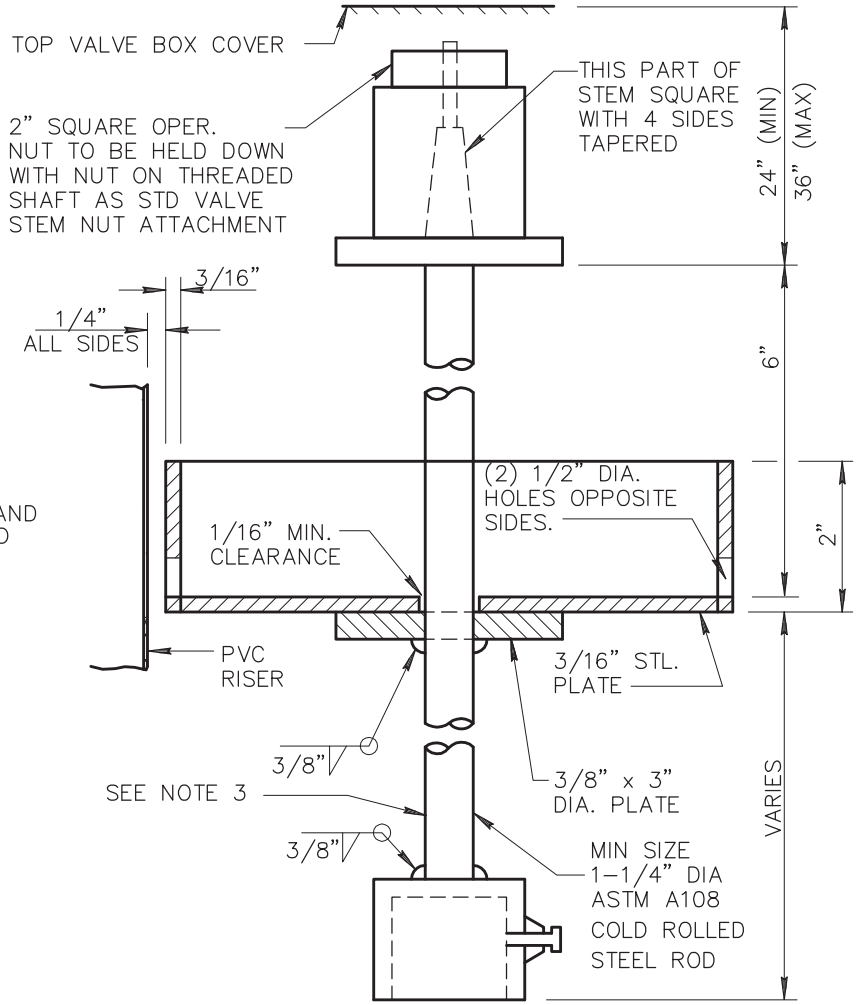

NOTES:

1. EXTENSION STEM: WITH SQUARE SOCKET ON BOTTOM TO FIT 2" SQUARE VALVE NUT. EXTENSION TO VALVE STEMS REQUIRED ON ALL VALVES INSTALLED WHERE OPERATING NUT IS OVER 5' BELOW SURFACE. LENGTH TO FIT EACH INSTALLATION. OPERATING NUT TO BE HELD ON TOP OF EXTENSION WITH STOP NUT.
2. IF TWO OR MORE SECTIONS OF PIPE ARE USED TO MAKE THE VALVE BOX RISER, THEY SHALL BE COUPLED OR BONDED TO FORM DEBRIS–TIGHT JOINTS.
3. STEM PAINTING: ALL STEEL TO HAVE PRIME COAT OF PAINT NO. 1–D AND ONE HEAVY APPLICATION (FINISH COAT) OF PAINT NO. 9 AS PER SECT. 790.

DETAIL NO.				REVISED	DETAIL NO.
391–2	MARICOPA ASSOCIATION of GOVERNMENTS	STANDARD DETAIL ENGLISH	VALVE BOX INSTALLATION AND GRADE ADJUSTMENT	01–01–2015	391–2

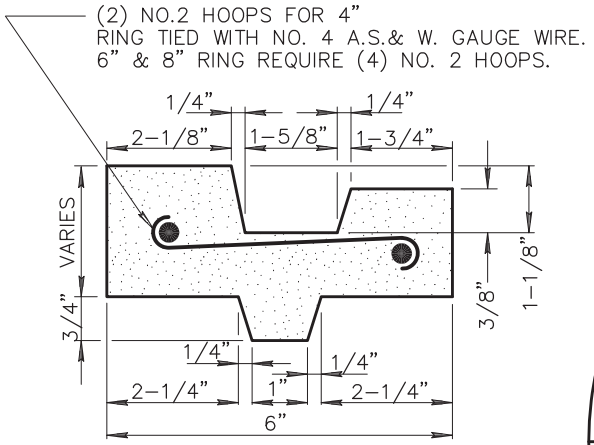

ADJUSTING RING DETAIL

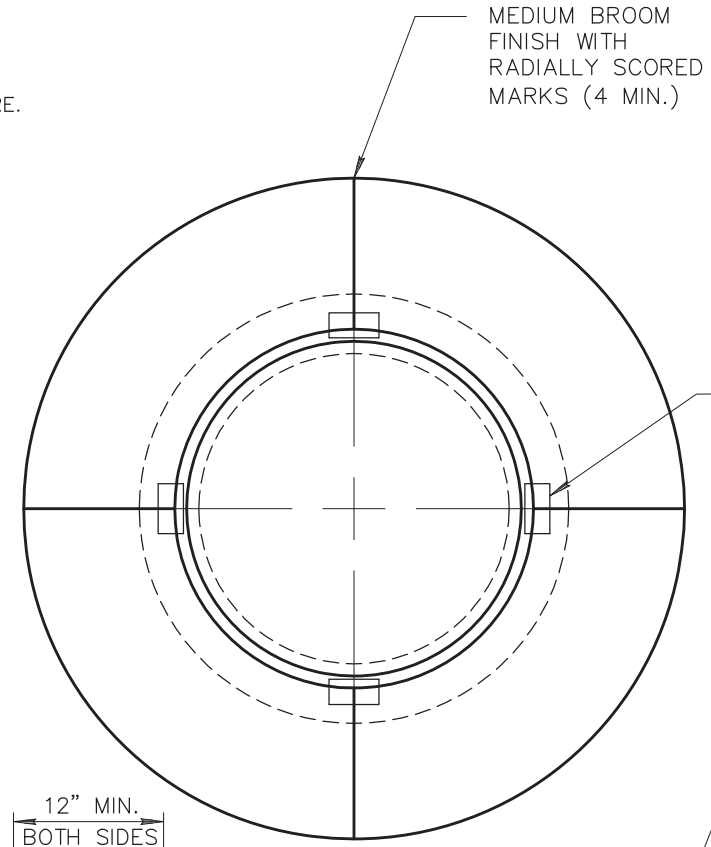

NOTES:

1. CONTRACTORS SHALL ADJUST ALL MANHOLE RINGS AND COVERS, INCLUDING MANHOLES OUTSIDE OF THE PAVEMENT.
2. ADJUSTMENT SHALL BE CONSTRUCTED PER MAG SECTION 345.
3. MANHOLE COATINGS PER AGENCY
4. GROUT SHALL BE USED BETWEEN FRAME AND ADJUSTING RING TO ACHIEVE WATER TIGHTNESS.

SPACER TYPE	REQUIRED THICKNESS
BRICK	GREATER THAN 2"
4"X2" STEEL SPACER	½" TO 2"
GROUT	LESS THAN ½"

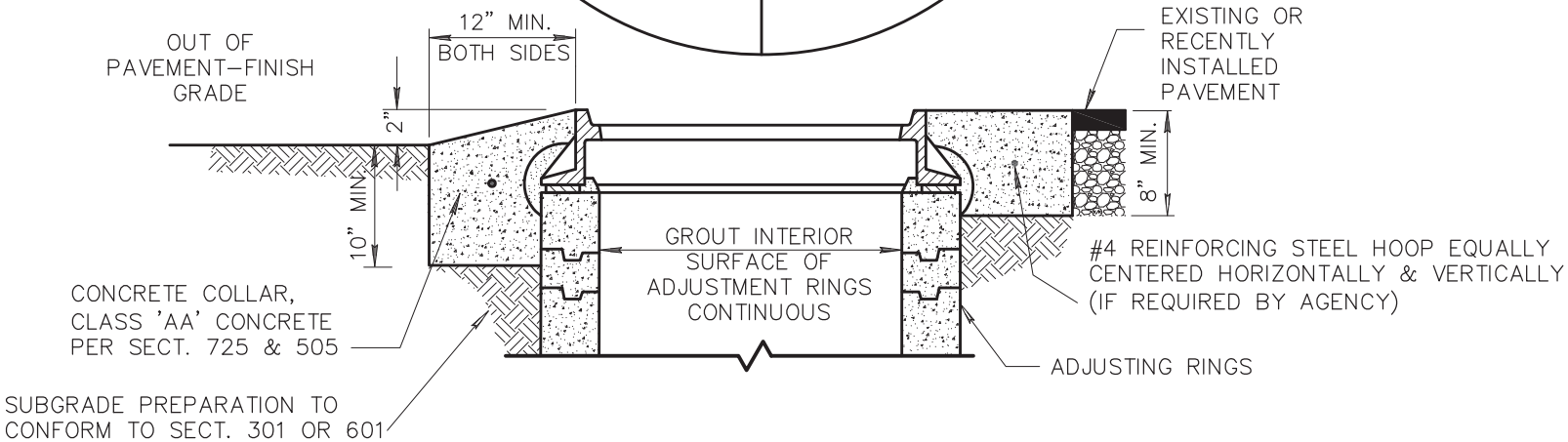

DETAIL NO.		STANDARD DETAIL		REVISED	DETAIL NO.
422	MARICOPA ASSOCIATION of GOVERNMENTS	ENGLISH	MANHOLE FRAME AND COVER ADJUSTMENT	01-01-2015	422

NO	DESCRIPTION OF REVISIONS	MADE BY	DATE
1	REISSUED STANDARD DRAWING	RLF	7/05
2			
3			
4			

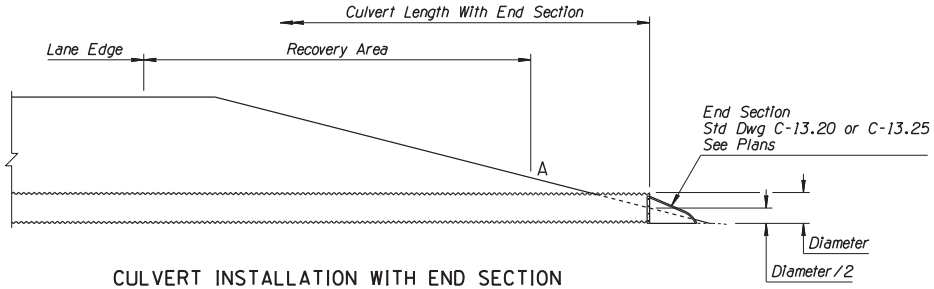

CULVERT INSTALLATION WITH END SECTION

MINIMUM SPACING FOR MULTIPLE PIPES WITH HEADWALL	
Diameter or Span (In)	E (Ft-In)
18	2-6
24	3-0
30	3-9
36	4-6
42	5-3
48 to 66	OD + 3-0
72 and Over	OD + 3-0

GENERAL NOTES

1. See plans for any required inlet and/or outlet protection.
2. E dimension applies to both non-trench and trench conditions.
3. Minimum cover over pipe culverts shall be 1', measured from the top of pipe.
4. See Pipe Berm Requirement Detail for pipe berm requirements and Std Dwg C-03.10 for installation. If Point A is within the recovery area, then a pipe berm is required and Point B is set at the edge of the recovery area.
5. Slope plating shall conform to Std Spec 501.

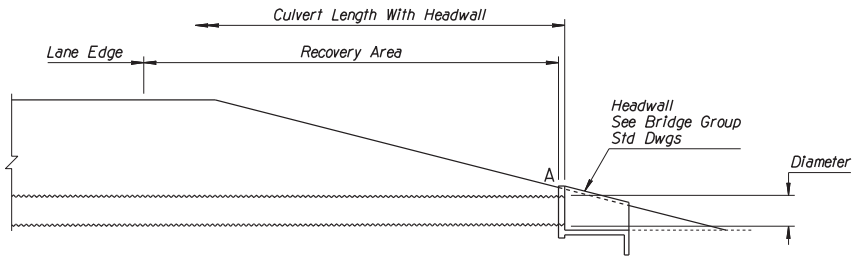

CULVERT INSTALLATION WITH HEADWALL

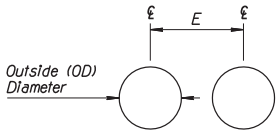

MINIMUM SPACING FOR
MULTIPLE PIPES WITH HEADWALL

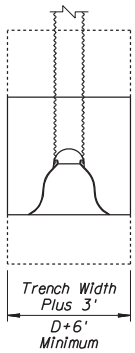

PLAN

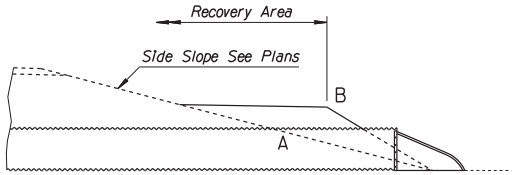

PIPE WITH BERM REQUIREMENT DETAIL

See General Note 4

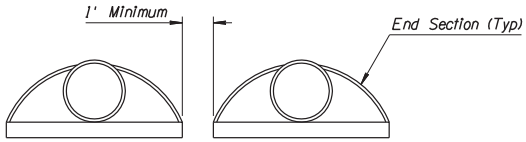

MINIMUM SPACING FOR
MULTIPLE PIPES WITH END SECTIONS

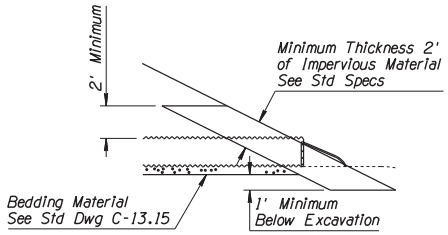

ELEVATION

SLOPE PLATING FOR PIPE
WITH END SECTIONS

APPROVED FOR DESIGN	STATE OF ARIZONA DEPARTMENT OF TRANSPORTATION ROADWAY STANDARD DRAWINGS	REV. 1 5/12
APPROVED FOR DISTRIBUTION	PIPE CULVERT INSTALLATION	DRAWING NO. C-13.10 Sheet 1 of 2

NO	DESCRIPTION OF REVISIONS	MADE BY	DATE
1	NEW GENERAL NOTE 2	RLF	9/04
2			
3			
4			

GENERAL NOTES

1. Minimum cover over pipe culverts shall be 12", measured from the top of pipe.
2. (1) After welding, the damaged coating shall be cleaned by a wire brush and painted with at least one full coat of Paint Number 4, or given two coats of an approved hot asphalt paint, as directed by the Engineer.

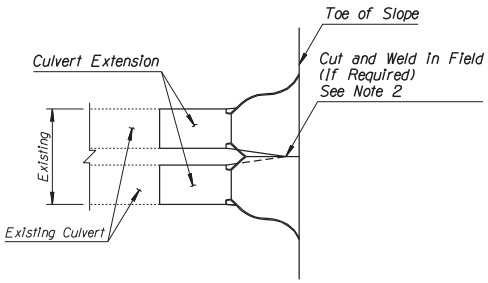

SPECIAL MULTIPLE PIPE END SECTION DETAIL
FOR PIPE CULVERT EXTENSIONS ONLY

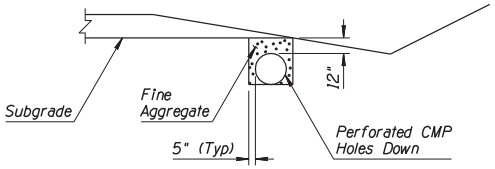

PERFORATED CMP INSTALLATION

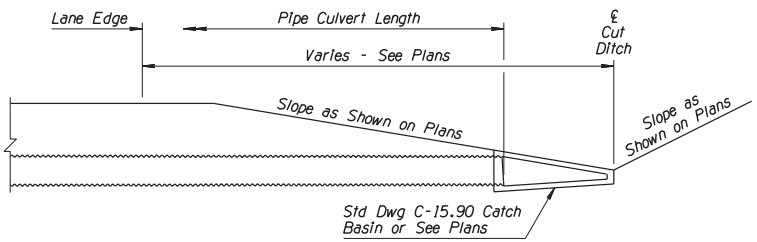

PIPE AND CATCH BASIN INSTALLATION
AT SAG CONDITION OF CUT DITCH

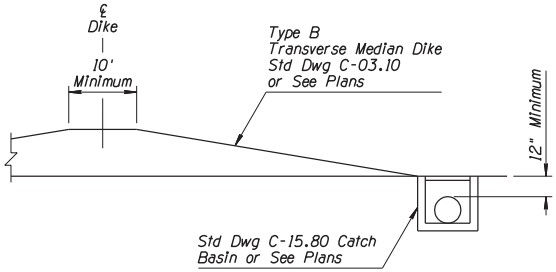

PIPE AND CATCH BASIN INSTALLATION
AT BASE OF TRANSVERSE DIKE

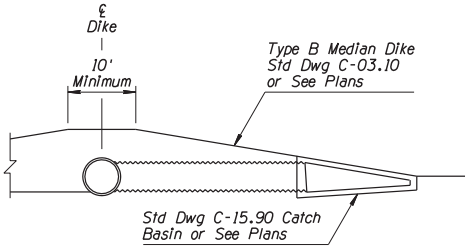

PIPE AND CATCH BASIN INSTALLATION
AT FACE OF TRANSVERSE DIKE

APPROVED FOR DESIGN	STATE OF ARIZONA DEPARTMENT OF TRANSPORTATION ROADWAY STANDARD DRAWINGS	REV. 5/12
APPROVED FOR DISTRIBUTION	PIPE CULVERT INSTALLATION	DRAWING NO. C-13.10 Sheet 2 of 2

NO	DESCRIPTION OF REVISIONS	MADE BY	DATE
1	REVISED SPECIFICATIONS	RLF	9/04
2			
3			
4			

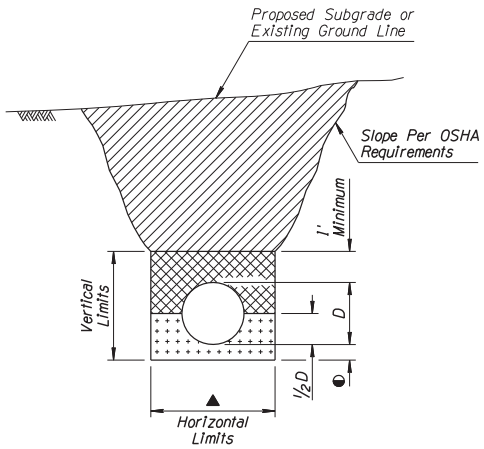

TRENCH CONDITION
IN NATURAL GROUND OR IN EMBANKMENT
WITHOUT BRACING

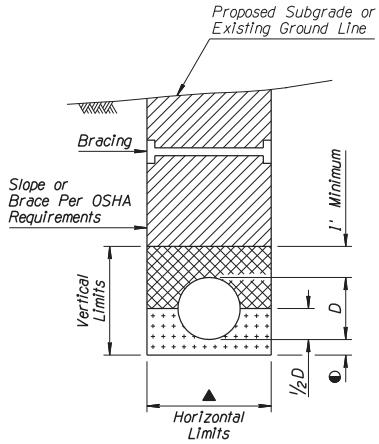

TRENCH CONDITION
IN NATURAL GROUND OR IN EMBANKMENT
WITH BRACING SHOWN

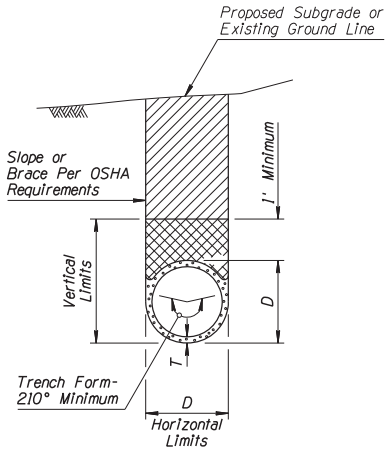

TRENCH CONDITION
NRCIPCP IN NATURAL GROUND
OR IN EMBANKMENT

GENERAL NOTES

1. Pipes shall be installed either in a trench condition or in a non-trench condition in natural ground or in embankment.
2. In a trench condition, the vertical and horizontal limits shall be maintained. If horizontal limits are exceeded or the vertical limits are not maintained, a non-trench condition exists.
3. Bracing and sloping shall conform to OSHA requirements.
4. Pipe backfill may be bedding material.
5. In a non-trench condition, the embankment for pipe stability shall be constructed in lifts to the limits shown in the detail simultaneously with the bedding material and pipe backfill. If the contractor chooses to construct it as a trench condition, the embankment shall be constructed before excavating the trench.

D - Outside diameter of full circle pipe or outside dimension (span or rise) of arch, arch pipe, elliptical pipe.

T - Minimum wall thickness for NRCIPCP: See Plans.

(1) ▲ For D< than 4': D + 6" each side, minimum
D + 2' each side, maximum

(1) For D≥ than 4': D + 1' each side, minimum
D + 3' each side, maximum

◐ - 6 inches except when on unyielding or unstable material. See Std Specs.

TRENCH BACKFILL

PIPE BACKFILL

BEDDING

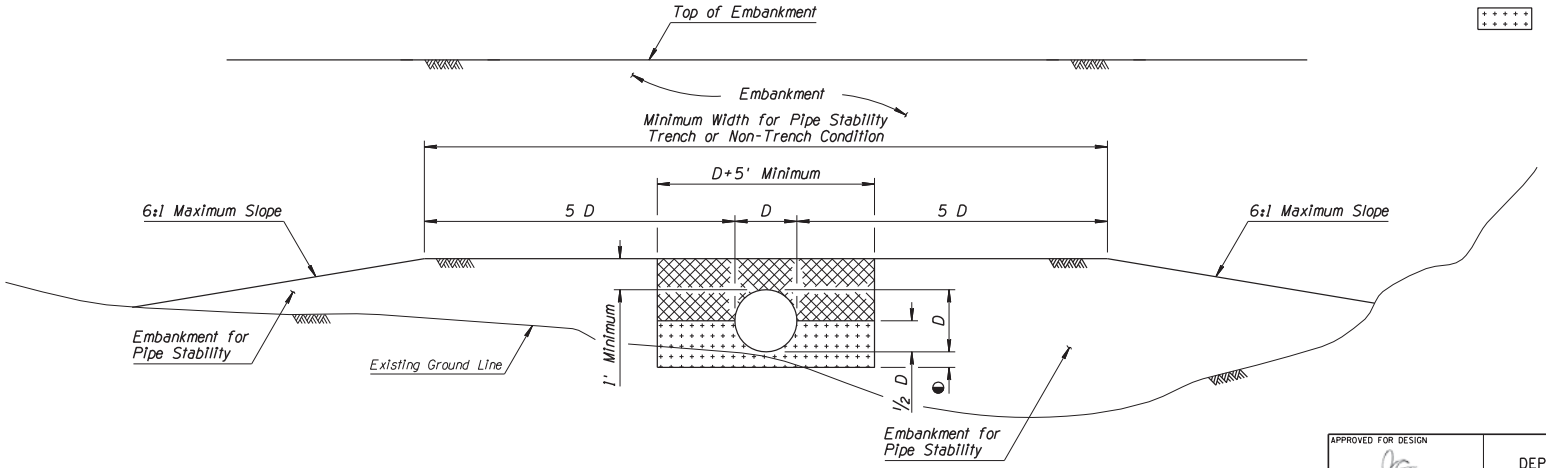

NON-TRENCH CONDITION

APPROVED FOR DESIGN	STATE OF ARIZONA DEPARTMENT OF TRANSPORTATION ROADWAY STANDARD DRAWINGS	REV. 5/12
APPROVED FOR DISTRIBUTION	TYPICAL PIPE INSTALLATION	DRAWING NO. C-13.15

APPENDIX B

(PROJECT PLANS)

IMPROVEMENT PLANS FOR

MESA DEL CABALLO SUBDIVISION ROADS

PROJECT LOCATION

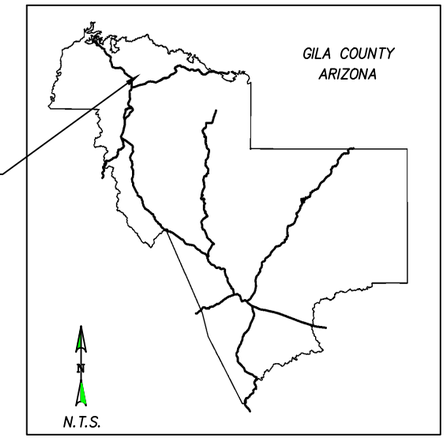

PROJECT SITE

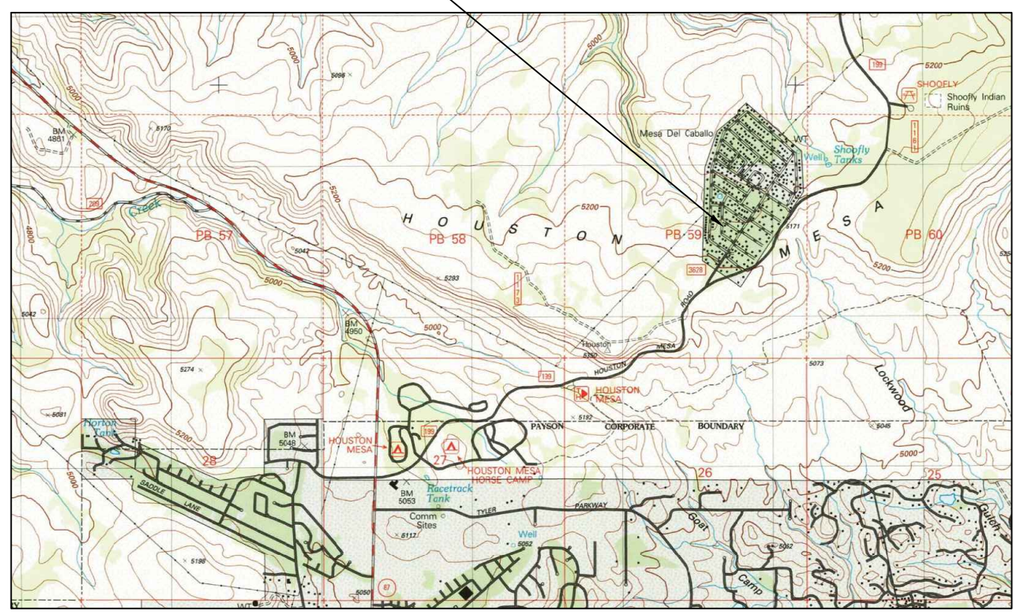

VICINITY MAP SECTION 23, TOWNSHIP 11N, RANGE 10E N.T.S.

GILA COUNTY BOARD OF SUPERVISORS

CHAIRMAN	MICHAEL A. PASTOR	DISTRICT II
VICE CHAIRMAN	TOMMIE CLINE MARTIN	DISTRICT I
MEMBER	JOHN D. MARCANTI	DISTRICT III

COUNTY MANAGER
DON E. MCDANIEL JR.

PUBLIC WORKS DIVISION DIRECTOR
STEVE SANDERS

INDEX OF SHEETS

SHEET NO.	SHEET TYPE	DWG NO.
SHEET 1	COVER	C1
SHEET 2	TYPICAL SECT. & DESIGN	T1
SHEET 3	GEOMETRIC SHEET	G1
SHEET 4–6	PLAN SHEETS	P1–P3
SHEET 7–9	PROFILE SHEETS	PR1–PR3
SHEET 10–15	DETAIL SHEETS	D1–D6

GILA COUNTY CONTACT

ATTN: MARK GUERENA, COUNTY ENGINEER
GILA COUNTY PUBLIC WORKS DIVISION
745 NORTH ROSE MOFFORD WAY
GLOBE, ARIZONA 85501
PH: 928-402-8507

GILA COUNTY PUBLIC WORKS DIVISION		
MESA DEL CABALLO		
COVER SHEET		
DRAWN BY: MCG	DATE: 10-22-2015	DWG NO. C1
SCALE: N.T.S.	JOB NO. GC2014-02	

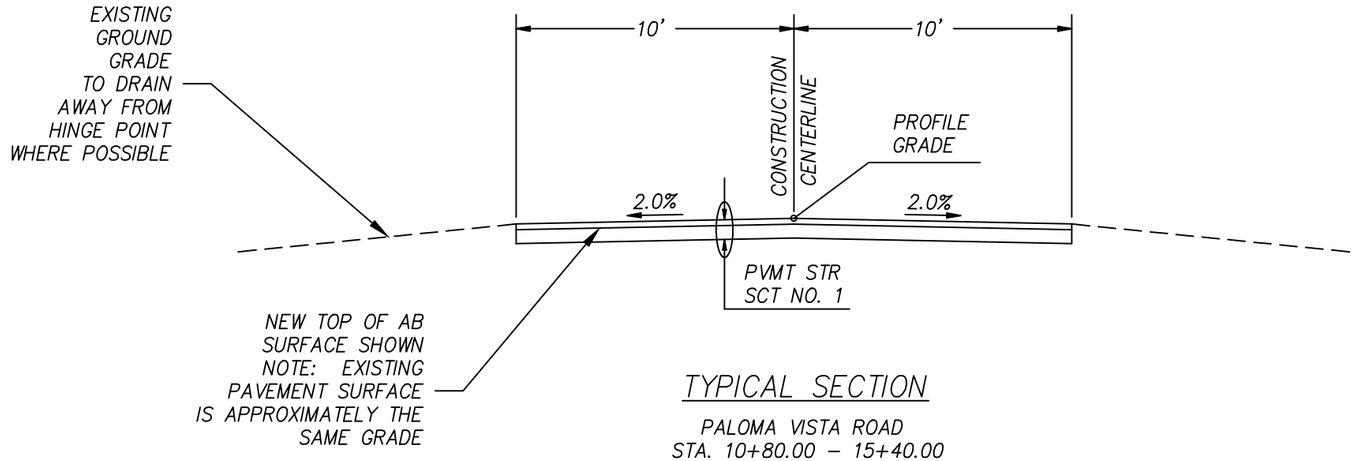

TYPICAL SECTION

PALOMA VISTA ROAD
STA. 10+80.00 – 15+40.00
STA. 16+50.00 – 18+50.00

SEPIA ROAD
STA. 30+80.00 – 34+00.00

BARRANCA ROAD
STA. 50+80.00 – 55+65.00
STA. 57+05.44 – 58+10.00

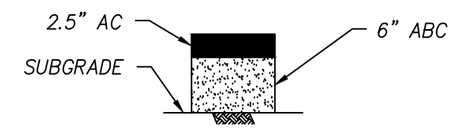

PAVEMENT STRUCTURAL SECTION NO. 1

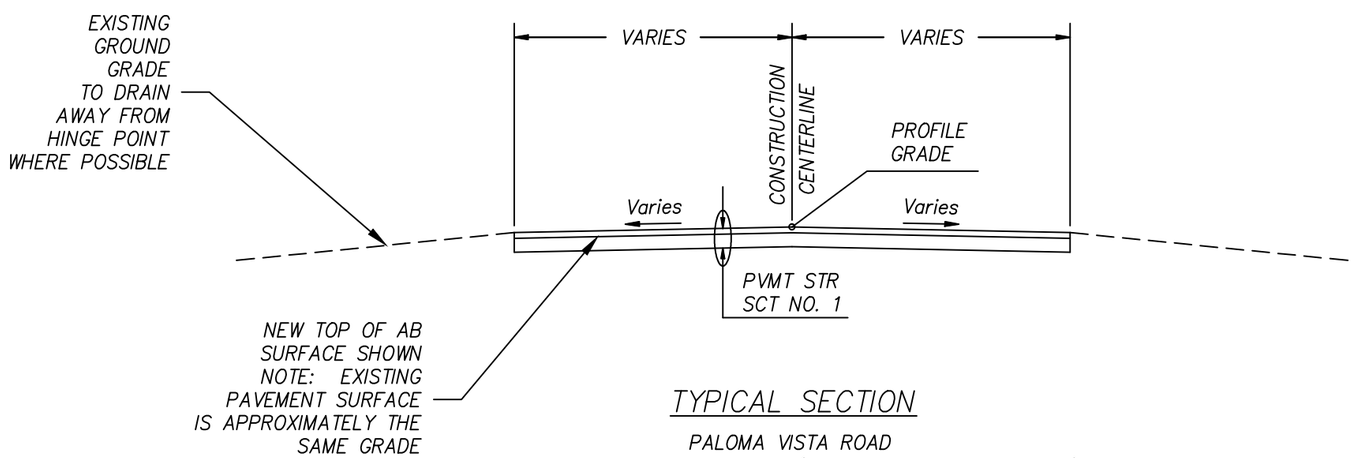

TYPICAL SECTION

PALOMA VISTA ROAD
STA. 10+10.00 – 10+80.00 (SEE DETAIL F, DWG NO. D6)
STA. 15+40.00 – 16+50.00 (SEE DETAIL C, DWG NO. D3)
STA. 18+50.00 – 19+26.78 (SEE DETAIL B, DWG NO. D2)

SEPIA ROAD
STA. 30+10.00 – 30+80.00 (SEE DETAIL E, DWG NO. D5)
STA. 34+00.00 – 34+84.32 (SEE DETAIL C, DWG NO. D3)

BARRANCA ROAD
STA. 50+10.00 – 50+80.00 (SEE DETAIL D, DWG NO. D4)
STA. 55+65.00 – 57+05.44 (SEE DETAIL B, DWG NO. D2)
STA. 58+10.00 – 59+01.51 (SEE DETAIL A, DWG NO. D1)

GILA COUNTY PUBLIC WORKS DIVISION		
MESA DEL CABALLO		
TYPICAL SECTION/DESIGN SHEET		
DRAWN BY: MCG	DATE: 05-27-2014	DWG NO. T1
SCALE:	JOB NO. GC2014-02	SHEET 1 OF 1

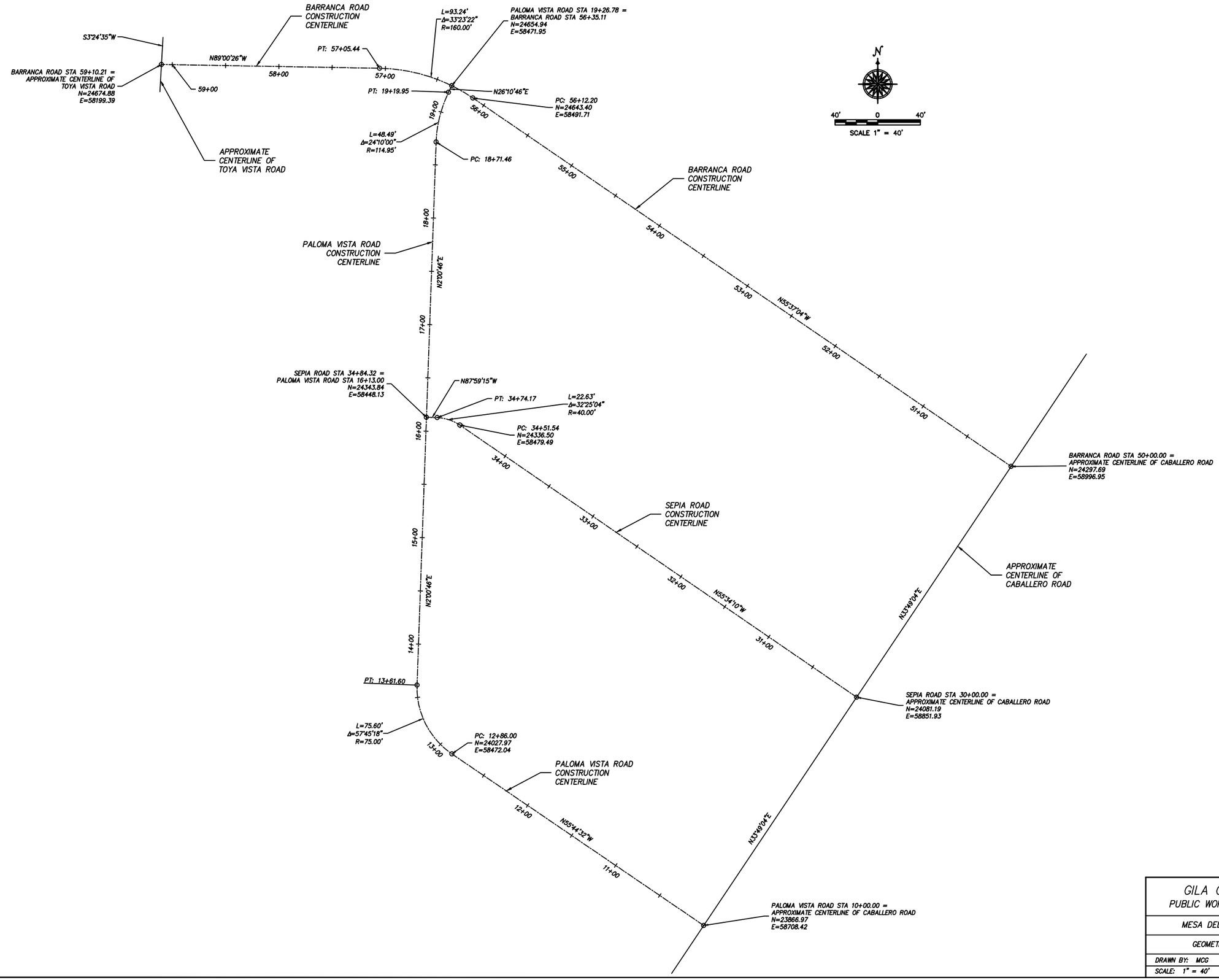

GILA COUNTY PUBLIC WORKS DIVISION		
MESA DEL CABALLO		
GEOMETRIC SHEET		
DRAWN BY: MCG	DATE: 05-27-2014	DWG NO. G1
SCALE: 1" = 40'	JOB NO. GC2014-02	SHEET 1 OF 1

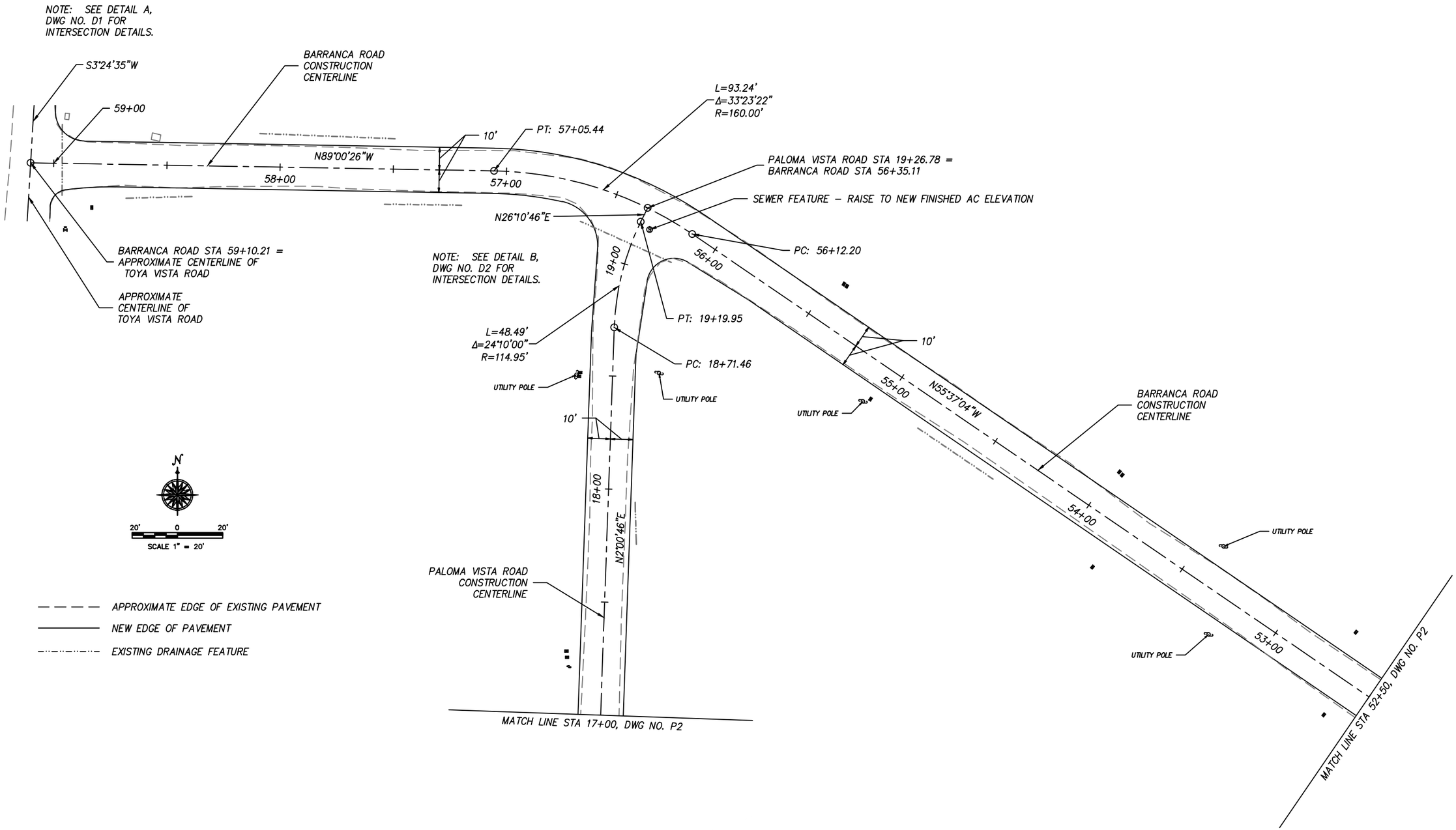

GILA COUNTY PUBLIC WORKS DIVISION		
MESA DEL CABALLO		
PLAN SHEET		
DRAWN BY: MCG	DATE: 05-27-2014	DWG NO. P1
SCALE: 1" = 20'	JOB NO. GC2014-02	SHEET 1 OF 3

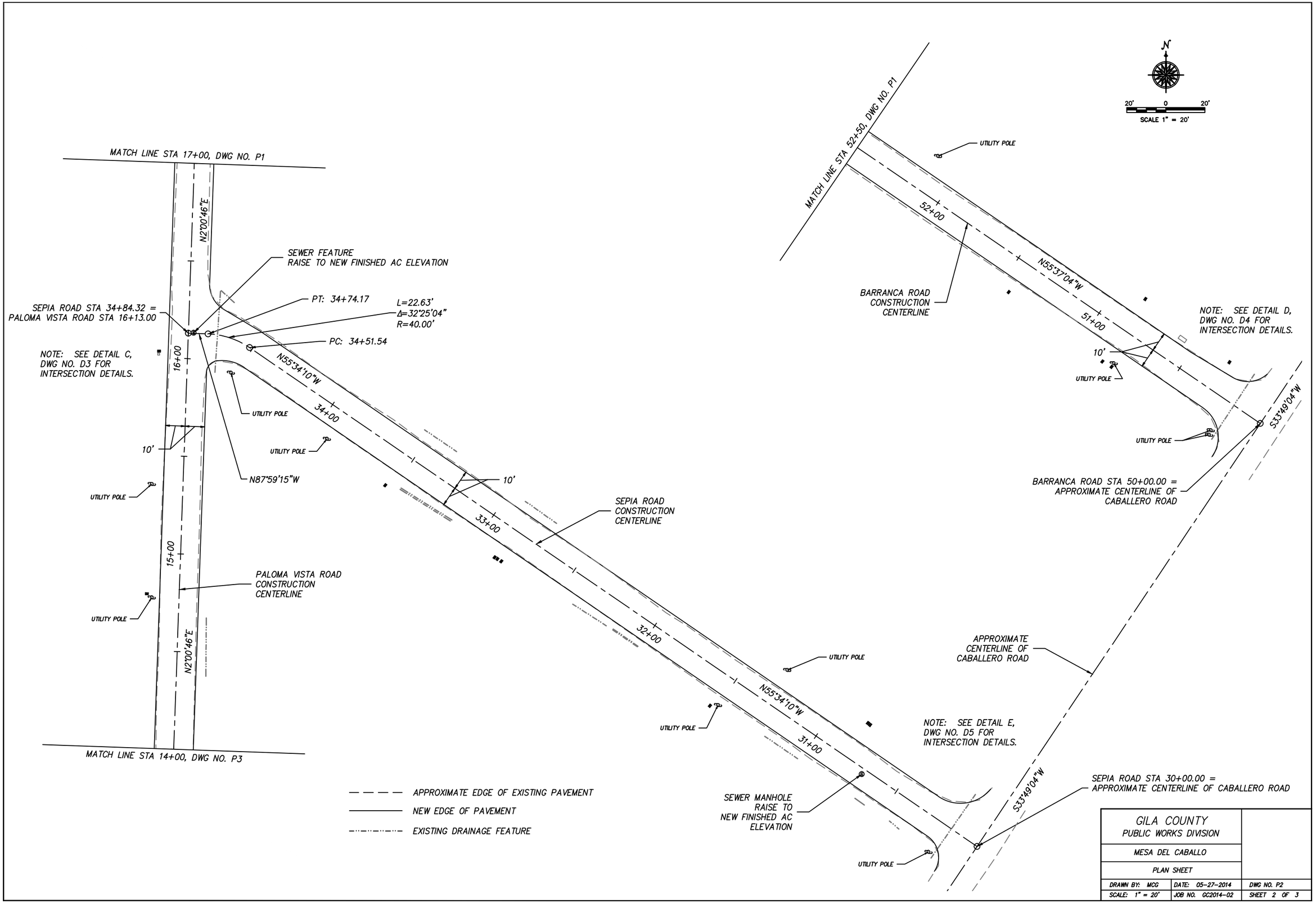
MATCH LINE STA 17+00, DWG NO. P1
N2°00'46"E
SEWER FEATURE
RAISE TO NEW FINISHED AC ELEVATION
SEPIA ROAD STA 34+84.32 =
PALOMA VISTA ROAD STA 16+13.00
PT: 34+74.17
L=22.63'
Δ=32°25'04"
R=40.00'
PC: 34+51.54
NOTE: SEE DETAIL C,
DWG NO. D3 FOR
INTERSECTION DETAILS.
16+00
N55°34'10"W
34+00
UTILITY POLE
10'
N87°59'15"W
15+00
PALOMA VISTA ROAD
CONSTRUCTION
CENTERLINE
33+00
SEPIA ROAD
CONSTRUCTION
CENTERLINE
32+00
31+00
MATCH LINE STA 14+00, DWG NO. P3
APPROXIMATE EDGE OF EXISTING PAVEMENT
NEW EDGE OF PAVEMENT
EXISTING DRAINAGE FEATURE
SEWER MANHOLE
RAISE TO
NEW FINISHED AC
ELEVATION
MATCH LINE STA 52+50, DWG NO. P1
52+00
51+00
BARRANCA ROAD
CONSTRUCTION
CENTERLINE
NOTE: SEE DETAIL D,
DWG NO. D4 FOR
INTERSECTION DETAILS.
S33°49'04"W
BARRANCA ROAD STA 50+00.00 =
APPROXIMATE CENTERLINE OF
CABALLERO ROAD
APPROXIMATE
CENTERLINE OF
CABALLERO ROAD
NOTE: SEE DETAIL E,
DWG NO. D5 FOR
INTERSECTION DETAILS.
SEPIA ROAD STA 30+00.00 =
APPROXIMATE CENTERLINE OF CABALLERO ROAD
N
20' 0 20'
SCALE 1" = 20'
GILA COUNTY
PUBLIC WORKS DIVISION
MESA DEL CABALLO
PLAN SHEET
DRAWN BY: MCG
DATE: 05-27-2014
DWG NO. P2
SCALE: 1" = 20'
JOB NO. GC2014-02
SHEET 2 OF 3

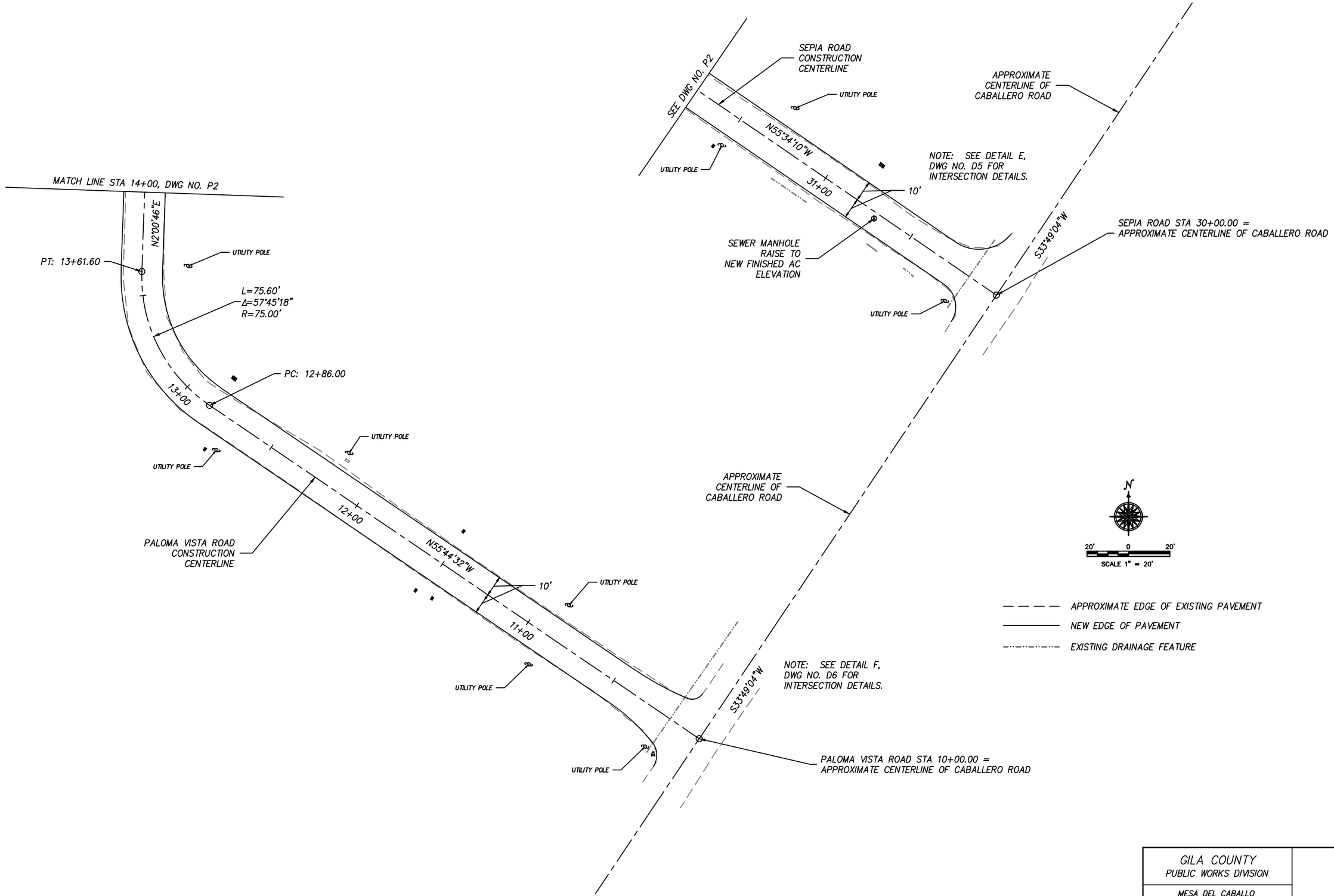

GILA COUNTY PUBLIC WORKS DIVISION		
MESA DEL CABALLO		
PLAN SHEET		
DRAWN BY: MCG	DATE: 05-27-2014	DWG NO. P3
SCALE: 1" = 20'	JOB NO. GC2014-02	SHEET 3 OF 3

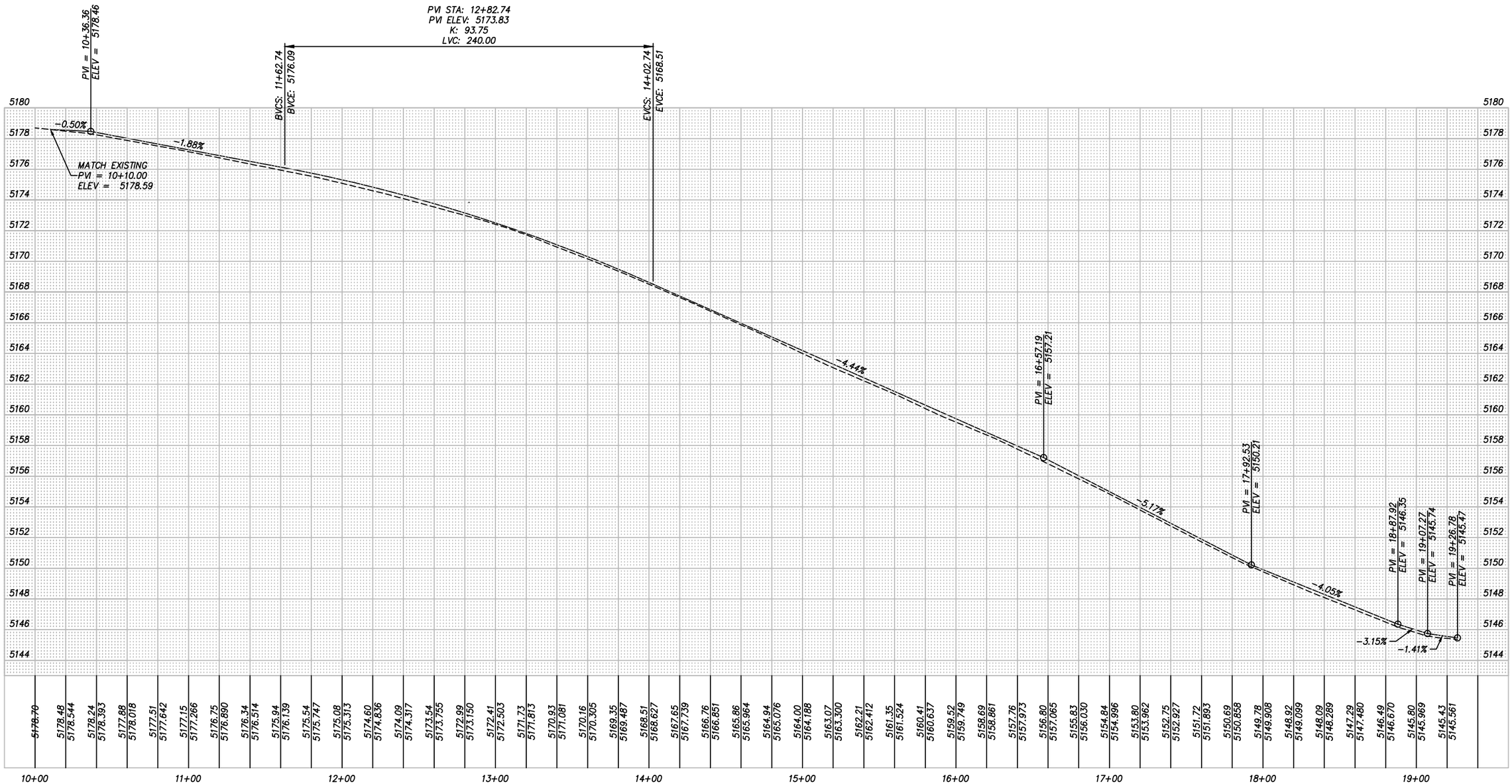

Alignment – Paloma Vista PROFILE

----- EXISTING GROUND
——— FINISHED GRADE LINE

GILA COUNTY PUBLIC WORKS DIVISION		
MESA DEL CABALLO		
PALOMA VISTA PROFILE		
DRAWN BY: MCG	DATE: 05-27-2014	DWG NO. PR1
SCALE:	JOB NO. GC2014-02	SHEET 1 OF 3

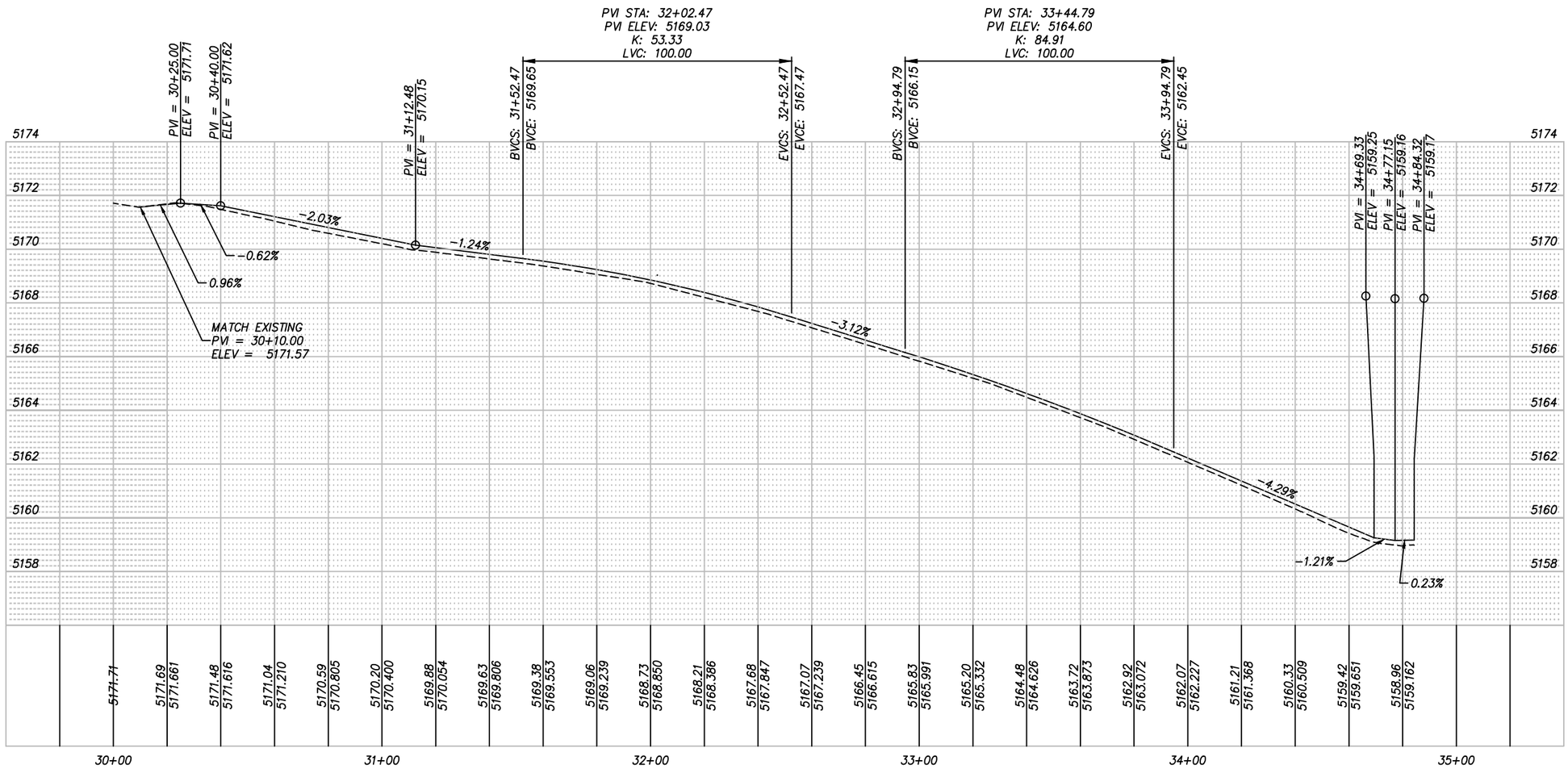

Alignment – Sepia PROFILE

---- EXISTING GROUND
——— FINISHED GRADE LINE

GILA COUNTY PUBLIC WORKS DIVISION		
MESA DEL CABALLO		
SEPIA PROFILE		
DRAWN BY: MCG	DATE: 05-27-2014	DWG NO. PR2
SCALE:	JOB NO. GC2014-02	SHEET 2 OF 3

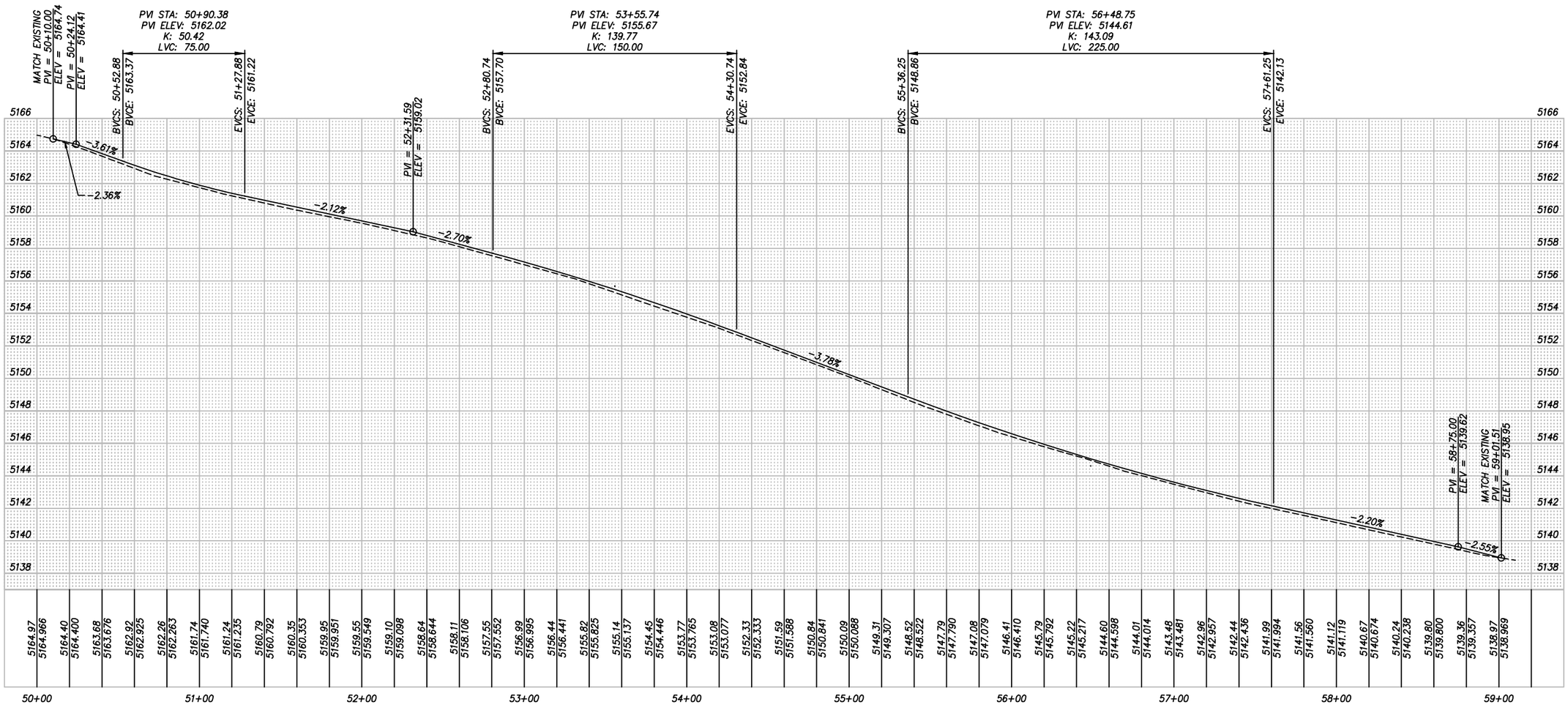

Alignment – Barranca PROFILE

----- EXISTING GROUND
——— FINISHED GRADE LINE

GILA COUNTY PUBLIC WORKS DIVISION		
MESA DEL CABALLO		
BARRANCA PROFILE		
DRAWN BY: MCG	DATE: 05-27-2014	DWG NO. PR3
SCALE:	JOB NO. GC2014-02	SHEET 3 OF 3

CULVERT INFORMATION

U/S	D/S
N 24660.198	N 24692.198
E 58213.277	E 58213.377
ELV. 5136.97	ELV. 5135.66

SLOPE 0.0409 ft./ft.

INSTALL 32 L.F. OF 21X15-INCH CMPA PER ADOT STD. DTL. C-13.10 & C-13.15

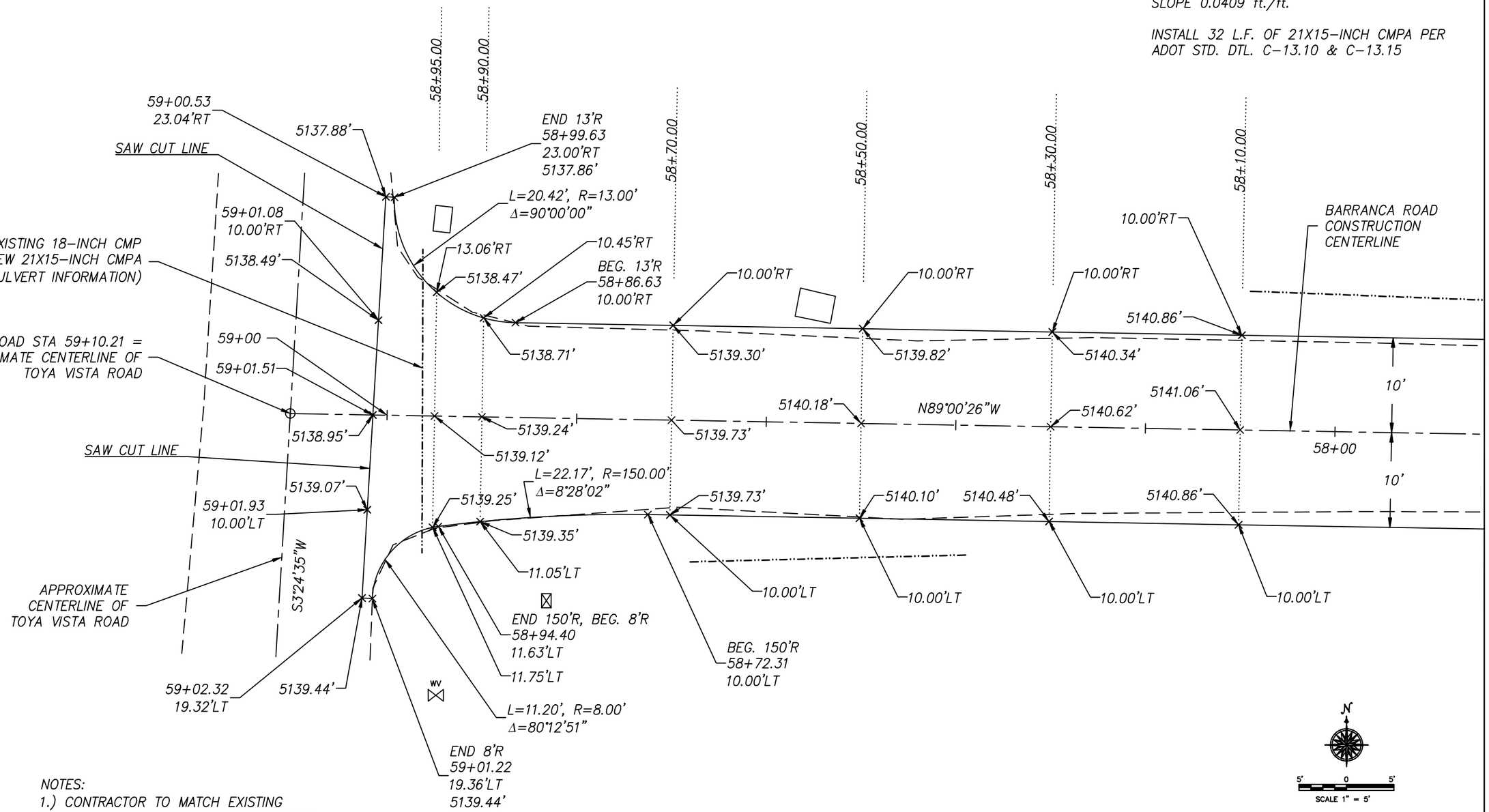

NOTES:

1.) CONTRACTOR TO MATCH EXISTING PAVEMENT AT THE SAW CUT LINE SHOWN. EXISTING PAVEMENT ELEVATIONS ARE SHOWN AT THIS LOCATION. ALL OTHER ELEVATIONS SHOWN ARE FOR THE FINAL PAVEMENT SURFACE.

2.) SEE PROFILE SHEET PR3 (BARRANCA) FOR CENTERLINE ELEVATIONS.

— — — APPROXIMATE EDGE OF EXISTING PAVEMENT

——— NEW EDGE OF PAVEMENT

—·—·— DRAINAGE FEATURE

GILA COUNTY PUBLIC WORKS DIVISION		
MESA DEL CABALLO		
DETAIL A BARRANCA/TOYA VISTA INTERSECTION		
DRAWN BY: MCG	DATE: 02-03-2015	DWG NO. D1
SCALE: 1" = 5'	JOB NO. GC2014-02	SHEET 1 OF 6

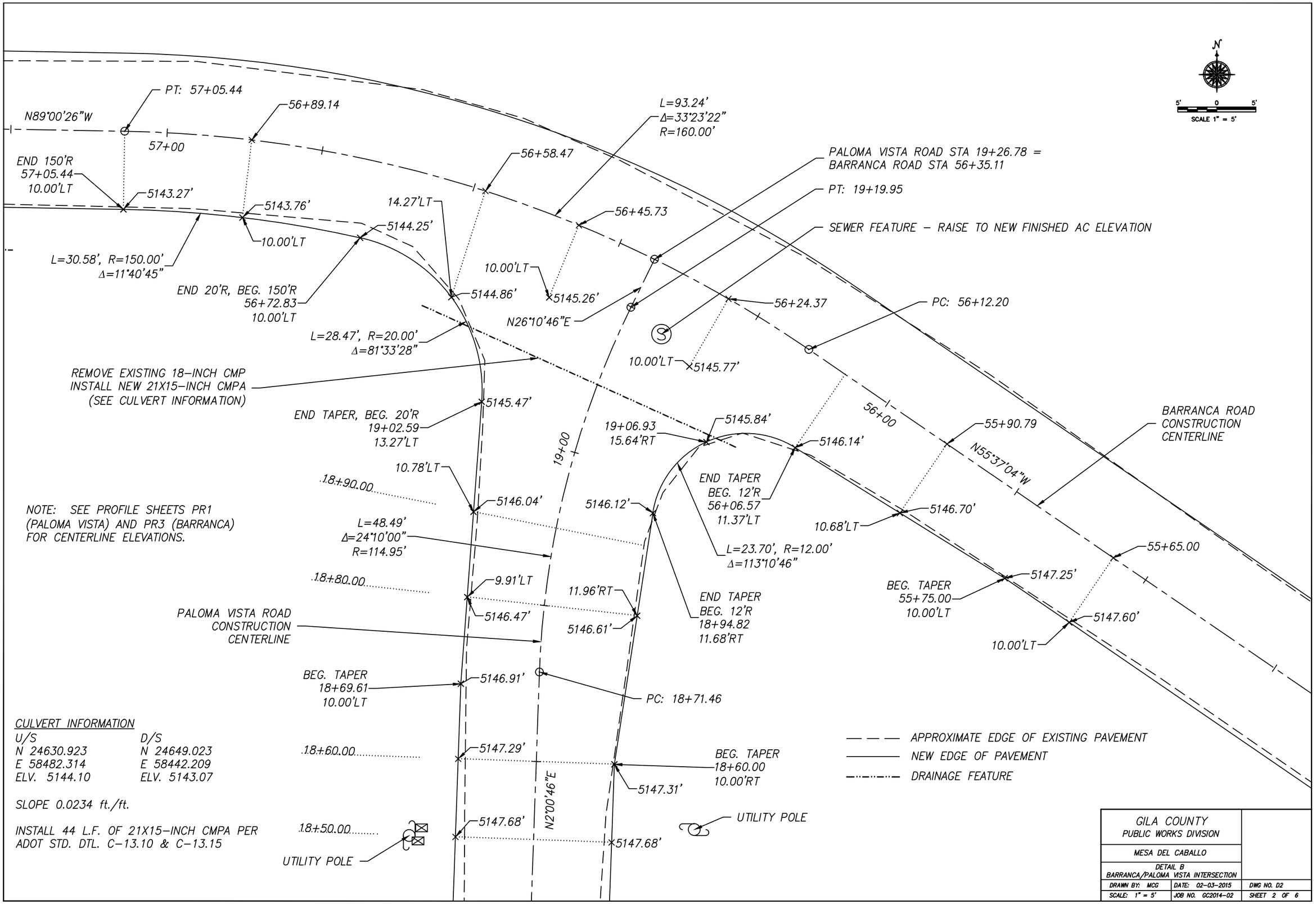
N
5' 0 5'
SCALE 1" = 5'
PT: 57+05.44
N89°00'26"W
56+89.14
57+00
END 150'R
57+05.44
10.00'LT
5143.27'
5143.76'
10.00'LT
L=30.58', R=150.00'
Δ=11°40'45"
14.27'LT
5144.25'
END 20'R, BEG. 150'R
56+72.83
10.00'LT
5144.86'
L=28.47', R=20.00'
Δ=81°33'28"
REMOVE EXISTING 18-INCH CMP
INSTALL NEW 21X15-INCH CMPA
(SEE CULVERT INFORMATION)
END TAPER, BEG. 20'R
19+02.59
13.27'LT
5145.47'
10.78'LT
18+90.00
5146.04'
L=48.49'
Δ=24°10'00"
R=114.95'
18+80.00
9.91'LT
5146.47'
PALOMA VISTA ROAD
CONSTRUCTION
CENTERLINE
BEG. TAPER
18+69.61
10.00'LT
5146.91'
18+60.00
5147.29'
N2°00'46"E
5147.68'
UTILITY POLE
19+00
56+58.47
10.00'LT
5145.26'
N26°10'46"E
56+45.73
L=93.24'
Δ=33°23'22"
R=160.00'
PALOMA VISTA ROAD STA 19+26.78 =
BARRANCA ROAD STA 56+35.11
PT: 19+19.95
SEWER FEATURE – RAISE TO NEW FINISHED AC ELEVATION
56+24.37
PC: 56+12.20
10.00'LT
5145.77'
19+06.93
15.64'RT
5145.84'
5146.14'
END TAPER
BEG. 12'R
56+06.57
11.37'LT
L=23.70', R=12.00'
Δ=113°10'46"
5146.12'
11.96'RT
5146.61'
END TAPER
BEG. 12'R
18+94.82
11.68'RT
PC: 18+71.46
BEG. TAPER
18+60.00
10.00'RT
5147.31'
5147.68'
UTILITY POLE
56+00
55+90.79
N55°37'04"W
BARRANCA ROAD
CONSTRUCTION
CENTERLINE
10.68'LT
5146.70'
55+65.00
BEG. TAPER
55+75.00
10.00'LT
5147.25'
5147.60'
10.00'LT
NOTE: SEE PROFILE SHEETS PR1
(PALOMA VISTA) AND PR3 (BARRANCA)
FOR CENTERLINE ELEVATIONS.
CULVERT INFORMATION
U/S
N 24630.923
E 58482.314
ELV. 5144.10
D/S
N 24649.023
E 58442.209
ELV. 5143.07
SLOPE 0.0234 ft./ft.
INSTALL 44 L.F. OF 21X15-INCH CMPA PER
ADOT STD. DTL. C-13.10 & C-13.15
APPROXIMATE EDGE OF EXISTING PAVEMENT
NEW EDGE OF PAVEMENT
DRAINAGE FEATURE
GILA COUNTY
PUBLIC WORKS DIVISION
MESA DEL CABALLO
DETAIL B
BARRANCA/PALOMA VISTA INTERSECTION
DRAWN BY: MCG
DATE: 02-03-2015
DWG NO. D2
SCALE: 1" = 5'
JOB NO. GC2014-02
SHEET 2 OF 6

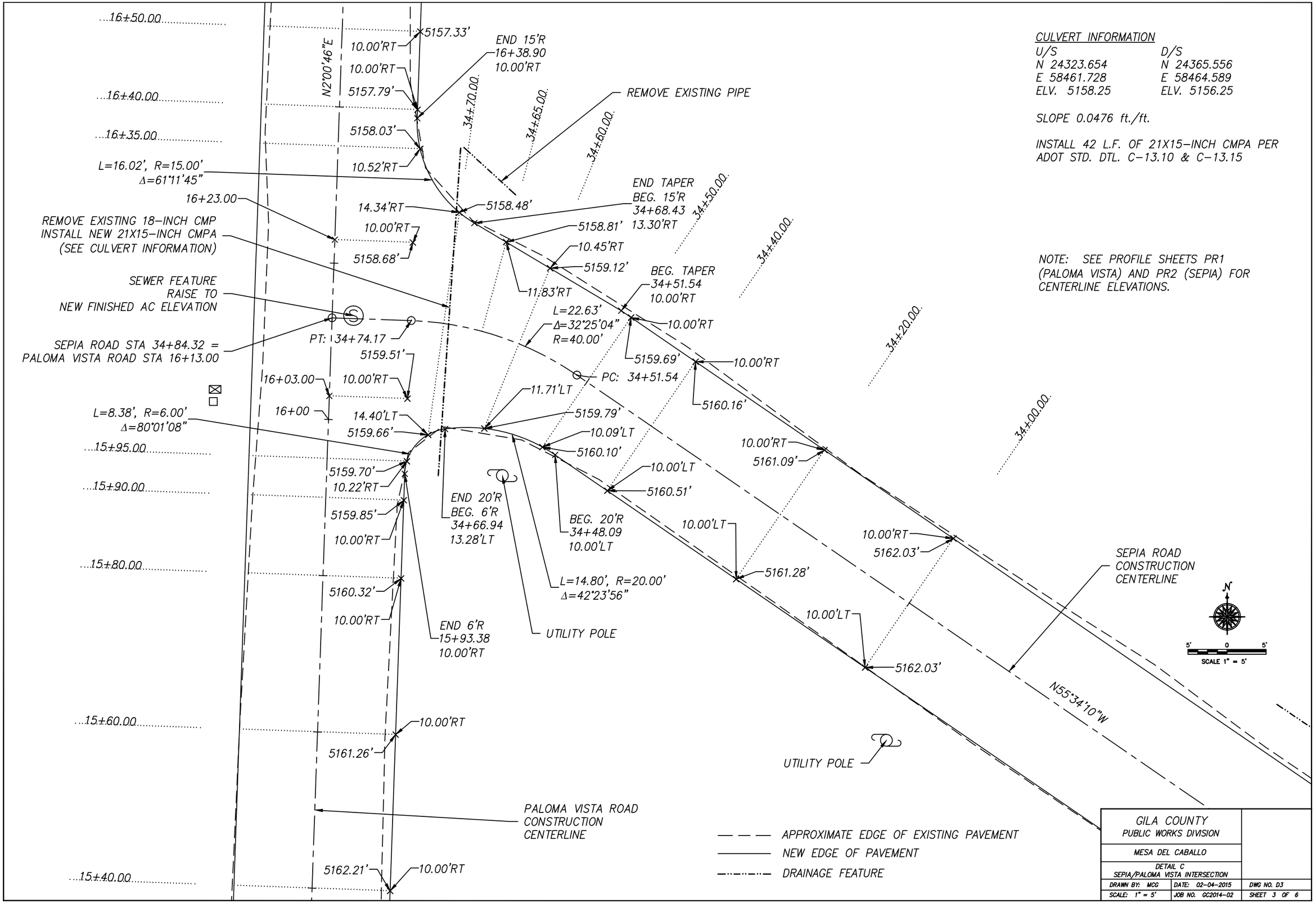

CULVERT INFORMATION

U/S	D/S
N 24323.654	N 24365.556
E 58461.728	E 58464.589
ELV. 5158.25	ELV. 5156.25

SLOPE 0.0476 ft./ft.

INSTALL 42 L.F. OF 21X15-INCH CMPA PER ADOT STD. DTL. C-13.10 & C-13.15

NOTE: SEE PROFILE SHEETS PR1 (PALOMA VISTA) AND PR2 (SEPIA) FOR CENTERLINE ELEVATIONS.

GILA COUNTY PUBLIC WORKS DIVISION		
MESA DEL CABALLO		
DETAIL C SEPIA/PALOMA VISTA INTERSECTION		
DRAWN BY: MCG	DATE: 02-04-2015	DWG NO. D3
SCALE: 1" = 5'	JOB NO. GC2014-02	SHEET 3 OF 6

BARRANCA ROAD CONSTRUCTION CENTERLINE

N55°37'04"W

51+00

10'

10'

50±80.00

50±60.00

50±40.00

50±30.00

50±20.00

50±15.00

5162.26'

10.00'RT

5162.91'

10.00'RT

END TAPER
50+50.00
10.00'RT

10.00'LT

5162.26'

5163.24'

BEG. TAPER, END 15'R
50+24.96
11.45'RT

L=19.03', R=15.00'
Δ=72°40'15"

BEG. 15'R
50+11.27
22.79'RT

5164.30'

10.58'RT

11.16'RT

16.04'RT

50+10.23
22.80'RT

5163.54

5163.85

5164.12

5164.32'

UTILITY POLE

10.00'LT

5163.02'

SAW CUT LINE

5163.79'

12.60'RT

5164.23

10.00'RT

5164.21'

5164.38'

10.00'RT

50+10.10
10.00'RT

10.00'LT

5164.17'

S33°49'04"W

5164.54'

10.00'LT

5164.55'

5164.74'

END 18'R
50+28.73
10.00'LT

10.00'LT

5164.57

50+10.00

12.26'LT

5164.74'

10.00'LT

5164.93'

UTILITY POLE

BARRANCA ROAD STA 50+00.00 =
APPROXIMATE CENTERLINE OF
CABALLERO ROAD

16.35'LT

L=28.10', R=18.00'
Δ=89°26'08"

5164.83

BEG. 18'R
50+10.73
27.82'LT

5165.32'

50+09.90
10.00'LT

5165.30'

50+09.73
27.81'LT

SAW CUT LINE

APPROXIMATE
CENTERLINE OF
CABALLERO ROAD

NOTES:

1.) CONTRACTOR TO MATCH EXISTING PAVEMENT AT THE SAW CUT LINE SHOWN. EXISTING PAVEMENT ELEVATIONS ARE SHOWN AT THIS LOCATION. ALL OTHER ELEVATIONS SHOWN ARE FOR THE FINAL PAVEMENT SURFACE.

2.) SEE PROFILE SHEET PR3 (BARRANCA) FOR CENTERLINE ELEVATIONS.

- - - - - APPROXIMATE EDGE OF EXISTING PAVEMENT

——— NEW EDGE OF PAVEMENT

-·-·-·- EXISTING DRAINAGE FEATURE

N

5' 0 5'

SCALE 1" = 5'

GILA COUNTY PUBLIC WORKS DIVISION		
MESA DEL CABALLO		
DETAIL D BARRANCA/CABALLERO INTERSECTION		
DRAWN BY: MCG	DATE: 05-27-2014	DWG NO. D4
SCALE: 1" = 5'	JOB NO. GC2014-02	SHEET 4 OF 6

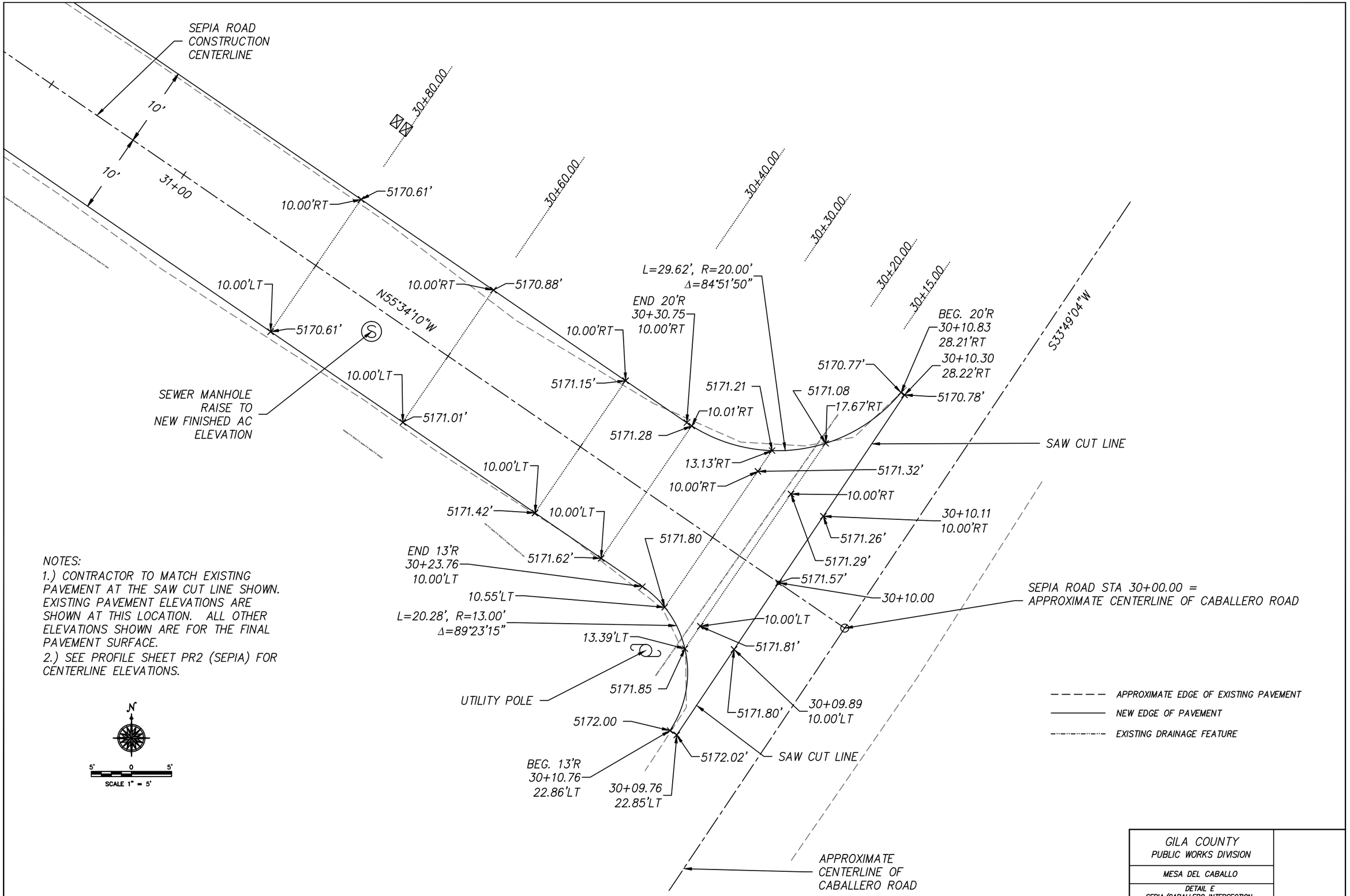

NOTES:

1.) CONTRACTOR TO MATCH EXISTING PAVEMENT AT THE SAW CUT LINE SHOWN. EXISTING PAVEMENT ELEVATIONS ARE SHOWN AT THIS LOCATION. ALL OTHER ELEVATIONS SHOWN ARE FOR THE FINAL PAVEMENT SURFACE.

2.) SEE PROFILE SHEET PR2 (SEPIA) FOR CENTERLINE ELEVATIONS.

GILA COUNTY PUBLIC WORKS DIVISION		
MESA DEL CABALLO		
DETAIL E SEPIA/CABALLERO INTERSECTION		
DRAWN BY: MCG	DATE: 05-27-2014	DWG NO. D5
SCALE: 1" = 5'	JOB NO. GC2014-02	SHEET 5 OF 6

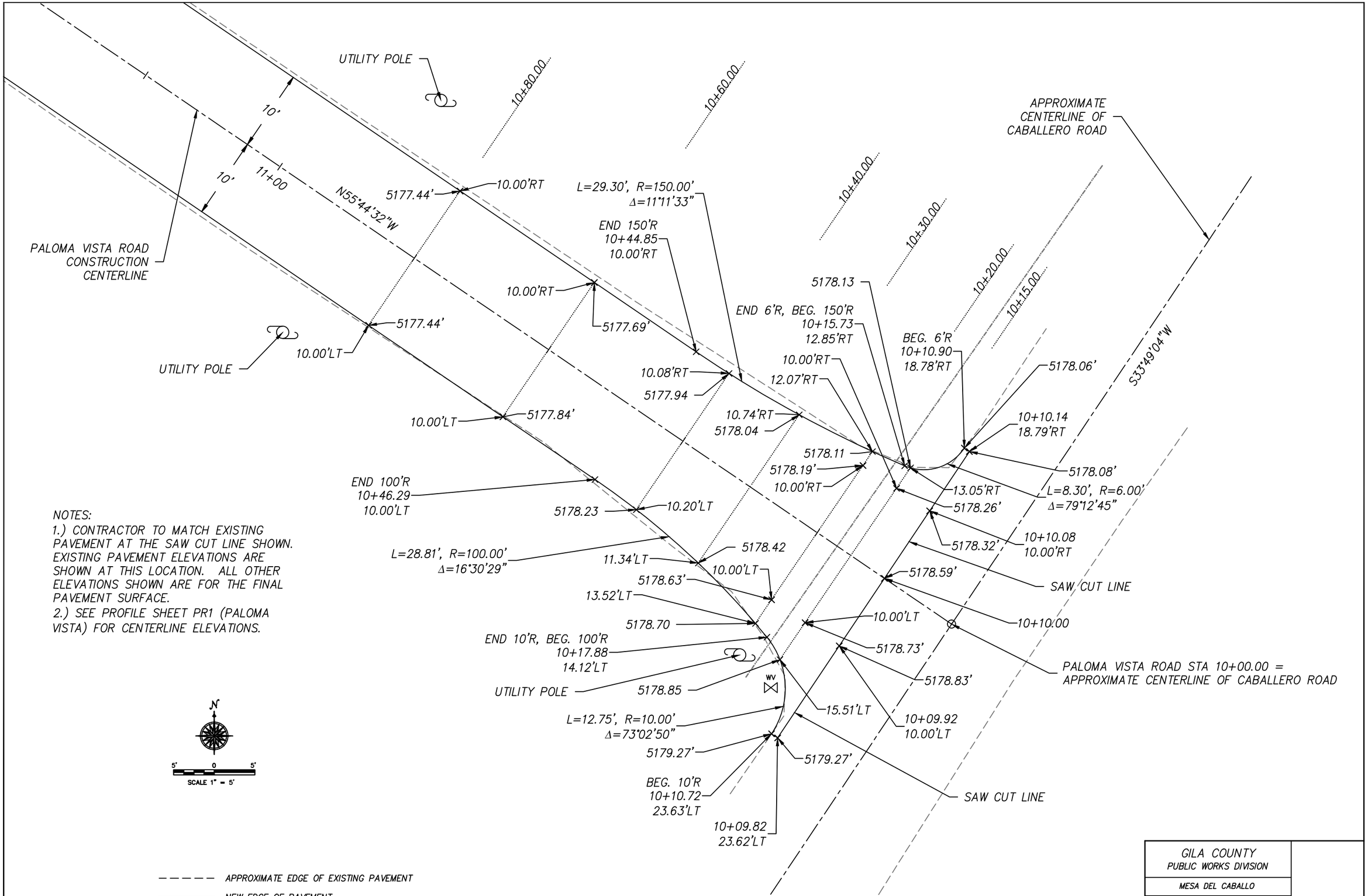

NOTES:

1.) CONTRACTOR TO MATCH EXISTING PAVEMENT AT THE SAW CUT LINE SHOWN. EXISTING PAVEMENT ELEVATIONS ARE SHOWN AT THIS LOCATION. ALL OTHER ELEVATIONS SHOWN ARE FOR THE FINAL PAVEMENT SURFACE.

2.) SEE PROFILE SHEET PR1 (PALOMA VISTA) FOR CENTERLINE ELEVATIONS.

— — — — — APPROXIMATE EDGE OF EXISTING PAVEMENT

———— NEW EDGE OF PAVEMENT

-·-·-·-·-·- EXISTING DRAINAGE FEATURE

GILA COUNTY PUBLIC WORKS DIVISION		
MESA DEL CABALLO		
DETAIL F PALOMA VISTA/CABALLERO INTERSECTION		
DRAWN BY: MCG	DATE: 05-27-2014	DWG NO. D6
SCALE: 1" = 5'	JOB NO. GC2014-02	SHEET 6 OF 6