PURSUANT TO A.R.S. SECTION 38-431.01, THE GILA COUNTY BOARD OF SUPERVISORS WILL HOLD AN OPEN MEETING IN THE SUPERVISORS' AUDITORIUM, 1400 EAST ASH STREET, GLOBE, ARIZONA. ONE OR MORE BOARD MEMBERS MAY PARTICIPATE IN THE MEETING BY TELEPHONE CONFERENCE CALL OR BY INTERACTIVE TELEVISION VIDEO (ITV). **ANY MEMBER OF THE PUBLIC IS WELCOME TO ATTEND THE MEETING VIA ITV WHICH IS HELD AT 610 E. HIGHWAY 260, BOARD OF SUPERVISORS' CONFERENCE ROOM, PAYSON, ARIZONA.** THE AGENDA IS AS FOLLOWS:

REGULAR MEETING - TUESDAY, FEBRUARY 19, 2013 - 10 A.M.

1 Call to Order - Pledge of Allegiance – Invocation

2 **PRESENTATIONS:**

A Recognition of Gila County employees who have been employed for 5, 10, 15, 20, 25, 30 and 35 years in 2012. **(Berthan DeNero/Angelo Cutter)**

3 **REGULAR AGENDA ITEMS:**

A Information/Discussion/Action to adopt Proclamation No. 2013-01, to proclaim March 16, 2013, as "March for Babies Day" in Gila County. **(Margret Celix)**

B Information/Discussion/Action to adopt Resolution No. 13-02-01 accepting a roadway easement on Copper Hills Road as described in Fee Nos. 2013-000552, 2013-000553, and 2013-000554, Gila County Records, as a public road and for said road to be maintained as a public roadway in the Gila County Maintained Roadway System. **(Steve Sanders)**

C Information/Discussion/Action to adopt Resolution No. 13-02-02 to approve the Signing and Striping Plan for Cline Boulevard and Ewing Trail. **(Steve Sanders)**

D Information/Discussion/Action to adopt Resolution No. 13-02-03 which authorizes the Board of Supervisors' execution of Amendment No. One to an Intergovernmental Agreement (ADOT File No. IGA/JPA-07-109I/AG Contract No. P0012008005567) between Gila County and the State of Arizona, Department of Transportation, for the upgrade to the railroad crossing on Bixby Road in Globe. **(Steve Sanders)**

E Information/Discussion/Action to change the Gila County initial enrollment period for employee medical insurance which currently includes a special exception of a ninety- (90) day period to, "All new employees will be covered on the first day of the month coinciding with, or immediately following the completion of thirty (30) days of full-time employment provided proper enrollment has been made and any required contributions have been authorized," to match the Arizona Local Employee Benefit Trust (AZLGEBT) Plan document, effective March 1, 2013. **(Jacque Griffin)**

F Information/Discussion/Action to approve Amendment No. 1 to Software Contract (which is an amendment to a Master Services Agreement) between Colorado CustomWare, Inc. (CCI) and Gila County; to approve a Lease Purchase Agreement between Zions First National Bank and Gila County whereby the County will realize an overall savings of $50,616.55 over a five-year period; and to adopt Resolution No. 13-02-04, which authorizes the approval of the Lease Purchase Agreement, all of which is needed for the Assessor's Office software package. **(Joe Heatherly)**

4 **CONSENT AGENDA ACTION ITEMS:**

A Approval of Amendment No. 1 to an Independent Contractor Agreement (Contract No. 07012012-13) between the Arizona Community Action Association (ACAA) and the Gila County Division of Community Services, Community Action Program, whereby ACAA will allocate SemStream Arizona Propane funds in the amount of $8,255.69 in order to provide propane assistance to eligible families residing in the Payson area of Gila County, and to allocate additional Utility Repair Replacement Deposit (URRD) funds in the amount of $48,000 in order to provide additional repair and replacement services to eligible familes residing in Gila County for the period beginning July 1, 2012, through June 30, 2013.

B Approval of an Agreement between Gila County (dba Gila/Pinal Workforce Investment Board) and Portable Practical Educational Preparation, Inc. (PPEP) whereby Gila County will provide PPEP with work space at the Pinal County Comprehensive One-Stop Center in Casa Grande in the amount of $5,964 per year for the period September 1, 2012, through June 30, 2014.

C Approval of Amendment No. 1 to Professional Service Agreement No. 040512 between Gila County and ATL, Inc. to increase the contract amount by $8,403 for cost overruns, for a total contract amount of $43,403 for work performed on the Pine Creek Canyon Road Reconstruction Project.

D Approval of Amendment No. 1 to Contract No. 032712-1 between Gila County and Visus Engineering Construction to increase the contract amount by $46,157.86 for cost overruns, for a total contract amount of $766,157.86 for work performed on the Russell Road Reconstruction Project.

E Approval of the December 2012 monthly activity report submitted by the Recorder's Office.

F Approval of the January 2013 month departmental activity report submitted by the Globe Regional Justice Court

G Approval of the January 2013 monthly activity report submitted by the Payson Regional Constable's Office

H Approval of the January 29, 2013, and February 5, 2013, BOS meeting minutes.

I Acknowledgment of contracts under $50,000 which have been approved by the County Manager for the weeks of January 14, 2013, to January 18, 2013; and January 21, 2013, to January 25, 2013.

J Approval of finance reports/demands/transfers for the weeks of February 12, 2013, and February 19, 2013.

5 **CALL TO THE PUBLIC:** Call to the Public is held for public benefit to allow individuals to address issue(s) within the Board's jurisdiction. Board members may not discuss items that are not specifically identified on the agenda. Therefore, pursuant to Arizona Revised Statute §38-431.01(H), action taken as a result of public comment will be limited to responding to criticism made by those who have addressed the Board of Supervisors, may ask staff to review the matter or may ask that a matter be put on a future agenda for further discussion and decision at a future date.

6 At any time during this meeting pursuant to A.R.S. §38-431.02(K), members of the Board of Supervisors and the Chief Administrator may present a brief summary of current events. No action may be taken on issues presented.

IF SPECIAL ACCOMMODATIONS ARE NEEDED, PLEASE CONTACT THE RECEPTIONIST AT (928) 425-3231 AS EARLY AS POSSIBLE TO ARRANGE THE ACCOMMODATIONS. FOR TTY, PLEASE DIAL 7-1-1 TO REACH THE ARIZONA RELAY SERVICE AND ASK THE OPERATOR TO CONNECT YOU TO (928) 425-3231.

THE BOARD MAY VOTE TO HOLD AN EXECUTIVE SESSION FOR THE PURPOSE OF OBTAINING LEGAL ADVICE FROM THE BOARD'S ATTORNEY ON ANY MATTER LISTED ON THE AGENDA PURSUANT TO A.R.S. SECTION 38-431.03(A)((3)

THE ORDER OR DELETION OF ANY ITEM ON THIS AGENDA IS SUBJECT TO MODIFICATION AT THE MEETING

ARF-1643 **Presentation Agenda Item 2- A**

Regular BOS Meeting

Meeting Date: 02/19/2013

Submitted For: Berthan DeNero, Human Resources Director

Submitted By: Juley Bocardo-Homan, Human Resources Assistant, Human Resources

Department: Human Resources

Information

Request/Subject

2012 Gila County Employee Service Awards Presentation

Background Information

N/A

Evaluation

N/A

Conclusion

N/A

Recommendation

N/A

Suggested Motion

Recognition of Gila County employees who have been employed for 5, 10, 15, 20, 25, 30 and 35 years in 2012. **(Berthan DeNero/Angelo Cutter)**

Attachments

2012 County Service Awards

5 Years

Aguirre, Debra
Allinson, Misty
Anderson, Jamilyn
Asberry, Leana
Benedetto, Malinda
Boyer, Shannon
Boyer, Roland
Caldera, Dawn
Campbell, Robert
Coker, Kathy
Corn, Robert
Dalton, Jefferson
Dalton, Terry
Delecki, Jacob
DeNero, Berthan
Dorsett, Wayne
Dzera, Lisa
Eastlick, Linda
Escobedo, Ronald
Guerena, Mark
Hale, Kathy
Havey, Matthew
Kell, David
Kimes, Jennifer
Little, Geoff
McKeen, Danny
Mariscal, Eric
Martinez, Sylvia
Pena, Christopher
Phillips, Chris
Pontel, Susan
Puskaric, Anthony
Rakoczy, Wanda
Ray, Merle
Raymond, Erica
Rice, Clarence
Sanchez, Johnny
Scales, Gary
Stuler, Katrisha
Van Haren, Brenda
Warden, Amber
Warden, Mark
Wickwire, Cathy

10 Years

Allen, Mary
Bennett, Forrest
Bennett, Janie
Brooks, Claudia
Canizales, Stephanie
Chapman, Margie
Cox, Denise
Daly, Michelle
Dodd, Virgilio
Esteves, Judy
Garrett, John
Hamm, Andrea
Hernandez, George
Hobson, Richard
Holmes, Johnny
Newman, William D.
Price, Misty
Short, Laura
Sluyter, Cheryl
Stemm, Mary
Stratton, Steve

15 Years

Badilla, Sylvia
Bolinger, Jesse
Branch, Carol
Cline, Lonny
Coons, Shannon
DeAnda, Vicki
Doss, Ken
Farnham, Glen
Hickman, Robert
Hillery, Nyra
Rios, Esther
Sheppard, Marian
Soderman, Linda
York, Bree'na

20 Years

Chambers, Bryan
DeSchaaf, Tina
Eylicio, Gabriel
Huffer, Larry
Sartain, Jendean

25 Years

Franquero, David
Guthrey, Barbara
Little, Dorothy

30 Years

Licano, Belinda
Taylor, Richard

35 Years

Root, John

ARF-1681 **Regular Agenda Item 3- A**

Regular BOS Meeting

Meeting Date: 02/19/2013

Submitted By: Marian Sheppard, Chief Deputy Clerk, BOS, Clerk of the Board of Supervisors

Department: Clerk of the Board of Supervisors

Information

Request/Subject

Adoption of Proclamation No. 2013-01, to proclaim March 16, 2013, as "March for Babies Day" in Gila County.

Background Information

The Chief Deputy Clerk of the Board of Supervisors received this request from Margret Celix, Chairman of the Globe-Miami March of Dimes Committee, to present a proclamation to the Board of Supervisors for its adoption at a future Board meeting.

Evaluation

The March of Dimes Foundation is a national organization whose mission is as follows: "We help moms have full-term pregnancies and research the problems that threaten the health of babies." It is important to honor this request for the Board of Supervisors to adopt a proclamation to proclaim March 16, 2013, as "March for Babies Day" in Gila County, so hopefully citizens will join in a local fundraising Walkathon in Globe-Miami on Saturday, March 16th, or make a contribution to this worthwhile cause.

Conclusion

By having the Board of Supervisors adopt Gila County Proclamation No. 2013-01, it will help the Globe-Miami March of Dimes Committee spread the word about the upcoming March of Dimes Walkathon fundraiser event on Saturday, March 16, 2013, to be held in the local area.

Recommendation

It is recommended that Ms. Celix be allowed the opportunity to present a proclamation to the Board of Supervisors for its adoption to proclaim March 16, 2013, as "March for Babies Day" in Gila County.

Suggested Motion

Information/Discussion/Action to adopt Proclamation No. 2013-01, to proclaim March 16, 2013, as "March for Babies Day" in Gila County. **(Margret Celix)**

Attachments

Proclamation No. 2013-01

PROCLAMATION NO. 2013-01

A PROCLAMATION OF THE BOARD OF SUPERVISORS OF GILA COUNTY, ARIZONA, PROCLAIMING MARCH 16, 2013, AS "MARCH FOR BABIES DAY" IN GILA COUNTY.

WHEREAS, the mission of the March of Dimes is to improve the health of babies by preventing birth defects, premature births and infant mortality; and

WHEREAS, the United States has more than 500,000 babies who are born too soon each year; and

WHEREAS, prematurity is the leading cause of newborn deaths and babies who survive an early birth often face the risk of lifetime challenges such as breathing problems, cerebral palsy, mental retardation and others; and

WHEREAS, 15 million babies worldwide were born preterm and more than one million die each year; and

WHEREAS, the March of Dimes is determined to find answers to reduce the rate of preterm births; and

WHEREAS, research breakthroughs funded by the March of Dimes are already saving the lives of countless babies who were born prematurely; and

WHEREAS, the March of Dimes has a 75-year history of providing education programs and success in funding research to improve public health, starting with the development of the polio vaccine that has eradicated the threat of the disabling and deadly virus in the United States.

NOW, THEREFORE, BE IT RESOLVED that we, the members of the Gila County Board of Supervisors, do hereby proclaim March 16, 2013, to be ***"MARCH FOR BABIES DAY"*** in Gila County, in an effort to educate our childbearing mothers and, in turn, this should decrease the number of premature births.

PASSED AND ADOPTED this 19th day of February 2013.

ATTEST:

Marian Sheppard
Chief Deputy Clerk

GILA COUNTY BOARD OF SUPERVISORS

Michael A. Pastor, Chairman

Tommie C. Martin, Vice-Chairman

John D. Marcanti, Member

ARF-1663 **Regular Agenda Item 3- B**

Regular BOS Meeting

Meeting Date: 02/19/2013

Submitted For:	Steve Sanders, Public Works Division Deputy Director	Submitted By:	Steve Sanders, Public Works Division Deputy Director, Public Works Division
Department:	Public Works Division	Division:	Engineering

Information

Request/Subject

Resolution No. 13-02-01 Accepting a Roadway Easement on Copper Hills Road

Background Information

Copper Hills Road is located approximately 1 mile north of Globe. The first 2.4 miles of the road already exists in the Gila County Maintained Roadway System. The road then enters Copper Canyon Ranches Subdivision and becomes a private road. Maintenance of the road is the responsibility of the Home Owners' Association (HOA.) The road has a gravel surface and the length of the road is 2.1 miles. At this point the road leaves the subdivision and enters the Tonto National Forest. Gila County maintains the road through the Tonto National Forest through our annual maintenance agreement. Last year residents in the subdivision approached County Management about the possibility of the County accepting maintenance of the road through the subdivision. Public Works staff evaluated the request.

Evaluation

The road foreman in the region along with staff from the Engineering Department visited the road and found the road to be in a good condition with a gravel surface with no signs of drainage problems.

Conclusion

In conclusion, if the Board of Supervisors accepts the road into the Gila County Maintained Roadway System it will not place an additional burden on the Roads Department to maintain the road, nor will the current level of service provided on other roads in the area diminish. Adding approximately 2.1 miles of road into the County Maintained Roadway System should generate some additional revenue from the Highway User Revenue Fund (HURF).

Recommendation

It is the recommendation of the Deputy Director of Public Works that the Board of Supervisors adopt Resolution No. 13-02-01.

Suggested Motion

Information/Discussion/Action to adopt Resolution No. 13-02-01 accepting a roadway easement on Copper Hills Road as described in Fee Nos. 2013-000552, 2013-000553, and 2013-000554, Gila County Records, as a public road and for said road to be maintained as a public roadway in the Gila County Maintained Roadway System. **(Steve Sanders)**

Attachments

Resolution 13-02-01

Fee No. 2013-000552

Fee no. 2013-000553

Fee No. 2013-000554

RESOLUTION NO. 13-02-01

A RESOLUTION OF THE GILA COUNTY BOARD OF SUPERVISORS OFFICIALLY ACCEPTING A ROADWAY EASEMENT FOR COPPER HILLS ROAD AS DESCRIBED IN FEE NOS. 2013-000552, 2013-000553, AND 2013-000554 GILA COUNTY RECORDS, AS A PUBLIC ROAD AND TO BE MAINTAINED AS A PUBLIC ROADWAY IN THE GILA COUNTY MAINTAINED ROADWAY SYSTEM

WHEREAS, in accordance with the provisions of A.R.S. §28-6705 the Gila County Board of Supervisors may spend public monies for maintenance of public roads other than highways; and,

WHEREAS, said Board of Supervisors acknowledges that this road was laid out, opened and constructed without cost to the County.

NOW, THEREFORE, BE IT RESOLVED by the Gila County Board of Supervisors that Copper Hills Road as described in Fee Nos. 2013- 000552, 2013-000553, and 2013-000554 be maintained as a public roadway.

PASSED AND ADOPTED this 19th day of February 2013.

Attest:

_____
Marian Sheppard
Deputy Clerk of the Board

GILA COUNTY BOARD OF SUPERVISORS

_____
Michael A. Pastor, Chairman of the Board

Approved as to form:

_____
Bryan Chambers
Deputy Attorney Principal

2013-000552 E Page: 1 of 2
01/15/2013 01:09:44 PM Receipt #: 13-0376
Rec Fee: $0 Gila County Public Works
Gila County, Az, Sadie Tomerlin Dalton, Recorder

When recorded return to:
GILA COUNTY PUBLIC WORKS DEPT.
745 N. ROSE MOFFORD WAY
GLOBE, AZ 85501

GRANT OF EASEMENT

Roadway Easement

For the consideration of TEN AND NO/100 DOLLARS, and other valuable considerations, we,

COPPER CANYON RANCHES PROPERTY OWNERS' ASSOCIATION, the GRANTOR does hereby convey to

GILA COUNTY, a BODY POLITIC, the GRANTEE

A roadway easement across the following described property situate in Gila County, State of Arizona, and legally described as follows:

See Exhibit "A" attached and made part hereof

Exempt per A. R. S. section 11-1134 A-3

Dated this 29th day of November 2012

ROBERT DAVIES
COPPER CANYON RANCHES PROPERTY OWNERS' ASSOCIATION
PRESIDENT

STATE OF ARIZONA)
) ss.
COUNTY OF GILA)

ACKNOWLEDGMENT

On this 29 day of November, 2012, before me, the undersigned Notary Public, personally appeared ROBERT DAVIES, known to me to be the individual who executed the foregoing instrument and acknowledged the same to be his free act and deed.

WITNESS my hand and official seal.

My Commission Expires: 4-13-15

Notary Public

OFFICIAL SEAL
SHANNON BOYER
NOTARY PUBLIC - State of Arizona
GILA COUNTY
My Comm. Expires April 13, 2015

Unofficial Copy

2013-000552 E Page: 2 of 2
01/15/2013 01:09:44 PM Receipt #: 13-0376
Rec Fee: $0 Gila County Public Works
Gila County, Az; Sadie Tomerlin Dalton, Recorder

Exhibit A

LEGAL DESCRIPTION

(Easement over a portion of Copper Hills Road)

Gila County Public Works
Job No. GC2012-06 (COPPER CANYON RANCHES PROPERTY OWNERS' ASSOCIATION to Gila County)

November 27, 2012

PARCEL NO. 1

A strip of land 54.00 feet in width located in the Northeast Quarter of Section 15, Township 1 North, Range 15-1/2 East, Gila and Salt River Meridian, Gila County, Arizona. Said strip of land being that property described in Fee No. 95-666584, records of the Gila County Recorder, Gila County, Arizona.

PARCEL NO. 2

A strip of land 54.00 feet in width located in the Southwest Quarter of Section 2, Township 1 North, Range 15-1/2 East, Gila and Salt River Meridian, Gila County, Arizona. Said strip of land being a portion of Copper Hill Road, shown on Copper Canyon Ranches I, Gila County Plats 633 - 633-F, records of the Gila County Recorder, Gila County, Arizona.

PARCEL NO. 3

A strip of land 54.00 feet in width located in Sections 14 and 15, Township 1 North, Range 15-1/2 East, Gila and Salt River Meridian, Gila County, Arizona. Said strip of land being a portion of Copper Hill Road, shown on Copper Canyon Ranches II, Gila County Plats 671 - 671-B, records of the Gila County Recorder, Gila County, Arizona.

Unofficial Copy

2013-000553 E Page: 1 of 2
01/15/2013 01:09:44 PM Receipt #: 13-0376
Rec Fee: $0 Gila County Public Works
Gila County, Az, Sadie Tomerlin Dalton, Recorder

When recorded return to:
GILA COUNTY PUBLIC WORKS DEPT.
745 N. ROSE MOFFORD WAY
GLOBE, AZ 85501

GRANT OF EASEMENT

Roadway Easement

For the consideration of TEN AND NO/100 DOLLARS, and other valuable considerations, we,

FRANK L. HOLDER, the GRANTOR does hereby convey to

GILA COUNTY, a BODY POLITIC, the GRANTEE

A roadway easement across the following described property situate in Gila County, State of Arizona, and legally described as follows:

See Exhibit "A" attached and made part hereof

Exempt per A. R. S. section 11-1134 A-3

Dated this 26th day of December 2012

FRANK L. HOLDER

STATE OF ARIZONA)
) ss.
COUNTY OF GILA)

ACKNOWLEDGMENT

On this 26th day of December, 2012, before me, the undersigned Notary Public, personally appeared FRANK L. HOLDER, known to me to be the individual who executed the foregoing instrument and acknowledged the same to be his free act and deed.

WITNESS my hand and official seal.

Notary Public

My Commission Expires:
January 7, 2013

LEONARD V STROM
NOTARY PUBLIC - ARIZONA
Gila County
My Commission Expires
January 7, 2013

Unofficial Copy

2013-000553 E Page: 2 of 2
01/15/2013 01:09:44 PM Receipt #: 13-0376
Rec Fee: $0 Gila County Public Works
Gila County, Az, Sadie Tomerlin Dalton, Recorder

Exhibit A

LEGAL DESCRIPTION

(Easement over a portion of Parcel No. 205-06-018C)

Gila County Public Works
Job No. GC2012-06 (FRANK L. HOLDER to Gila County)

November 27, 2012

A strip of land 54.00 feet in width located in Section 11, Township 1 North, Range 15-1/2 East, Gila and Salt River Meridian, Gila County, Arizona. Said strip of land being only that portion of that property described in Docket 842, Pages 170 - 175, records of the Gila County Recorder, Gila County, Arizona, lying in the Northwest Quarter of said Section 11.

Unofficial Copy

2013-000554 E Page: 1 of 3
01/15/2013 01:09:44 PM Receipt #: 13-0376
Rec Fee: $0 Gila County Public Works
Gila County, Az; Sadie Tomerlin Dalton, Recorder

When recorded return to:
GILA COUNTY PUBLIC WORKS DEPT.
745 N. ROSE MOFFORD WAY
GLOBE, AZ 85501

GRANT OF EASEMENT

Roadway Easement

For the consideration of TEN AND NO/100 DOLLARS, and other valuable considerations, we,

MITCHELL RAY HOLDER and PATRICIA BESS HOLDER, the GRANTOR does hereby convey to

GILA COUNTY, a BODY POLITIC, the GRANTEE

A roadway easement across the following described property situate in Gila County, State of Arizona, and legally described as follows:

See Exhibit "A" attached and made part hereof

Exempt per A. R. S. section 11-1134 A-3

Dated this 26th day of December 2012

Mitchell Ray Holder — Patricia Bess Holder

MITCHELL RAY HOLDER PATRICIA BESS HOLDER

STATE OF ARIZONA)
) ss.
COUNTY OF GILA)

ACKNOWLEDGMENT

On this 26th day of December, 2012, before me, the undersigned Notary Public, personally appeared MITCHELL RAY HOLDER, known to me to be the individual who executed the foregoing instrument and acknowledged the same to be their free act and deed.

WITNESS my hand and official seal.

Leonard V Strom
Notary Public

My Commission Expires:
January 7, 2013

LEONARD V STROM
NOTARY PUBLIC - ARIZONA
Gila County
My Commission Expires
January 7, 2013

Unofficial Copy

2013-000554 E Page: 2 of 3
01/15/2013 01:09:44 PM Receipt #: 13-0376
Rec Fee: $0 Gila County Public Works
Gila County, Az, Sadie Tomerlin Dalton, Recorder

Dated this 26th day of December 2012

STATE OF ARIZONA)
) ss.
COUNTY OF GILA)

ACKNOWLEDGMENT

On this 26th day of December, 2012, before me, the undersigned Notary Public, personally appeared PATRICIA BESS HOLDER, known to me to be the individual who executed the foregoing instrument and acknowledged the same to be their free act and deed.

WITNESS my hand and official seal.

Leonard V Strom
Notary Public

My Commission Expires:
January 7, 2013

LEONARD V STROM
NOTARY PUBLIC - ARIZONA
Gila County
My Commission Expires
January 7, 2013

Unofficial Copy

2013-000554 E Page: 3 of 3
01/15/2013 01:09:44 PM Receipt #: 13-0376
Rec Fee: $0 Gila County Public Works
Gila County, Az, Sadie Tomerlin Dalton, Recorder

Exhibit A

LEGAL DESCRIPTION

(Easement over a portion of Parcel No. 205-06-018J)

Gila County Public Works **November 27, 2012**
Job No. GC2012-06 (M. and P. HOLDER to Gila County) **Page 1 of 1**

A strip of land 54.00 feet in width located in Section 11, Township 1 North, Range 15-1/2 East, Gila and Salt River Meridian, Gila County, Arizona. Said strip of land being only that portion of that property described in Docket 842, Pages 170 - 175, records of the Gila County Recorder, Gila County, Arizona, lying in the Southwest Quarter of said Section 11.

Unofficial Copy

ARF-1666 **Regular Agenda Item 3- C**

Regular BOS Meeting

Meeting Date: 02/19/2013

Submitted For:	Steve Sanders, Public Works Division Deputy Director	Submitted By:	Steve Sanders, Public Works Division Deputy Director, Public Works Division
Department:	Public Works Division	Division:	Engineering

Information

Request/Subject

Request to adopt Resolution No. 13-02-02

Background Information

The Gila County Roads Department recently applied a double chip seal on the gravel surface of Ewing Trail and Cline Boulevard (aka Forest Road 423). Due to the surface change a signing and striping plan needed to be developed for the road.

Evaluation

Public Works contracted with C.L. Williams Consulting Inc. to perform an engineering warrant study and from the study develop a signing and striping plan for Cline Boulevard and Ewing Trail in accordance with the current standards of the Manual on Uniform Traffic Control Devices (MUTCD).

Conclusion

The results of the study showed the need for new regulatory and advisory signage along with new roadway markings. The plans entitled “Signing and Striping Plan for Cline Boulevard & Ewing Trail” sealed and dated December 12, 2012, is on file with the Gila County Engineer.

Recommendation

It is the recommendation of the Deputy Director of Public Works that the Board adopt Resolution No. 13-02-02 adopting the signing and striping plan for Cline Boulevard and Ewing Trail.

Suggested Motion

Information/Discussion/Action to adopt Resolution No. 13-02-02 to approve the Signing and Striping Plan for Cline Boulevard and Ewing Trail. **(Steve Sanders)**

Attachments

Resolution No. 13-02-02

Engineering Study

RESOLUTION NO. 13-02-02

A RESOLUTION OF THE BOARD OF SUPERVISORS OF GILA COUNTY, ARIZONA, AUTHORIZING THE PLACEMENT OF REGULATORY SIGNAGE AND STRIPING ON CLINE BOULEVARD AND EWING TRAIL IN TONTO BASIN, GILA COUNTY, ARIZONA

WHEREAS, the Gila County Board of Supervisors desires to provide maximum protection to the users of roads, streets, and highways in Gila County; and,

WHEREAS, said Board of Supervisors acknowledges the State of Arizona has adopted the Manual on Uniform Traffic Control Devices (MUTCD) as published by the Federal Highway Administration, with some exceptions (A.R.S. §28-641, State Sign Manual); and,

WHEREAS, in accordance with A.R.S. §28-643, Local Traffic Control Devices, which states, *"Local authorities in their respective jurisdictions shall place and maintain the traffic control devices on highways under their jurisdiction as they deem necessary to indicate and to carry out this chapter or local traffic ordinances or to regulate, warn or guide traffic. All traffic control devices erected shall conform to the manual and specifications prescribed in section 28-641."* and,

WHEREAS, official recognition of the proper position of regulatory types of signs is required to provide legal enforcement.

NOW, THEREFORE, BE IT RESOLVED by the Board of Supervisors that Cline Boulevard and Ewing Trail are authorized to be striped and signed in accordance with the Cline Boulevard and Ewing Trail Signing and Striping Plan dated December 22, 2012, which is on file in the office of the Gila County Engineer,

PASSED AND ADOPTED this 19th day of February 2013, at Globe, Gila County, Arizona.

Attest: **GILA COUNTY BOARD OF SUPERVISORS**

_____ _____

Marian Sheppard, Chief Deputy Clerk Michael A. Pastor, Chairman

Approved as to form:

_____

Bryan Chambers, Deputy Attorney Principal

C.L. WILLIAMS CONSULTING, INC.
CIVIL ENGINEERING AND RESOURCE MANAGEMENT

December 12, 2012

Mr. Steve Stratton, Director
Gila County Public Works Division
745 North Rose Mofford Way
Globe, Arizona 85501

RE: Recommendation to Install New Regulatory Traffic Control Signage
Cline Boulevard & Ewing Trail

Dear Mr. Stratton:

C.L. Williams Consulting Inc. (CLW) has completed an evaluation of the horizontal and vertical alignments of Cline Boulevard and Ewing Trail, within the Tonto Basin area, from A-Cross Road to Greenback Valley Road.

The information contained within the enclosed plans, dated December 12, 2012, reflects our recommendations to install new regulatory traffic control signing within the limits of the project based on the results of the evaluation. The evaluation of the horizontal alignment was performed using standard engineering practices that consider: surface type (i.e., friction coefficients), curvature of the roadway and surface cross slope or superelevation. Evaluation of the vertical alignment considered stopping and passing distance based on the rate of grade change. Both evaluations were done in accordance with guidelines provided within the *A Policy on Geometric Design of Highways and Streets*, 2004 Edition, American Association of State Highway and Transportation Officials. This guideline is typically employed for transportation systems within the State of Arizona.

The signage recommended herein is in accordance with the guidelines and practices as included within *Manual on Uniform Traffic Control Devices for Streets and Highways*, 2009 Edition, and other standards issued or endorsed by the Federal Highway Administration. Accordingly, the State of Arizona has adopted the *Manual of Uniform Traffic Control Devices* (MUTCD) developed by the National Joint Committee on Uniform Traffic Control Devices and published by the Federal Highway Administration, with some exceptions, as the official standard for use on all streets and highways open to public travel. This is described in A.R.S.§28-641.

If you have any questions or comments please feel free to call me at (928) 367-2248.

Sincerely,
C.L. Williams Consulting Inc.

Chuck Williams, PE
Principal

Expires 12/31/2013

621 S. HILLSIDE LANE
PINETOP, ARIZONA 85935
TEL: 928-367-2248
FAX: 928-367-2348

ARF-1676 **Regular Agenda Item 3- D**

Regular BOS Meeting

Meeting Date: 02/19/2013

Submitted For:	Steve Sanders, Public Works Division Deputy Director	Submitted By:	Steve Sanders, Public Works Division Deputy Director, Public Works Division
Department:	Public Works Division	Division:	Engineering
Fiscal Year:	FY 12/13	Budgeted?:	Yes
Contract Dates Begin & End:	2/19/13 thru 6/30/13	Grant?:	No
Matching Requirement?:	Yes	Fund?:	Renewal

Information

Request/Subject

Resolution No. 13-02-03 Authorizing Execution of Amendment No. One to IGA (ADOT File No. IGA/JPA-070) with ADOT for the upgrade to the railroad crossing on Bixby Road in Globe

Background Information

On December 9, 2008, Gila County entered into an Intergovernmental Agreement (ADOT File No. IGA/JPA-07-109I/AG Contract No. P0012008005567) with the State of Arizona, Department of Transportation (ADOT) to upgrade the railroad crossing on Bixby Road. The Agreement required a match from Gila County in the amount of $5800.33 for the County's share of estimated construction costs. The County paid its share on April 5, 2010. One of the upgrades consisted of installing a timber crossing on Bixby Road. Due the heavy truck traffic on the road the County requested a concrete crossing. ADOT agreed to the concrete crossing and told the County that if the concrete crossing increased the cost of the project, Gila County would be responsible for 5.7% of a cost increase.

The crossing upgrade was completed last year and a concrete crossing was installed. The upgrade from timber to concrete resulted in an increased cost of $10,398. Gila County is required to pay 5.7% of the additional cost which is $593.

Evaluation

Having a concrete crossing instead of a timber surface will add years of life to the crossing and reduce maintenance costs at the crossing.

Conclusion

Bixby Road is a County maintained road and spending an additional $593 for the crossing upgrade will likely save thousands of dollars in future maintenance costs and manpower hours.

Recommendation

It is the recommendation of the Deputy Director of Public Works that the Board adopt Resolution No. 13-02-03, which authorizes the execution of Amendment No. One to this Intergovernmental Agreement.

Suggested Motion

Information/Discussion/Action to adopt Resolution No. 13-02-03 which authorizes the Board of Supervisors' execution of Amendment No. One to an Intergovernmental Agreement (ADOT File No. IGA/JPA-07-109I/AG Contract No. P0012008005567) between Gila County and the State of Arizona, Department of Transportation, for the upgrade to the railroad crossing on Bixby Road in Globe. **(Steve Sanders)**

Attachments

Resolution No. 13-02-03

Amendment No. One to JPA 07-109I

JPA 07-109I

Legal Explanation

RESOLUTION NO. 13-02-03

A RESOLUTION OF THE BOARD OF SUPERVISORS OF GILA COUNTY, ARIZONA, AUTHORIZING THE EXECUTION OF AMENDMENT NO. ONE TO AN INTERGOVERNMENTAL AGREEMENT (AG CONTRACT NO. P0012008005567) BETWEEN GILA COUNTY AND THE STATE OF ARIZONA, DEPARTMENT OF TRANSPORTATION, FOR THE UPGRADE TO THE RAILROAD CROSSING ON BIXBY ROAD IN GLOBE.

WHEREAS, the Gila County Board of Supervisors is desirous of undertaking the upgrade to the railroad crossing on Bixby Road in Globe; and

WHEREAS, Amendment No. One to the existing the Intergovernmental Agreement requires a resolution of Gila County to authorize execution of the agreement.

NOW, THEREFORE, BE IT RESOLVED that the Gila County Board of Supervisors authorizes the execution of Amendment No. One to an Intergovernmental Agreement (AG Contract No. P0012008005567) between Gila County and the State of Arizona, Department of Transportation, for the construction of the upgrade to the railroad crossing on Bixby Road in Globe.

PASSED AND ADOPTED this 19th day of February 2013, at Globe, Gila County, Arizona.

Attest: **GILA COUNTY BOARD OF SUPERVISORS**

_____ _____

Marian Sheppard, Chief Deputy Clerk Michael A. Pastor, Chairman

Approved as to form:

_____

Bryan Chambers
Deputy Attorney Principal

ADOT File No.: IGA/ JPA 07-109I
AG Contract No.: P0012008005567
Amendment No. One
Project: STP-000-6(151)P
Section: BIXBY RD (GILA CO)
#742-364-Y
TRACS No.: **SR170 01C**
Budget Source Item No.:

AMENDMENT NO. ONE
TO
INTERGOVERNMENTAL AGREEMENT

BETWEEN
THE STATE OF ARIZONA
AND
THE GILA COUNTY

THIS AGREEMENT, entered into this date _____, 2013, pursuant to Arizona Revised Statutes § 11-951 through § 11-954, as amended, between the STATE OF ARIZONA, acting by and through its DEPARTMENT OF TRANSPORTATION (the "State") and the GILA COUNTY, acting by and through its CHAIRMAN and BOARD OF SUPERVISORS (the "County"). The County and State are collectively referred to as the "Parties."

Whereas, the parties have previously entered into INTERGOVERNMENTAL AGREEMENT, GILA COUNTY, A.G. Contract No.: P0012008005567, File No. JPA 01-109I, (hereafter, "the Agreement"); and,

Whereas, the parties desire to revise and apply additional funding for the upgrade of railroad crossing (#742-364-Y).

I. RECITALS

1. The State is empowered by Arizona Revised Statutes § 28-401 to enter into this Agreement and has delegated to the undersigned the authority to execute this Agreement on behalf of the State.

2. The County is empowered by Arizona Revised Statutes § 11-251 to enter into this Agreement and has by resolution, a copy of which is attached hereto and made a part hereof, resolved to enter into this Agreement and has authorized the undersigned to execute this Agreement on behalf of the County.

The Parties acknowledge that the final bid amount may exceed the initial estimate(s) shown above, and in such case, the County is responsible for, and agrees to pay, any and all eventual, actual costs exceeding the initial estimate. If the final bid amount is less than the initial estimate, the difference between the final bid amount and the initial estimate will be de-obligated or otherwise released from the Project. The County acknowledges it remains responsible for, and agrees to pay according to the terms of this Agreement, any and all eventual, actual costs exceeding the final bid amount.

THEREFORE, in consideration of the mutual Agreements expressed herein, due to added requirements and estimated costs the Parties agree to amend the original Agreement as follows:

Article I, Paragraph 6 is revised as follows:

6. The work embraced in this Agreement is to upgrade the railroad crossing (#742-364-Y), by furnishing and installing flashers, gates and a timber crossing surface at Bixby Road in Gila County, hereinafter referred to as the "Project". The estimated construction costs are **revised** as follows:

SR170 01C

Preliminary Engineering	$ 4,000.00
Furnish and Install Poles with LED Flashing Lights (by Railroad forces)	$158,132.09
Total protection Work	$162,132.09
Furnish and Install a Timber Crossing Surface (by Railroad forces)	$101,760.23
Total Project	$263,892.32
Federal Funds @ 94.3% of $263,892.32	$248,850.46
AZ Corp. Comm. Funds @ 5.7% of $162,132.09	$ 9,241.53
Gila County Funds @ 5.7% of $101,760.23	$ 5,800.33

Breakdown of Estimated Additional Project Costs:

Additional federal funds to furnish and Install poles with LED flashing lights (by Railroad forces) @ 100% federal funds	**$ 555.00**
Additional federal funds to furnish and install a concrete crossing surface (by Railroad forces) @ 94.3% of $10,398.00	**$ 9,805.00**
Additional County funds to furnish and install a concrete crossing surface (by Railroad forces) @ 5.7% of $10,398.00	**$ 593.00**
TOTAL Additional Project Costs:	**$10,953.00**

II. SCOPE OF WORK

Article II, Paragraph 1. e. is added follows:

1. The State shall:

e. Upon execution of this Agreement, and prior to performing or authorizing any work, invoice the County, for the County's ***additional*** estimated share of Project costs, currently estimated at **$593.00**. Once the Project costs have been finalized, the State will either invoice or reimburse the County for the difference between estimated and actual costs.

Article II, Paragraph 2. h. and i. are added as follows:

2. The County shall:

g. Within thirty (30) days of receipt of an invoice from the State, and prior to the performance or authorization of any work, remit the County's share for additional Project costs currently estimated at **$593.00** to the State.

h. Certify that all necessary rights-of-way have been or will be acquired prior to advertisement for bid and also certify that all obstructions or unauthorized encroachments of whatever nature, either above or below the surface of the Project area, shall be removed from the proposed right-of-way, or will be removed prior to the start of construction, in accordance with The Uniform Relocation Assistance and Real Property Acquisition Policies Act of 1970 as amended; 49 CFR 24.102 Basic Acquisition Policies; 49 CFR 24.4 Assurances, Monitoring and Corrective Action, parts (a) & (b) and ADOT ROW Manual: 8.02 Responsibilities, 8.03 Prime Functions, 9.07 Monitoring Process and 9.08 Certification of Compliance. Coordinate with the appropriate State's Right-of-Way personnel during any right-of-way process performed by the County, if applicable.

III. MISCELLANEOUS PROVISIONS

This Agreement shall become effective upon signing and dating of the Determination Letter by the State's Attorney General.

ALL NOTICES OR DEMANDS upon any party to this Agreement shall be in writing and shall be delivered in person or sent by mail addressed as follows:

Arizona Department of Transportation
Joint Project Administration
205 S. 17th Avenue, Mail Drop 637E
Phoenix, Arizona 85007
(602) 712-7124
(602) 712-3132 Fax

Gila County
Attn: Steve Sanders
1400 E. Ash Street
Globe, AZ 85501
(928) 402-8530
(928) 425-8104 FAX

PURSUANT TO ARIZONA REVISED STATUTES§ 11-952 (D), attached hereto and incorporated herein, is the written determination of each party's legal counsel that the parties are authorized under the laws of this State to enter into this Agreement and that the Agreement is in proper form.

EXCEPT AS AMENDED herein, **ALL OTHER** terms and conditions of the original Agreement remain in full force and effect.

IN WITNESS WHEREOF, the Parties have executed this Amended Agreement the day and year first above written.

GILA COUNTY

By _____
MICHAEL A. PASTOR
Chairman

ATTEST:

By _____
MARIAN SHEPPARD
Chief Deputy Clerk

STATE OF ARIZONA
Department of Transportation

By _____
DALLAS HAMMIT, P.E.
Senior Deputy State Engineer for Development

JPA 07-109I
Amendment No. One

ATTORNEY APPROVAL FORM FOR THE GILA COUNTY

I have reviewed the above referenced Intergovernmental Agreement between the State of Arizona, acting by and through its DEPARTMENT OF TRANSPORTATION, and the GILA COUNTY, an Agreement among public agencies which, has been reviewed pursuant to A.R.S. § 11-951 through § 11-954 and declare this Agreement to be in proper form and within the powers and authority granted to the GILA COUNTY under the laws of the State of Arizona.

No opinion is expressed as to the authority of the State to enter into this Agreement.

DATED this _____ day of _____, 2013.

_____

Bryan Chambers, Deputy Attorney Principal

IGA/JPA File No.: 07-109I
AG Contract No.: P0012008005567
Project No: STP-000-6(151)P
Project: Flashers, Gates
Section: BIXBY RD (GILA CO)
#742-364-Y
TRACS No.: SR 17001C
Budget Source Item No.:

INTERGOVERNMENTAL AGREEMENT

BETWEEN
THE STATE OF ARIZONA
AND
THE GILA COUNTY

THIS AGREEMENT is entered into this date January 8, 2009, pursuant to the Arizona Revised Statutes § 11-951 through 11-954, as amended, between the STATE OF ARIZONA, acting by and through its DEPARTMENT OF TRANSPORTATION (the "State") and the GILA COUNTY acting by and through its Board of Supervisors (the "County"). The State and the County are collectively referred to as "Parties".

I. RECITALS

1. The State is empowered by Arizona Revised Statutes § 28-401 to enter into this Agreement and has delegated to the undersigned the authority to execute this Agreement on behalf of the State.

2. The County is empowered by Arizona Revised Statutes § 48-572 to enter into this Agreement and has by resolution, a copy of which is attached hereto and made a part hereof, resolved to enter into this Agreement and has authorized the undersigned to execute this Agreement on behalf of the County.

3. Congress has authorized appropriations for the erection of automatic warning signals, automatic gate arms, plank crossings, and other railroad crossing related appurtenances.

4. The County has selected a project within the boundary of the County, the field survey of the project has been completed, and the plans, estimates and specifications have been prepared and, as required, submitted to the State and Federal Highway Administration ("FHWA") for their approval

5. The only interest of the State for this project is in the acquisition of Federal funds for the use and benefit of the County by reason of Federal Law and regulations under which funds for the Project are authorized to be expended.

NO. 30572
Filed with the Secretary of State
Date Filed: 1-8-09
Jenice K. Brewer
Secretary of State
By:

6. The work embraced in this Agreement is to upgrade the railroad crossing (#742-364-Y), by furnishing and installing flashers, gates and a timber crossing surface at Bixby Road in Gila County, hereinafter referred to as the "Project". The estimated construction costs are as follows:

Preliminary Engineering	$ 4,000.00
Furnish and Install Poles with LED Flashing Lights (by Railroad forces)	$158,132.09
Total protection Work	$162,132.09
Furnish and Install a Timber Crossing Surface (by Railroad forces)	$101,760.23
Total Project	$263,892.32
Federal Funds @ 94.3% of $263,892.32	$248,850.46
AZ Corp. Comm. Funds @ 5.7% of $162,132.09	$ 9,241.53
Gila County Funds @ 5.7% of $101,760.23	$ 5,800.33

THEREFORE, in consideration of the mutual Agreements expressed herein, it is agreed as follows:

II. SCOPE OF WORK

1. The State shall:

a. Submit a program containing the aforementioned Project to FHWA with the recommendation that it be approved for construction

b. If such Project is approved for construction by FHWA and the funds are available for construction of the Project, the State with the aid and consent of FHWA will authorize the Arizona Eastern Railway Company to proceed with the work covered by the State Railroad Agreement and will request the maximum Federal Funds available.

c. Should some unforeseen conditions or circumstances increase the cost of said work required by a change in the extent of Scope of Work called for in this Agreement, the State shall not be obligated to incur any expenditure on behalf of the County, in excess of the amount referenced herein, unless and until so authorized in writing by the County and approved by the FHWA.

d. Upon execution of this Agreement invoice the County in the amount of $5,800.33 for the estimated cost of the Project.

2. The County shall:

a. Acquire any necessary right-of-way for this project and hereby certifies that all necessary rights-of-way have been or will be acquired.

b. Once acquired, remove from the County rights-of-way all obstructions or unauthorized encroachments of whatever nature, either above or below the surface of the roadway and hereby certifies that all obstructions and encroachments have been or will be removed.

c. Agree not to permit or allow any encroachments, except those authorized by permit, upon or private use of the County's right-of-way. In the event of any unauthorized encroachment or improper use, the County shall take all necessary steps to remove or prevent any such encroachment or use.

d. Upon completion of construction, be responsible to provide for at its own cost and as an annual item in its budget, proper maintenance, such maintenance (exclusive of maintenance by the Railroad Company of its Facilities), to include, but is not limited to, traffic signals, signs, islands, curbs and markings necessary for the purpose of regulating, warning and guiding traffic.

e. Be responsible to mark and sign railway-highway grade crossings in accordance with the requirements of the current edition of the Manual on Uniform Traffic Control Devises for Streets and Highways, within 45 days after the railroad has completed its work.

f. By such regulation as it may by ordinance provided be responsible to regulate parking and not permit vehicles to be left on the street in any manner other than at any parallel with the curb and to restrict parking to as to prevent conflicts with moving traffic.

g. Upon execution of this Agreement and upon receipt of an invoice from the State, remit to the State for the amount of $5,800.33 for the estimated cost of the Project.

III. MISCELLANEOUS PROVISIONS

1. This Agreement shall remain in full force and effect until completion of the work herein embraced; provided, however, that any provisions in this Agreement for maintenance shall be perpetual, unless assumed by another competent governmental entity

2. The State assumes no financial obligation or liability under this Agreement, or for any resulting construction project. The County, in regard to the County's relationship with the State only, assumes full responsibility for the design, plans, specifications, reports, the engineering in connection therewith and the construction of the improvements contemplated, cost over-runs and construction claims. Such assumption of the responsibility by the County for the benefit of the State in no way acts as a waiver by the County for the benefit of the railroad company or any responsibility the railroad company has in the design, plans, specifications, reports, the engineering in connection therewith and the construction or the improvements contemplating, cost overruns and construction claims. It is understood and agreed that the State's participation is confined solely to securing Federal Aid; that any damages arising from carrying out, in any respect, the terms of this Agreement or any modification thereof, shall be solely the liability of the County and that to the extent permitted by law, the County hereby agrees to save and hold harmless and indemnify from loss the State, any of its departments, agencies, officers or employees from any and all cost and/or damage incurred by any of the above and from any other damage to any person or property whatsoever, which is caused by any activity, condition, misrepresentation, directives, instruction or event arising out of the performance or nonperformance of any provisions of this Agreement by the County, any of its departments, agencies, officers and employees the County, any of its agents, officers and employees, or any of its independent contractors. Cost incurred by the State, any of its departments, agencies officers or employees shall include in the event of any action, court costs, and expenses of litigation and attorneys' fees.

3. The cost of construction and construction engineering work covered by this Agreement is to be borne by FHWA and the County, each in the proportion prescribed or as fixed and determined by FHWA as stipulated in this Agreement. Therefore, the County agrees to furnish and provide the difference between the total cost of the work provided for in this Agreement and the amount of Federal Aid received.

4. This Agreement shall be filed with the Arizona Secretary of State and shall not become effective until the date of said filing.

5. This Agreement may be cancelled in accordance with Arizona Revised Statutes § 38-511.

6. The provisions of Arizona Revised Statutes § 35-214 are applicable to all parties to this Agreement and all parties shall be afforded the same rights, interest and obligations..

7. In the event of any controversy, which may arise out of this Agreement, the parties hereto agree to abide by required arbitration as is set forth for public works contracts in Arizona Revised Statutes § 12-1518.

8. All notices or demands upon any party to this Agreement shall be in writing and shall be delivered in person or sent by mail, addressed as follows:

Arizona Department of Transportation Joint Project Administration 205 S. 17th Avenue, Mail Drop 616E Phoenix, Arizona 85007 (602) 712-7525 (602) 712-7424 Fax	Gila County Attn: Steve Sanders 1400 E. Ash Street Globe, AZ 85501 (928) 425-3231 X8530 (928) 425-8104 Fax

9. This Agreement is subject to all applicable provisions of the Americans with Disability Act (Public Law 101-336, 42 U.S.C. 12101-12213) and all applicable Federal regulations under the Act, including 28 CFR Parts 35 and 36. The parties to this Agreement shall comply with Executive Order Number 99-4 issued by the Governor of the State of Arizona and incorporated herein by reference regarding "Non-Discrimination".

10. Non-Availability of Funds: Every payment obligation of the State under this Agreement is conditioned upon the availability of funds appropriated or allocated for the payment of such obligations. If funds are not allocated and available for the continuance of this Agreement, this Agreement may be terminated by the State at the end of the period for which the funds are available. No liability shall accrue to the State in the event this provision is exercised, and the State shall not be obligated or liable for any future payments as a result of termination under this paragraph.

11. In accordance with Arizona Revised Statutes § 11-952 (D) attached hereto and incorporated herein is the written determination of each party's legal counsel and that the parties are authorized under the laws of this State to enter into this Agreement and that the Agreement is in proper form.

IN WITNESS WHEREOF, the parties have executed this Agreement the day and year first above written.

GILA COUNTY

By _____
JOSE M. SANCHEZ
Chairman of the Board

STATE OF ARIZONA
Department of Transportation

By _____
RAKESH TRIPATHI
Division Director

ATTEST:

By _____
STEVEN L. BESICH
Clerk of the Board

JPA 07-109

ATTORNEY APPROVAL FORM FOR THE GILA COUNTY

I have reviewed the above referenced Intergovernmental Agreement between the State of Arizona, acting by and through its DEPARTMENT OF TRANSPORTATION, and the GILA COUNTY, an Agreement among public agencies which, has been reviewed pursuant to A.R.S. § 11-951 through § 11-954 and declare this Agreement to be in proper form and within the powers and authority granted to the County under the laws of the State of Arizona.

No opinion is expressed as to the authority of the State to enter into this Agreement.

DATED this 24th day of November, 2008.

Bryan Chambers, Deputy County Attorney

When recorded,
return to:
Marian Sheppard, BOS
(12/9/08 #4)

RESOLUTION

No. 08-12-03

RESOLUTION AUTHORIZING THE GILA COUNTY BOARD OF SUPERVISORS TO SIGN AN INTERGOVERNMENTAL AGREEMENT WITH THE STATE OF ARIZONA, DEPARTMENT OF TRANSPORTATION, FOR JPA FILE NO. 07-1091, REGARDING APPROPRIATION STANDARDS FOR RAILROAD CROSSING RELATED APPURTENANCES ON BIXBY ROAD IN GILA COUNTY.

WHEREAS, the State is empowered by Arizona Revised Statutes §28-401 to enter into the above described Intergovernmental Agreement and has delegated to the undersigned the authority to execute this Agreement on behalf of the State.

WHEREAS, the County is empowered by Arizona Revised Statutes §48-572 to enter into this Agreement and has authorized the undersigned to execute this Agreement on behalf of the County.

NOW, THEREFORE, BE IT HEREBY RESOLVED that Gila County Board of Supervisors authorizes the chairman, José M. Sanchez, to execute the Intergovernmental Agreement for Arizona Department of Transportation JPA File No. IGA 07-1091 regarding appropriation standards for railroad crossing related appurtenances on Bixby Road in Gila County, and authorizes him to take all actions to carry out all provisions of the agreement.

PASSED and ADOPTED this 9th day of December, 2008.

GILA COUNTY BOARD OF SUPERVISORS:

José M. Sanchez, Chairman of the Board

ATTEST:

Steven L. Besich, Clerk of the Board

APPROVED AS TO FORM:

Bryan Chambers, Chief Deputy County Attorney

TERRY GODDARD
Attorney General

OFFICE OF THE ATTORNEY GENERAL
STATE OF ARIZONA

CIVIL DIVISION
TRANSPORTATION SECTION
Writer's Direct Line:
602.542.8837
Facsimile: 602.542.3646

INTERGOVERNMENTAL AGREEMENT DETERMINATION

A.G. Contract No. P0012008005567 (**IGA/JPA 07-109I**), an Agreement between public agencies, i.e., The State of Arizona and The Gila County, has been reviewed pursuant to A.R.S. § 11-952, as amended, by the Undersigned Assistant Attorney General who has determined that it is in the proper form and is within the powers and authority granted to the State of Arizona.

No opinion is expressed as to the authority of the remaining Parties, other than the State or its agencies, to enter into said Agreement.

DATED: December 31, 2008.

TERRY GODDARD
Attorney General

JAMES R. REDPATH
Assistant Attorney General
Transportation Section

JRR:ln:#366693
Attachment

Arizona Department of Transportation

Intermodal Transportation Division

206 South Seventeenth Avenue Phoenix, Arizona 85007-3213

Janet Napolitano
Governor

Victor M. Mendez
Director

Floyd Roehrich Jr.
State Engineer

January 13, 2009

Gila County
Attn: Steve Sanders
Deputy Director
Gila County Public Works
1400 East Ash Street
Globe, AZ 85501

RE: IGA/JPA File No.: 07-109I
AG Contract No.: P0012008005567
Project No: STP-000-6(151)P
Project: Flashers, Gates
Section: BIXBY RD (GILA CO) #742-364-Y
TRACS No.: SR 17001C
Budget Source Item No.:

Dear Mr. Sanders

Enclosed please find one fully conformed executed original Agreement for the above-mentioned Intergovernmental Agreement.

Should you have any questions, please do not hesitate to call at (602) 712-7785.

Sincerely,

Cindy Childers
Joint Project Coordinator
Engineering Consultant Section

cc: Project Manager

GILA COUNTY ATTORNEY

Bradley D. Beauchamp

Re: County Attorney's Office approval of IGA pursuant to A.R.S. § 11-952(D).

To whom it may concern:

The County Attorney's Office has reviewed the Intergovernmental Agreement attached to this agenda item and has determined that it is in its "proper form" and "is within the powers and authority granted under the laws of this state to such public agency or public procurement unit" pursuant to A.R.S. § 11-952(D).

Explanation of the Gila County Attorney's Office Intergovernmental Agreement (IGA) Review

A.R.S. § 11-952(D) requires that

> every agreement or contract involving any public agency or public procurement unit of this state . . . before its execution, shall be submitted to the attorney for each such public agency or public procurement unit, who shall determine whether the agreement is in proper form and is within the powers and authority granted under the laws of this state to such public agency or public procurement unit.

In performing this review, the County Attorney's Office reviews IGAs to see that they are in "proper form" prior to their execution. "Proper form" means that the contract conforms to fundamental contract law, conforms to specific legislative requirements, and is within the powers and authority granted to the public agency. It does not mean that the County Attorney's Office approves of or supports the policy objectives contained in the IGA. That approval is solely the province of the public agency through its elected body.

Likewise, this approval is not a certification that the IGA has been properly executed. Proper execution can only be determined after all the entities entering into the IGA have taken legal action to approve the IGA. There is no statutory requirement for the County Attorney's Office to certify that IGAs are properly executed.

Nonetheless, it is imperative for each public agency to ensure that each IGA is properly executed because A.R.S. § 11-952(F) requires that "[a]ppropriate action … applicable to the governing bodies of the participating agencies approving or extending the duration of the … contract shall be necessary before any such agreement, contract or extension may be filed or become effective." This can be done by ensuring that the governing body gives the public proper notice of the meeting wherein action will be taken to approve the IGA, that the item is adequately described in the agenda accompanying the notice, and that the governing body takes such action. Any questions regarding whether the IGA has been properly executed may be directed to the County Attorney's Office.

Proper execution of IGAs is important because A.R.S. § 11-952(H) provides that "[p]ayment for services under this section shall not be made unless pursuant to a fully approved written contract." Additionally, A.R.S. § 11-952(I) provides that "[a] person who authorizes payment of any monies in violation of this section is liable for the monies paid plus twenty per cent of such amount and legal interest from the date of payment."

The public agency or department submitting the IGA for review has the responsibility to read and understand the IGA in order to completely understand its obligations under the IGA if it is ultimately approved by the public entity's board. This is because while the County Attorney's Office can approve the IGA as to form, the office may not have any idea whether the public agency has the capacity to actually comply with its contractual obligations. Also, the County Attorney's Office does not monitor IGA compliance. Hence the public entity or submitting department will need to be prepared to monitor their own compliance. A thorough knowledge of the provisions of the IGA will be necessary to monitor compliance.

Before determining whether an IGA contract "is in proper form," the County Attorney's Office will answer any questions or concerns the public agency has about the contract. It is the responsibility of the public agency or department submitting the IGA for review to ask any specific questions or address any concerns it has about the IGA to the County Attorney's Office at the same time they submit the IGA for review. Making such an inquiry also helps improve the County Attorney's Office review of the IGA because it will help focus the review on specific issues that are of greatest concern to the public agency. Failing to make such an inquiry when the agency does have issues or concerns will decrease the ability of the County Attorney's Office to meaningfully review the IGA.

ARF-1679 **Regular Agenda Item 3- E**

Regular BOS Meeting

Meeting Date: 02/19/2013

Submitted For:	Don McDaniel Jr., County Manager	Submitted By:	Jacque Griffin, Asst. County Manager/Librarian, Asst County Manager/Library District
Department:	County Manager		
Fiscal Year:	2012-2013	Budgeted?:	No
Contract Dates Begin & End:	March 1, 2013 - June 30, 2013	Grant?:	No
Matching Requirement?:	No	Fund?:	Renewal

Information

Request/Subject

Arizona Local Employee Benefit Trust (AZLGEBT) Plan change in initial enrollment period.

Background Information

In 1999 Gila County joined the Arizona Local Employee Benefit Trust (AZLGEBT) Plan for employee insurance coverage. At that time, Gila County had a 90-day initial delay in enrollment requirement with the prior insurance carrier, which was continued forward into AZLGEBT for Gila County. The other five plan partners have a 30-day delay for initial enrollment.

Article II of the Plan Document, under section 2.02 Initial Enrollment: "All new employees will be covered on the first day of the month coinciding with, or immediately following the completion of thirty (30) days of full-time employment (exception: ninety (90) days for Gila County employees) provided proper enrollment has been made and any required contributions have been authorized."

In real terms, this means that an employee who is hired after the first day of a given month could actually have up to a 117-day delay in insurance coverage, depending on the hire date and the number of days in the following months. The other plan partners' employees could have up to a 59-day delay in insurance coverage, depending on the hire date and the number of days in the following months.

Evaluation

This 90-day delay in insurance coverage creates difficulty for the Plan administrators as well as creates unnecessary hardship on new employees. Additionally, The Health Care Reform Act has rules for initial enrollment periods that will limit all employers to under 60 days, beginning in January 2014. The AZLGEBT Plan document meets the new requirements, provided Gila County modifies our delay period to match the plan.

Changing the enrollment period will have the effect of allowing employees to be covered by employee insurance earlier, thereby giving them more timely access to

health insurance.

This change will also have a financial impact to the County since it provides employee insurance coverage two months earlier, which would increase the cost of coverage by two months to the tenure of any given employee.
This change will not negatively affect AZLGEBT since the Plan is already calculated using the shorter enrollment period. In speaking with the Plan administrators at Erin Collins and Associates, this change can become effective immediately since it brings Gila County into alignment with the Trust, and does not impact the re-insurance for large claims. By making this change at this time, it will ensure that the Plan documents for next fiscal year will incorporate the change.

Conclusion

Modifying Gila County's initial delay in enrollment requirement from the current ninety (90) days to match the rest of the counties within the AZLGEBT Plan has positive benefits for Gila County, the Trust, and the employees who participate. This change will bring Gila County into alignment with future Health Care Reform requirements, as well as matching the other Trust members' requirements, and allows employees to become eligible for health insurance within an appropriate time frame.

Recommendation

Staff recommends that the initial enrollment period for employee medical insurance be reduced from ninety (90) days to thirty (30) days as outlined in the AZLGEBT Plan document.

Suggested Motion

Information/Discussion/Action to change the Gila County initial enrollment period for employee medical insurance which currently includes a special exception of a ninety- (90) day period to, "All new employees will be covered on the first day of the month coinciding with, or immediately following the completion of thirty (30) days of full-time employment provided proper enrollment has been made and any required contributions have been authorized," to match the Arizona Local Employee Benefit Trust (AZLGEBT) Plan document, effective March 1, 2013. **(Jacque Griffin)**

ARF-1660 **Regular Agenda Item 3- F**

Regular BOS Meeting

Meeting Date: 02/19/2013

Submitted For:	Joseph Heatherly, Finance Director	Submitted By:	Dana Sgroi, Contracts Support Specialist, Finance Department
Department:	Finance Department		
Fiscal Year:	2013-2018	Budgeted?:	Yes
Contract Dates Begin & End:	April 2013 to March 2018	Grant?:	No
Matching Requirement?:	No	Fund?:	New

Information

Request/Subject

Approval of Amendment No. 1 to Software Contract with Colorado CustomWare, Inc.; & a Lease Purchase Agreement with Zions First National Bank

Background Information

On December 5, 2007, Gila County entered into a Master Services Agreement with Colorado CustomWare, Inc. (CCI) to purchase RealWare, FieldWare, and GeoWare software systems. The agreement allows for an annual payment that covers the right to use the software, as well as provides a maintenance agreement for the software.

Initially, the Arizona Department of Revenue (ADOR) had planned to build a new system with the help of a company called Manatron. This contract would have replaced the software in eleven counties, including Gila County. To fund the endeavor, ADOR had assessed each participating county an amount between $2.20 and $2.35 per parcel. That project failed and ADOR notified all counties that were participating in the project, that ADOR was not going to continue with a state system.

CCI responded to an RFP for software that would perform the tasks that the state system was capable of performing. The RFP was issued by Navajo County on behalf of themselves, Gila County, Santa Cruz County, Greenlee County and Apache County. These five counties did not have the ability to purchase the system outright, so it was agreed that CCI would absorb all of the front end costs, and license costs and combine them with an annual support cost. It was further agreed to spread that cost out over a ten year period. At the time of the initial Master Services Agreement, that cost was calculated on the initial per parcel amount of $2.20, that was assessed by ADOR in their failed project, with a per parcel rate increase of $0.05 per year to top out at $2.35 per parcel. To date, for the last five years, Gila County has been paying CCI, an annual average amount of $101,000, which includes an annual maintenance charge.

Gila County has five years remaining on the lease purchase of the CCI software.

Evaluation

Recently, CCI entered into an agreement with Zions First National Bank to finance the Software License Fees, in which Zions will pay a reduced amount of ten percent (10%) directly to CCI.

Per the terms of the proposed agreement from CCI, Gila County will pay CCI directly for the 2013-2014 year. CCI has reduced the annual payment for 2013-2014 of $101,233.30 by ten percent (10%), contingent on Gila County taking advantage of the financing offered by Zions First National Bank, thus the amount Gila County will pay for the 2013-2014 payment will be $91,109.99.

By Gila County entering into these agreements with CCI/Zions First National Bank for the remaining five years, the first year payment to CCI would be $91,109.99, thereafter, the payments would be split between CCI and Zions First National Bank for Maintenance Support of $28,523.78 and Lease Purchase of $62,586.22, respectfully. The contracts would extend through fiscal year 2017-2018, resulting in a total savings to Gila County of $ 50,616.55 or a ten percent (10%) overall savings.

Conclusion

It would serve Gila County to enter into an amendment with CCI, and, a Lease Purchase Agreement with Zions First National Bank for the remaining four years of the RealWare, FieldWare and GeoWare software systems. The County would realize a substantial monetary savings of $50,616.55.

Recommendation

County staff recommends accepting both CCI's Amendment No. 1 to the Software Contract, License; Clarification of Payment Terms; and Discount, *and*, the Lease Purchase Agreement proposed by Zions First National Bank. Acceptance of these documents results in a $10,123.31 annual savings to Gila County, with a total savings over 5 years of $50,616.55.

Suggested Motion

Information/Discussion/Action to approve Amendment No. 1 to Software Contract (which is an amendment to a Master Services Agreement) between Colorado CustomWare, Inc. (CCI) and Gila County; to approve a Lease Purchase Agreement between Zions First National Bank and Gila County whereby the County will realize an overall savings of $50,616.55 over a five-year period; and to adopt Resolution No. 13-02-04, which authorizes the approval of the Lease Purchase Agreement, all of which is needed for the Assessor's Office software package. **(Joe Heatherly)**

Attachments

Master Services Agreement between Gila County and Colorado Custom Ware Inc

Amendment 1 to Software Contract with Colorado CustomWare Inc

Lease Purchase Agreement with Zions First National Bank

Resolution 13-02-04

Anti-Terrorism Warranty and Legal Arizona Workers Act

Legal Explanation

Gila County, AZ
Linda Haught Ortega, Recorder
12/06/2007
12:49PM
Doc Code: AG

Doc Id: 2007-019856
Receipt #: 61164
Rec Fee: 0.00

BOARD OF SUPERVISORS

2007-019856
Page: 1 of 62
12/06/2007 12:49P
0.00

Gila County, AZ AG

When recorded deliver to:

Marian Sheppard, Chief Deputy Clerk
Gila County Board of Supervisors
(12/04/07 #3)

CAPTION HEADING:

Master Services Agreement
Between
Gila County
and
Colorado CustomWare, Inc.

DO NOT REMOVE

This is part of the official document

This Agreement, entered into as of this 5th day of December 2007, by and between The Board of Supervisors of GILA COUNTY, State of Arizona (hereinafter referred to as "COUNTY"), and Colorado CustomWare, Inc. doing business at 1109 Oak Park Drive, Suite 100, Fort Collins, CO 80525 (hereinafter referred to as "CONTRACTOR").

1. Identity of Parties

COLORADO CUSTOMWARE, INC., ("CONTRACTOR") is a Corporation duly and validly existing in good standing under the laws of the State of Colorado, and is duly qualified to own its properties and conduct its business.

GILA COUNTY ("COUNTY") is a government jurisdiction duly and validly organized and existing under the laws of the State of Arizona and is duly qualified to own its properties and perform municipal functions.

2. Structure of Agreement

This Agreement is awarded by COUNTY to CONTRACTOR, pursuant to its selection as the successful vendor to replace a COUNTY owned computerized system with a COMPUTER ASSISTED MASS APPRAISAL SYSTEM ("The System"). CONTRACTOR's response to the COUNTY's Request for Proposal, dated August 23, 2007, and the Price Proposal dated August 23, 2007, and all notices and specifications are incorporated herein by reference, and shall hereafter be referred to as "Response"(Exhibit C).

The parties are entering into this Agreement, which provides for the initial acquisition, installation, and maintenance support for one year of The System by CONTRACTOR. The one year maintenance will commence upon Final Acceptance of the System by the County. This will be known as "Phase One" of the Scope of Services. Once Phase One work is complete, the parties will commence with "Phase Two" of the Scope of Work, which will consist of continued annual maintenance support of The System by COLORADO CUSTOMWARE, INC., at the cost quoted by Contractor in Exhibit A, "CONTRACTOR'S Price Proposal", upon the County's annual written election.

3. Definitions

3.1. The System:

The subject matter of this Agreement is a COMPUTER ASSISTED MASS APPRISAL SYSTEM ("The System") to be provided by CONTRACTOR. The System is a complete and fully operational CAMA information system that conforms exactly to all standards and requirements set forth in the Functional Requirements Document (Exhibit B) within the projected time frame as set forth in Exhibit C Provider's Implementation Plan dated December 3, 2007, with the understanding that reasonable variations will be approved by the County's project Manager. The System is composed of the software, accompanying documentation, and services as set forth in Exhibit B, Exhibit C.

3.2. Standard Software:

"Standard Software" means executable applications or system software products, which are purchased in an "off-the-shelf" manner without modification to the source code of the application. "Standard Software" shall include products such as the non-proprietary operating systems, and any substitute or additional applications or operating systems consistent with meeting, or exceeding the functionality as stated in CONTRACTOR's Response, which may be acquired by COUNTY from CONTRACTOR. Standard Software may require extensive modification and configuration at levels other than the source code level prior to its use in business applications.

3.3. Custom Software:

"Custom Software" means application products, which are modified in a material way at the source code level prior to their normal use by the COUNTY.

3.4. Services:

"Services" means the labor performed by CONTRACTOR and any substitute or additional services, consistent with meeting, or exceeding the CONTRACTOR's representations as stated in CONTRACTOR's Response. COLORADO CUSTOMWARE, INC. shall be the Prime Contractor under this Agreement with respect to all services, software products and the application software set forth in Exhibit A. CONTRACTOR shall remain solely responsible for all performance under this Agreement with respect to all services as set forth in Exhibit A.

Contractor's address is:

Colorado CustomWare,Inc.
1109 Oak Park Drive, Suite 100
Fort Collins, CO 80525
Phone: (970) 223-6250
Toll free: (800) 806-7896
FAX: (970) 223-4204

3.5 Data Transfer File Formats

CONTRACTOR acknowledges that transfer of data to and from COUNTY's and Arizona Department of Revenue's, ("ADOR") data programs is fundamental to acceptable function of The System. The requirements of State statute, ADOR, and the EXHIBIT B will all be met.

2007-019856
Page. 3 of 62
12/06/2007 12:49P
Gila County, AZ RC 0.00

4. Scope of Services
CONTRACTOR will provide The System within the projected time frame as set forth in Provider's Implementation Plan - Exhibit C, with the understanding that reasonable variations will be approved by the County's Project Administrator.

CONTRACTOR will provide all personnel and labor, Software, Documentation, Services, and Deliverables required to install and fully implement The System in exact accordance with the CONTRACTOR's agreement in EXHIBIT B at no additional cost to the County beyond the attached Price Proposal (Exhibit A).

It is the intent of the parties that The System will operate in compliance with Arizona statutes and Arizona Department of Revenue guidelines. Contractor shall provide, at no cost to County additional to the costs in Exhibit A, (the Price Proposal), any Labor, Software, Documentation, and Services additional to or different from those set forth in the Exhibit B that may be required to fulfill this intent.

CONTRACTOR will provide continued annual maintenance and support services at COUNTY's election using the costs provided in the Subsequent Years Pricing Proposal (Exhibit A).

4.1 Time is of the essence
CONTRACTOR acknowledges and agrees that time is of the essence with respect to its performance of this Contract and completion of the Project.

CONTRACTOR acknowledges and agrees that the County will incur costs for each day beyond the cutover date listed in exhibit C that The System is not operational. The parties acknowledge and agree that the amount of costs incurred by the County due to such delay will be extremely difficult to fund. The parties agree that One Hundred and Fifty Dollars ($150) for each day constitutes a reasonable estimate of the costs the County will incur as a result of such a delay, which monies shall be deducted from the payments in paragraph 7. The COUNTY's retention of such liquidated costs shall not limit, alter, or affect any other legal remedy the County may have for breach of this Contract, and the County shall have the right to seek delay damages from Provider in addition to any liquidated damages incurred by Provider pursuant to this Section.

CONTRACTOR shall be entitled to a reasonable extension of the time of performance, the length of which shall be determined by the COUNTY and shall not be unreasonably withheld, for delays to its performance that are in no way the fault or responsibility of CONTRACTOR, including delays caused by the COUNTY; provided, however, that no such extension shall be granted unless a written request, setting forth in reasonable detail the grounds therefore, is received by the COUNTY within ten (10) calendar days following the events giving rise to such alleged delay. CONTRACTOR's sole and exclusive remedy for costs or damages arising from any delay to its performance, whether or not caused by any act or omission of the COUNTY, shall be an extension of the time of performance; and in no event shall CONTRACTOR be entitled to payment or compensation of any kind from the COUNTY for any such costs or damages, including, without limitation, costs or damages related to or resulting from acceleration of the work, loss of productivity, field or home office overhead, or loss of profit, whether related to this Agreement or to any other work or contract, actual or potential, of CONTRACTOR..

In the event that either party is unable to perform any of its obligations under this Contract, or to enjoy any of its benefits, because of natural disaster, any act of God, war, civil disturbance, or court order, (hereinafter referred to as a "Force Majeure Event"), the party that has been so affected shall immediately give notice to the other party; and shall exercise every commercially reasonable effort to resume performance. CONTRACTOR shall not be in default if any event of default as provided herein is the result of a Force Majeure Event and its occurrence is without the fault or negligence of CONTRACTOR. The COUNTY shall not be liable to CONTRACTOR for any failure to perform any of its obligations under the Contract if such failure is the result of a Force Majeure Event.

4.2 Final Acceptance
CONTRACTOR shall notify the COUNTY in writing that all Phase One Work has been fully performed, and The System is ready for Final Acceptance Test(s). The System shall not be Finally Accepted unless and until all of the following conditions are satisfied:

The System and COUNTY programs function together as an integrated whole, with data transfer between The System, COUNTY programs and the ADOR program;

The System has the ability to successfully produce valuation notices; and

The System successfully completes a Reliability Period without failure or interruption for a period of thirty (30) consecutive calendar days, commencing on the day following the first successful production of valuation notices. In the

2007-019856
Page: 4 of 62
12/06/2007 12:49P
Gila County, AZ RG D.00

event The System suffers any major failure or interruption prior to the expiration of such period, CONTRACTOR shall remedy the failure and the defects that caused the interruption, and a new thirty (30) consecutive calendar day Reliability Period (the "Second Reliability Period") shall begin on the day that Provider notifies the County that the remedy has been completed. A major failure or interruption shall be defined as an error that:

"Prevents critical business process from functioning or data corruption.
Is legislative related or deadline oriented.
Is a key component failure and there is no workaround.

(Failures or errors that are related to data corruption caused by the County will not trigger this clause or cause a delay in acceptance testing.) In the event the Software does not successfully complete the Second Reliability Period without any Material Defect or Material Failure, the County may, at its sole discretion, proceed in accordance with Section 19 and exercise any remedy provided therein.

The first date the system becomes "operational and in use" will serve as the anniversary date for purposes of Maintenance and Support and is unrelated to acceptance testing.

4.3 Use or Payment Shall Not Constitute Acceptance; Project Schedule Not Waived
In no event shall the operation or use of any portion of The System by the COUNTY prior to Final Acceptance, whether for production, testing or other evaluation, revenue, or any other purpose, constitute Final Acceptance. In no event shall payment by the COUNTY constitute Acceptance of the work paid for, or in any way limit, alter, or waive any of the COUNTY'S rights or CONTRACTOR'S obligations. Nothing contained in this Article shall limit, alter, or excuse Provider's obligations to perform in accordance with the Project Schedule.

5. Certification of Funds / Budget and Fiscal Provisions
This Agreement is subject to the budget and fiscal provisions of the COUNTY.

This Agreement will terminate without penalty at the end of any fiscal year in which funds are not appropriated for the following fiscal year. If funds are appropriated by the COUNTY for payment under this Agreement for a portion of the following fiscal year, this Agreement will terminate without penalty at the end of the term for which those funds are appropriated. Termination will be handled in the manner specified in Section 19.1, "Termination by CONTRACTOR for Default".

This Section 5 serves to control any and all other provisions of the Agreement.

6. Term Of Agreement
The term of Agreement shall be through the performance term of the contract.

7. Compensation
Payment under this Agreement shall be as follows:
50% upon full execution of this agreement ($47,122),
40% payable upon date of first use of the System by COUNTY ($37,698 minus any amounts for liquidated damages as provided in section 4.1), and 10% ($9,424) upon final acceptance of the system.
TOTAL Phase One payments: $94,244
In consideration of the Phase One sum, CONTRACTOR agrees to provide the COUNTY all software, services, and any materials required for the installation and implementation of The System, and the first year of support and maintenance.

8. Accounting and Payment for CONTRACTOR Services

Each party's "Contract Administrators" under this Agreement shall be:

For the COUNTY:
Dale Horn, Gila County Assessor

For the CONTRACTOR:
Lori D. Schlotter

Each party may change its designated Contract Administrator by serving written notice of such change, that notice being signed by the current Contract Administrator or Contracting Officer, and delivering such notice to the other party.

Each party's "Contracting Officer" under this Agreement shall be the individual or official who executes this Agreement or that individual's or official's designee.

CONTRACTOR invoices are due and payable in full within thirty (30) days of receipt of invoice. The COUNTY shall notify the CONTRACTOR of any invoice disputes within fifteen (15) business days of receipt of invoice.

9. Defective Work, Third Party Claims
The COUNTY may, in its sole discretion, withhold a part of any payment on account of defective Software or other work furnished, if the defect(s) is/are not fully remedied within thirty (30) calendar days of the COUNTY's written notice to CONTRACTOR of the defect(s), or such longer time as CONTRACTOR and the COUNTY may agree

2007-019856
Page: 5 of 62
12/06/2007 12:49P
Gila County, AZ AG 0.00

upon in writing. In the event a subcontractor or supplier to CONTRACTOR or other third party asserts a claim against CONTRACTOR and/or the COUNTY arising from the subject of this agreement, the COUNTY may, in its sole discretion, withhold any payment, in whole or in part, unless CONTRACTOR provides reasonable evidence that a legitimate dispute, relating to this project, exists between CONTRACTOR and the third party. CONTRACTOR shall reimburse the COUNTY for any payments the COUNTY is required to pay to the third party upon the COUNTY's written notice to CONTRACTOR of such payment. The obligations of any surety under any performance or labor and materialman's bond furnished under this agreement shall in no way be limited, altered, or excused by the COUNTY's failure to withhold monies from CONTRACTOR.

10. Warranty; Warranty Standards
CONTRACTOR warrants that for a period of Twelve (12) months following the County's Final Acceptance of The System all Software, Documentation, Services, and Deliverables furnished for the Project, whether by itself or by its Subcontractors and suppliers, shall be free from defects and errors in material, design, workmanship, and execution, and shall function together as an integrated system in conformance with the descriptions of functionality and performance, and all standards of performance that are set forth in this Contract and the manufacturer's (including, without limitation, Provider's, where applicable) most current published specifications for all Software, and Deliverables. If the last day of the Warranty Period falls on a Saturday, Sunday, national holiday, state holiday, or County holiday, the Warranty Period shall be deemed to be extended until midnight of the next business day. Viruses that are contained in the Software or any component thereof as delivered and installed (but not Viruses that are introduced subsequent to installation through no fault of Provider) shall be deemed to be defects and errors in material, design, workmanship, or execution under this Section.

10.1 Defects and Errors
During the Warranty Period, at no cost to the County, CONTRACTOR shall furnish all materials and services (including, without limitation, all diagnosis and analysis of problems and defects) necessary to address and begin corrective action on any defects and errors in the Software, Documentation, Services, and Deliverables furnished in accordance with the Warranty Standards within one business day following notice by the County, which notice may be by telephone, computer modem, or facsimile.

11. Cooperative Purchasing
CONTRACTOR shall make The System available to any other state or local government jurisdiction within the State of Arizona, under the same terms and conditions (with the exception of pricing, incentives and scheduling timelines) of this Agreement, for a period of twenty-four (24) months from the date of execution hereof.

12. Modifications
Either party may request modifications to this Agreement. Any agreed to modification which does not increase the total amount payable under the Agreement will become effective only when approved in writing by each party's designated Contract Administrator. Any modification, which does increase the total amount payable, must be agreed to in writing and fully executed as an amendment to this Agreement by the Contracting Officers with all the formalities of the original.

13. Assignment and Subcontracting
With the prior written consent of the COUNTY's Contract Administrator, which consent shall not be unreasonably withheld, the CONTRACTOR may assign this Agreement including the proceeds hereof, provided that such assignment shall not operate to relieve the CONTRACTOR of any of its duties and obligations hereunder, nor shall such assignment affect any remedies available to the COUNTY that may arise from any breach of the sections of this Agreement, its supplements, or warranties made herein including but not limited to, rights of set off.
This Agreement or any portion thereof may not be excluded from any acquisition or assignment of CONTRACTOR in whole or in part, or any assets of CONTRACTOR related to the performance of this Agreement. Should any such acquisition or assignment take place, the COUNTY still retains the right to refuse assignment of this Agreement per provisions above.

With the prior written consent of the CONTRACTOR, which consent shall not be withheld unreasonably, the COUNTY may assign this Agreement to any public agency, commission, board, or the like, within the political boundaries of the State of Arizona, provided that such assignment shall not operate to relieve the COUNTY of any of its duties and obligations hereunder.

14. Independent Contractor
The CONTRACTOR's services shall be furnished by the CONTRACTOR as an "Independent Contractor", and nothing herein contained shall be construed to create a relationship of employer-employee or master-servant. All payments made hereunder and all services performed shall be made and performed

2007-019856
Page: 6 of 62
12/06/2007 12:4
Gila County, AZ RC 0.00

pursuant to this Agreement by the CONTRACTOR as an Independent Contractor.

The CONTRACTOR acknowledges that the CONTRACTOR is not entitled to any COUNTY benefits including, but not limited to: vacation pay, holiday pay, sick leave pay, medical, dental, or other insurance benefits, or any other rights or privileges afforded to COUNTY employees.

CONTRACTOR will defend, indemnify and hold harmless the COUNTY, its officers, agents or employees from any loss or expense, including but not limited to settlements, judgments, set-offs, attorneys' fees or costs incurred by reason of claims or demands because of breach of the provisions of this paragraph.

15. No Guarantee of Employment
The performance of all or part of this Agreement by the CONTRACTOR shall not operate to vest any employment rights whatsoever and shall not be deemed to guarantee any employment of the CONTRACTOR or any employee of the CONTRACTOR or any Subcontractor or any employee of any Subcontractor by the COUNTY at the present time or in the future.

16. Taxes
The CONTRACTOR understands and acknowledges that the COUNTY will not withhold Federal or State income taxes. Where required by State or Federal law, the CONTRACTOR authorizes the COUNTY to make withholding for any taxes other than income taxes (i.e., Medicare). All compensation received by the CONTRACTOR will be reported to the Internal Revenue Service at the end of the calendar year in accordance with the applicable IRS regulations. It is the responsibility of the CONTRACTOR to make the necessary estimated tax payments throughout the year, if any, and the CONTRACTOR is solely responsible for any tax obligation arising from the CONTRACTOR's performance of this Agreement. The CONTRACTOR hereby agrees to indemnify the COUNTY against any demand to pay taxes arising from the CONTRACTOR's failure to pay taxes on compensation earned pursuant to this Agreement.

The COUNTY will pay sales and use taxes imposed on goods or services acquired hereunder as required by law. The CONTRACTOR must pay all other taxes including, but not limited to: Business and Occupation Tax, taxes based on the CONTRACTOR's gross or net income, or personal property to which the COUNTY does not hold title. The COUNTY is exempt from Federal Excise Tax.

17. Regulations and Requirements
This Agreement shall be subject to all laws, rules, and regulations of the United States of America, the State of Arizona, and political subdivisions of the State of Arizona. CONTRACTOR, its agents, employees or Subcontractors shall conform in all respects with physical, fire or other published security regulations while on the COUNTY's premises.

18. Right to Review
The CONTRACTOR agrees that an authorized representative of the COUNTY shall, until the expiration of three (3) years after contract termination and upon reasonable notice, have access to and the right to examine any pertinent books and records of the CONTRACTOR involving transaction(s) related to the performance of this Agreement.

19 Termination

19.1 Termination for Default
Any of the following occurrences shall constitute grounds for either party, at its option, to terminate the Agreement for default: if either party fails to perform any of the obligations of the Agreement; becomes insolvent; is declared bankrupt; commits any act of bankruptcy or insolvency; makes an assignment of this Agreement for the benefit of creditors; failure of CONTRACTOR to pay any of its subcontractors. Either party may, if the default has not been cured following a thirty (30) day written notice, terminate the Agreement, and at either party's option, obtain performance of the work elsewhere.

If a notice of termination for default has been issued and it is later determined for any reason that the notified party was not in default, the rights and obligations of the parties shall be the same as if the notice of termination had been issued pursuant to the Termination for Public Convenience paragraph hereof.

If either party violates any material term or condition of this Agreement or fails to fulfill in a timely and proper manner its obligations under this Agreement, then the offending party will receive written notice of such failure or violation. The offending party shall correct the violation of failure within thirty (30) calendar days or as otherwise mutually agreed. If the failure or violation is not corrected the Agreement may be terminated immediately by written notice. The option to terminate shall be at the sole discretion of either party.

19.2 Termination for Public Convenience
This contract is subject to the cancellation provisions of A.R.S. § 38-511. The COUNTY may terminate this Agreement in whole or in part whenever the COUNTY determines, at its sole discretion that such termination is in the best interests of the COUNTY. Whenever the Agreement is terminated in accordance with this paragraph, the CONTRACTOR shall be entitled to

2007-019856
Page: 7 of 62
12/06/2007 12:49P
Gila County, AZ AG 0.00

payment for actual work performed at unit contract prices for completed items of work. An equitable adjustment in the contract price for partially completed items of work will be made, but such adjustment shall not include provision for loss of anticipated profit on deleted or uncompleted work. Termination of this Agreement by the COUNTY at any time during the term, whether for default or convenience, shall not constitute a breach of contract by the COUNTY.

20. Withholding Payment

In the event the COUNTY's Contract Administrator determines that the CONTRACTOR has failed to perform any obligation under this Agreement within the times set forth in this Agreement, providing the lack of performance has not been caused by COUNTY's failure to perform its duties and responsibilities under this Agreement, then the COUNTY may withhold payments from amounts otherwise due and payable to CONTRACTOR. To the extent that the disputed obligation does not impede the progress or completion of other obligations, the amount that can be withheld by COUNTY is limited to the amount specified for that obligation in the Payment Schedule specified in Exhibit C – Payment Schedule. Withholding under this clause shall not be deemed a breach entitling CONTRACTOR to terminate or seek damages, provided that the COUNTY promptly gives notice in writing to the CONTRACTOR of the nature of the default or failure to perform, and in no case more than 10 days after it determines to withhold amounts otherwise due. A determination of the COUNTY's Contract Administrator set forth in a notice to the CONTRACTOR of the action required and /or the amount required to cure any alleged failure to perform shall be deemed conclusive, except to the extent that the CONTRACTOR acts within the times and in strict accord with the provisions of the Disputes clause of this Agreement. The COUNTY may act in accordance with this clause, without prejudice to any other remedy.

21. Defense and Indemnity Agreement

TO THE FULLEST EXTENT PERMITTED BY LAW, CONTRACTOR AGREES TO INDEMNIFY, DEFEND AND HOLD HARMLESS GILA COUNTY, A BODY POLITIC AND CORPORATE OF THE STATE OF ARIZONA, IT'S BOARD MEMBERS, OFFICERS, EMPLOYEES, AGENTS AND OTHER OFFICIALS **(HEREAFTER CALLED "COUNTY") FROM AND AGAINST ALL CLAIMS, DAMAGES, LOSSES, AND EXPENSES, INCLUDING BUT NOT LIMITED TO ATTORNEYS' FEES, COURT COSTS, OR OTHER ALTERNATIVE DISPUTE RESOLUTION COSTS ARISING OUT OF, RESULTING FROM, OR OTHERWISE BUT FOR THE USE OF THE "COUNTY" PROPERTY FOR PROVIDING CONSULTING SERVICES TO GILA COUNTY, ARIZONA; PROVIDED THAT ANY SUCH CLAIM, DAMAGE, LOSS OR EXPENSE IS ATTRIBUTABLE TO BODILY INJURY, SICKNESS, DISEASE, DEATH, OR PERSONAL INJURY, OR PROPERTY DAMAGE, INCLUDING THE LOSS OF USE OR DIMUNITION IN VALUE RESULTING THEREFROM; BUT ONLY TO THE EXTENT CAUSED IN WHOLE OR IN PART BY THE ACTUAL OR ALLEGED NEGLIGENT ACTS, ERRORS, OR OMISSIONS OF CONTRACTOR, OR ANYONE FOR WHOSE ACTS CONTRACTOR MAY BE LIABLE.** GILA COUNTY **RESERVES THE RIGHT, BUT NOT THE OBLIGATION, TO PARTICIPATE IN DEFENSE WITHOUT RELIEVING CONTRACTOR OF ANY OBLIGATION HEREUNDER.**

It is further provided that no liability will attach to the COUNTY by reason of entering into this Agreement, except as expressly provided herein.

22. Insurance

Unless otherwise approved by the County's Risk Manager in writing, prior to commencing work on the Provider shall, at its sole cost and expense, procure and maintain in full force and effect, covering the performance of the Services and Deliverables required under this Contract, the types and minimum limits of insurance specified below. All insurance shall be procured from reputable insurers authorized to do business as acceptable to the County. All insurance required herein, except the Professional Liability Insurance, shall be written on an "occurrence" basis and not a "claims-made" basis. In no event shall work be performed until the required evidence of insurance has been furnished. The insurance shall provide for at least thirty (30) days prior written notice to be given to the County in the event coverage is materially changed, cancelled or non-renewed. The County of Gila, its officers,

2007-019856
Page: 8 of 62
12/06/2007 12:48P
Gila County, AZ RG 0.00

employees and agents shall be named as additional insured's on the General Liability Insurance policy. An endorsement is required stating that the coverage afforded the County and its officers, employees and agents, as additional insured's, will be primary to any coverage available to them and that no act or omission of the County shall invalidate the coverage. Cancellation or non-renewal of any insurance policy required hereunder, in the absence of replacement of the policy in amounts that satisfy the contract, is a breach of this agreement.

COVERAGE AFFORDED - LIMITS OF LIABILITY

Workers' Compensation Statute

Commercial General Liability
$1,000,000 each occurrence
$2,000,000 aggregate

Automobile Liability Insurance
$500,000 combined single limit
including: Non-owned, Leased
& Hired Vehicles

Professional Liability including
$1,000,000
Errors & Omissions coverage

B. INSURANCE CONDITIONS

1. **GENERAL CONDITIONS:** The Contractor agrees to, at its own expense, purchase and maintain at all times during the life of this contract the herein stipulated minimum insurance with companies duly licensed, possessing a minimum current A.M. Best, Inc. Rating of B++8, or approved unlicensed companies in the State of Arizona with policies and forms satisfactory to GILA COUNTY. All policies will contain an endorsement providing that written notice be given to the County at least ten (10) calendar days prior to termination, cancellation or reduction in coverage in any policy.

2. **WAIVER OF SUBROGATION OR TRANSFER OF RIGHTS OF RECOVERY:** The policies required herein, except Workers' Compensation and Professional Liability, shall contain a waiver of subrogation or in the alternative, a waiver of transfer of rights of recovery against GILA COUNTY, its agents, representatives, officers, directors, officials and employees for any claims arising out of the Contractor's work or service.

3. **ADDITIONAL INSUREDS:** The insurance policies required by this Contract, except Workers' Compensation and Professional Liability, shall name GILA COUNTY, its agents, representatives, officers, directors, officials and employees as Additional Insured's with a CG 20 10 or similar endorsement. The Contractor agrees that the insurance required herein will be primary and that any insurance carried by the County will be excess and not contributing.

4. **ENDORSEMENTS AND CERTIFICATE:** The following provisions are also required for the insurance(s), and evidence of such shall be satisfied by Certificate(s) and Endorsements. An insurance company authorized to transact business in the State of Arizona shall issue the Certificates. The Contractor shall, within ten (10) days after award of bid, furnish the County with Certificates of Insurance for the required insurance coverage. Endorsements for the Waiver of Transfer of Rights and Additional Insured's shall be provided as indicated above, unless contained within the basic policy(ies) and then confirmed by written statement signed by the insurance agent, broker and/or underwriter in a form acceptable to the County.

"GILA COUNTY, a body politic and corporate of the State of Arizona, its Board members, officers, employees, agents, and other officials" shall be listed as the certificate holder. If room does not permit, this verbiage can be entered into the description of operations. However, if the latter method is used, **the certificate holder shall be listed only as GILA COUNTY, Globe, AZ 85501.**

2007-019856
Page: 9 of 62
12/06/2007 12:49P
Gila County, AZ RG 0.00

5. **PROFESSIONAL LIABILITY:** Professional liability insurance carried by the consultant must cover all elements of the project including professional services performed by subcontractors. If the consultant's professional liability insurance does not provided coverage for work performed by subcontractors, separate project insurance will be required to comply with the professional liability insurance requirement. The County may require a copy of the professional liability insurance policy to verify coverage.

23. Evidence of Insurance Coverage

Certificates of insurance evidencing the required coverage's must specifically reference the County contract number for which they are being submitted. The original certificate of insurance must be submitted to the County's Risk Manager at the following address:

Risk Management Division

Debra Williams, Risk Management Analyst
5515 S Apache Suite 400
Globe, Arizona 85501
928-402-8763

A copy of the certificate of insurance shall be submitted to the County's Project Manager at the address set forth in Section 17.16, *Notices*. Both submissions must be made at least ten (10) days before work is begun and at least ten (10) days before each Additional Term. The ten (10) day requirement for advance documentation of coverage may be waived in situations where such waiver will, in the sole judgment of the County's Risk Manager, benefit the County; but under no circumstances shall Provider actually begin work (or continue work, in the case of an Additional Term) without providing the required evidence of insurance. The endorsement adding the County as an additional insured must specifically reference the County contract number and be submitted to the County's Risk Manager at the above address. The County reserves the right to require Provider to furnish certified copies of the original policies of all insurance required under the Contract at any time upon (10) days written notice to Provider.

24. Self-Insurance

Provider may not self-insure any of the coverage's required under the Contract without the prior written approval of the County's Project Manager and the County's Risk Manager. In the event that Provider desires to self-insure any of the coverage's listed above, it shall submit to the County's Project Manager and the County's Risk Manager, prior to the commencement of Services and Deliverables hereunder, a certified copy of Provider's most recent audited financial statement, and such other evidence of its qualifications to act as a self-insurer (e.g., state approval) as may be requested by the County's Project Manager and/or the County's Risk Manager. In the event such approval, is granted, it is understood and agreed that the County, its officers, employees, and agents, shall be entitled to receive the same coverage's and benefits under Provider's self-insurance program that they would have received had the insurance requirements been satisfied by a reputable insurance carrier authorized to do business in the Commonwealth of Pennsylvania or otherwise acceptable to the County. If at the time of commencement of the Initial Term of the Contract, Provider self-insures its professional liability and/or workers' compensation and employers' liability coverage, Provider may, in lieu of the foregoing, furnish to the County a current copy of the state certification form for self-insurance or a current copy of the State Insurance Commissioner's letter of approval, whichever is appropriate. The insurance (including self-insurance) requirements set forth herein are not intended and shall not be construed to modify, limit, or reduce the indemnifications made in the Contract by Provider to the County, or to limit Provider's liability under the Contract to the limits of the policies of insurance (or self-insurance) required to be maintained by Provider hereunder.

25. Venue and Choice of Law

In the event that any litigation should arise concerning the construction or interpretation of any of the terms of this Agreement, the venue of such action of litigation shall be in the courts of the State of Arizona in and for the COUNTY. CONTRACTOR specifically consents to personnel and subject jurisdiction of said court. This Agreement shall be governed by the laws of the State of Arizona.

26. Patent/Copyright Infringement

CONTRACTOR will defend and indemnify the COUNTY from any claimed action, cause or demand brought against the COUNTY, to the extent such action is based on the claim that products furnished hereunder by the CONTRACTOR infringes any U.S. patent or copyright. The CONTRACTOR will pay those costs and damages attributable to any such

2007-019856
Page: 10 of 62
12/06/2007 12:48P
Gila County, AZ RG 0.00

claims that are finally awarded against the COUNTY in any action. Such defense and payments are conditioned upon the following:

That CONTRACTOR shall be notified promptly in writing by COUNTY of any notice of such claim.

CONTRACTOR shall have the right, in the event such claim of infringement is made, at its option and expense, to obtain for the COUNTY the right to continue using the products, or replace or modify the products so that they become non-infringing provided no reduction in performance or loss results to the COUNTY. CONTRACTOR shall not have any liability if the alleged infringement is based upon the COUNTY's use or sale of CONTRACTOR-furnished products, in combinations with other products or devices not furnished by the CONTRACTOR, or modifications made by the COUNTY or by the CONTRACTOR to the COUNTY's specifications, if such combinations or modifications cause the products furnished by CONTRACTOR to become infringing.

27. Disputes
Time is of the essence in this Agreement. Differences between the CONTRACTOR and the COUNTY, arising under and by virtue of the Contract Documents shall be brought to the attention of the CONTRACTOR and the COUNTY at the earliest possible time in order that such matters may be settled or other appropriate action promptly taken. CONTRACTOR and the COUNTY will make best efforts to resolve any disputes in a timely manner.

28. Ownership of Items Produced
All writings, data, public records or other materials prepared by the CONTRACTOR and/or its consultants or Subcontractors, in connection with performance of this Agreement shall be the sole and absolute property of the COUNTY. This paragraph does not apply to application software offered or any documentation related to application software for sale, license or lease to other customers, nor to systems software.

29. Confidentiality
The CONTRACTOR, its employees, Subcontractors, and their employees shall maintain the confidentiality of all information provided by the COUNTY or acquired by the CONTRACTOR in performance of this Agreement, except upon the prior written consent of the COUNTY Legal Counsel or an order entered by a court after having acquired jurisdiction over the COUNTY. CONTRACTOR shall immediately give to the COUNTY notice of any judicial proceeding seeking disclosure of such information. CONTRACTOR shall indemnify and hold harmless the COUNTY, its officials, agents or employees from all loss or expense, including, but not limited to settlements, judgments, set-offs, reasonable attorneys' fees and costs resulting from CONTRACTOR's breach of this provision.

This section does not impose any obligation on the CONTRACTOR if the information is: (i) publicly known at the time of disclosure; (ii) already known to the receiving party at the time it is furnished to the CONTRACTOR; (iii) furnished by the COUNTY to others without restrictions on its use or disclosure; or (iv) independently developed by the receiving party without use of the proprietary information.

30. Notice
Except as set forth elsewhere in the Agreement, for all purposes under this Agreement, except service of process, notice will be given by CONTRACTOR to the COUNTY's Contract Administrator, with copy to the COUNTY's Purchasing Department at the addresses stated below. Notice to CONTRACTOR for all purposes under this Agreement will be given to CONTRACTOR's Contract Administrator at the address stated below. Notice may be given by delivery or by depositing in the US Mail, first class, postage prepaid. All notices will be deemed to have been given upon mailing of the notice by certified mail return receipt requested to the respective party addressed as specified in this section. Either party may change the address, fax number, or the person to whom the notice is to be directed by forwarding to the other party a notice, which complies with this section.

COUNTY's Contract Administrator:
Dale Horn, Gila County Assessor
Address:
1400 E Ash Street
Globe, Arizona 85501

Telephone:
928-402-8710

FAX:
928-402-0408

COUNTY Purchasing Department:
Misti Williams

Address:
1400 E Ash Street
Globe, Arizona 85501

Telephone:
928-402-8745

FAX: 928-425-7056

CONTRACTOR'S Contract Administrator

2007-019856
Page: 11 of 62
12/06/2007 12:49P
Gila County, AZ RC 0.00

Lorri Marshall

Address:
1109 Oak Park Drive Suite 100
Fort Collins, CO 80525

Telephone:
(970) 212-4056

FAX:
(970) 223-4204

31. Waiver
Waiver of any breach or condition of this Agreement shall not be deemed a waiver of any prior or subsequent breach. No term or condition of this Agreement shall be held to be waived, modified or deleted except by an instrument, in writing, signed by the parties hereto.

32. Quiet Possession and Usage
The COUNTY upon paying the amounts due hereunder and performing all other covenants, terms and conditions on its part to be performed hereunder, may and will peacefully and quietly have, hold, possess, and benefit from The System for the term provided without suit, molestation or interruption.

With the execution of the Master Software License and Support Agreement, CONTRACTOR grants to COUNTY a perpetual non-exclusive license to use the CONTRACTOR's software delivered pursuant to this Agreement subject to compliance by COUNTY with all of its Agreements with CONTRACTOR, but regardless of COUNTY's exercise of its options to continue or renew the Master Software License and Support Agreement. CONTRACTOR or Subcontractor as applicable shall retain full and perpetual ownership rights to the software, with COUNTY having only those rights specifically provided in writing by the Master Software License and Support Agreement. COUNTY hereby acknowledges that the same or similar software may be sold, licensed or leased by CONTRACTOR to other users or agents.

The license of the software by CONTRACTOR to the COUNTY includes a clear license to the software with a perpetual non-exclusive right of the COUNTY to use the software in the COUNTY's jurisdiction.

CONTRACTOR hereby agrees to permit COUNTY to make copies of the software for backup purposes. COUNTY hereby agrees not to make copies for sale, distribution, or any purpose other than its own internal use. COUNTY may not sell, lease, transfer, assign, or license the software to a third party without prior written permission from CONTRACTOR. COUNTY agrees not to remove statements of copyrights, trade secrets, or proprietary rights which appear in the software or documentation. COUNTY also agrees to take such reasonable steps as required or requested by CONTRACTOR from time to time in order to protect CONTRACTOR's rights in the software.

33. Implementation Team
The personnel identified, as part of the COUNTY's/ CONTRACTOR's implementation team(s) may not be changed without the CONTRACTOR's/COUNTY's immediate notice in writing. The team members will be mutually agreed upon and listed as the first implementation task following the signing of this Agreement

34. Limitation of Liability
Except as provided in other sections of this agreement, the parties agree that neither the CONTRACTOR nor the COUNTY shall be liable to each other, regardless of the form of action, for consequential, incidental, indirect or special damages except a claim or demand based on patent or copyright infringement, in which case liability shall be as set forth elsewhere in this Agreement. This section does not modify any sections regarding retainages or any other such conditions as are elsewhere agreed to herein between the parties.

Neither the CONTRACTOR nor the COUNTY shall be liable for damages arising from causes beyond the reasonable control and without the fault or negligence of either the CONTRACTOR or the COUNTY. Such causes may include, but are not restricted to, acts of God or of the public enemy, acts of a governmental body other than COUNTY acting in either its sovereign or contractual capacity, war, explosions, fires, floods, earthquakes, epidemics, quarantine restrictions, strikes, freight embargoes, and unusually severe weather; but in every case the delays must be beyond the reasonable control and without fault or negligence of the CONTRACTOR, the COUNTY, or their respective Subcontractors.

If delays are caused by a Subcontractor without its fault or negligence, neither the CONTRACTOR nor the COUNTY shall be liable for damages for delays, unless the Equipment, Software, or Services to be furnished by their Subcontractors were obtainable on comparable terms from other sources in sufficient time to permit the CONTRACTOR or the COUNTY to meet its required performance schedule.

Neither party shall be liable for personal injury to the other party or physical damage to the other party's property except personal injury or damage to property proximately caused by such party's respective fault or negligence.

2007-019856
Page: 12 of 62
12/06/2007 12:49P
Gila County, AZ RG 0.00

Except for claims of personal injury and breaches of confidentiality obligations contained in this Agreement, CONTRACTOR and COUNTY liability for all damages shall not exceed the total value of this Agreement.

35. Subpoena
In the event that a subpoena or other legal process commenced by a third party, in any way concerning the Equipment or Related Services provided pursuant to this Agreement is served upon CONTRACTOR or COUNTY, such party agrees to notify the other party in the most expeditious fashion possible following receipt of such subpoena or other legal process. CONTRACTOR and COUNTY further agree to cooperate with the other party in any lawful effort by such other party to contest the legal validity of such subpoena or other legal process commenced by a third party.

36. Severability
If any term or condition of this Agreement or the application thereof to any person(s) or circumstances is held invalid, such invalidity shall not affect other terms, conditions or applications which can be given effect without the invalid term, condition or application. To this end, the terms and conditions of this Agreement are declared severable.

37. Survival
The provisions of Sections 5 through 35 shall survive, notwithstanding the termination or invalidity of this Agreement for any reason.

38. Exhibits
Attached hereto and made part hereof is the following:

Exhibit A CONTRACTOR's Price Proposal dated _____

Exhibit B. CONTRACTOR's Functional Requirements Document

Exhibit C. CONTRACTOR's Implementation Plan

39. Entire Agreement
This written Agreement, including the documents incorporated herein, represents the entire Agreement between the parties and supersedes any prior oral statements, discussions, or understanding between the parties. In the event of any conflict requiring interpretation, the precedence of documents shall be:

1. Exhibits.

IN WITNESS WHEREOF, COUNTY and COLORADO CUSTOMWARE, INC. have executed this Agreement as of the date first above written.

COLORADO CUSTOMWARE, INC.

CORPORATE SEAL:

By: _____

Title: President / CEO

President/Vice-President

Attest: _____

Name: Lorri J. Marshall

Title: Asst Secretary

APPROVED:

By: _____
Jose M. Sanchez
As Chairman of the GILA COUNTY Board of Supervisors and not Personally.

APPROVED AS TO FORM:

By: _____
for Gila County Attorney

PRICE PAGE

ENTITY NAME: Gila County, Arizona

SOFTWARE COSTS: $ 85,705

Description	Cost Per Module	
CAMA for Real Property		Included above
CAMA for Personal Property		Included above
Assessment Administration		Included above
Other – FieldWare and GeoWare		Included above

INSTALLATION COSTS: $ Included above

CONVERSION COSTS: $ Included above

CUSTOMIZATION COSTS: $ Included above

Description	Unit Cost	

TRAINING COSTS: $ Included above

Description	# of Persons	Cost Per User
End User Training		Included above
Power User Training	2	Included above
Advanced Power User Training	2	Included above
Apex IV Windows Assessor Sketch Training		Included above

DOCUMENTATION COSTS: $ Included above

Description	Cost Per Manual	

MISCELLANEOUS COSTS: **$ Included above**

Description		
Marshall & Swift Cost Tables		Included above

TOTAL ONE-TIME COSTS: **$ Included above**

REQUIRED THIRD-PARTY SOFTWARE COSTS: **$ Included above**

Description	# of Users	Cost Per User
Apex IV Windows Sketch	6	Included above
Oracle Database Standard Edition	17	Included above
Microsoft Access	2	Included above
SPSS Analysis Software	1	Included above

OPTIONAL THIRD-PARTY SOFTWARE COSTS: **$**

escription	# of Users	Cost Per User

TOTAL THIRD PARTY SOFTWARE COSTS: **$ Included above**

TOTAL ANNUAL COSTS - ***(list support and other annual costs for all proposed items):*** **$ See attached schedule**

Year Two Support (see attached schedule)		**$ 87,653**
Year Three Support (see attached schedule)		**$ 89,601**
Year Four – Year 10 Support (see attached schedule)		**$ 91,549 each year**

Colorado CustomWare Inc.

RealWare Price Proposal For Assessor - Gila County

COMPONENTS	Initial Project Component Totals	Sub Totals
SOFTWARE: (all inclusive price based on $2.20/Parcel 38,957 parcels)	$ 85,705	
RealWare: *CAMA, Administration, Personal Property*		Included
FieldWare: *Hand-held software for tablet PC*		Included
GeoWare: *GIS interconnectivity tool*		Included
Database Hosting, Management, and Backup (High Speed Connection Required)		Included
Apex IV Windows Sketch: (6 users - includes maintenance) $595 each		Included
Oracle Database: Standard Edition (17 named users) $149 each		Included
Microsoft Access: 2 users @ $399 per user. (Only personnel who will be writing ad-hoc queries will require a license.)		Included
SPSS Analysis Software: 1 user @ $3480 per user		Included
SERVICES:	$ -	
Project Management		Included
Installation of RealWare Suite		Included
Gap Analysis		Included
MIGRATION & CUSTOMIZATION:	$ -	
Conversion: Estimate 150 hours @ $150 per hour		Included
Integration: Includes DOR format Flat Tax File (other integration extra)		Included
Apex Conversion (Optional at extra cost if format of sketch program is convertible) $.17 per parcel		TBD
Customization: Will include all Mohave contractual enhancements		None
TRAINING:	$ -	
CCI Software Training:		
End User Training		
Two 4-day sessions in Joint Location (Travel May Be Required)		Included
Power User Training		
One 2 1/2 day session - 2 @ $1,095/student at CCI (travel not included)		Included
Advanced Power User Training		
One 2 1/2 day session - 2 @ $1,095/student at CCI (travel not included)		Included
Apex IV Windows Assessor Sketch Training *(1/2 day)*		Included
FIRST YEAR SUPPORT:	$ -	
Annual RealWare Software Support		Included
Annual Marshall & Swift Cost Tables: (Based on 38,000 improved parcels)		Included
Annual Apex Support (6 Users @ $195 each)		
Oracle Support & Subscription Service (17 users @ $66)		Included
Total First Year Cost	**$ 85,705**	

PAYMENT TERMS:	$ 85,705	
Due at Contract Signing - 50%		$ 42,853
Due at Software Installation - 40%		$ 34,282
Due at Final Acceptance - 10%		$ 8,571

Price valid for 90 days

Colorado CustomWare Inc.

Future Support Estimate For
Assessor - Gila County

SECOND YEAR COSTS	Item Totals	Sub Totals
ANNUAL FEES: $2.25 per parcel (Based on Current Parcel Count)	$ 87,653	
Realware		Included
Web Portal		Included
FieldWare		Included
GeoWare		Included
Third Party Support:		
Apex		Included
Oracle		Included
Marshall & Swift		Included
Total Year 2 Estimate	**$ 87,653**	

THIRD YEAR COSTS	Item Totals	Sub Totals
ANNUAL FEES: $2.30 per parcel (Based on Current Parcel Count)	$ 89,601	
Realware		Included
Web Portal		Included
FieldWare		Included
GeoWare		Included
Third Party Support:		
Apex		Included
Oracle		Included
Marshall & Swift		Included
Total Year 3 Estimate	**$ 89,601**	

YEAR 4 to YEAR 10 COSTS	Item Totals	Sub Totals
ANNUAL FEES: $2.35 per parcel (Based on Current Parcel Count)	$ 91,549	
Realware		Included
Web Portal		Included
FieldWare		Included
GeoWare		Included
Third Party Support:		
Apex		Included
Oracle		Included
Marshall & Swift		Included
Total Year 4 to Year 10 Estimate	**$ 91,549**	

AMENDMENT 1
TO SOFTWARE CONTRACT
License; Clarification of Payment Terms; and Discount

This Amendment is hereby entered into by Colorado CustomWare, Inc. ("CCI") and the County of Gila, an Arizona public entity with its principal place of business at 1400 E. Ash Street, Globe, AZ 85501 ("County") as of the last date of the parties' signatures below. This Amendment is made part of and supersedes elements of the contract between CCI and the County title "Master Services Agreement" dated December 5th, 2007 (the "Agreement"). All capitalized terms used herein shall have the meanings attributed to them within the Agreement unless otherwise noted. The parties agree that the Agreement and its Exhibits and other attachments shall remain in full force and effect unless specifically modified herein.

NOW THEREFORE, the following terms and conditions are hereby amended:

1. Definition of Software. The term "Software" shall mean all software as it relates to the System including Standard Software and Custom Software as defined within the Agreement.

2. Software License. This section supersedes the Agreement § 32, "Quiet Possession and Usage." Upon payment of the Software License Fees under the Agreement and as clarified by this Amendment, CCI grants to the County, and the County accepts, a perpetual, non-transferable, limited, non-exclusive, Software License to: (i) use the Software in object code form as limited by the Agreement and this Amendment; (ii) use the Software only for County's internal business needs; and (iii) make one (1) archival copy of the Software that is currently installed on County's hardware provided the County affixes to any such copy all copyright, confidentiality, and proprietary notices that appear on the original, the County gives written notice to CCI of the existence of such archival copy, and such archival copy is subject to all limitations set forth in the Agreement. All rights not expressly granted hereunder shall be reserved to CCI. Additionally, the County shall not, sublicense, sell, rent, transfer, distribute or otherwise commercially exploit or make the Software available to any third-party. The County and all of its users who have the right to use the Software on behalf of the County under the Agreement, will be bound to and comply with the Agreement. This license grant is effective upon the County's acceptance of this Amendment, indicated by the signature on this Amendment of an authorized signatory of the County.

   The County shall not, directly or indirectly (i) reverse engineer, decompile or disassemble the Software, or otherwise attempt to derive the source code of the Software, or any portion thereof; (ii) make more copies of the Software than is specified in the Agreement, this Amendment, or allowed by applicable law, despite this limitation; (iii) publish or otherwise display the Software including any screenshots of the Software, for others to copy; (iv) modify or create a derivative work of any part of the Software; (v) use the Software other than as, or for any purpose other than that, set forth in the Agreement or in any application that may involve risks of death, personal injury, severe property damage, or environmental damage; and (vi) file copyright or patent applications that include the Software or take any other action that may transfer any intellectual property rights in the Software to any person or entity other than CCI. The County recognizes that the Software is itself proprietary information and shall use at least the same degree of care as it uses to protect its own proprietary information of similar kind, but in no event shall such care be less than commercially reasonable, so as to protect the Software without limiting the generality of the foregoing. For avoidance of doubt, the archival copy of the Software the County is permitted to keep hereunder may be used only to comply with the County's record keeping obligations under applicable law and for no other purpose.

3. Term. This section supersedes the Agreement § 6, "Term of Agreement." The term of the Software License granted hereunder shall begin December 5th, 2007 and continue in perpetuity.

   The term for support and other services as stated within the Agreement shall be for ten (10) years expiring March 31st, 2018. Upon the expiration of the term, CCI and the County may mutually agree to renew the contract for additional one (1) year terms thereafter. Any stipulated fees are subject to change upon any renewal.

4. Payments. The annual payments described within the Agreement are made in consideration of the Software License and the installation and related services of the System which have been already completed ("Software License Fee"), and for separate on-going support of the software ("Support Fee"). These annual payments are based upon the quantity of parcels within the corporate limits of the County. Support Fees are payable net 30 days as billed. In addition to any amounts already paid under the Agreement, the parties acknowledge the County's annual payment obligations to CCI for the remainder of the term are as follows:

Annual Period	Estimated Parcels	Rate per Parcel	Software License Fee	Support Fee	Annual Payment
April, 2013 – March, 2014	43,078	$2.35	$76,247.96	$24,985.34	$101,233.30
April, 2014 – March, 2015	43,078	$2.35	$69,540.26	$31,693.04	$101,233.30
April, 2015 – March, 2016	43,078	$2.35	$69,540.26	$31,693.04	$101,233.30
April, 2016 – March, 2017	43,078	$2.35	$69,540.26	$31,693.04	$101,233.30
April, 2017 – March, 2018	43,078	$2.35	$69,540.26	$31,693.04	$101,233.30
		TOTAL	**$354,409.00***	**$151,757.50**	**$506,166.50**

* This and amounts previously paid to CCI represent the entire purchase price of the Software Licenses in connection with the project.

5. Discount. If (i) this Amendment is executed on or before February 21st, 2013 and (ii) the County subsequently enters into a separate agreement with Zions Bancorporation to finance the Software License Fees and (iii) pays a reduced amount directly to CCI upon execution of this document of **Ninety-One Thousand One Hundred Nine Dollars and Ninety-Nine Cents ($91,109.99)** for 2013, then the County shall be entitled to a ten percent (10%) discount applied to (i) the gross total of the Software License Fees such that the County shall be obligated to pay no more than **Two Hundred Fifty Thousand Three Hundred Forty-Four Dollars and Eighty-Five Cents ($250,344.85)** for such gross total of the Software License Fees; plus (ii) the annual Support Fees payable to CCI (detailed below). The sum of $250,344.85 represents the total out-of-pocket expense for Software License Fees and includes the interest charged at the rate of Three and One Quarter Percent (3.25%) for a four (4) year lease term. The cash price payable to CCI prior to Feb 15th, 2013 is **Two Hundred Thirty-One Thousand Three Hundred Thirty-Five Dollars and Ninety Cents ($231,335.90).**

Annual Period	Software License Fee	Support Fee (TO CCI)	Annual Payment
April, 2013 – March, 2014*	$62,586.21	$28,523.78	$91,109.99*
April, 2014 – March, 2015	$62,586.21	$28,523.78	$91,109.99
April, 2015 – March, 2016	$62,586.21	$28,523.78	$91,109.99
April, 2016 – March, 2017	$62,586.21	$28,523.78	$91,109.99
April, 2017 – March, 2018	$62,586.22	$28,523.77	$91,109.99
TOTAL	**$312,931.06**	**$142,618.89**	**$455,549.95**

**** Paid directly to CCI***

6. Termination. Any termination of the Agreement and this Amendment shall be without prejudice to any rights of either party against the other, and such termination shall not relieve either party of any of its obligations to the other existing at the time of termination including the County's obligation to pay any fees due.

By signing below, the parties represent and warrant that they have read and understand the provisions of this Amendment, as well as the terms and conditions set forth in the Agreement.

County of Gila, Arizona

By:_____

_____
Printed Name & Title

Date:_____

Colorado CustomWare, Inc.

By: Lori Burge

Lori D. Burge President & CEO
Printed Name & Title

Date: 1/30/13

LEASE PURCHASE AGREEMENT

This equipment lease (the "Lease") dated as of February 19, 2013, by and between Zions First National Bank, One South Main Street, Salt Lake City, Utah 84133 ("Lessor"), and Gila County, Arizona ("Lessee") a body corporate and politic existing under the laws of the State of Arizona. This Lease includes all Exhibits hereto, which are hereby specifically incorporated herein by reference and made a part hereof.

Now therefore, for and in consideration of the mutual promises, covenants and agreements hereinafter set forth, the parties hereto agree as follows:

ARTICLE I

Lease of Equipment

Section 1.1 *Agreement to Lease*. Lessor hereby demises, leases, and lets to Lessee and Lessee rents, leases and hires from Lessor, the "Equipment" (as hereinafter defined), to have and to hold for the term of this Lease; provided, however, that the obligation of Lessor to lease any item of the Equipment and to make payment to the Vendor therefor is subject to the condition precedent that Lessee shall provide the following at its cost, in form and substance satisfactory to Lessor:

(i) Evidence satisfactory to Lessor as to due compliance with the insurance provisions of Section 10.2 hereof;

(ii) Invoice of the Vendor of such item of Equipment; and

(iii) Delivery and Acceptance Certificate in the form attached hereto as Exhibit "E" executed by Lessee acknowledging delivery to and acceptance by Lessee of such item of Equipment.

Section 1.2 *Title*. During the term of this Lease, title to the Equipment will be transferred to, and held in the name of, Lessee, subject to retransfer to Lessor as provided in Section 3.4. Upon termination of this Lease as provided in Sections 3.3 (a) or 3.3 (c), title to the Equipment will transfer automatically to Lessor without the need for any further action on the part of Lessor, Lessee, or any other person, provided that if any action is so required, Lessee by this Lease appoints Lessor its irrevocable attorney in fact to take any action to so transfer title to the Equipment to Lessor. Lessor at all times will have access to the Equipment for the purpose of inspection, alteration, and repair.

Section 1.3 *Security*. To secure the payment of all of Lessee's obligations to Lessor under this Lease, Lessee grants to Lessor a security interest in the Equipment and in all additions, attachments, accessions, and substitutions to or for the Equipment. The security interest granted herein includes proceeds. Lessee agrees to execute such additional documents,

including financing statements, affidavits, notices, and similar instruments, in form satisfactory to Lessor, which Lessor deems necessary or advisable to establish and maintain its security interest in the Equipment. Lessor understands and agrees that the security interest granted in this Section shall be subject and subordinate to presently existing security interests and/or purchase money security interests in miscellaneous equipment which may be installed in accordance with the provisions of Section 9.3.

ARTICLE II

Definitions

The terms defined in this Article II shall, for purposes of this Lease, have the meaning herein specified unless the context clearly otherwise requires:

"Business Day" shall mean any day except Saturday, Sunday and legal holidays on which banks in the State of Arizona are closed.

"Code" means the Internal Revenue Code of 1986, as amended.

"*Commencement Date*" shall mean the date when the term of this Lease begins and Lessee's obligation to pay rent accrues, as set forth in Section 3.1.

"*Equipment*" shall mean the property which Lessor is leasing to Lessee referred to in Section 1.1 and more fully described in Exhibit "A."

"*Lessee*" shall mean Gila County.

"*Lessor*" shall mean Zions First National Bank, Salt Lake City, Utah, its successors and assigns.

"*Option Purchase Price*" shall mean the amount which Lessee must pay Lessor to purchase the Equipment, as determined by Article V.

"*Original Term*" shall mean the period from the Commencement Date until the end of the fiscal year of Lessee in effect at the Commencement Date, as set forth in Section 3.2.

"Principal Outstanding" means the remaining unpaid principal outstanding under this Lease as specified on Exhibit "C" attached hereto.

"*Renewal Terms*" shall mean all of the additional periods of one year (coextensive with Lessee's fiscal year) for which this Lease shall be effective in the absence of a termination of the Lease as provided in Article III.

"Rental Payment Date" means the dates upon which Rental Payments are to be made by the Lessee to the Lessor hereunder as specified on Exhibit "C" attached hereto.

"Rental Payments" means the rental payments payable by Lessee pursuant to the provisions of this Lease during the Term hereof.

"Term" or *"Term of this Lease"* shall mean the Original Term and all Renewal Terms provided for in this Lease under Section 3.2.

"Vendor" shall mean the manufacturer of the Equipment and the manufacturer's agent or dealer from whom Lessor purchased or is purchasing the Equipment.

ARTICLE III

Lease Term

Section 3.1 *Commencement*. The Term of this Lease shall commence as of:

_____ the date this Lease is executed.

_____ days after the receipt, installation, and operation of the Equipment, and its acceptance by Lessee, as indicated by an acceptance certificate signed by Lessee.

_____ the date the Vendor receives full payment for the Equipment from Lessor.

__X__ February 19, 2013.

Such date will be referred to as the Commencement Date.

Section 3.2 *Duration of Lease: Nonappropriation.* This Lease will continue until the end of the fiscal year of Lessee in effect at the Commencement Date (the "Original Term"). Thereafter, this Lease will be automatically extended 4 (four) successive additional periods of one year coextensive with Lessee's fiscal year (each, a "Renewal Term"), unless this Lease is terminated as hereinafter provided.

The parties understand that as long as Lessee has sufficient appropriated funds to make the Rental Payments hereunder, Lessee will keep this Lease in effect through all Renewal Terms and make all payments required herein or Lessee will exercise its option under Article V to purchase the Equipment. Lessee hereby declares that, as of the date of the execution of this Lease, Lessee currently has an essential need for the Leased Equipment which is the subject of this Lease to carry out and give effect to the public purposes of Lessee. Lessee reasonably believes that it will have a need for the Equipment for the duration of the Original Term and all Renewal Terms. If Lessee does not appropriate funds to continue the leasing of the Equipment for any ensuing Renewal Term, this Lease will terminate upon the expiration of the Original or Renewal Term then in effect and Lessee shall notify Lessor of such termination at least ten (10) days prior to the expiration of the Original or Renewal Term then in effect; provided, however, that a failure to give such written notice shall not constitute an event of default, result in any

liability on the part of the Lessee or otherwise affect the termination of this Lease as set forth hereinabove.

Section 3.3 *Termination*. This Lease will terminate upon the earliest of any of the following events:

(a) the expiration of the Original Term or any Renewal Term of this Lease and the failure of Lessee to appropriate funds to continue the leasing of the Equipment for the ensuing Renewal Term;

(b) the exercise by Lessee of any option to purchase granted in this Lease by which Lessee purchases all of the Equipment;

(c) a default by Lessee and Lessor's election to terminate this Lease under Article VII herein;

(d) the expiration of the Term of this Lease; or

(e) this contract is subject to and cancellable pursuant to ARS Section 38-511, but only if and to the extent that section is by its terms applicable to this Purchase Agreement.

Section 3.4 *Return of Equipment upon Termination.* Upon termination of this Lease pursuant to Sections 3.3 (a) or 3.3 (c), Lessee shall return the Equipment to Lessor in the condition, repair, appearance and working order required in Section 9.2 hereof in the following manner as may be specified by Lessor:

(a) By delivering the Equipment to Lessor at Lessee's principal place of business; or

(b) By loading the Equipment at Lessee's cost and expense, on board such carrier as Lessor shall specify and shipping the same, freight prepaid, to the destination designated by Lessor.

Lessee shall obtain all governmental authorizations to permit return of the Equipment to Lessor and Lessee shall pay to Lessor such sum as may be necessary to cover replacement of all broken or missing parts.

ARTICLE IV

Rental Payments

Section 4.1 *Amount*. Lessee will pay Lessor as rent for the use of the Equipment during the Original Term and any Renewal Terms on the dates and in the amounts set forth in Exhibit "C" attached hereto. All Rental Payments shall be paid, exclusively from legally available funds, in lawful money of the United States of America to Lessor at or to such other person or entity or at such other place as Lessor may from time to time designate by written notice to Lessee.

Section 4.2 *Portion of Rental Payments Attributable to Interest.* The portion of each Rental Payment which is paid as and is representative of interest is set forth in Exhibit "C" attached hereto.

Section 4.3 *No Right to Withhold.* Notwithstanding any dispute between Lessee, Lessor, Vendor or any other party, Lessee will make all Rental Payments when due, without withholding any portion of such rent, pending final resolution of such dispute by mutual agreement between the parties thereto or by a court of competent jurisdiction.

Section 4.4 *Rental Payments to Constitute a Current Obligation of the Lessee.* The Lessee and the Lessor acknowledge and agree that the obligation of the Lessee to pay Rental Payments hereunder constitutes a current obligation of the Lessee payable exclusively from current and legally available funds and shall not in any way be construed to be an indebtedness of the Lessee under the laws of the Constitution of the State of Arizona. The Lessee has not hereby pledged the credit of the Lessee to the payment of the Rental Payments, or the interest thereon, nor shall this Lease obligate the Lessee to apply money of the Lessee to the payment of Rental Payments beyond the then current Original Term or Renewal Term, as the case may be, or any interest thereon.

ARTICLE V

Purchase of Equipment

Section 5.1 *Option Purchase Price.* On any Business Day on or after January15, 2013, Lessee may purchase the Equipment from Lessor at a price equal to the principal amount outstanding on the Rental Payment Date immediately preceding the date of calculation (unless such date is a Rental Payment Date, in which case, the principal amount outstanding as of such date), plus accrued interest from such Rental Payment Date to such date of calculation at the rate of interest per annum in effect for the period during which the calculation is made, as set forth in Exhibit "C."

Section 5.2 *Manner of Exercise of Option.* To exercise the option, Lessee must deliver to Lessor written notice specifying the date on which the Equipment is to be purchased (the "Closing Date"), which notice must be delivered to Lessor at least thirty (30) days prior to the Closing Date specified therein. At the closing, Lessor will deliver to Lessee a bill of sale transferring the Equipment to Lessee free and clear of any lien or encumbrance created by or arising through Lessor, but without warranties, and will deliver all warranties and guarantees of Vendors of the Equipment.

Section 5.3 *Conditions of Exercise of Option.* Lessee may purchase the Equipment pursuant to the option granted by this Lease only if Lessee has made all Rent Payments when due (or has remedied any defaults in the payment of rent, in accordance with the provisions of this Lease) and if all other representations, covenants, warranties, and obligations of Lessee under this Lease have been satisfied (or all breaches of the same have been waived by Lessor in writing).

Section 5.4 *Termination Purchase*. Upon the expiration of the Term of the Lease and provided that the conditions of Section 5.3 have been satisfied, Lessee shall be deemed to have purchased the Equipment (without the payment of additional sums) and shall be vested with all rights and title to the Equipment. Lessor agrees that upon the occurrence of the events as provided in this Section, it shall deliver to Lessee the documents specified in Section 5.2, and shall comply with the provisions of Section 5.2 relating to termination upon exercise of the option to purchase.

ARTICLE VI

Representations, Covenants, and Warranties of Lessee and Lessor

Section 6.1 *Representations, Covenants and Warranties of Lessee*. Lessee represents, covenants, and warrants as follows:

(a) Lessee is a body corporate and politic, duly organized and existing under the Constitution and laws of the State of Arizona.

(b) Lessee is authorized by the Constitution and laws of the State of Arizona to enter into this Lease and to effect all of Lessee's obligations hereunder. The governing body of Lessee has executed the resolution attached as Exhibit "B" to this Lease which specifically authorizes Lessee to execute and deliver this Lease.

(c) All procedures and requirements, including any legal bidding requirements, have been met by Lessee prior to the execution of this Lease in order to insure the enforceability of this Lease and all rent and other payment obligations will be paid out of funds legally available for such purpose.

(d) The governing body of Lessee has complied with all applicable open public meeting and notice laws and requirements with respect to the meeting at which Lessee's execution of this Lease was authorized, as evidenced by the certificate of open meeting law attached to the Resolution of Governing Body which is attached hereto as Exhibit "B."

(e) The letter attached to this Lease as Exhibit "D" is a true opinion of Lessee's counsel.

(f) Lessee will use and service the Equipment in accordance with Vendor's instructions and in such a manner as to preserve all warranties and guarantees with the respect to the Equipment.

(g) During the term of this Lease, the Equipment will be used by Lessee only for the purpose of performing one or more governmental or proprietary functions of Lessee consistent with the permissible scope of Lessee's authority.

(h) The representations, covenants, warranties, and obligations set forth in this Article are in addition to and are not intended to limit any other representations, covenants, warranties, and obligations set forth in this Lease.

(i) The Equipment shall be used solely by Lessee and shall not be subject to any direct or indirect private business use.

(j) Lessee covenants and certifies to and for the benefit of Lessor throughout the term of this Lease that:

(1) No use will be made of the proceeds of this Lease, or any funds or accounts of Lessee which may be deemed to be proceeds of this Lease, which use, if it had been reasonably expected on the date of execution of this Lease, would have caused this Lease to be classified as an "arbitrage bond" within the meaning of Section 148 of the Code;

(2) Lessee will at all times comply with the rebate requirements of Section 148(f), to the extent applicable;

(3) in order to preserve the status of this Lease as other than a "private activity bond" as described in Sections 103(b)(1) and 141 of the Code, as long as this Lease is outstanding: (I) none of the proceeds of this Lease or the Equipment financed therewith shall be used for any "private business use" as that term is used in Section 141(b) of the Code and defined in Section 141(b)(6) of the Code; and (II) no part of this Lease shall be secured in whole or in part, directly or indirectly, by any interest in any equipment used in any such "private business use" or by payments in respect of such equipment, and shall not be derived from payments in respect of such equipment;

(4) it will not take any action or omit to take any action such that would cause interest on this Lease to become ineligible for the exclusion from gross income of Lessor as provided in Section 103 of the Code.

(k) The obligations of Lessee under this lease are not federally guaranteed within the meaning of Section 149(b) of the Code.

(l) This Lease is being executed for the purpose of acquiring the Equipment and is not being issued to refund or refinance any outstanding obligation of Lessee, nor to reimburse Lessee for any expenditures made prior to the date hereof.

(m) In compliance with Section 149 (e) of the Code relating to information reporting, Lessee has caused or will cause to be filed with the Internal Revenue Service, IRS form 8038–G or 8038–GC, as appropriate.

(n) Lessee has selected the Equipment and desires to lease the Equipment for use in the performance of its governmental or proprietary functions. Lessor, at Lessee's request, has ordered or shall order the Equipment and shall lease the same to Lessee as herein provided, Lessor's only role being the facilitation of the financing of the Equipment for the Lessee. Lessor will not be liable for specific performance or for damages if the supplier or manufacturer of the Equipment for any reason fails to fill, or delays in filling, the order for the Equipment. Lessee acknowledges that Lessor is not a manufacturer of or a dealer in the Equipment (or similar equipment) and does not inspect the Equipment prior to delivery to Lessee. Lessee agrees to accept the Equipment and authorizes Lessor to add the serial number of the Equipment to Exhibit "A." Lessor shall have no obligation to install, erect, test, inspect, or service the Equipment. *For purpose of this Lease and of any purchase of the Equipment effected under this Lease, Lessor expressly disclaims any warranty with respect to the condition, quality, durability, suitability, merchantability or fitness for a particular purpose of the Equipment in any respect, and any other representation, warranty, or covenant, express or implied. Lessor will not be liable to Lessee for any liability, loss, or damage caused or alleged to be caused, directly or indirectly, by any inadequacy, deficiency, or defect in the equipment, or by any use of the equipment, whatsoever.* Lessor assigns to Lessee, without recourse, for the Term of this Lease all manufacturer warranties and guarantees, express or implied, pertinent to the Equipment, and Lessor directs Lessee to obtain the customary services furnished in connection with such guarantees and warranties at Lessee's expense, subject to Lessee's obligation to reassign to Lessor all such warranties and guarantees upon Lessor's repossession of the Equipment.

(o) During the term of this Lease, Lessee covenants and agrees (1) to include in its annual tentative budget prepared by the appropriate officials acting on behalf of Lessee in accordance with applicable law an item for expenditure of an amount necessary to pay the Rental Payments for the Equipment during the next succeeding Renewal Term, and (2) to take such further action (or cause the same to be taken) as may be necessary or desirable to assure that the final budget submitted to the governing body of Lessee for its consideration seeks an appropriation of moneys sufficient to pay such Rental Payments.

(p) There are no legal or governmental proceedings or litigation pending or, to the best knowledge of Lessee, threatened or contemplated (or any basis therefore) wherein an unfavorable decision, ruling or finding might adversely affect the transactions contemplated in or the validity of this Lease

(q) Lessee has never non-appropriated or defaulted under any of its payment or performance covenants, either under any municipal lease of the same general nature as this Lease or under any of its bonds, notes or other debt obligations for which its general credit or revenues are pledged.

Section 6.2 *Representations, Covenants and Warranties of Lessor.* Lessor represents, covenants, and warrants as follows:

(a) During the term of this Lease, Lessor will provide Lessee with quiet use and enjoyment of the Equipment, without suit, trouble, or hindrance from Lessor, except upon default by Lessee as set forth in this Lease.

(b) Lessor has not caused to be created any lien or encumbrance on the Equipment except the security interest provided in Section 1.3 of this Lease.

ARTICLE VII

Events of Default and Remedies

Section 7.1 *Events of Default Defined.* The following shall be "events of default" under this Lease and the terms, "event of default" and "default" shall mean, whenever they are used in this Lease, any one or more of the following events:

(a) Failure by Lessee to pay any Rental Payment or other payment required to be paid hereunder at the time specified herein; and

(b) Failure by Lessee to observe and perform any covenant, condition or agreement on its part to be observed or performed, other than as referred to in Section 7.1 (a), for a period of 30 days after written notice, specifying such failure and requesting that it be remedied as given to Lessee by Lessor, unless Lessor shall agree in writing to an extension of such time prior to its expiration; provided, however, if the failure stated in the notice cannot be corrected within the applicable period, Lessor will not unreasonably withhold its consent to an extension of such time if corrective action is instituted by Lessee within the applicable period and diligently pursued until the default is corrected.

The foregoing provisions of this Section 7.1 are subject to (i) the provisions of Section 3.2 hereof with respect to nonappropriation; and (ii) if by reason of *force majeure* Lessee is unable in whole or in part to carry out its agreement on its part herein contained, other than the obligations on the part of Lessee contained in Article IV hereof, Lessee shall not be deemed in default during the continuance of such inability. The term "*force majeure*" as used herein shall mean, without limitation, the following: acts of God; strikes, lockouts or other industrial disturbances; acts of public enemies; orders or restraints of any kind of the government of the United States of America or of the state wherein Lessee is located or any of their departments, agencies or officials, or any civil or military authority; insurrections; riots; landslides; earthquakes; fires; storms, droughts; floods; explosions; breakage or accident to machinery, transmission pipes or canals; or any other cause or event not reasonably within the control of Lessee.

Section 7.2 *Remedies on Default.* Whenever any event of default referred to in Section 7.1 hereof shall have happened and be continuing, Lessor shall have the right, at its sole option without any further demand or notice to take one or any combination of the following remedial steps:

(a) With or without terminating this Lease, retake possession of the Equipment and sell, lease or sublease the Equipment for the account of Lessee, holding Lessee liable for the difference between (i) the rents and other amounts payable by Lessee hereunder to the end of the then current Original Term or Renewal Term, as appropriate, and (ii) the purchase price, rent or other amounts paid by a purchaser, lessee or sublessee of the Equipment pursuant to such sale, lease or sublease; and

(b) Take whatever action at law or in equity may appear necessary or desirable to enforce its rights as the owner of the Equipment.

Section 7.3 *No Remedy Exclusive*. No remedy herein conferred upon or reserved to Lessor is intended to be exclusive and every such remedy shall be cumulative and shall be in addition to every other remedy given under this Lease or now or hereafter existing at law or in equity. No delay or omission to exercise any right or power accruing upon any default shall impair any such right or power or shall be construed to be a waiver thereof, but any such right and power may be exercised from time to time and as often as may be deemed expedient. In order to entitle Lessor to exercise any remedy reserved to it in this Article VII it shall not be necessary to give any notice, other than such notice as may be required in this Article VII.

Section 7.4 *Waiver of Certain Damages*. With respect to all of the remedies of Section 7.2 above, Lessee expressly waives any damages occasioned by Lessor's repossession of the Equipment.

ARTICLE VIII

Payment of Taxes, Fees, Permits, and Utility Services

Section 8.1 *Interpretation*. This Lease for all purposes will be treated as a net lease.

Section 8.2 *Taxes and Fees.* Lessee agrees to pay and to indemnify and hold Lessor harmless from, all license, sales, use, personal property, and other taxes and fees, together with any penalties, fines, and interest on such taxes and fees imposed or levied with respect to the Equipment and the ownership, delivery, lease, possession, use, operation, sale, and other disposition of the Equipment, and upon the rental or earnings arising from any such disposition, except any federal or state income taxes payable by Lessor on such rental or earnings. Lessee may in good faith and by appropriate proceedings contest any such taxes and fees so long as such proceedings do not involve any danger of sale, forfeiture, or loss of the Equipment or of any interest in the Equipment.

Section 8.3 *Permits*. Lessee will provide all permits and licenses necessary for the installation, operation, and use of the Equipment. Lessee will comply with all laws, rules, regulations, and ordinances applicable to the installation, use, possession, and operation of the Equipment. If compliance with any law, rule, regulation, ordinance, permit, or license requires changes or additions to be made to the Equipment, such changes or additions will be made by Lessee at its own expense.

Section 8.4 *Utilities*. Lessee will pay all charges for gas, water, steam, electricity, light, heat or power, telephone, or other utilities furnished to or used in connection with the Equipment (including charges for installation of such services) during the term of this Lease. There will be no abatement of rent on account of the interruption of any such services.

ARTICLE IX

Use, Repairs, Alterations, and Liens

Section 9.1 *Use*. Lessee will not install, use, operate, or maintain the Equipment improperly, carelessly, in violation of any applicable law, or in a manner contrary to that contemplated by this Lease. Lessee agrees that the Equipment is and at all times will remain personal property not withstanding that the Equipment or any part of the Equipment may now or hereafter become affixed in any manner to real property or to any building or permanent structure.

Section 9.2 *Repairs*. Lessee at its own cost will service, repair, and maintain the Equipment so as to keep the Equipment in as good condition, repair, appearance, and working order as when delivered to and accepted by Lessee under this Lease, ordinary wear and tear excepted. At its own cost, Lessee will replace any and all parts and devices which may from time to time become worn out, lost, stolen, destroyed damaged beyond repair, or rendered unfit for use for any reason whatsoever. All such replacement parts, mechanisms, and devices will be free and clear of all liens, encumbrances, and rights of others, and immediately will become a part of the Equipment and will be covered by this Lease (for all purposes including the obligation of Lessee to retransfer title to Lessor under Section 1.2 herein) to the same extent as the Equipment originally covered by this Lease.

Section 9.3 *Alterations*. Lessee may install such miscellaneous equipment as may be necessary for use of the Equipment for its intended purposes so long as either (a) the installation of such equipment does not alter the function or manner of operation of the Equipment, or (b) Lessee, upon termination of this Lease (other than termination pursuant to Section 3.3(b) or (d), restores the Equipment to its function and manner of operation prior to the installation of such equipment. Subject to the obligations described above, Lessee may remove such equipment upon termination of this Lease, if the removal of such equipment will not substantially damage the Equipment. Without the prior written consent of Lessor, Lessee will not make any other alterations, changes, modifications, additions, or improvements to the Equipment except those needed to comply with Lessee's obligations to change, add to, or repair the Equipment as set forth in Sections 9.2 and 10.3 herein. Any alterations, changes, modifications, additions, and improvements made to the Equipment, other than miscellaneous

equipment installed as set forth above, immediately will become a part of the Equipment and will be covered by this Lease (for all purposes, including the obligation of Lessee to retransfer title to Lessor under Section 1.2 herein) to the same extent as the Equipment originally covered by this Lease.

Section 9.4 *Liens*. Except with respect to the security interest provided in Section 1.3 hereof, Lessee will not directly or indirectly create, incur, assume, or suffer to exist any mortgage, pledge, lien, charge, encumbrance, or claim on or with respect to the Equipment or any interest in the Equipment. Lessee promptly and at its own expense will take such action as may be necessary to duly discharge any mortgage, pledge, lien, charge, encumbrance, or claim, not excepted above, if the same arises at any time.

ARTICLE X

Indemnification, Insurance, and Damage to or Destruction of the Equipment

Section 10.1 *Indemnification*. Lessee assumes liability for and agrees to indemnify Lessor from and against any and all liability (including attorney's fees) of any nature imposed upon, incurred by, or asserted against Lessor which in any way relates to or arises out of ownership, delivery, lease, possession, use, operation, condition, sale, or other disposition of the Equipment. Notwithstanding anything contained in this Section to the contrary, Lessor shall not be indemnified for, or relieved of, any liability which may be incurred from Lessor's breach of this Lease.

Section 10.2 *Insurance*. Lessee at Lessor's option will either self insure, or at its cost, will cause casualty insurance, public liability insurance, and property damage insurance to be carried and maintained on the Equipment, with all such coverages to be in such amounts sufficient to cover the value of the Equipment at the commencement of this Lease (as determined by the purchase price paid by Lessor for the Equipment), and to be in such forms, to cover such risks, and with such insurers, as are acceptable to Lessor. A combination of self–insurance and policies of insurance may be utilized. If policies of insurance are obtained, Lessee will cause Lessor to be the named insured on such policies as its interest under this Lease may appear. Insurance proceeds from insurance policies or budgeted amounts from self–insurance as relating to casualty and property damage losses will, to the extent permitted by law, be payable to Lessor to the extent of the sum of the Option Purchase Price of the Equipment at the time of its damage or destruction and all amounts due and owing hereunder. Lessee will deliver to Lessor the policies or evidences of insurance satisfactory to Lessor, if any, together with receipts for the initial premiums before the Equipment is delivered to Lessee. Renewal policies, if any, together with receipts showing payment of the applicable premiums will be delivered to Lessor at least thirty (30) days before termination of the policies being renewed. By endorsement upon the policy or by independent instrument furnished to Lessor, such insurer will agree that it will give Lessor at least thirty (30) days' written notice prior to cancellation or alteration of the policy. Lessee will carry workmen's compensation insurance covering all employees working on, in, or about the Equipment, and will require any other person or entity

working on, in, or about the Equipment to carry such coverage, and will furnish to Lessor certificates evidencing such coverages throughout the Term of this Lease.

Section 10.3 *Damage to or Destruction of the Equipment*. If all or any part of the Equipment is lost, stolen, destroyed, or damaged, Lessee will give Lessor prompt notice of such event and will, to the extent permitted by law, repair or replace the same at Lessee's cost within thirty (30) days after such event, and any replaced Equipment will be substituted in this Lease by appropriate endorsement. All insurance proceeds received by Lessor under the policies required under Section 10.2 with respect to the Equipment lost, stolen, destroyed, or damaged, will be paid to Lessee if the Equipment is repaired or replaced by Lessee as required by this Section. If Lessee fails or refuses to make the required repairs or replacement, such proceeds will be paid to Lessor to the extent of the then remaining portion of the Rental Payments to become due during the Term of this Lease less that portion of such Rental Payments attributable to interest which will not then have accrued. No loss, theft, destruction, or damage to the Equipment will impose any obligation on Lessor under this Lease, and this Lease will continue in full force and effect regardless of such loss, theft, destruction, or damage. Lessee assumes all risks and liabilities, whether or not covered by insurance, for loss, theft, destruction, or damage to the Equipment and for injuries or deaths of persons and damage to property however arising, whether such injury or death be with respect to agents or employees of Lessee or of third parties, and whether such damage to property be to Lessee's property or to the property of others.

ARTICLE XI

Miscellaneous

Section 11.1 *Assignment and Sublease by Lessee.* Lessee may not assign, transfer, pledge, or encumber this Lease or any portion of the Equipment (or any interest in this Lease or the Equipment), or sublet the Equipment, without the prior written consent of Lessor. Consent to any of the foregoing acts shall not constitute a consent to any subsequent like act by Lessee or any other person. Lessee agrees that Lessor may impose on the Equipment such plates or other means of identification as necessary to indicate that the Equipment is subject to this Lease and the restrictions set forth in this Section.

Section 11.2 *Assignment by Lessor.* The parties hereto agree that all rights of Lessor hereunder may be assigned, transferred or otherwise disposed of, either in whole or in part; provided that (1) notice of any such assignment, transfer or other disposition is given to Lessee at least five (5) days prior thereto; (2) prior to any such assignment, transfer or other disposition, the name and address of the assignee or transferee must be registered on registration books maintained by Lessee for this Lease; and (3) prior to any such assignment, transfer or other disposition, this Lease must be surrendered to Lessee and the interest of any such assignee or transferee indicated on the face hereof and after such notation hereon, Lessee will redeliver this Lease to the new owner or owners hereof. Lessee shall maintain registration books for this Lease and shall be obligated to make the payments required hereby, including principal and interest payments, solely to the registered owner or owners hereof.

Section 11.3 *Lessor's Right to Perform for Lessee*. If Lessee fails to make any payment or fails to satisfy any representation, covenant, warranty, or obligation contained herein or imposed hereby, Lessor may (but need not) make such payment or satisfy such representation, covenant, warranty, or obligation, and the amount of such payment and any expenses incurred by Lessor, as the case may be, together with interest thereon as herein provided, will be deemed to be additional rent payable by Lessee on Lessor's demand.

Section 11.4 *Addresses*. All notices to be given under this Lease will be made in writing and mailed or delivered by registered or certified mail, return receipt requested to the following addresses until either Lessee or Lessor gives written notice to the other specifying a different address:

(a) if to Lessee, at Gila County, Arizona, 1400 E. Ash Street, Globe, Arizona 85501, Attention: Joseph Heatherly, County Finance Manager.

(b) if to Lessor, at Zions First National Bank, One South Main Street, 17th Floor, Salt Lake City, Utah, 84133. Attention: Public Financial Services.

Section 11.5 *Manner of Payment.* All payments by Lessee will be made in cash, by certified or cashier's check, or by other manner acceptable to Lessor.

Section 11.6 *Nonwaiver*. No breach by Lessee in the satisfaction of any representation, covenant, warranty, or obligation contained herein or imposed hereby may be waived except by the written consent of Lessor, and any such waiver will not operate as a waiver of any subsequent breach. Forbearance or indulgence by Lessor in any regard whatsoever shall not constitute a waiver of the covenant or obligation and until complete performance by Lessee of said covenant or obligation Lessor shall be entitled to invoke any remedy available to it under this Lease despite said forbearance or indulgence. No collection of rent shall operate as a waiver of any default.

Section 11.7 *Severance Clause*. Any provision in this Lease which is prohibited by Law will be treated as if it never were a part of this Lease, and the validity of the remaining terms of this Lease will be unaffected.

Section 11.8 *Entire Agreement; Addendum*. This Lease and the attached Exhibits constitute the entire agreement between Lessor and Lessee and supersedes any prior agreement between Lessor and Lessee with respect to the Equipment, except as is set forth in an Addendum, if any, which is made a part of this Lease and which is signed by Lessor and Lessee.

Section 11.9 *Amendments*. This Lease may be amended only by a written document signed by Lessor and Lessee, or their respective successors and assigns.

Section 11.10 *Inurement*. Subject to the restrictions in Section 11.1 above, this Lease is binding upon and inures to the benefit of Lessor and Lessee and their respective successors and assigns.

Section 11.11 *Governing Law*. This Lease is governed by the laws of the State of Arizona.

Section 11.12 *Headings*. Headings used in this Lease are for convenience of reference only and the interpretation of this Lease will be governed by the text only.

Section 11.13 *Offset*. Rental Payments or other sums payable by Lessee pursuant to this Lease shall not be subject to set–off, deduction, counterclaim or abatement and Lessee shall not be entitled to any credit against such Rental Payments or other sums for any reason whatsoever, including, but not limited to any damage or destruction of the Equipment or any restriction or interference with Lessee's use of the Equipment.

Section 11.14 *Interest*. If Lessee fails to pay any Rental Payment or other amount due hereunder within ten (10) days after the due date thereof, Lessee shall pay to Lessor interest on such delinquent payment from the due date until paid at the rate of one percent (1%) per month.

Section 11.15 *Nature of this Agreement*. Lessor and Lessee agree that it is their intention that, for federal income tax purposes, the interest of Lessor in the Equipment is as a secured party and the interest of Lessee is as a debtor with the aggregate principal amount of the Rental Payments constituting the purchase price of the Equipment, and that Lessor neither has nor will have any equity in the Equipment.

Section 11.16 *Designation of Issue for Tax Purposes*. In accordance with Section 265 of the Code, Lessee hereby designates this Lease as an issue qualifying for the exception for certain qualified tax–exempt obligations to the rule denying banks and other financial institutions 100% of the deduction for interest expenses which is allocable to tax–exempt interest. Lessee reasonably anticipates that the total amount of tax–exempt obligations [other than (i) private activity bonds, as defined in Section 141 of the Code (a qualified 501 (c)(3) bond, as defined in Section 145 of the Code, and any bond issued to refund certain obligations issued before January8, 1986 as described in Section 265 (b)(3)(B)(ii)(II) of the Code not being treated as a private activity bond for this purpose), (ii) any obligation to which Section 141 (a) of the Code does not apply by reason of Sections 1312, 1313, 1316 (g) or 1317 of the Tax Reform Act of 1986 and which is described in Section 265 (b)(3)(C)(ii)(II) of the Code, and (iii) any obligation issued to refund (other than to advance refund within the meaning of Section 149 (d)(5) of the Code) any obligation to the extent the amount of the refunding obligation does not exceed the outstanding amount of the refunded obligation] which will be issued by the Lessee and by any aggregated issuer during the current calendar year will not exceed $10,000,000.

Section 11.17 *Exhibits*. This Lease shall not be effective as against Lessor until such time as all Exhibits attached hereto, consisting of Exhibits "A" through "F," inclusive, are completed to the satisfaction of Lessor and delivered to Lessor.

EXHIBITS

Exhibit A ..... Description Of Equipment
Exhibit B ..... Resolution of Governing Body
Exhibit C ..... Payment Schedule
Exhibit D ..... Opinion of Lessee's Counsel
Exhibit E..... Delivery and Acceptance Certificate
Exhibit F..... Security Documents

Executed this _____ day of February, 2013.

Lessor:

Zions First National Bank

By _____

Title Vice President

Lessee:

Gila County

By _____
Michael A. Pastor

Title Chairman, Board of Supervisors

EXHIBIT A

Description of Equipment

	Description/Serial Numbers
	RealWare Assessment Software Appeals Module CAMA Module, Cost Market and Income approach to value -Administrative Module - Personal Property -GeoWare

Initials of Lessee Signatory

EXHIBIT B

RESOLUTION NO. 13-02-04

A RESOLUTION OF THE GILA COUNTY BOARD OF SUPERVISORS TO APPROVE A LEASE PURCHASE AGREEMENT THAT HAS BEEN PRESENTED TO GILA COUNTY BY COLORADO CUSTOMWARE, INC. AND ZIONS FIRST NATIONAL BANK FOR GILA COUNTY TO FINANCE THE REMAINING FIVE YEARS ON THE MASTER SERVICES AGREEMENT BETWEEN GILA COUNTY AND COLORADO CUSTOMWARE, INC. FOR REALWARE, FIELDWARE AND GEOWARE SOFTWARE SYSTEMS.

WHEREAS, the Gila County Board of Supervisors recognizes the opportunity for the savings over the course of the five year remaining payment commitment to Colorado CustomWare, Inc.; and

WHEREAS, the Gila County Board of Supervisors has determined that a true and very real need exists for the leasing of the equipment described in the Equipment Lease Agreement presented to this meeting; and

WHEREAS, the Gila County Board of Supervisors has reviewed the form of the Equipment Lease Agreement and has found the terms and conditions thereof acceptable to the Gila County Board of Supervisors; and

WHEREAS, the Gila County Board of Supervisors has taken the necessary steps, under applicable law to arrange for the leasing of such equipment under the Equipment Lease Agreement.

THEREFORE, BE IT RESOLVED that we, the Gila County board of Supervisors, have determined that the terms of said Equipment Lease Agreement are in the best interests of Gila County for the leasing of the equipment described therein; and thereby authorize its Chairman to execute and deliver the Equipment Lease Agreement and any related documents necessary to the consummation of the transactions contemplated by the Equipment Lease Agreement for and on

behalf of; and that the full body of the Gila County Board of Supervisors are hereby authorized and directed to fulfill all obligations under the terms of the Equipment Lease Agreement.

PASSED AND ADOPTED this 19th day of February 2013, at Globe, Gila County, Arizona

Attest:

Marian Sheppard
Chief Deputy Clerk of the Board

GILA COUNTY BOARD OF SUPERVISORS

Michael A. Pastor, Chairman

Approved as to form:

Bryan Chambers
Deputy Attorney Principal

STATE OF ARIZONA)

:ss.

COUNTY OF GILA)

I John Nelson, hereby certify that I am the duly qualified and acting Board Clerk of Gila County. I further certify that the above including a Resolution adopted at said meeting held on February 19, 2013, as said minutes and Resolution are officially of record in my possession, and that a copy of said Resolution was deposited in my office on _____ _____, 2013.

In witness whereof, I have hereunto set my hand and this _____ day of February, 2013.

By _____
Marian Sheppard, Chief Deputy Clerk of the Board
for: Title Board Clerk

STATE OF ARIZONA)

:ss.

COUNTY OF GILA)

I, John Nelson, the duly qualified Board Clerk of Gila County do hereby certify:

The Governing Body has complied in all respects with the open meeting laws as set forth in and required by the Statues of the State of Arizona.

In witness whereof, I have hereunto set my hand this _____ day of February, 2013.

By _____
Marian Sheppard, Chief Deputy Clerk of the Board
for:
Title Board Clerk

EXHIBIT C

Payment Schedule

Lessee: Gila County

Date of Lease: February 19, 2013

Amount Due: $231,335.90

1. Interest has been computed at the rate of 3.25% per annum. Interest shall accrue from the Commencement Date.

2. Rental payments shall be due annually commencing February 15, 2014. The payments set forth on the attached debt service schedule shall be due on the 15th day of each February up to and including February 15, 2017.

3. The Option Purchase Price, on any given date of calculation, is equal to the Principal Outstanding on the Rental Payment Date immediately preceding the date of calculation (unless such calculation date is a Rental Payment Date, in which case, the Principal Outstanding as of such date) plus accrued interest from such Rental Payment Date at the rate set forth in paragraph number 1 above.

GILA COUNTY, ARIZONA

$231,335.90 LEASE PURCHASE

Dated: February 19, 2013

Debt Service Schedule

Date	Principal	Coupon	Interest	Total P+I
02/15/2014	55,151.33	3.250%	7,434.88	62,586.21
02/15/2015	56,860.21	3.250%	5,726.00	62,586.21
02/15/2016	58,708.17	3.250%	3,878.04	62,586.21
02/15/2017	60,616.19	3.250%	1,970.03	62,586.22
Total	**$231,335.90**	-	**$19,008.95**	**$250,344.85**

Initials of Lessee Signatory

Shawn Fuller, Chief Deputy
Bryan B. Chambers, Civil Division
Jeff Dalton, Child Support Division

Nicholas Buzan
June Ava Florescue
Raymond Geiser
Elizabeth Maupin
Joy L. Riddle
Travis Shields
Marc Stanley

GILA COUNTY ATTORNEY

Bradley D. Beauchamp

EXHIBIT D

Opinion of Lessee's Counsel

To: Zions First National Bank
One South Main Street, 17th Floor
Salt Lake City, Utah 84111

Gentlemen:

As counsel for Gila County ("Lessee"), I have examined duly executed originals of Equipment Lease Agreement (the "Lease") dated February 19, 2013, between the Lessee and Zions First National Bank, Salt Lake City, Utah ("Lessor"), and the proceedings taken by Lessee to authorize and execute the Lease. Based upon such examination as I have deemed necessary or appropriate, I am of the opinion that:

1. Lessee is a body corporate and politic, legally existing under the laws of the State of Arizona.

2. The Lease has been duly authorized, executed, and delivered by Lessee.

3. The governing body of Lessee has complied with all applicable open public meeting and notice laws and requirements with respect to the meeting at which Lessee's execution of the Lease was authorized.

4. The Lease is a legal, valid, and binding obligation of Lessee, enforceable in accordance with its terms except as limited by the state and federal laws affecting remedies and by bankruptcy, reorganization, or other laws of general application affecting the enforcement of creditors' rights generally.

5. The Lease is in accordance with and does not violate the usury statutes of the State of Arizona, if any.

6. There are no legal or governmental proceedings or litigation pending or, to the best of my knowledge, threatened or contemplated (or any basis therefor) wherein an unfavorable decision, ruling or finding might adversely affect the transactions contemplated in or the validity of the Lease.

7. The Equipment (as defined in the Lease) constitutes personal property and when subjected to use by Lessee will not become fixtures under applicable law.

_____

Bryan B. Chambers
Deputy Gila County Attorney
Attorney for Lessee

EXHIBIT E

Delivery and Acceptance Certificate

To: Zions First National Bank

Reference is made to the Equipment Lease Agreement between the undersigned Gila County ("Lessee"), and Zions First National Bank ("Lessor"), dated February 19, 2013, ("the Lease") and to the Equipment as such term is defined therein. In connection therewith we are pleased to confirm to you the following:

1. All of the Equipment has been delivered to and received by the undersigned; all installation or other work necessary prior to the use thereof has been completed; said Equipment has been examined and/or tested and is in good operating order and condition and is in all respects satisfactory to the undersigned and as represented, and that said Equipment has been accepted by the undersigned and complies with all terms of the Lease. Consequently, you are hereby authorized to pay for the Equipment in accordance with the terms of any purchase orders for the same.

2. In the future, in the event the Equipment fails to perform as expected or represented we will continue to honor the Lease in all respects and continue to make our rental and other payments thereunder in the normal course of business and we will look solely to the vendor, distributor or manufacturer for recourse.

3. We acknowledge that Lessor is neither the vendor nor manufacturer or distributor of the Equipment and has no control, knowledge or familiarity with the condition, capacity, functioning or other characteristics of the Equipment.

4. The serial number for each item of Equipment which is set forth on Exhibit "A" to the Lease is correct.

This certificate shall not be considered to alter, construe, or amend the terms of the Lease.

Lessee: GILA COUNTY

_____
Witness

Marian Sheppard
Chief Deputy Clerk of the Board

By: _____
(Authorized Signature)

Michael A. Pastor, Chairman Board of Supervisors
(Print name and title)

Date: _____

EXHIBIT F

Security Documents

[Attach Security Documents here]

Form **W-9**
(Rev. December 2011)
Department of the Treasury
Internal Revenue Service

Request for Taxpayer Identification Number and Certification

Give Form to the requester. Do not send to the IRS.

Print or type
See Specific Instructions on page 2.

Name (as shown on your income tax return)
Gila County

Business name/disregarded entity name, if different from above

Check appropriate box for federal tax classification:
☐ Individual/sole proprietor ☐ C Corporation ☐ S Corporation ☐ Partnership ☐ Trust/estate

☐ Limited liability company. Enter the tax classification (C=C corporation, S=S corporation, P=partnership) ▶

☐ Exempt payee

☑ Other (see instructions) ▶

Address (number, street, and apt. or suite no.)
1400 E. Ash Street

Requester's name and address (optional)

City, state, and ZIP code
Globe, AZ 85501

List account number(s) here (optional)

Part I Taxpayer Identification Number (TIN)

Enter your TIN in the appropriate box. The TIN provided must match the name given on the "Name" line to avoid backup withholding. For individuals, this is your social security number (SSN). However, for a resident alien, sole proprietor, or disregarded entity, see the Part I instructions on page 3. For other entities, it is your employer identification number (EIN). If you do not have a number, see *How to get a TIN* on page 3.

Note. If the account is in more than one name, see the chart on page 4 for guidelines on whose number to enter.

Social security number

			–			–				

Employer identification number

8	6	–	6	0	0	0	4	4	4

Part II Certification

Under penalties of perjury, I certify that:

1. The number shown on this form is my correct taxpayer identification number (or I am waiting for a number to be issued to me), and
2. I am not subject to backup withholding because: (a) I am exempt from backup withholding, or (b) I have not been notified by the Internal Revenue Service (IRS) that I am subject to backup withholding as a result of a failure to report all interest or dividends, or (c) the IRS has notified me that I am no longer subject to backup withholding, and
3. I am a U.S. citizen or other U.S. person (defined below).

Certification instructions. You must cross out item 2 above if you have been notified by the IRS that you are currently subject to backup withholding because you have failed to report all interest and dividends on your tax return. For real estate transactions, item 2 does not apply. For mortgage interest paid, acquisition or abandonment of secured property, cancellation of debt, contributions to an individual retirement arrangement (IRA), and generally, payments other than interest and dividends, you are not required to sign the certification, but you must provide your correct TIN. See the instructions on page 4.

Sign Here | **Signature of U.S. person ▶** | **Date ▶**

General Instructions

Section references are to the Internal Revenue Code unless otherwise noted.

Purpose of Form

A person who is required to file an information return with the IRS must obtain your correct taxpayer identification number (TIN) to report, for example, income paid to you, real estate transactions, mortgage interest you paid, acquisition or abandonment of secured property, cancellation of debt, or contributions you made to an IRA.

Use Form W-9 only if you are a U.S. person (including a resident alien), to provide your correct TIN to the person requesting it (the requester) and, when applicable, to:

1. Certify that the TIN you are giving is correct (or you are waiting for a number to be issued),
2. Certify that you are not subject to backup withholding, or
3. Claim exemption from backup withholding if you are a U.S. exempt payee. If applicable, you are also certifying that as a U.S. person, your allocable share of any partnership income from a U.S. trade or business is not subject to the withholding tax on foreign partners' share of effectively connected income.

Note. If a requester gives you a form other than Form W-9 to request your TIN, you must use the requester's form if it is substantially similar to this Form W-9.

Definition of a U.S. person. For federal tax purposes, you are considered a U.S. person if you are:

- An individual who is a U.S. citizen or U.S. resident alien,
- A partnership, corporation, company, or association created or organized in the United States or under the laws of the United States,
- An estate (other than a foreign estate), or
- A domestic trust (as defined in Regulations section 301.7701-7).

Special rules for partnerships. Partnerships that conduct a trade or business in the United States are generally required to pay a withholding tax on any foreign partners' share of income from such business. Further, in certain cases where a Form W-9 has not been received, a partnership is required to presume that a partner is a foreign person, and pay the withholding tax. Therefore, if you are a U.S. person that is a partner in a partnership conducting a trade or business in the United States, provide Form W-9 to the partnership to establish your U.S. status and avoid withholding on your share of partnership income.

The person who gives Form W-9 to the partnership for purposes of establishing its U.S. status and avoiding withholding on its allocable share of net income from the partnership conducting a trade or business in the United States is in the following cases:

- The U.S. owner of a disregarded entity and not the entity,
- The U.S. grantor or other owner of a grantor trust and not the trust, and
- The U.S. trust (other than a grantor trust) and not the beneficiaries of the trust.

Foreign person. If you are a foreign person, do not use Form W-9. Instead, use the appropriate Form W-8 (see Publication 515, Withholding of Tax on Nonresident Aliens and Foreign Entities).

Nonresident alien who becomes a resident alien. Generally, only a nonresident alien individual may use the terms of a tax treaty to reduce or eliminate U.S. tax on certain types of income. However, most tax treaties contain a provision known as a "saving clause." Exceptions specified in the saving clause may permit an exemption from tax to continue for certain types of income even after the payee has otherwise become a U.S. resident alien for tax purposes.

If you are a U.S. resident alien who is relying on an exception contained in the saving clause of a tax treaty to claim an exemption from U.S. tax on certain types of income, you must attach a statement to Form W-9 that specifies the following five items:

1. The treaty country. Generally, this must be the same treaty under which you claimed exemption from tax as a nonresident alien.

2. The treaty article addressing the income.

3. The article number (or location) in the tax treaty that contains the saving clause and its exceptions.

4. The type and amount of income that qualifies for the exemption from tax.

5. Sufficient facts to justify the exemption from tax under the terms of the treaty article.

Example. Article 20 of the U.S.-China income tax treaty allows an exemption from tax for scholarship income received by a Chinese student temporarily present in the United States. Under U.S. law, this student will become a resident alien for tax purposes if his or her stay in the United States exceeds 5 calendar years. However, paragraph 2 of the first Protocol to the U.S.-China treaty (dated April 30, 1984) allows the provisions of Article 20 to continue to apply even after the Chinese student becomes a resident alien of the United States. A Chinese student who qualifies for this exception (under paragraph 2 of the first protocol) and is relying on this exception to claim an exemption from tax on his or her scholarship or fellowship income would attach to Form W-9 a statement that includes the information described above to support that exemption.

If you are a nonresident alien or a foreign entity not subject to backup withholding, give the requester the appropriate completed Form W-8.

What is backup withholding? Persons making certain payments to you must under certain conditions withhold and pay to the IRS a percentage of such payments. This is called "backup withholding." Payments that may be subject to backup withholding include interest, tax-exempt interest, dividends, broker and barter exchange transactions, rents, royalties, nonemployee pay, and certain payments from fishing boat operators. Real estate transactions are not subject to backup withholding.

You will not be subject to backup withholding on payments you receive if you give the requester your correct TIN, make the proper certifications, and report all your taxable interest and dividends on your tax return.

Payments you receive will be subject to backup withholding if:

1. You do not furnish your TIN to the requester,

2. You do not certify your TIN when required (see the Part II instructions on page 3 for details),

3. The IRS tells the requester that you furnished an incorrect TIN,

4. The IRS tells you that you are subject to backup withholding because you did not report all your interest and dividends on your tax return (for reportable interest and dividends only), or

5. You do not certify to the requester that you are not subject to backup withholding under 4 above (for reportable interest and dividend accounts opened after 1983 only).

Certain payees and payments are exempt from backup withholding. See the instructions below and the separate Instructions for the Requester of Form W-9.

Also see *Special rules for partnerships* on page 1.

Updating Your Information

You must provide updated information to any person to whom you claimed to be an exempt payee if you are no longer an exempt payee and anticipate receiving reportable payments in the future from this person. For example, you may need to provide updated information if you are a C corporation that elects to be an S corporation, or if you no longer are tax exempt. In addition, you must furnish a new Form W-9 if the name or TIN changes for the account, for example, if the grantor of a grantor trust dies.

Penalties

Failure to furnish TIN. If you fail to furnish your correct TIN to a requester, you are subject to a penalty of $50 for each such failure unless your failure is due to reasonable cause and not to willful neglect.

Civil penalty for false information with respect to withholding. If you make a false statement with no reasonable basis that results in no backup withholding, you are subject to a $500 penalty.

Criminal penalty for falsifying information. Willfully falsifying certifications or affirmations may subject you to criminal penalties including fines and/or imprisonment.

Misuse of TINs. If the requester discloses or uses TINs in violation of federal law, the requester may be subject to civil and criminal penalties.

Specific Instructions

Name

If you are an individual, you must generally enter the name shown on your income tax return. However, if you have changed your last name, for instance, due to marriage without informing the Social Security Administration of the name change, enter your first name, the last name shown on your social security card, and your new last name.

If the account is in joint names, list first, and then circle, the name of the person or entity whose number you entered in Part I of the form.

Sole proprietor. Enter your individual name as shown on your income tax return on the "Name" line. You may enter your business, trade, or "doing business as (DBA)" name on the "Business name/disregarded entity name" line.

Partnership, C Corporation, or S Corporation. Enter the entity's name on the "Name" line and any business, trade, or "doing business as (DBA) name" on the "Business name/disregarded entity name" line.

Disregarded entity. Enter the owner's name on the "Name" line. The name of the entity entered on the "Name" line should never be a disregarded entity. The name on the "Name" line must be the name shown on the income tax return on which the income will be reported. For example, if a foreign LLC that is treated as a disregarded entity for U.S. federal tax purposes has a domestic owner, the domestic owner's name is required to be provided on the "Name" line. If the direct owner of the entity is also a disregarded entity, enter the first owner that is not disregarded for federal tax purposes. Enter the disregarded entity's name on the "Business name/disregarded entity name" line. If the owner of the disregarded entity is a foreign person, you must complete an appropriate Form W-8.

Note. Check the appropriate box for the federal tax classification of the person whose name is entered on the "Name" line (Individual/sole proprietor, Partnership, C Corporation, S Corporation, Trust/estate).

Limited Liability Company (LLC). If the person identified on the "Name" line is an LLC, check the "Limited liability company" box only and enter the appropriate code for the tax classification in the space provided. If you are an LLC that is treated as a partnership for federal tax purposes, enter "P" for partnership. If you are an LLC that has filed a Form 8832 or a Form 2553 to be taxed as a corporation, enter "C" for C corporation or "S" for S corporation. If you are an LLC that is disregarded as an entity separate from its owner under Regulation section 301.7701-3 (except for employment and excise tax), do not check the LLC box unless the owner of the LLC (required to be identified on the "Name" line) is another LLC that is not disregarded for federal tax purposes. If the LLC is disregarded as an entity separate from its owner, enter the appropriate tax classification of the owner identified on the "Name" line.

Other entities. Enter your business name as shown on required federal tax documents on the "Name" line. This name should match the name shown on the charter or other legal document creating the entity. You may enter any business, trade, or DBA name on the "Business name/ disregarded entity name" line.

Exempt Payee

If you are exempt from backup withholding, enter your name as described above and check the appropriate box for your status, then check the "Exempt payee" box in the line following the "Business name/ disregarded entity name," sign and date the form.

Generally, individuals (including sole proprietors) are not exempt from backup withholding. Corporations are exempt from backup withholding for certain payments, such as interest and dividends.

Note. If you are exempt from backup withholding, you should still complete this form to avoid possible erroneous backup withholding.

The following payees are exempt from backup withholding:

1. An organization exempt from tax under section 501(a), any IRA, or a custodial account under section 403(b)(7) if the account satisfies the requirements of section 401(f)(2),

2. The United States or any of its agencies or instrumentalities,

3. A state, the District of Columbia, a possession of the United States, or any of their political subdivisions or instrumentalities,

4. A foreign government or any of its political subdivisions, agencies, or instrumentalities, or

5. An international organization or any of its agencies or instrumentalities.

Other payees that may be exempt from backup withholding include:

6. A corporation,

7. A foreign central bank of issue,

8. A dealer in securities or commodities required to register in the United States, the District of Columbia, or a possession of the United States,

9. A futures commission merchant registered with the Commodity Futures Trading Commission,

10. A real estate investment trust,

11. An entity registered at all times during the tax year under the Investment Company Act of 1940,

12. A common trust fund operated by a bank under section 584(a),

13. A financial institution,

14. A middleman known in the investment community as a nominee or custodian, or

15. A trust exempt from tax under section 664 or described in section 4947.

The following chart shows types of payments that may be exempt from backup withholding. The chart applies to the exempt payees listed above, 1 through 15.

IF the payment is for . . .	THEN the payment is exempt for . . .
Interest and dividend payments	All exempt payees except for 9
Broker transactions	Exempt payees 1 through 5 and 7 through 13. Also, C corporations.
Barter exchange transactions and patronage dividends	Exempt payees 1 through 5
Payments over $600 required to be reported and direct sales over $5,000 [1]	Generally, exempt payees 1 through 7 [2]

[1] See Form 1099-MISC, Miscellaneous Income, and its instructions.

[2] However, the following payments made to a corporation and reportable on Form 1099-MISC are not exempt from backup withholding: medical and health care payments, attorneys' fees, gross proceeds paid to an attorney, and payments for services paid by a federal executive agency.

Part I. Taxpayer Identification Number (TIN)

Enter your TIN in the appropriate box. If you are a resident alien and you do not have and are not eligible to get an SSN, your TIN is your IRS individual taxpayer identification number (ITIN). Enter it in the social security number box. If you do not have an ITIN, see *How to get a TIN* below.

If you are a sole proprietor and you have an EIN, you may enter either your SSN or EIN. However, the IRS prefers that you use your SSN.

If you are a single-member LLC that is disregarded as an entity separate from its owner (see *Limited Liability Company (LLC)* on page 2), enter the owner's SSN (or EIN, if the owner has one). Do not enter the disregarded entity's EIN. If the LLC is classified as a corporation or partnership, enter the entity's EIN.

Note. See the chart on page 4 for further clarification of name and TIN combinations.

How to get a TIN. If you do not have a TIN, apply for one immediately. To apply for an SSN, get Form SS-5, Application for a Social Security Card, from your local Social Security Administration office or get this form online at *www.ssa.gov*. You may also get this form by calling 1-800-772-1213. Use Form W-7, Application for IRS Individual Taxpayer Identification Number, to apply for an ITIN, or Form SS-4, Application for Employer Identification Number, to apply for an EIN. You can apply for an EIN online by accessing the IRS website at *www.irs.gov/businesses* and clicking on Employer Identification Number (EIN) under Starting a Business. You can get Forms W-7 and SS-4 from the IRS by visiting IRS.gov or by calling 1-800-TAX-FORM (1-800-829-3676).

If you are asked to complete Form W-9 but do not have a TIN, write "Applied For" in the space for the TIN, sign and date the form, and give it to the requester. For interest and dividend payments, and certain payments made with respect to readily tradable instruments, generally you will have 60 days to get a TIN and give it to the requester before you are subject to backup withholding on payments. The 60-day rule does not apply to other types of payments. You will be subject to backup withholding on all such payments until you provide your TIN to the requester.

Note. Entering "Applied For" means that you have already applied for a TIN or that you intend to apply for one soon.

Caution: *A disregarded domestic entity that has a foreign owner must use the appropriate Form W-8.*

Part II. Certification

To establish to the withholding agent that you are a U.S. person, or resident alien, sign Form W-9. You may be requested to sign by the withholding agent even if item 1, below, and items 4 and 5 on page 4 indicate otherwise.

For a joint account, only the person whose TIN is shown in Part I should sign (when required). In the case of a disregarded entity, the person identified on the "Name" line must sign. Exempt payees, see *Exempt Payee* on page 3.

Signature requirements. Complete the certification as indicated in items 1 through 3, below, and items 4 and 5 on page 4.

1. Interest, dividend, and barter exchange accounts opened before 1984 and broker accounts considered active during 1983. You must give your correct TIN, but you do not have to sign the certification.

2. Interest, dividend, broker, and barter exchange accounts opened after 1983 and broker accounts considered inactive during 1983. You must sign the certification or backup withholding will apply. If you are subject to backup withholding and you are merely providing your correct TIN to the requester, you must cross out item 2 in the certification before signing the form.

3. Real estate transactions. You must sign the certification. You may cross out item 2 of the certification.

4. Other payments. You must give your correct TIN, but you do not have to sign the certification unless you have been notified that you have previously given an incorrect TIN. "Other payments" include payments made in the course of the requester's trade or business for rents, royalties, goods (other than bills for merchandise), medical and health care services (including payments to corporations), payments to a nonemployee for services, payments to certain fishing boat crew members and fishermen, and gross proceeds paid to attorneys (including payments to corporations).

5. Mortgage interest paid by you, acquisition or abandonment of secured property, cancellation of debt, qualified tuition program payments (under section 529), IRA, Coverdell ESA, Archer MSA or HSA contributions or distributions, and pension distributions. You must give your correct TIN, but you do not have to sign the certification.

What Name and Number To Give the Requester

For this type of account:	Give name and SSN of:
1. Individual	The individual
2. Two or more individuals (joint account)	The actual owner of the account or, if combined funds, the first individual on the account [1]
3. Custodian account of a minor (Uniform Gift to Minors Act)	The minor [2]
4. a. The usual revocable savings trust (grantor is also trustee)	The grantor-trustee [1]
b. So-called trust account that is not a legal or valid trust under state law	The actual owner [1]
5. Sole proprietorship or disregarded entity owned by an individual	The owner [3]
6. Grantor trust filing under Optional Form 1099 Filing Method 1 (see Regulation section 1.671-4(b)(2)(i)(A))	The grantor*
For this type of account:	**Give name and EIN of:**
7. Disregarded entity not owned by an individual	The owner
8. A valid trust, estate, or pension trust	Legal entity [4]
9. Corporation or LLC electing corporate status on Form 8832 or Form 2553	The corporation
10. Association, club, religious, charitable, educational, or other tax-exempt organization	The organization
11. Partnership or multi-member LLC	The partnership
12. A broker or registered nominee	The broker or nominee
13. Account with the Department of Agriculture in the name of a public entity (such as a state or local government, school district, or prison) that receives agricultural program payments	The public entity
14. Grantor trust filing under the Form 1041 Filing Method or the Optional Form 1099 Filing Method 2 (see Regulation section 1.671-4(b)(2)(i)(B))	The trust

[1] List first and circle the name of the person whose number you furnish. If only one person on a joint account has an SSN, that person's number must be furnished.

[2] Circle the minor's name and furnish the minor's SSN.

[3] You must show your individual name and you may also enter your business or "DBA" name on the "Business name/disregarded entity" name line. You may use either your SSN or EIN (if you have one), but the IRS encourages you to use your SSN.

[4] List first and circle the name of the trust, estate, or pension trust. (Do not furnish the TIN of the personal representative or trustee unless the legal entity itself is not designated in the account title.) Also see *Special rules for partnerships* on page 1.

***Note.** Grantor also must provide a Form W-9 to trustee of trust.

Note. If no name is circled when more than one name is listed, the number will be considered to be that of the first name listed.

Secure Your Tax Records from Identity Theft

Identity theft occurs when someone uses your personal information such as your name, social security number (SSN), or other identifying information, without your permission, to commit fraud or other crimes. An identity thief may use your SSN to get a job or may file a tax return using your SSN to receive a refund.

To reduce your risk:

- Protect your SSN,
- Ensure your employer is protecting your SSN, and
- Be careful when choosing a tax preparer.

If your tax records are affected by identity theft and you receive a notice from the IRS, respond right away to the name and phone number printed on the IRS notice or letter.

If your tax records are not currently affected by identity theft but you think you are at risk due to a lost or stolen purse or wallet, questionable credit card activity or credit report, contact the IRS Identity Theft Hotline at 1-800-908-4490 or submit Form 14039.

For more information, see Publication 4535, Identity Theft Prevention and Victim Assistance.

Victims of identity theft who are experiencing economic harm or a system problem, or are seeking help in resolving tax problems that have not been resolved through normal channels, may be eligible for Taxpayer Advocate Service (TAS) assistance. You can reach TAS by calling the TAS toll-free case intake line at 1-877-777-4778 or TTY/TDD 1-800-829-4059.

Protect yourself from suspicious emails or phishing schemes. Phishing is the creation and use of email and websites designed to mimic legitimate business emails and websites. The most common act is sending an email to a user falsely claiming to be an established legitimate enterprise in an attempt to scam the user into surrendering private information that will be used for identity theft.

The IRS does not initiate contacts with taxpayers via emails. Also, the IRS does not request personal detailed information through email or ask taxpayers for the PIN numbers, passwords, or similar secret access information for their credit card, bank, or other financial accounts.

If you receive an unsolicited email claiming to be from the IRS, forward this message to *phishing@irs.gov*. You may also report misuse of the IRS name, logo, or other IRS property to the Treasury Inspector General for Tax Administration at 1-800-366-4484. You can forward suspicious emails to the Federal Trade Commission at: *spam@uce.gov* or contact them at *www.ftc.gov/idtheft* or 1-877-IDTHEFT (1-877-438-4338).

Visit IRS.gov to learn more about identity theft and how to reduce your risk.

Privacy Act Notice

Section 6109 of the Internal Revenue Code requires you to provide your correct TIN to persons (including federal agencies) who are required to file information returns with the IRS to report interest, dividends, or certain other income paid to you; mortgage interest you paid; the acquisition or abandonment of secured property; the cancellation of debt; or contributions you made to an IRA, Archer MSA, or HSA. The person collecting this form uses the information on the form to file information returns with the IRS, reporting the above information. Routine uses of this information include giving it to the Department of Justice for civil and criminal litigation and to cities, states, the District of Columbia, and U.S. possessions for use in administering their laws. The information also may be disclosed to other countries under a treaty, to federal and state agencies to enforce civil and criminal laws, or to federal law enforcement and intelligence agencies to combat terrorism. You must provide your TIN whether or not you are required to file a tax return. Under section 3406, payers must generally withhold a percentage of taxable interest, dividend, and certain other payments to a payee who does not give a TIN to the payer. Certain penalties may also apply for providing false or fraudulent information.

Form **8038-G**
(Rev. September 2011)
Department of the Treasury
Internal Revenue Service

Information Return for Tax-Exempt Governmental Obligations

▶ Under Internal Revenue Code section 149(e)
▶ See separate instructions.
Caution: *If the issue price is under $100,000, use Form 8038-GC.*

OMB No. 1545-0720

Part I Reporting Authority

If **Amended Return**, check here ▶ ☐

1 Issuer's name **Gila County, Arizona**	2 Issuer's employer identification number (EIN) **86-6000444**
3a Name of person (other than issuer) with whom the IRS may communicate about this return (see instructions)	3b Telephone number of other person shown on 3a
4 Number and street (or P.O. box if mail is not delivered to street address) **1400 E. Ash Street** / Room/suite ------	5 Report number *(For IRS Use Only)* 3
6 City, town, or post office, state, and ZIP code **Globe, Arizona 85501**	7 Date of issue **02/19/2013**
8 Name of issue **$297,461 Lease Purchase Agreement**	9 CUSIP number **None**
10a Name and title of officer or other employee of the issuer whom the IRS may call for more information (see instructions) **John Nelson - Board Clerk**	10b Telephone number of officer or other employee shown on 10a **928-402-8753**

Part II Type of Issue (enter the issue price). See the instructions and attach schedule.

11	Education	11	0	
12	Health and hospital	12	0	
13	Transportation	13	0	
14	Public safety	14	0	
15	Environment (including sewage bonds)	15	0	
16	Housing	16	0	
17	Utilities	17	0	
18	Other. Describe ▶ **Lease Purchase Agreement**	18	231,336	00
19	If obligations are TANs or RANs, check only box 19a ▶ ☐			
	If obligations are BANs, check only box 19b ▶ ☐			
20	If obligations are in the form of a lease or installment sale, check box ▶ ☑			

Part III Description of Obligations. Complete for the entire issue for which this form is being filed.

	(a) Final maturity date	(b) Issue price	(c) Stated redemption price at maturity	(d) Weighted average maturity	(e) Yield
21	02/15/17	$ 231,336	$ N/A	2.528 years	3.250 %

Part IV Uses of Proceeds of Bond Issue (including underwriters' discount)

22	Proceeds used for accrued interest			22	N/A
23	Issue price of entire issue (enter amount from line 21, column (b))			23	N/A
24	Proceeds used for bond issuance costs (including underwriters' discount)	24	N/A		
25	Proceeds used for credit enhancement	25	N/A		
26	Proceeds allocated to reasonably required reserve or replacement fund	26	N/A		
27	Proceeds used to currently refund prior issues	27	N/A		
28	Proceeds used to advance refund prior issues	28	N/A		
29	Total (add lines 24 through 28)			29	N/A
30	Nonrefunding proceeds of the issue (subtract line 29 from line 23 and enter amount here)			30	N/A

Part V Description of Refunded Bonds. Complete this part only for refunding bonds.

31	Enter the remaining weighted average maturity of the bonds to be currently refunded ▶	N/A	years
32	Enter the remaining weighted average maturity of the bonds to be advance refunded ▶	N/A	years
33	Enter the last date on which the refunded bonds will be called (MM/DD/YYYY) ▶	N/A	
34	Enter the date(s) the refunded bonds were issued ▶ (MM/DD/YYYY)	N/A	

Part VI Miscellaneous

35	Enter the amount of the state volume cap allocated to the issue under section 141(b)(5)	35	N/A	
36a	Enter the amount of gross proceeds invested or to be invested in a guaranteed investment contract (GIC) (see instructions)	36a	N/A	
b	Enter the final maturity date of the GIC ▶ N/A			
c	Enter the name of the GIC provider ▶ N/A			
37	Pooled financings: Enter the amount of the proceeds of this issue that are to be used to make loans to other governmental units	37	N/A	

38a If this issue is a loan made from the proceeds of another tax-exempt issue, check box ▶ ☐ and enter the following information:

b Enter the date of the master pool obligation ▶ N/A

c Enter the EIN of the issuer of the master pool obligation ▶ N/A

d Enter the name of the issuer of the master pool obligation ▶ N/A

39 If the issuer has designated the issue under section 265(b)(3)(B)(i)(III) (small issuer exception), check box ▶ ☑

40 If the issuer has elected to pay a penalty in lieu of arbitrage rebate, check box ▶ ☐

41a If the issuer has identified a hedge, check here ▶ ☐ and enter the following information:

b Name of hedge provider ▶ N/A

c Type of hedge ▶ N/A

d Term of hedge ▶ N/A

42 If the issuer has superintegrated the hedge, check box ▶ ☐

43 If the issuer has established written procedures to ensure that all nonqualified bonds of this issue are remediated according to the requirements under the Code and Regulations (see instructions), check box ▶ ☐

44 If the issuer has established written procedures to monitor the requirements of section 148, check box ▶ ☐

45a If some portion of the proceeds was used to reimburse expenditures, check here ▶ ☐ and enter the amount of reimbursement ▶ N/A

b Enter the date the official intent was adopted ▶ N/A

Signature and Consent

Under penalties of perjury, I declare that I have examined this return and accompanying schedules and statements, and to the best of my knowledge and belief, they are true, correct, and complete. I further declare that I consent to the IRS's disclosure of the issuer's return information, as necessary to process this return, to the person that I have authorized above.

X
Signature of issuer's authorized representative Date

John Nelson - Board Clerk
Type or print name and title

Paid Preparer Use Only

Print/Type preparer's name	Preparer's signature	Date	Check ☐ if self-employed	PTIN
Mark I. Tsuyuki				P01609368

Firm's name ▶	Zions First National Bank	Firm's EIN ▶	87-0189025
Firm's address ▶	One South Main Street, Suite 1700, Salt Lake City, Utah 84133	Phone no.	801-844-7817

RESOLUTION NO. 13-02-04

A RESOLUTION OF THE GILA COUNTY BOARD OF SUPERVISORS TO APPROVE A LEASE PURCHASE AGREEMENT THAT HAS BEEN PRESENTED TO GILA COUNTY BY COLORADO CUSTOMWARE, INC. AND ZIONS FIRST NATIONAL BANK FOR GILA COUNTY TO FINANCE THE REMAINING FIVE YEARS ON THE MASTER SERVICES AGREEMENT BETWEEN GILA COUNTY AND COLORADO CUSTOMWARE, INC. FOR REALWARE, FIELDWARE AND GEOWARE SOFTWARE SYSTEMS.

WHEREAS, the Gila County Board of Supervisors recognizes the opportunity for the savings over the course of the five year remaining payment commitment to Colorado CustomWare, Inc.; and

WHEREAS, the Gila County Board of Supervisors has determined that a true and very real need exists for the leasing of the equipment described in the Equipment Lease Agreement presented to this meeting; and

WHEREAS, the Gila County Board of Supervisors has reviewed the form of the Equipment Lease Agreement and has found the terms and conditions thereof acceptable to the Gila County Board of Supervisors; and

WHEREAS, the Gila County Board of Supervisors has taken the necessary steps, under applicable law to arrange for the leasing of such equipment under the Equipment Lease Agreement.

THEREFORE, BE IT RESOLVED that we, the Gila County board of Supervisors, have determined that the terms of said Equipment Lease Agreement are in the best interests of Gila County for the leasing of the equipment described therein; and thereby authorize its Chairman to execute and deliver the Equipment Lease Agreement and any related documents necessary to the consummation of the transactions contemplated by the Equipment Lease Agreement for and on behalf of; and that the full body of the Gila County Board of Supervisors are hereby authorized and directed to fulfill all obligations under the terms of the Equipment Lease Agreement.

PASSED AND ADOPTED this 19th day of February 2013, at Globe, Gila County, Arizona

Attest:

GILA COUNTY BOARD OF SUPERVISORS

_____

Marian Sheppard
Chief Deputy Clerk of the Board

_____

Michael A. Pastor, Chairman

Approved as to form:

_____

Bryan Chambers
Deputy Attorney Principal

Anti-Terrorism Warranty: Pursuant to **A.R.S. §35-393.06(B) and 35-391.06(A)** the Contractor certifies that it does not have scrutinized business operations in Iran or Sudan and that they are in compliance with the Export Administration Act and not on the Excluded Parties List.

Legal Arizona Workers Act Compliance: Pursuant to A.R.S. § 44-4401, Contractor hereby warrants that it will at all times during the term of this Contract comply with all federal immigration laws applicable to Firm's employment of its employees, and with the requirements of A.R.S. § 23-214 (A) (together the "State and Federal Immigration Laws"). Contractor shall further ensure that each subcontractor who performs any work for Contractor under this contract likewise complies with the State and Federal Immigration Laws.

County shall have the right at any time to inspect the employment related papers and records of Contractor and any subcontractor performing work on this Contract solely in order to verify such party's compliance with the State and Federal Immigration Laws. This right of inspection only applies to employment related papers and other records reasonably calculated to verify compliance with State and Federal Immigration Laws. This provision does not give County the right to inspect any other Contractor records. Further, this right of inspection does not allow the inspection of any paper or record for which federal statute or regulation prohibits disclosure to County.

Any breach of Contractor's or any subcontractor's warranty of compliance with the State and Federal Immigration Laws, or of any other provision of this section, shall be deemed to be a material breach of this Contract subjecting Contractor to penalties up to and including suspension or termination of this Contract. If the breach is by a subcontractor, and the subcontract is suspended or terminated as a result, Contractor shall be required to take such steps as may be necessary to either self-perform the services that would have been provided under the subcontract or retain a replacement subcontractor as soon as possible so as not to delay project completion.

Contractor shall advise each subcontractor of County's rights, and the subcontractor's obligations, under this Article by including a provision in each subcontract substantially in the following form: "Subcontractor hereby warrants that it will at all times during the term of this contract comply with all federal immigration laws applicable to Subcontractor's employees, and with the requirements of A.R.S. § 23-214 (A). Subcontractor further agrees that County may inspect the Subcontractor's employment related books and records to insure that Subcontractor is in compliance with these requirements. Any breach of this paragraph by Subcontractor will be deemed to be a material breach of this contract subjecting Subcontractor to penalties up to and including suspension or termination of this contract."

Cancellation: This agreement is subject to cancellation pursuant to A.R.S. § 38-511.

GILA COUNTY:

GILA COUNTY MANAGER

_____

Don E. McDaniel Jr.

_____

Date

APPROVED AS TO FORM:

_____

Bryan B. Chambers, Deputy Attorney Principal
***for* Bradley D. Beauchamp, County Attorney**

Contractor:

ZIONS FIRST NATIONAL BANK

_____

Individual Authorized to Sign

_____

Print Name

_____

Title

_____

Date

GILA COUNTY ATTORNEY
Bradley D. Beauchamp

Re: County Attorney's Office "approval as to form" of contract or agreement.

To whom it may concern:

The County Attorney's Office has reviewed the contract or agreement attached to this agenda item and has determined that it is in its proper form and is within the powers and authority granted under the laws of this state to the public agency requesting the County Attorney's Office review.

Explanation of the Gila County Attorney's Office "Approval as to Form" Review

The Gila County Attorney's Office is often called upon to review contracts and other agreements between public entities represented by the County Attorney and private vendors, contractors, and individuals.

In performing this review, the County Attorney's Office reviews these contracts to see that they are in "proper form" prior to their execution. "Proper form" means that the contract conforms to fundamental contract law, conforms to specific legislative requirements, and is within the powers and authority granted to the public agency. It does not mean that the County Attorney's Office approves of or supports the policy objectives contained in the contract. That approval is solely the province of the public agency through its elected body.

The public agency or department submitting the contract for review has the responsibility to read and understand the contract in order to completely understand its obligations under the contract if it is ultimately approved by the public entity's board. This is because while the County Attorney's Office can approve the contract as to form, the office may not have any idea whether the public agency has the capacity to actually comply with its contractual obligations. Also, the County Attorney's Office does not monitor contract compliance. Hence the public entity or

submitting department will need to be prepared to monitor their own compliance. A thorough knowledge of the provisions of the contract will be necessary to monitor compliance.

Before signing a contract "approved as to form," the County Attorney's Office will answer any questions or concerns the public agency has about the contract. It is the responsibility of the public agency or department submitting the contract for review to ask any specific questions or address any concerns it has about the contract to the County Attorney's Office at the same time they submit the contract for review. Making such an inquiry also helps improve the County Attorney's Office review of the contract because it will help focus the review on specific issues that are of greatest concern to the public agency. Failing to make such an inquiry when the agency does have issues or concerns will decrease the ability of the County Attorney's Office to meaningfully review the agreement.

ARF-1644 **Consent Agenda Item 4- A**

Regular BOS Meeting

Meeting Date: 02/19/2013

Submitted For:	Malissa Buzan, CAP/Housing Services Manager	Submitted By:	Cecilia Bejarano, Executive Administrative Assistant, Community Services Division
Department:	Community Services Division	Division:	Comm. Action Program/Housing Servs.
Fiscal Year:	7/1/2012-6/30/2013	Budgeted?:	Yes
Contract Dates Begin & End:	7/1/20112-6/30/2013	Grant?:	Yes
Matching Requirement?:	No	Fund?:	Replacement

Information

Request/Subject

Amendment No. 1 to Independent Contractor Agreement Contract No. 07012012-13 with Arizona Community Action Association

Background Information

Arizona Community Action Association (ACAA) is a non-profit organization that, as part of its mission to promote economic self sufficiency for low-income Arizonans, administers energy program funding to provide weatherization services, utility repair and replacement, utility deposits and bill assistance.

What ACAA Does:

•Arizona Community Action Association promotes self-sufficiency by working with Community Action Agencies statewide to provide a hand up, the tools needed to become self-sufficient.
•Our members' services include case management and emergency assistance for food, utilities rent and eviction prevention, emergency shelter, financial assistance, resources, referrals and employment.

Original Independent Contractor Agreement No. 07012012-13 was approved by the Board of Supervisors on June 5, 2012.

Evaluation

Amendment No. 1 to Contract No. 07012012-13 will provide a new funding source from SemStream Arizona Propane in the amount of $8,255.69 to provide utility assistance to eligible residents in the Payson area of Gila County. Utility assistance will be provided to SemStream customers.

This Amendment will also allocate additional Utility Repair Replacement Dollars (URRD) in the amount of $48,000. Direct service dollars will go from $19,466 to $63,910.44 and Program Delivery Dollars will go from $1557 to $5112.56.

Conclusion

By the Board of Supervisors approving Amendment No. 1 to Contract No. 07012012-13, the Community Action Program will provide weatherization work, utility deposits, repair and replacement work and bill assistance to eligible citizens residing in Gila County.

Recommendation

The Community Action/Housing Services Manager recommends that the Board of Supervisors approve this amendment.

Suggested Motion

Approval of Amendment No. 1 to an Independent Contractor Agreement (Contract No. 07012012-13) between the Arizona Community Action Association (ACAA) and the Gila County Division of Community Services, Community Action Program, whereby ACAA will allocate SemStream Arizona Propane funds in the amount of $8,255.69 in order to provide propane assistance to eligible families residing in the Payson area of Gila County, and to allocate additional Utility Repair Replacement Deposit (URRD) funds in the amount of $48,000 in order to provide additional repair and replacement services to eligible familes residing in Gila County for the period beginning July 1, 2012, through June 30, 2013.

Attachments

Amendment No. 1 to Contract No. 07012012-13 ACAA

Independant Contract 07012012-13 ACAA

Legal Explanation

Arizona Community Action Association

Amendment No. One (1)
Independent Contractor Agreement
Contract No. 07012012-13

The Independent Contract Agreement dated June 5, 2012 between Arizona Community Action Association (ACAA) and **Gila County Division of Community Services** (hereinafter "Contractor") to conduct application intake and eligibility determination for utility bill assistance is hereby amended as follows:

Purpose of the Amendment:

1. To allocate SemStream Arizona Propane funds in the amount of **$8,255.69** in order to provide propane assistance to eligible families residing in Gila County:

   Program Requirements:

   1. Refer to the Home Energy Assistance Fund Policy Manual for guidelines on client documentation and verification.
   2. Applicant is required to be an adult member of the household and provide verification of resident at the utility service address.
   3. Proof of citizenship is not required for this program.
   4. Household income equal to or less than 200% of the current Federal Poverty Level.
   5. Household may not received assistance within the last 12 months from the date of the last application.
   6. Maximum grant amount is $600.00 per household. No credit can be given on an account.

2. To allocate additional URRD funds in the amount of **$48,000.00** ($44,444.44 for direct service and $3,555.56 for program delivery) in order to provide additional repair and replacement services to eligible families residing in Gila County:

Amendment to:

Section I. Services and Programs – 1.2 Fund Sources:

SemStream Arizona Propane funds : direct service dollar amount $8,255.69.

URRD Fund Source: Increase direct service amount dollars from $19,466.00 to $63,910.44, and program delivery dollars from $1,557.00 to $5,112.56.

Whole Agreement:

Unless otherwise noted herein, all other provisions of the original Agreement will remain in place for the duration of the original Agreement.

In Witness Whereof, the undersigned have executed this Amendment No. One (1), effective as of the effective date.

CONTRACTOR:
Gila County Board of Supervisors
Michael A. Pastor

_____
Chairman, Gila County
Date:_____

APPROVED AS TO FORM:
Bryan B. Chambers

_____
Chief Deputy County Attorney

_____
Date

Address:
5515 S. Apache Avenue, Suite 200
Globe, Arizona 85501

Arizona Community Action Association, an Arizona non-profit Corporation:

_____
Cynthia Zwick, Executive Director
Date: January 25, 2023

Address:

2700 N. 3rd Street, Suite 3040
Phoenix, Arizona 85004
(602) 604-0640
Fax No. (602) 604-0640
Email: czwick@azcaa.org

Arizona Community Action Association

INDEPENDENT CONTRACTOR AGREEMENT
2012-13 Utility Assistance Programs
Contract No. 07012012-13

This INDEPENDENT CONTRACTOR AGREEMENT (this "Agreement") is entered into as of the Effective Date set forth below by and between **Gila County Community Action Program, A Department of the Gila County Health and Community Services** (hereinafter "Contractor") and Arizona Community Action Association, an Arizona nonprofit corporation (hereinafter "ACAA").

RECITALS:

A. ACAA is a nonprofit organization that, as part of its mission to promote economic self sufficiency for low-income Arizonans, administers energy program funding to provide weatherization services, utility repair and replacement, utility deposits and bill assistance.

B. ACAA is receiving or expects to receive during the term of this Agreement funding from the fund sources listed in ***Section 1*** (the "Fund Sources") pursuant to Program Documents (as defined in ***Section 4***).

C. ACAA desires to subcontract with Contractor to obtain assistance with fulfilling ACAA's obligations under the Program Documents and Contractor desires to receive the funding described herein and use it to provide services in accordance with the Program Documents and this Agreement. **The total amount of the contract is $45,307.00.**

THEREFORE, in consideration of the terms and conditions set forth in this Agreement and intending to be bound, ACAA and Contractor hereby agree as follows:

1. Services and Programs.

1.1 Services. Contractor agrees, under the terms and conditions of this Agreement, to perform the following services for the programs listed in ***Section 1.2***: (i) conduct application intake services, (ii) make eligibility determinations, and (iii) where applicable, conduct weatherization work, utility deposits, repair and replacement work, and (iv) bill assistance. Contractor shall perform the foregoing services during the term set forth in ***Section 2***. ACAA will not exercise control over the specific methods used by Contractor or the specific manner in which Contractor performs services under this Agreement, but Contractor shall follow ACAA's instructions as to the result to be achieved. Contractor will receive ACAA's instructions through an employee of ACAA who is appointed to manage the program ("Program Manager"). Contractor may also received instructions from an ACAA employee designated to serve as a liaison between ACAA and Contractor ("Monitor").

1.2 Fund Sources. For purposes of this Agreement, the programs, Fund Sources and amount of funding to be allocated to Contractor will be as set forth in the following summary:

Fund Source(s)	Direct Service Amount (A)	Program Delivery (B)	Total Allocation (A+B)	Allowable Activities	Additional Information No credits can be given to accounts.
Utility Repair Replacement Deposit (URRD)	**$19,466.00**	**$1,557.00**	**$21,023.00**	Utility/Appliance Repair or Replacement Utility Deposit	**Refer to Exhibit A**: Utility Repair Replacement Deposit Policy Manual **Refer to Exhibit B**: Instructions for Verifying Citizenship and Non-Legal Permanent Resident (LPR) Status (8/2011 Edition) Agency makes guarantees and payments to utility companies and repair/replacement vendors. Service costs and program delivery costs are then reimbursed based on activity reports and invoices.
Southwest Gas (SWG) Bill Assistance Program	**$6,085.00**	**$0**	**$6,085.00**	Utility assistance for SWG customers	**Refer to Exhibit C**: Southwest Gas Bill Assistance Summary. No more than twenty-five percent (25%) of total allocation can be used for deposits. **Of total allocation, $1,521.00 can be used for deposits.** Agency makes guarantees and payments to utility company. Service costs and program delivery costs are then reimbursed based on activity reports and invoices.
Home Energy Assistance Fund (HEAF) **HEAF/Tribal**	**$2,244.00** **$5,651.00**	**$224.00** **$565.00**	**$2,468.00** **$6,216.00**	Utility assistance and deposits Utility assistance and deposits for Native Americans living on the reservation.	**Refer to Exhibit D**: Home Energy Assistance Policy Manual Agency makes guarantees and payments to utility companies. Service costs and program delivery costs are then reimbursed based on activity reports and invoices.
APS Crisis Bill Assistance	**$4,000.00**	**$400.00**	**$4,400.00**	Utility assistance for APS customers	**Refer to Exhibit E**: APS Crisis Bill Assistance Program Summary Agency makes guarantees and payments to utility company. Service costs and program delivery costs are then reimbursed based on activity reports and invoices.
Salt River Project (SRP) Bill Assistance	**$4,650.00**	**$465.00**	**$5,115.00**	Utility assistance and deposits for SRP customers only (including M-Power customers)	**Refer to Exhibit F**: SRP Bill Assistance Program Summary. The Arizona Dept. of Economic Security's Monthly 60% State Median Income applies to this program only. **See Exhibit H** Agency makes guarantees and payments to utility company. Service costs and program delivery costs are then reimbursed based on activity reports and invoices.
Total:	**$42,096.00**	**$3,211.00**	**$45,307.00**		

The summary above of certain provisions of the Program Documents is provided for Contractor's convenience and is not intended to be an exhaustive description of all material terms of the Program Documents. Contractor is advised to carefully review the Program Documents in their entirety. In the event of any conflict between this summary and the Program Documents, the terms of the Program Documents will control.

1.3 Training. Contractor will participate in any training provided by ACAA on dates and times selected by ACAA.

1.4 Program Modification. ACAA and the Fund Sources reserve the right to modify program eligibility guidelines and Program Documents. Contractor agrees to implement and comply with any and all modifications immediately after receipt of written notice of such modifications.

2. Term and Termination.

2.1 Term. Unless sooner terminated pursuant to ***Section 2.2***, the term of this Agreement will be for one year beginning on the later of full execution of this Agreement on **July 1, 2012** (the "Effective Date") and ending on **June 30, 2013**.

2.2 Termination. Either ACAA or Contractor may terminate this Agreement at any time, for any or no reason, by giving thirty (30) days written notice to the other party of its election to terminate. If a Fund Source terminates a program or otherwise discontinues funding to ACAA, then this Agreement will automatically terminate as to any services to be provided for that Fund Source.

2.3 Effect of Termination; Survival. Upon termination, Contractor's obligation to perform further services for ACAA shall terminate and ACAA's obligation to provide funding to Contractor for such services shall terminate, but the remainder of this Agreement shall continue in full force and effect.

3. Funding; Expenses; Nature of Relationship.

3.1 Funding; Payments to Contractor. Not later than the 15th day of each month, Contractor will submit an invoice to ACAA for all services Contractor performed during the prior month as required by ***Section 4.*** ACAA will endeavor to review Contractor's invoices and give notice to Contractor of any disallowed items within ten (10) business days after ACAA receives the invoice. ACAA will submit all approved portions of Contractor's invoice to the applicable Fund Sources. Contractor acknowledges and agrees that all invoices are subject to approval by the Fund Sources and ACAA's approval does not bind any Fund Source or constitute a guarantee by ACAA of payment to Contractor.

3.2 Request for Additional Funds. Contractor may submit in writing a request for additional funds to ACAA no earlier than November 30 of the current contract year. Requests for additional funds will be submitted to the Home Energy Assistance Fund Advisory Board of Directors on the next available agenda. Approval of request(s) will be based on: a) there are adequate funds available; b) agency is at an expenditure rate to ensure any additional funds will be expended; c) request is not being used to cover over expenditures. All approved requests will be submitted to the ACAA Board of Directors on the next available agenda for final review and approval.

3.3 Reimbursement of Expenses. ACAA may provide certain materials and supplies to Contractor for use in performing services under this Agreement. Except for such materials and supplies, and except to the extent the Program Documents permit reimbursement of expenses from the Fund Sources, Contractor shall be responsible for expenses that it incurs in performing services under this Agreement, and shall not be entitled to reimbursement from ACAA.

3.4 Expenditures. ACAA reserves the right to terminate, reduce, or reallocate funds to another Contractor within the service territory, if Contractor's expenditure rate, is not at a percentage to ensure one hundred percent expenditure of funds within the contract period. ACAA will conduct a review of agency expenditures on a quarterly basis, and will notify the Contractor of any concerns. It is the responsibility of the Contractor to monitor all contract expenditures and to ensure no over expenditures occur. If an over expenditure occurs, the Contractor is responsible for absorbing and/or returning the amount of the payment.

3.5 Advance Payments. Contractor may request a one-time advance in accordance with the established One-Time Advance Payment Policy approved by the Home Energy Assistance Advisory Board of Directors and the ACAA Board of Directors. Contractor may request the Advance Request Form through ACAA, if needed.

3.6 Nature of Relationship. As between ACAA and Contractor, ACAA shall have the same rights as the Funding Sources have under the applicable Program Documents. Contractor shall have only those rights expressly provided to Contractor under this Agreement. The relationship between ACAA and Contractor shall be that of independent contractors for purposes including tax law purposes and employment law purposes and not that of employer-employee, partners, joint venturers, or otherwise. Contractor acknowledges and agrees that Contractor shall have no right or opportunity to participate in any employee benefits plans, compensation plans, or other benefits that ACAA may offer to its employees, and that Contractor will not be treated as an employee for purposes of workers compensation laws, employment laws, or tax laws, including without limitation federal and state income tax laws, social security tax laws and unemployment contribution laws. Contractor agrees to comply with all laws applicable to independent contractors including, but not limited to, professional and tax licensing requirements and reporting and payment of applicable federal, state and local taxes, including without limitation income taxes and self-employment taxes.

3.7 Indemnification. Contractor agrees to indemnify, defend and hold ACAA and its directors, officers, employees and agents harmless for, from and against any tax or other liabilities, losses, costs, expenses (including attorneys' fees and court costs), penalties, claims, demands resulting from or arising out of a breach of this Agreement by Contractor or Contractor's employees or agents, or resulting from or arising out of rendering services under this Agreement by Contractor or Contractor's employees or agents or to the extent caused by the negligence or intentional misconduct of Contractor or Contractor's employees or agents. ACAA agrees to indemnify, defend and hold Contractor and its directors, officers, employees and agents harmless for, from and against any liabilities, losses, costs, expenses (including attorneys' fees and court costs), penalties, claims, demands to the extent caused by the negligence or intentional misconduct of ACAA or ACAA's employees or agents.

3.8 Insurance.

3.8.1 Contractor and any subcontractors shall procure and maintain, until all of their obligations have been satisfied, insurance against claims for injury to persons or damage to property which may arise from or in connection with the performance of the services hereunder by Contractor or Contractor's agents, representatives, employees or subcontractors. Contractor shall also procure and maintain all additional insurance coverage required by the Program Documents.

3.8.2 The insurance requirements herein are minimum requirements for this Agreement and in no way limit Contractor's indemnity obligations contained in this Agreement. ACAA makes no representation or warranty that the minimum limits contained herein are sufficient to protect Contractor from liabilities that might arise out of the performance of the work under this contract by Contractor, its agents, representatives, employees or subcontractors, and Contractor is free to purchase additional insurance.

3.8.3 Contractor shall provide coverage with limits of liability not less than those stated below.

1. *Commercial General Liability – Occurrence Form*

General Aggregate: The policy will have a combined single limit of $2,000,000 for each occurrence for bodily injury and property damage. The policy shall include bodily injury, property damage, personal injury and broad form contractual liability.

15. The policy shall be endorsed to include the following additional insured language: *"Arizona Community Action Association, shall be named as additional insured with respect to liability arising out of the activities performed by or on behalf of the Contractor".*

b. The policy shall contain a waiver of subrogation against Arizona Community Action Association and its officers, officials, agents, and employees for losses arising from work performed by or on behalf of the Contractor.

15. *Automobile Liability*

Bodily Injury and Property Damage for any owned, hired, and/or non-owned vehicles used in the performance of this Agreement.

Combined Single Limit (CSL) $ 1,000,000

15. The policy shall be endorsed to include the following additional insured language: *"Arizona Community Action Association shall be named as additional insured with respect to liability arising out of the activities performed by or on behalf of the Contractor, involving automobiles owned, leased, hired or borrowed by the Contractor".*

15. *Worker's Compensation and Employers' Liability*

The policy will cover all obligations imposed by federal, state and local statutes with jurisdiction over Contractor's employees.

15. The policy shall contain a waiver of subrogation against Arizona Community Action Association and its officers, officials, agents, and employees for losses arising from work performed by or on behalf of the Contractor.

3.8.4 Wherever additional insured status is required, such additional insured shall be covered to the full limits of liability purchased by the Contractor, even if those limits of liability are in excess of those required by this Agreement. The Contractor's insurance coverage shall be primary insurance with respect to all other available sources. Coverage provided by the Contractor shall not be limited to the liability assumed under the indemnification provisions of this Agreement.

3.8.5 Each insurance policy required by the insurance provisions of this Agreement shall provide the required coverage and shall not be suspended, voided, canceled, or reduced in coverage or in limits except after thirty (30) days prior written notice has been given to ACAA.

3.8.6 Insurance is to be placed with duly licensed or approved non-admitted insurers in the state of Arizona with an "A.M. Best" rating of not less than A- VII. ACAA makes no representation or warranty that the above-required minimum insurer rating is sufficient to protect Contractor from potential insurer insolvency. If Contractor utilizes the Social Service Contractors Indemnity Pool (SSCIP) or other approved insurance pool for insurance coverage, SSCIP or the other approved insurance pool is exempt from the A.M. Best's rating requirements listed in this Agreement. If Contractor chooses to use SSCIP or another approved insurance pool as its insurance provider, Contractor would be considered in full compliance with insurance requirements relating to the A.M. Best rating requirements.

3.8.7 Contractor shall furnish ACAA with certificates of insurance (ACORD form or equivalent approved by ACAA) as required by this Agreement. The certificates for each insurance policy are to be signed by a person authorized by that insurer to bind coverage on its behalf. All certificates and endorsements are to be received and approved by ACAA before services commence. Each insurance policy required by this Agreement must be in effect at or prior to commencement of services under this Agreement and remain in effect for the duration of the term of this Agreement. Failure to maintain the insurance policies as required by this Agreement, or to provide evidence of renewal, is a material breach of contract.

3.8.8 Contractor's certificate(s) shall include all subcontractors as insureds under its policies or Contractor shall furnish to ACAA separate certificates and endorsements for each subcontractor. All coverages for subcontractors shall be subject to the minimum requirements identified above.

4. Compliance with Terms of Funding. Contractor acknowledges that Contractor's services will be part of the programs funded by the Funding Sources listed in ***Section 1*** pursuant to the Program Documents. Contractor agrees it will be bound by and will comply with all terms and conditions of the Program Documents, including without limitation all indemnification and insurance obligations. The "Program Documents" consist of the documents attached hereto as ***Exhibits A*** through ***H*** and any written policies and procedures that ACAA may send to Contractor from time to time, all of which are incorporated herein by this reference. The Program Documents require ACAA to submit certain periodic reports to the Fund Sources. Contractor agrees to cooperate with ACAA in preparing these reports. In addition, Contractor shall submit monthly reports to ACAA on forms prescribed by ACAA and comply with all other reporting obligations under the Program Documents. Such invoices and reports shall be submitted no later than fifteen (15) days after the end of each month.

4.1 Grant Management System Database (GMS). Contractor will ensure, all fund sources will be directly inputted into the GMS Database system, CAP60, or transferred electronically.

5. Confidential Information.

5.1 Contractor's Obligation of Confidentiality. Contractor recognizes that as a result of this Agreement and Contractor's performance of services hereunder Contractor will have access to confidential information ("Confidential Information"). Contractor will keep the Confidential Information it receives confidential at all times and will not, without the prior written consent of ACAA, disclose Confidential Information to any person other than its legal counsel and other parties authorized by ACAA in writing prior to the disclosure of the Confidential Information (such legal counsel and other authorized parties will hereinafter be collectively referred to herein as the "Representatives") who need to know the Confidential Information. Contractor agrees to inform its Representatives of the confidential nature of the Confidential Information and to obtain their agreement to be bound by the terms of this ***Section 5*** for the benefit of ACAA. Contractor agrees to treat and use Confidential Information in a manner that is consistent with protecting such

information. Contractor agrees that it will be responsible for any unauthorized use or disclosure of Confidential Information or other non-compliance with this Agreement by any Representative or other agents, or by any other person who obtains access to Confidential Information from, or due to the fault of, Contractor. Any such non-compliance will constitute a breach of this Agreement by Contractor.

5.2 Definition of Confidential Information. Confidential Information includes without limitation any information in whatever form, whether documents, computer disks, computer drives, computer chips, audio tapes or video tapes, that are marked with the legend "confidential" or other notice of similar meaning or are otherwise treated as confidential by ACAA. Whether or not indicated to be confidential, the following information shall be deemed to constitute Confidential Information: all data collected from applicants for assistance and program participants including without limitation names, addresses, and any other information of a personal or intimate nature, and all trade secrets, proprietary data, financial information, business information and other proprietary information disclosed by ACAA to Contractor, and further including without limitation any copies, summaries, indexes or abstracts of Confidential Information and any information or materials derived from Confidential Information. In addition to the foregoing, any information that is otherwise protected by law as confidential without regard to this Agreement shall constitute Confidential Information. The term "Confidential Information" as used herein does not include any information which (a) is already known to the public prior to disclosure to Contractor; (b) is subsequently made known to the public without any violation of this Agreement; or (c) is rightfully received by Contractor from a third party without similar restriction and without breach of this Agreement. Notwithstanding the foregoing, Contractor will not be deemed in violation of this Agreement in the event Contractor discloses Confidential Information in response to a duly issued court order or subpoena if Contractor provides prompt advance notice thereof to ACAA or if Contractor discloses data regarding applicants for assistance and program participants to the extent required by Contractor's reporting obligations under other agreements pursuant to which Contractor receives funding.

6. **Audit and Inspection**. ACAA will have the right to audit and inspect Contractor's work to verify compliance with this Agreement. Contractor agrees to provide ACAA and its Fund Sources with access, upon reasonable advance notice and during normal business hours, to all of Contractor's books and records that relate to this Agreement. Contractor will maintain copies of all books and records that relate to this Agreement for at least 3 years after the expiration of this Agreement.

7. **Notices.** All notices given in connection with this Agreement shall be in writing and sent by: (i) hand delivery (ii) nationally recognized courier, (iii) facsimile, (iv) United States certified mail with return receipt requested, postage paid, or (v) e-mail. All notices shall be deemed given and received when (a) if given by facsimile, upon confirmed transmission during normal business hours (before 5:00 p.m. Arizona time), if confirmed transmission is after normal business hours it will be deemed given and received the next business day, (b) if hand delivered, when delivered (as confirmed by receipt executed by the recipient or delivery confirmation executed by the courier), (c) if given by a nationally recognized courier, on the day the notice is actually delivered (as confirmed by receipt executed by the recipient or delivery confirmation by the courier), (d) if given by certified mail, return receipt requested, postage paid, when actually delivered to the addresses specified herein as evidenced by return receipt or refusal or failure to accept delivery. All notices will be given at the address or by use of the facsimile number or e-mail address specified for a party on the signature page hereof. A party may change its mailing address, e-mail address and/or facsimile number for notice by giving notice to the other parties in accordance with this Section.

8. **Limitation of Liability**. Contractor acknowledges that all funds to be provided pursuant to this Agreement will be provided by the Fund Sources, and Contractor agrees to look solely to funds actually paid by the Fund Sources for Contractor invoices approved by the Fund Sources for all compensation and reimbursement hereunder. ACAA's obligations under this Agreement are subject to the Fund Sources actually providing the funds (either to ACAA or directly to Contractor) pursuant to the Program Documents. ACAA intends to allocate the funds from each Fund Source to multiple contractors. If one or more Fund Sources reduces their funding to ACAA, then ACAA reserves the

right to reduce Contractor's funding under this Agreement and to allocate the reduced funding among Contractor and other contractors as determined by ACAA in its sole discretion.

9. **Assignment; Subcontractors**. Contractor may not assign Contractor's rights or obligations under this Agreement without ACAA's prior written consent, which consent ACAA may withhold in its sole discretion. Contractor may not use a subcontractor to perform any of Contractor's obligations under this Agreement without ACAA's prior written consent, which consent ACAA will not unreasonably withhold ACAA's consent to an assignment or subcontractor will not release Contractor from any obligations hereunder.

10. **Choice of Law and Forum**. This Agreement has been entered into in Maricopa County, Arizona and its application and interpretation shall be governed exclusively by its terms and by the laws of the State of Arizona without regard to its choice of law rules. The exclusive and proper venue for any dispute arising out of this Agreement will be the state and federal courts located in Maricopa County Arizona.

11. **Integration; Modification; Waiver**. This Agreement reflects the entire agreement of the parties relating to the subject matter hereof. All recitals and exhibits to this Agreement are incorporated herein by this reference. No provision of this Agreement shall be deemed waived, amended, or modified by any party unless both parties sign a written amendment or the party against whom the waiver is asserted signs a written waiver.

12. **Legal Arizona Workers Act Compliance.** Firm hereby warrants that it will at all times during the term of this Contract comply with all federal immigration laws applicable to Firm's employment of its employees, and with the requirements of A.R.S. § 23-214 (A) (together the "State and Federal Immigration Laws"). Firm shall further ensure that each subcontractor who performs any work for Firm under this contract likewise complies with the State and Federal Immigration Laws.

County shall have the right at any time to inspect the books and records of Firm and any subcontractor in order to verify such party's compliance with the State and Federal Immigration Laws.

Any breach of Firm's or any subcontractor's warranty of compliance with the State and Federal Immigration Laws, or of any other provision of this section, shall be deemed to be a material breach of this Contract subjecting Firm to penalties up to and including suspension or termination of this Contract. If the breach is by a subcontractor, and the subcontract is suspended or terminated as a result, Firm shall be required to take such steps as may be necessary to either self-perform the services that would have been provided under the subcontract or retain a replacement subcontractor, (subject to County approval if MWBE preferences apply) as soon as possible so as not to delay project completion.

Firm shall advise each subcontractor of County's rights, and the subcontractor's obligations, under this Article by including a provision in each subcontract substantially in the following form: "Subcontractor hereby warrants that it will at all times during the term of this contract comply with all federal immigration laws applicable to Subcontractor's employees, and with the requirements of A.R.S. § 23-214 (A). Subcontractor further agrees that County may inspect the Subcontractor's books and records to insure that Subcontractor is in compliance with these requirements. Any breach of this paragraph by Subcontractor will be deemed to be a material breach of this contract subjecting Subcontractor to penalties up to and including suspension or termination of this contract."

Any additional costs attributable directly or indirectly to remedial action under this Article shall be the responsibility of Firm. In the event that remedial action under this Article results in delay to one or more tasks on the critical path of Firm's approved construction or critical milestones schedule, such period of delay shall be deemed excusable delay for which Firm shall be entitled to an extension of time, but not costs.

13. **Anti-Terrorism Warranty.** Pursuant to **A.R.S. §35-397** the Firm certifies that it does not have scrutinized business operations in Iran or Sudan and that they are in compliance with the Export Administration Act and not on the Excluded Parties List.

14. **Cancellation.** This agreement is subject to cancellation pursuant to **A.R.S. § 38-511.**

15. **Counterparts; Facsimile.** This Agreement may be executed in counterparts and delivered by facsimile.

[Signature Page Follows]

IN WITNESS WHEREOF, the undersigned have executed this Agreement, effective as of the Effective Date.

CONTRACTOR
Gila County Board of Supervisors

Tommie C. Martin, Chairman, Gila County

Date: 6/5/12

Approved as to Form:

Bryan B. Chambers, Chief Deputy County Attorney

Date: 6-5-2012

Address:
5515 S. Apache Avenue, Suite 200
Globe, Arizona 85501

Arizona Community Action Association,
an Arizona nonprofit corporation

By _____
Name: Cynthia Zwick
Title: Executive Director

Date: May 1, 2012

Address:
2700 North 3rd Street, Suite 3040
Phoenix, Arizona 85004
Fax No.: 602-604-0644
E-mail: czwick@azcaa.org

Arizona Community Action Association

List of Attached Exhibits:

Exhibit A	Utility Repair, Replacement and Deposit Policy Manual Effective July 1, 2012 – June 30, 2013
Exhibit B	Instructions for Verifying Citizenship and Non-Citizen Legal Permanent Resident (LPR) Status (Revised by DES in 8/2011)
Exhibit C	Southwest Gas (SWG) Bill Assistance Program
Exhibit D	Home Energy Assistance Fund Policy Manual July 1, 2012 – June 30, 2013
Exhibit E	APS Crisis Bill Assistance Program Summary
Exhibit F	Salt River Project Bill Assistance Program Summary
Exhibit G	Federal Poverty Income Guidelines effective July 1, 2012 – June 30, 2013
Exhibit H	Arizona Department of Economic Security/Div. of Aging and Adult Services – Monthly 60% State Median Income (SMI) to be used for program eligibility for the SRP Bill Assistance Program

Exhibit A

Home Energy
Assistance Fund
Aid. Educate. Conserve.

UTILITY REPAIR REPLACEMENT DEPOSIT (URRD)

POLICY MANUAL SFY 2013

Effective: July 1, 2012 – June 30, 2013

Table of Contents

A.	Purpose of the Program	3
B.	Types of Assistance	3
C.	Guidelines for Replacement	3
D.	Elements of Eligibility	4
E.	Income Guidelines	5
F.	Application Form	6
G.	Interview Process	6
H.	Verification, Documentation And Declaratory Statements	6
I.	Case File	7
J.	Crisis Reason	7
K.	Persons Included in the Household	7
L.	Referrals	7
M.	Policy Changes & Clarifications	8
N.	Monitoring Process	8
O.	Cooperation	8

A. PURPOSE OF THE PROGRAM

The Utility Repair, Replacement and Deposit Program (URRD) was established by state law (A.R.S. §46-731) to provide assistance to low income individuals in crisis situations with deposits for utility services and to make needed repairs and/or replacements to **existing** utility related appliances or systems. In January 2007, A.R.S. §46-731 was revised to require abandoned deposits to be administered by a qualified fuel fund entity.

The Arizona Community Action Association (ACAA) administers this program through Community Action Agencies throughout the State. Utility Repair, Replacement and Deposit assistance may be received only once in a 12 month period and may not exceed **$2,000.00**.

B. TYPES OF ASSISTANCE

1. Deposits for Utility Services:
   Electric
   Gas
   Water
   Telephone

2. Repairs to existing utility-related appliances or systems.

3. Replacements of existing heating or cooling systems, water heaters, space heaters and telephone for owners.

NOTE: **The applicant must be the owner of the appliance or system to be repaired and/or replaced. There must be an existing utility related appliance or system.**

C. GUIDELINES FOR REPAIR/REPLACEMENT

1. Eligible Appliances

Water Heaters
Cooking Stoves
Microwaves
Furnaces
Air Conditioners
Telephone
Evaporative Coolers
Refrigerators
Washers/Dryers

Ineligible Appliances

Televisions
Radios
VCRs
Hair Dryers
Blenders
Water Softeners
Cable TV
Satellite Receivers

***Replacement of appliance(s) must have Energy Efficient Star Rating.**

Any appliance repair and/or replacement not listed on the list of eligible appliances, please contact ACAA at (602) 604-0640.

2. **Criteria for distinguishing between a repair and a replacement**

Replacement of utility related appliance shall be limited to instances when repair costs exceed replacement costs, **or** when an appliance is found to be inoperable with repairs. **Replacement will only occur when a crisis has been documented.**

3. **Ownership and Inspection**

Ownership of the appliance or utility system can be determined by:

- Client provides a receipt of purchase, or
- Client signs statement of ownership

Inspection of the needed repair and/or replacement may be completed by a qualified individual of the agency.

4. **Payments**

The client must indicate in writing that repairs or replacements have been made prior to payment to vendor. Contractors shall have procedures in place to ensure this occurs.

Payment for a repair or replacement should be made after the completion of work, inspection and receipt of appropriate documentation, such as an invoice.

D. ELEMENTS OF ELIGIBILITY - URRD

An Eligible Applicant

1. **Must be a US citizen or qualified legal resident. The agency must verify the citizenship and/or immigration status of all applicants.**

Citizenship Verification Requirements

Arizona Revised Statute, Section 46-140.01 requires that local governments verify the identity and citizenship and/or immigration status of persons applying to receive certain public benefits including the Utility Repair, Replacement and Deposit Program. **Please refer to attached exhibit in your contract, Verifying Citizenship and Non-Citizenship Legal Permanent Resident (LPR) Status, which is a list of federally accepted documents you may use to verify applicant citizenship.**

E. INCOME GUIDELINES

A household's total gross **countable income** shall mirror the income documentation guidelines of the LIHEAP program in the state of Arizona.

2012-13 FEDERAL POVERTY INCOME GUIDELINES

MONTHLY INCOME

FAMILY SIZE	200% OF POVERTY
1	$1,862
2	$2,522
3	$3,182
4	$3,842
5	$4,502
6	$5,162
7	$5,822
8	$6,482
9	$7,790
10	$8,450
For Each Additional Household Member Add:	$660

Figures derived from information dated Thursday, January 26, 2012 of the Federal Register, U.S. Department of Health and Human Services, and Office of the Secretary.

NOTE: Income limits are published annually by the Department of Health and Human Services in the Federal Register. The Poverty Guideline Chart is updated prior to July 1, of each state fiscal year.

F. APPLICATION FORM

The Agency will utilize current intake process and resources which may include but are not limited to the EN005 and the Home Energy Assistance Fund Grants Management System.

The original copy of the application will be kept with the client's file included with the supporting documentation. The client will be provided with record of application and receipt of assistance.

Agencies administering the program will complete applications for benefits at sites that are geographically accessible to all households in the areas to be served.

Agencies will provide low-income individuals who are physically infirm the means to submit an application without leaving their residences.

1. ENOO5 Application
2. Proof of ownership of appliance or system, (receipt or client statement is acceptable).
3. Documentation on EN005 application and verification of crisis reason in client file.

G. INTERVIEW PROCESS

Agencies are responsible for the application process. This includes but is not limited to:

1. Client Interview
2. Application Completion
3. Documentation
4. Verification
5. Checking for prior URRD assistance within the service area
6. Eligibility Determination.

H. VERIFICATION, DOCUMENTATION AND DECLARATORY STATEMENTS

Each decision of eligibility or ineligibility for URRD benefits must be supported by facts in the applicant's case file. Verification, documentation, and declaratory statements are crucial in completing an application. It allows the worker to collect and support all pertinent information and statements regarding the eligibility of the application.

I. CASE FILE

URRD applications are not submitted to ACAA - **however** the applicant's case file must be maintained at the community agency. The case file must contain the following:

1. A copy of the application for benefits.
2. A copy of income verification for the last 30 days from the date of application.
3. Copies of all household members' identification, social security cards, birth certificates or documentation.
4. Proof of ownership of appliance or system, (receipt or client statement is acceptable).
5. Crisis reason must be documented on application **and** documentation supporting the crisis reason, as outlined in section **J. Household must meet one of the crisis reasons to be eligible.**
6. **Copies of all documentation used to verify applicant's citizenship or immigration status. Permanent Resident Cards must be photo copied front and back.**
7. **Client statement indicating in writing that** repairs or replacements have been made and/or completed.

J. CRISIS REASON

A crisis is defined as a situation in which the household has or is experiencing:

- A loss or reduction of income or public assistance benefits or delay in receiving public assistance benefits;
- An unexpected and unplanned expense that caused lack of resources;
- A condition that endangers the health and safety of the household.

K. PERSONS INCLUDED IN THE HOUSEHOLD

A household is defined as an individual/group of individuals who occupy a single-family dwelling for whom energy is purchased in common. All persons living in the household must be included when completing the application:

Boarders are one or more persons living in the same house paying rent to the owner of the home who also lives in the house or one who lives and pays rent in a commercial boarding house. Income of the owner of the home or other boarders is not counted.

Note: Roommates are defined as one or more persons living in the same house paying rent to the landlord outside of the home. This should not be confused with boarders **as all income for roommates is counted**.

L. REFERRALS

When the emergent need includes assistance that cannot be provided through URRD the provider or contracted agencies must provide information about other resources and/or referral to other agencies. Documentation indicating the name of the agencies where the client was referred must be included in the client's case file.

M. POLICY CHANGES & CLARIFICATIONS

Revisions to any policies and procedures will be reviewed and approved by the Program Manager. All revisions will be sent to intake agencies to update their manuals. It will be the workers' responsibility to update their copy of the URRD Manual as revisions are received. Issues regarding policy and/or procedures must be submitted in writing.

N. MONITORING PROCESS

ACAA will be responsible for ensuring that URRD policy and procedures are being followed. ACAA will conduct application and case file reviews during monitoring visits. Any ineligible payments as a result of the monitoring process will be reimbursed to ACAA.

O. COOPERATION

Applicants must cooperate in all aspects of the application process. Applicants must complete and sign an application which includes providing requested information or verification. If the applicant refuses, the application will be denied. The CAP agency will describe the lack of cooperation in the comment section of the application.

Exhibit B

INSTRUCTIONS FOR VERIFYING CITIZENSHIP AND NON-CITIZEN LEGAL PERMANENT RESIDENT (LPR) STATUS

U.S. CITIZENSHIP

U.S. citizenship is established at birth when an applicant is born in the U.S., its territories, or possessions.

U.S. territories or possessions include any of the following:

- American Samoa
- Guam - on or after January 17, 1917
- Northern Mariana Islands – on or after November 4, 1986
- Panama Canal Zone - on or after February 26, 1904
- Puerto Rico - on or after July 1, 2010
- Swain Islands
- U.S. Virgin Islands – on or after January 17, 1917

100. VERIFICATION OF U.S. CITIZENSHIP

TO BE POTENTIALLY ELIGIBLE APPLICANTS WHO DECLARE U.S. CITIZENSHIP OR LEGAL RESIDENT STATUS MUST PROVIDE DOCUMENTATION FOR VERIFYING, WITH THE FOLLOWING EXCEPTIONS:

The following participants are exempt if they are receiving the following services:

- Currently receiving Social Security Disability (SSD)...
- Currently receiving Supplemental Security Income (SSI). This includes participants who move here from another state and are in the process of transferring their SSI benefits to Arizona.
- Currently receiving Medicare (g).
- Eligible in the Deemed Newborn MA category.
- Children in Foster Care assisted under title IV-B of the Social Security Act.
- Children who are recipients of Foster Care maintenance or adoption assistance payments under title IV-e.
- Children receiving adoptions subsidies.

NOTE: The participants receiving the service must provide an award letter or documentation as proof of receiving the service. Once the participant is no longer receiving the benefits that meet the exemption criteria they must then provide the proper and approved documentation as described in the section below.

.01 APPROVED DOCUMENTATION

Citizenship may be verified using ANY of the documents indicated under sections A, B, C or D immediately below:

A. PRIMARY - VERIFICATION DOCUMENTS

1. A birth certificate showing birth in the U.S., its territories or possessions. Birth Certificates issued from Puerto Rico must be issued on or after July 01, 2010. (See policy clarification #010-01).
2. Certificate of Birth issued by the Department of State (FS-545 or DPS-1350).
3. U.S. Passport current or expired, except limited passports which are issued for periods of less than 5 years.
4. U.S. Passport Card issued by the United States Citizenship and Immigration Services (USCIS).
5. Certificate of Naturalization (N-550 or N-570).
6. Certificate of U.S. Citizenship (N-560 or N-561).
7. Report of Birth Abroad of a U.S. Citizen (FS-240) issued by the U.S. State Department.
8. U.S. Consular officer's statement.
9. A United States Citizen Identification Card (I-197).
10. Northern Mariana Identification Card (I-873).
11. A tribal enrollment card or Certificate of Indian Blood issued by a federally recognized Indian Tribe that shows that the person is enrolled or affiliated with that tribe.
12. American Indian Card (I-872) issued by USCIS with the classification code KIC.

B. SECONDARY - VERIFICATION DOCUMENTS

1. An identification card for use of Resident Citizen (I-179).
2. U.S. Census record that shows the applicant's name and a U.S. place of birth and the date of birth or age of the participant.
3. Religious record created within three months after birth, showing the participant's date of birth, OR the participant's age when the record was made. It must indicate a place of birth in the U.S., Territories, or Possessions. (See U.S. Citizenship on page 1)
4. Proof of employment as a U.S. government civil servant before June 1, 1976
5. Early school records, showing the date of admission, the child's date and place of birth and the names and places of birth of the parents.
6. Adoption finalization papers showing the child's name and place of birth in the U.S., its territories or possessions (See U.S. Citizenship on page 1). (When adoption is not finalized and the State will not release a birth certificate prior to final adoption, a statement from a state approved adoption agency containing the child's name and place of birth may be used. The source of information must be an original birth certificate and must be indicated in the statement).

C. When none of the primary or secondary documents are available, accept any other document that establishes a U.S. place of birth or in some way indicates U.S. Citizenship. These include the following:

1. Certificates of Live Birth signed by a hospital official and parent

2. Medical records created at least five years before applying for services that list a U.S. place of birth. For children under age 16 the document must be created near the time of birth OR five years prior to the application date. These include: hospital wrist bands, crib cards, or yellow copies of hospital birth certificates indicating birth in the U.S., its territories or possessions (See U.S. Citizenship on page 1).
3. American Indian Census Records
4. Verification from the U.S. Citizenship and Immigration Services (USCIS). **This documentation CANNOT be expired.**
5. Verification from the Social Security Administration, e.g. award letter.
6. Verification sent directly to the agency from a local, state or federal bureau of vital records office
7. Legal records showing the applicant's name and place of birth in the U.S., its territories or possessions.
8. Department of Homeland Security (DHS), Verification Information System (VIS) response that validates U.S. Citizenship.
9. Online data match screen print with the Arizona Department of Vital Records through the AHCCCS Citizenship Verification System
10. Military papers: When verifying military service criteria, the following apply:

    - An honorably discharged veteran of the Armed Forces of the U.S. must present an original or notarized copy of the veteran's discharge papers.
    - Verify active duty status with an original or notarized copy of the applicant's current orders or a military ID card (DD form 2(active)).
    - A spouse or unwed dependent child of a veteran or active duty noncitizen must provide a document to verify relationship along with military verification requirements.
    - A stepchild living with the stepparent must provide documents to verify relationship along with military verification requirements.

11. Marriage certificate showing marriage to a U.S. male citizen before September 22, 1922
12. Life, health or other insurance record, created at least five years before the application date. Record must indicate a place of birth in the U.S.
13. State census records that show the participant's name, a U.S. place of birth, and the date of birth or age of the participant.
14. Tribal census records for the Navajo or Seneca tribes. The records must be created at least five years before the application and list a U.S. place of birth.
15. An official notification of birth registration from a U.S. State's Department of Vital Statistics.
16. An amended U.S. public birth record that is amended more than five years from the applicant's birth.
17. A statement signed by the physician or midwife who was in attendance at the time of birth
18. The roll of Alaska Natives from the Bureau of Indian Affairs.
19. A **current** decision letter from the ADES/Family Assistance Administration that demonstrates eligibility for the Food Stamp or Cash Assistance

Programs. The award letter must list the Low Income Home Energy Assistance Program (LIHEAP) applicant as an eligible member of the household and for Short Term Crisis Services (STCS) Program the qualifying child must be listed as an eligible member of the household.

D. When the applicant cannot obtain the Primary or Secondary forms of verification they may provide an Affidavit Attesting Citizenship. An Affidavit Attesting Citizenship must meet all of the following requirements:

1. Be completed by a U.S. Citizen who is knowledgeable about the participant's circumstances.
2. Be signed by a U.S. Citizen that is not a member of the household.
3. Be approved by the Case Manager Supervisor.
4. Document the reason for using the affidavit form.

.02 ACCEPTABLE COPIES

Only original or un-tampered copies of required documents are acceptable for verifying citizenship.

Determining Non-citizen Status
To determine non-citizen status, complete the following:

Ask the applicant for their USCIS documentation. When the applicant states they do not have documentation, do not question the participant further regarding their status.

When the document is provided, compare the document to the documents listed on pages 5 through 12. If the document is one of the qualified non-citizen documents, the non-citizen has a qualified status.

A nonqualified non-citizen, who is residing in the United States without the knowledge or permission of USCIS, may do one of the following:

- Voluntarily self declare that they are residing in the U.S. illegally or
- Provide Immigrations and Customs Enforcement (ICE) documents verifying violation of USCIS law.

When either of these occurs, follow your agency's process for reporting discovered violations to the Federal Department of Immigration and Customs Enforcement (ICE).

200 VERIFICATION OF QUALIFIED NON-CITIZENS

.01 QUALIFIED NON-CITIZEN CATEGORIES

Applicants, who state they are Non-Citizen Legal Residents, must meet at least one of the categories set forth immediately below:

A. LAWFUL PERMANENT RESIDENT (LPR)

A lawful permanent resident (LPR) is admitted into the U.S. for permanent residence under the Immigration and Nationality Act (INA). This Non-Citizen Legal Resident is potentially eligible for services when they meet any of the following:

1) They have been continuously lawfully residing in the U.S. and their date of entry is five years in the past or more
2) They entered the U.S. as a Non-Citizen Legal Resident eligible for benefits in another qualified category prior to becoming an LPR
3) They have a military connection
4) They are American Indians born in Canada who possess at least 50 per centum of American Indian Blood. These Non-Citizen Legal Residents are recognized as LPR.

These applicants normally have one of the following USCIS documents **(NOT ACCEPTABLE IF DOCUMENTS ARE EXPIRED):**

1. I-551- Resident Alien Card (Eligible for Benefits)

2. I-151- Alien Registration Receipt Card (Eligible for Benefits)

3. I-194- or unexpired passport with the words: Processed for I-551

Temporary Evidence of Lawful Permanent Residence. Valid Until (Date). With the following Stamp/Annotations of Law

a) Adjustment Admission Stamp – Eligible when any of the following sections of law are indicated: 203(a)(7); 207;208;212(d)(5); 243(h)(with a Prucol determination);

b) Non-Specific Admission Stamp – Eligible when the form is noted with an I-551 eligible status code

c) Parole Admission Stamp – Eligible when the period of parole is for at least one year as verified on the stamp

d) Replacement Admission Stamp – Eligible when the stamp displays an I-551 eligible Status Code

e) Temporary I-551 Admission Stamp – Eligible when the key phrase reads one of the following: "Admission for Permanent Residence at
   a. D" or "Processed for I-551 Temporary evidence of admission for Permanent Residence" and displays one of the following Status Codes: AM1; -2; -3; -6; -7; -8;

B. **ASYLEE** - An asylee is an individual who has been granted protection and immunity from extradition by USCIS. These applicants normally have one of the following USCIS documents **(NOT ACCEPTABLE IF DOCUMENTS ARE EXPIRED)**:
   1. I-94 with one of the following:
      A stamp showing grant of asylum under Section 208 of the INA to include:
      a. AS1 - Eligible for benefits
      b. AS2 - Eligible for benefits
      c. AS3V92 - Eligible for benefits

C. **BATTERED NON-CITIZEN**

A battered Non-citizen is an individual who has suffered abuse or extreme cruelty while living in the U.S. Battered nonqualified noncitizens may become qualified Non-Citizens when they have suffered abuse from any of the following:

- a parent,
- a spouse
- a relative of the parent or spouse who resides in the same home as the battered noncitizen.

- In order for the Non-Citizen to be eligible under this category, they must meet **ALL** of the following:

1. Possess appropriate USCIS status
2. Abuse occurred in the U.S.
3. The abusive person was a U.S. Citizen or Lawful Permanent Resident (LPR).

4. The abused individual is no longer residing with the batterer

D. CUBAN OR HAITIAN ENTRANT

A Cuban or Haitian entrant is an individual who has fled to the U.S. from either Cuba or Haiti to escape oppression or persecution.

These applicants normally have the following USCIS document: **(NOT ACCEPTABLE IF DOCUMENTS ARE EXPIRED)**

1. I-94 with the words: CUBAN/HAITIAN ENTRANT UNDER 212(D) OF THE INA (Eligible for Benefits)

NOTE: Haitian nationals who resided in the United States on January 12, 2010, were granted Temporary Protected Status (TPS), due to the earthquake in their country. TPS does not satisfy qualified non-citizenship eligibility criteria. Therefore they are not eligible for benefits unless they meet other qualifying criteria.

E. NON-CITIZEN WHOSE DEPORTATION IS WITHHELD

A Non-Citizen Legal Resident whose deportation is withheld is a Non-Citizen whose continued presence in the U.S. is required by the U.S. government. A Non-Citizen Legal Resident whose deportation is withheld is potentially eligible for services for a period of seven years from the date of the judge's orders.

These applicants normally have one of the following USCIS documents **(NOT ACCEPTABLE IF DOCUMENTS ARE EXPIRED)**:

I-94 – with an order from an immigration Judge showing one of the following:

- Deportation withheld under 243(h) of the INA
- Removal withheld under 241(b)(3) of the INA

F. INDEFINITE DETAINEE

Indefinite detention status pertains to Non-Citizens who have served their time for a criminal conviction and have been given formal orders to leave the U.S. Indefinite Detainee status is granted by USCIS when the Non-Citizen is allowed to indefinitely remain the U.S. because neither their home country, nor any other country will accept them.

An Indefinite Detainee applicant can be identified by an Order of Supervision (I-220B) USCIS form that should include both of the following:

- The applicant's alien registration number.
- A notation regarding U.S. exclusion, deportation, or removal.

Indefinite Detainee applicants may also have an Employment Authorization Document (I-688B) USCIS form showing 274a.12(c) (18). The agency should obtain as much of the following information as possible from the applicant:

1. Name and Date of Birth
2. Alien Registration Number
3. Social Security Number
4. Home Country
5. I-94 Card Number
6. Parent's Names
7. Driver's License Number
8. Copies of ANY immigration documents (I-220B, I-688B, etc.)

- The agency should call the Office of Refugee Resettlement (ORR) to request an Indefinite Detainee eligibility determination and inform ORR that the collected information will be faxed.
- The agency should fax the information collected from the applicant to ORR. The FAX must include the name, telephone number, and FAX number of the person requesting information.
- The agency should document all action taken and the dates made.
- The agency should not approve or disqualify the Non-Citizen Legal Resident during this period. The agency should hold the application pending detainee status confirmation from ORR.
- ORR will submit the faxed information to USCIS and will notify the person requesting the information on the applicant's status and eligibility by FAX.

G. NON-CITIZEN PAROLED INTO THE U.S.

A parolee is an individual who has been granted lawful temporary residency in the U.S. by USCIS for humanitarian reasons, or the public benefit. The parolee status must be **BOTH** of the following:

- Granted status of at least one year.
- Granted under 212(d)5(A) of the Immigration and Naturalization Act.

Parolees must also meet the continuous residency requirements to be eligible for services (See page 10).

1. I-94 - with PAROLE PURSUANT TO SECTION 212(d) (5) on the front. The form must not be expired and the expiration date must be at least one year after the issue date. Both dates are documented on the form.

H. REFUGEE OR AMERASIAN

A Refugee or Amerasian is an individual who has fled their country to escape invasion, oppression, or persecution. A Refugee or Amerasian is admitted into the U.S. under Section 207 of INA. This Non-Citizen is potentially eligible for benefits for a period of seven years from the date that their status is granted.

These applicants normally have one of the following USCIS **documents (NOT ACCEPTABLE IF DOCUMENTS ARE EXPIRED)**:

I-94 – endorsed to show entry as a refugee under Section 207 of the INA or entry as an Amerasian OR noted with one of the following Status Codes: NP2 - 7; P2 –6, -7, -71; RE7 –8; Z2; (Eligible for Benefits)

I. VICTIM OF SEVERE HUMAN TRAFFICKING

A victim of severe human trafficking is admitted onto the U.S. under the Trafficking Victims Protection Act (TVPA) of 2000. This Non-Citizen Legal Resident is potentially eligible for services for a period of seven years from the date that their status is granted. These applicants normally have one of the following USCIS documents **(NOT ACCEPTABLE IF DOCUMENTS ARE EXPIRED)**:

1. I-797, Notice of Action annotated with one of the following T Visa or Derivative T Visa class of admission codes: T-1, T-2, T-3, T-4, and T-5.

J. SPECIAL IMMIGRANT VISA HOLDER

Special Immigrant Visa (SIV) holders are individuals who enter the U.S. under a special visa issued by USCIS to Iraqi and Afghani citizens. These visas entitle the noncitizen to the same benefits and services as refugees.

K. AMERICAN INDIANS BORN OUTSIDE OF THE UNITED STATES

An American Indian born in Canada and not enrolled in a federally recognized tribe may be considered as a Lawful Permanent Resident (LPR), they must meet **BOTH** of the following:

- Possess at least 50% American Indian blood
- Established residency in the U.S.

These noncitizens usually have USCIS form I-181.

B. NON-SPONSORED LAWFUL PERMANENT RESIDENT

A non-sponsored Lawful Permanent Resident (LPR) is a noncitizen given permission to permanently live and work in the U.S. and has not been sponsored through USCIS by an individual or an organization. A non-sponsored LPR must meet at least **ONE** of the additional requirements listed below:

01. Five years of Lawful Residency:
To meet the five year requirement, a Lawful Permanent Resident (LPR) must have been continuously living in the U.S. as an LPR for five years or more.

02. Prior Qualified Status
To meet the qualified status, a Lawful Permanent Resident (LPR) must have entered the U.S. in a temporary qualified status.

03. Military Connection
Non-Citizens who meet both of the following criteria are potentially eligible for benefits, regardless of their date of entry:

a. They are a qualified Non-Citizen
b. They meet one of the following military service criteria:

01. An honorably discharged veteran of the Armed Forces of the U.S. must present an original or notarized copy of the veteran's discharge papers.
02. To verify the active duty status an original or notarized copy of the applicant's current orders or a military ID card (DD form 2 (active)) may be used.
03. Only full-time Air Force, Army, Navy, Marine, or Coast Guard is eligible. Any Reserve or National Guard duty is excluded.
04. A spouse or unwed dependent child of a veteran or active duty alien must provide a document to verify relationship along with military verification requirements listed below:
    - Is legally married to the veteran or person on active duty
    - Is legally separated form the veteran or person on active duty
    - Is a widowed spouse of the veteran or person on active duty and has not remarried

NOTE: The applicant remains eligible regardless of whether they are living together or apart; the veteran or active duty person can be a U.S. Citizen or a Non-Citizen Legal Resident.

04. Continuous Residency
These noncitizens must provide documentation that indicates they have been residing in the U.S. continuously since August 22, 1996.

There must be no absences longer than 30 continuous days. The total of all absences must be fewer than 90 days from the time the noncitizen entered the U.S. up to the date their status (LPR, parolee, or battered) status was approved.

When it has been determined there is potential eligibility for the qualified noncitizen, the noncitizen must provide **BOTH** of the following:

1. A written statement. The statement must include both of the following:

   A. The date the noncitizen arrived in the U.S.
   B. All absences from the U.S. from the arrival date until the date the LPR, parolee, or battered noncitizen status was approved.

2. Documentation to support the statement of the qualified noncitizen that they reside in the U.S. and have continuously resided in the U.S. since PRIOR to August 22, 1996. Several documents may be required to support the presence of the noncitizen in the U.S. The documentation may include, but are not limited to, the following:
   * Driver's license
   * Motor vehicle title(s) that lists the noncitizen
   * Rent or lease receipts or agreements that list the noncitizen
   * Mortgage records
   * Church records
   * School records for children that list the noncitizen
   * Income tax returns
   * Medical records
   * Statement from doctors indicating time frames the noncitizen as treated
   * Statement from clergy
   * Attorney records
   * USCIS records
   * Employment records

300. NON-CITIZEN ALIEN IDENTIFICATION CARDS

This section identifies alien ID cards that applicants may provide to determine whether they meet one of the qualified non-citizen requirements to receive benefits. **(NOT ACCEPTABLE IF DOCUMENTS ARE EXPIRED).**

.01 ALIEN IDENTIFICATION CARDS

The eligible ID cards listed in this section are as follows:

a. I-94 Arrival/Departure Record:
1-94 admission stamp used, section of law/class-code annotations; Applicant must also meet a qualified Non-Citizen Legal Resident Status criteria identified in Section II-A. NOT ELIGIBLE for benefits when the document lacks a registration number.

b. I-94 Parole Edition:
1-94 admission stamp used; section of law/class-code annotations; Applicant must also meet a qualified Non-Citizen Legal Resident Status criteria identified in Section II-A. NOT ELIGIBLE for benefits when the document lacks a registration number.

c. I-151 Alien Registration Card:
The I-151 is the original green card. Many however were printed on blue paper; several versions of this card exist. Applicants must also meet qualified Non-Citizen Legal Resident Status criteria identified in Section II-A.

d. I-551 Permanent Resident Card

e. Visa Stamps in Foreign Passports – Eligible when all of the following occur:

- The Visa is stamped "Processed for I-551, temporary Evidence of Lawful Admission for Permanent Residence".
- Neither the Visa NOR the passport have expired. The passport's expiration date is normally found on the same page as the person's photograph.

NOTE: Applicants, who have expired, lost or otherwise cannot locate their immigration documents from USCIS are responsible for contacting USCIS for replacement documents.

NOTE: Qualified Non-Citizen Legal Residents may have documents described as eligible; Case Managers must examine documents to establish their expiration date and cannot accept expired documents.

400 AFFIDAVIT THAT DOCUMENT(S) IS/ARE TRUE

.01 An eligible applicant must execute a sworn affidavit **(see Exhibit IV)** stating that the documentation provided as listed on this document during the verification process is/are true.

i. Contractors who determine eligibility for these programs will be required to ensure that a sworn affidavit is obtained in a way that does not delay the eligibility determination process, or add cost to the process for the applicant.

ii. Eligible applicants are exempt from providing an affidavit only if they are 60 years of age or older, if they are Tribal Members, or if they are disabled or have an incapacity of the body or mind which makes them unable to supply such affirmation

iii. Contractors will establish their own process for reporting discovered violations to the Federal Department of Immigration and Customs Enforcement (ICE) and are advised to consult with legal counsel or ICE for further guidance.

400. NON-CITIZENS - INELIGIBLE CARDS

Consider the following Non-Citizens as Non-Qualified. Documents include, but are not limited to the following:

1. Any alien ID cards that are expired.
2. 1-181a – Memorandum of creation of record of lawful permanent residence
3. I-184-Crewman Landing Permit
4. I-185-Nonresident Alien Canadian Border Crossing Card
5. I-186 – Nonresident Mexican Border Crossing Card
6. I-444-Mexican Border Visitor Permit
7. I-586-Nonresident Alien Border Crossing Card
8. I-688A – Employment Authorization – This is the first card issued to noncitizens living in the U.S. under the Amnesty Program of the Immigration Reform and Control Act of 1986.
9. I-688 -Temporary Resident - this is the second card issued to non-citizens under the Amnesty Program of the Immigration Reform and Control Act of 1986.
10. I-688B-Employment Authorization – Noncitizens with this card may have either qualified or nonqualified status. The Provision of Law annotated on the card determines the noncitizen's status.
11. I-689 Fee Receipt
12. I-766-Employment Authorization – This card was introduced in 1997. Noncitizens with this card may have either qualified or nonqualified status. The Provision of Law annotated on the card determines the noncitizen's status.
13. DSP150 Border Crossing Card – This card was introduced in 1998.
14. Student Visa

Arizona Community Action Association

Exhibit C

SOUTHWEST GAS
smarter > greener > better

Southwest Gas Low Income Bill Assistance Guidelines
July 1, 2012 – June 30, 2013

Scope of work:
The Southwest Gas Bill Assistance funds will be used to pay Southwest Gas bills (including deposits) for income-qualified customers in crisis situations.

Crisis situations will include:

- Sudden loss of income
- Unexpected expense that results in an inability to pay
- At risk of endangering health by not utilizing necessary appliances such as furnace or water heater.

Customer Qualifications:

- Have the Southwest Gas account in their name or apply for assistance by named proxy
- Be facing a hardship
- Have a household income equal to or less than **150%** of the current Federal Poverty Income Guidelines (FPIG)
- Have not received assistance funds from Southwest Gas Low Income Energy Conservation Bill Assistance Program during the past 12 months.

Client Intake Processes:

- Please refer to the Home Energy Assistance Fund Policy Manual for polices on client intake.

Client Verification and Documentation:

- Please refer to the Home Energy Assistance Fund Policy Manual addendum on Verification and Documentation for guidance on client verification processes.
- Verification of citizenship not applicable for this fund source.

Grant Maximum:
$400 per household per 12 month period.

Note: Twenty-five percent (25%) of your total allocation is allowed for deposits. For example, if your agency receives $6,000 you are allowed to use only $1,500 for deposits and the rest ($4,500) on utility usage.

Exhibit D

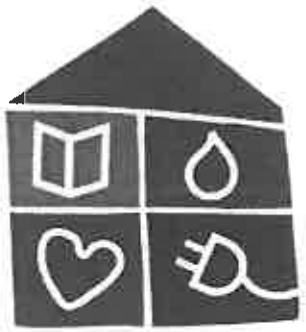

Home Energy
Assistance Fund
Aid. Educate. Conserve.

Arizona Community Action Association
Home Energy Assistance Fund
SFY-2013

Policy Manual

July 1, 2012 – June 30, 2013

Table of Contents

Mission 1
Purpose and Principles 1
Household Eligibility 1
An Eligible Applicant 1
Relatives of Applicants 1
Agency Employees or Other Employees of Sub-Contracted Entity, as Applicants 1
Services to Native Americans Living on Reservation 2
Income Eligibility 2
Utility Status 2
Definition of Crisis 2
Sincere Effort to Pay 2
Housing Status 2
Energy Burden 3
Grants Approvals 3
Grant Amounts 3
MPower® and Other Prepay Energy Sources 3
Grant Frequency 4
Assistance Available 4
Multiple Accounts 4
Grants pay for: 4
Account arrearages 4
Security Deposit 5
Current Account Charges 5
Late Fees 5
Service Establishment and Reconnect Fees 5
Decision Notice 5
Other Utility Assistance Programs 5
Payments Made to Ineligible Households 5
Fraudulent Information 5
Determining Household Income 5
Countable Income 5
Sources of countable income: 5
Excluded Income 6
Individuals Whose Income Must Be Counted 6
Individuals Whose Income Will Not Be Counted 6
Household Members 6
2009 – 2010 Federal Poverty Income Guidelines 7
Determining Household Energy Burdens 7
Verification and Documentation 8
Maintaining Client Records 8
Policy Changes and Clarifications 8
Monitoring Process 9

Cooperation 9
Confidentiality 9
Non Discrimination Policy 10
Appeals Policy 10
Glossary of Terms 11

Mission

The Home Energy Assistance Fund develops and coordinates resources through education, advocacy, financial assistance and partnerships to help Arizona families meet their basic energy needs and move toward economic stability.

Purpose and Principles

The ACAA Home Energy Assistance Fund, also referred to as the "Fund", has been established to provide assistance to Arizona households needing assistance in managing their energy burdens. The tenets of the program include:

- Crisis prevention – to guard against disconnection, to facilitate or to establish reconnection of natural gas, electric services, and other non regulated fuel sources;
- Be an adjunct to currently existing energy assistance resources;
- Be a "hand up" not a "hand out";
- Empower administering agencies with the discretion to assist families as needed.

Household Eligibility

An Eligible Applicant

The applicant must be an adult household member. The applicant must provide verification of household membership. Verification includes but is not limited to: driver's license with household address, a post office marked document, or an authorized statement from a third party such as a bank statement.

If the applicant is not a member of the household, in order to apply for assistance, s/he must show evidence of a Power of Attorney or a notarized statement, or any other acceptable document authorizing him/her to represent the household.

Relatives of Applicants

Intake workers are not permitted to complete applications for their own relatives to the first-cousin level including step and in-law relatives. Specifically parents, siblings, spouses, aunts, and uncles are to be interviewed by another intake worker, the Program Manager/Supervisor or Director. Upon request, and when possible, Home Energy Assistance Fund staff may provide application intake.

Agency Employees or Other Employees of Sub-Contracted Entity, as Applicants

Agency employees and/or other employees of the sub-contracted entity shall not be denied the right to apply for and receive services due to their employment with the sub-contracted entity.

These individuals or members of their households may apply for assistance. Application intake for an Agency employee must be conducted, eligibility determined, and authorized by the next level of supervision. Upon special request, and if available, a Home Energy Assistance Fund staff member may provide the intake of an application.

Services to Native Americans Living on Reservation

Agencies will provide Home Energy Assistance Fund bill assistance services to Native Americans living on tribal reservations. The amount of funding to be used to serve families living on reservation is to be no less than the proportion of all Native Americans living on reservation within their respective service territory. Agencies are responsible for managing the outreach and referral processes in order to serve this population.

Income Eligibility

Household income level will be limited to 200% FPIG[1]. Refer to the **Determining Household Income** section of the Policy Manual for methods in determining the household income.

Utility Status

Applicants with a delinquent account[2], a disconnect notice or who are without utility service are eligible for assistance. Intake workers have the discretion to extend special consideration for assistance to households demonstrating hardship and have a past due notice or a large outstanding balance. Applicants are not required to be the customer or record but must provide verification of the relationship between the utility services address and the applicant residential address.

Definition of Crisis

It is the intake worker's responsibility to determine the crisis reason and its relationship to the client's current need for services. The crisis reason **may** be supported with the necessary documentation and/or verification when applicable.

Crisis Reasons[3]:

1. Loss or reduction of income or public assistance benefits or delay in receiving public assistance benefits.
2. Unexpected and/or unplanned expenses that caused lack of resources.
3. A condition that endangers the health and safety of the household.

Sincere Effort to Pay

Applicants are expected to have demonstrated an effort of payment over the prior 90 days, but it is not required. There is no minimum dollar amount required to demonstrate effort of payment.

Housing Status

Assistance may be provided for individual residential utility accounts. Assistance may also be granted if utilities are included with rent if proper verification is provided[4].

---

[1] Applicants over the 200% FPIG income guideline could qualify based on demonstration of need

[2] An account that is one or more days past due and current charges are eligible

[3] Refer to the Glossary of Terms for detailed examples of crisis reasons

Energy Burden

The household Energy Burden will also be used to determine eligibility for a grant. The energy Burden is determined by dividing the household's one month utility costs by the last 30 days of income. Refer to the **Determining Energy Burden** section of the Policy Manual for a detailed process.

Grants Approvals

Grant Amounts

The total assistance possible is a maximum of $500. Payment(s) may include current and past due amounts including late charges, deposits, and reestablishment fees.

M-Power® and Other Prepay Energy Sources

The energy burden for SRP M-Power® customers and other cash-based energy resources will be the same as described in the **Determining Energy Burden** section. **A history of purchases from the vendor will be required to show purchases made in the past 30 days**. The client also may be required to present any purchase receipts that might fall between the usage statement and the time of the application. Specific to SRP M-Power® customers, it will be important to identify if the client has any debt on the account and what percentage of the purchases made have been applied to the debt and applied to the forward balance to determine an accurate energy burden.

The use of the funds, not to exceed $500, will be used to eliminate any debt on the account and then to alleviate the crisis. The intake worker may determine the amount needed to sustain the utility for the household until the next source of income or from an evaluation of the current energy burden[5]. The intake worker may also take into consideration other past usage and the weather at that time to determine the grant amount. It is important to communicate to the utility vendor what portion of the grant will be applied to the debt and what portion will be applied to the forward balance.

If the debt on the account exceeds $500, the forward balance and amount to pay off the debt can be determined by working backwards. First determine the forward balance needed to alleviate the crisis and then the remaining money available will be applied to the debt.

Example 1:

---

[4] Evidence may include a copy of the lease or a note from the landlord.

[5] Forward balance cannot not exceed 150% of the current energy burden.

MPower customer

Back balance = $150
30 day need = $100
Payback percentage required by SRP: 40%
Total grant: $250
The case log must note that $150 is earmarked for balance payoff. Otherwise, the $250 will automatically be posted with 60% going to purchase ($150) and 40% going to payoff ($100), leaving $50 in arrears.

Example 2

Back balance = $700
30 day need = $120
Payback percentage: 40%
Total grant: $500
Case log should note that $120 goes to present purchase with remaining $320 to be applied to back balance. Otherwise, the $500 will automatically be posted with 60% going to purchase ($300) and 40% going to payoff ($200).

Grant Frequency

A grant may be awarded to an eligible household one time per a 12 month period. The 12 month period is based on the date of the last approved application. An applicant that was determined ineligible may reapply at a later date.

Assistance Available

The Fund will pay for heating and cooling sources of: electric, gas, propane, oil, wood, coal, and pellets. Assistance can also be provided to renters whose utilities are included in the rent and the failure to make the rent payment threatens utility service.

Multiple Accounts

If a crisis is presented with more than one utility, the grant may be split between the account(s) in crisis[6].

Grants pay for:

Account arrearages

The grant amount cannot exceed the total amount owed on the account(s)[7].

[6] For example a gas and electric account

[7] Exceptions may apply to clients with M-Power utility accounts

Security Deposit
Security deposits will be made only in the name of the adult in the household.

Current Account Charges
Late Fees
Service Establishment and Reconnect Fees

Decision Notice

The Agency **will provide written notice to the applicant of approval and/or denial of assistance.** The written notice may be hand delivered or mailed in English and/or Spanish. The notice will provide grant amount(s) and/or reason for denial.

Other Utility Assistance Programs

When possible, the agencies are encouraged to access other sources of funding to alleviate the crisis. The Fund also intends to reach households whose income falls outside of the boundaries of more income-restricted funds such as LIHEAP. If necessary, the Fund may be combined with other funding sources to prevent the crisis.

Payments Made to Ineligible Households

If assistance has been provided to an ineligible household due to; intake worker error, no funds available when grant was promised, or the client was found ineligible after payment, the payment guarantee will be honored and the intake agency will be responsible for repaying the award from its agency funds other than Home Energy Assistance Fund monies. The Agency has the right to appeal repayment to ACAA.

Fraudulent Information

If a client has been found to be fraudulent in his/her application and the payment has not been sent to the utility, the payment will be stopped and the client appropriately informed.

Determining Household Income

Countable Income

All countable income for each household member will be considered in determining eligibility for the Fund. The gross amount of countable income prior to deductions will be counted unless otherwise specified. Income will be counted for the month that it was intended[8]. Income will be included from the 30 days prior to the date of application.

Sources of countable income:

A. Earned Income: employment, self employment[9]
B. Benefit income: SSA, SSI, TANF-CA, VA, UI, GA,

[8] A SSI check received on May 30 that is intended for the month of April will be counted as income in April.

[9] Net income will be counted (Gross income less business related expenses)

C. Pensions
D. Worker's Compensation
E. Child Support
F. Work Study
G. Other Unearned Income: rental income, and endowments or legal settlements.
H. Indian Gaming Commissions

Excluded Income

A. Food Stamps
B. Medicare
C. WIC
D. AmeriCorps Stipend
E. Earned income of a child that is 16 or 17 years of age and is a full time student
F. Earned income of a child under 16 years of age
G. Cash gifts
H. Insurance Payments
I. IDA Accounts

Individuals Whose Income Must Be Counted

Any income of a household member age 18 and older will be counted, including ineligible household members. Income for all persons ages 16 and 17, **who do not attend school full time,** will be counted.

Individuals Whose Income Will Not Be Counted

A. Income for persons ages 16 and 17 who attend school full time is not counted.
B. In cases of domestic violence, the income and resources of the abuser are not counted as long as the client does not have access to his/her income and resources, or the abuser's income and resources.

Household Members

Each person living in the home is considered a household member. Income and eligibility will be determined based on the entire household. Exceptions to household members are "boarders"[10]. Roommates' income is treated as one household entity[11]. Refer to the Glossary for detail explanations of 'boarders' and 'roommates'.

[10] Boarders are one or more persons living in the same house paying rent to the owner of the home who also lives in the same house. Income of the owner of the home and the boarder is not treated as one household. Boarders cannot be related by blood or law.

[11] Roommates are one or more persons living in the same house paying rent to the landlord outside of the home. Income for each roommate is included as the household income as one entity.

2012- 2013 Federal Poverty Income Guidelines

Effective July 1, 2012 – June 30, 2013

Federal Poverty Income Guidelines - Monthly Allowable Household Income		
Percent of Poverty Household size	150%	200%
1	1396	1,862
2	1,891	2,522
3	2,386	3,182
4	2,881	3,842
5	3,376	4,502
6	3,871	5,162
7	4,366	5,822
8	4,861	6,482
9	5,843	7,790
10	6,338	8,450
For each additional member add:	$495	$660

Determining Household Energy Burdens

Energy Burden is determined by dividing the household's one-month utility costs by the last 30 days of income.

Example:
Past 30 days of household income: $1,000
One-month current electric bill: $45, one-month current gas bill: $50 = $95

$95/$1,000 = 9.5% Energy Burden

If the applicant has more than one utility source, all utility source costs will be combined to determine the energy burden even though the applicant may only present a crisis on one account. In case the current utility cost cannot be obtained, a standard cost of $200 will be substituted in determining the energy burden. For electric and gas, a current one month bill can be obtained by calling the utility company.

An energy burden for non-regulated fuel sources such as wood, oil, coal and pellets can be determined by figuring the cost of the fuel from two consecutive purchase receipts. The 30 day fuel cost can be determined by dividing the total cost of the first purchase by the number of days between the first and the second purchases. If the fuel cost cannot be obtained, a standard cost of $200 may be substituted.

Example:

Propane receipt 1 dated 1/10/07
Cost: $300
Quantity: 100 gallons

Propane receipt **2** dated 4/10/07
Cost: $250
Quantity: 100 gallons

Date of Application: 7/10/07
Cost per day = $300 / 90 days = $3.33
30 day energy cost = $3.33 * 30 = $99.99

Household income: $1,000
30 day energy cost: $99.99
$99.99/$1,000 = 9.9% Energy Burden

When an applicant's rent includes the utility cost and that cost is not specified in the lease agreement, a $200 standard cost will be used in determining the energy burden. To demonstrate crisis, the renter must provide evidence of delinquent rent through a notice from the landlord. The intake worker must receive assurance from the landlord that the renter will not be evicted and that the grant will be applied appropriately to the renter's account.

Verification and Documentation

The applicant has the primary responsibility for providing all required verification. In situations where it is difficult for the applicant to obtain verification needed to complete the eligibility determination, the partnering agency will offer assistance in obtaining the verification.

Depending on funding source, there may be different eligibility guidelines.

For the Home Energy Assistance Fund Program and the Utility, Repair, Replacement, and Deposit Program only, please utilize the following exhibit (attached to your contract): Verifying Citizenship and Non-Citizen Legal Permanent Resident Status. This is attached for further guidance on determining applicant's citizen and non-citizen status.

Maintaining Client Records

The partnering agency is required to maintain supporting financial records, documentation and statistical records for three (3) years.

Policy Changes and Clarifications

Revisions to any policies and procedures will be reviewed and approved by the ACAA Home Energy Assistance Fund Advisory Board and the ACAA Board of Directors. All revisions will be sent to administering agencies to update their manuals. As revisions are received it will be the

staff's responsibility to update their copy of the Home Energy Assistance Fund Policy Manual. Issues regarding policy and/or procedures must be submitted in writing.

Monitoring Process

The Agency will be responsible for ensuring that the Fund policies and procedures are being followed. The Home Energy Assistance Fund staff will conduct application and case file reviews during monitoring visits.

Cooperation

Applicants must cooperate in all aspects of the application process. Applicants must provide requested information or verification and complete and sign an application. If the applicant refuses, the application will be denied. The partnering agency should document the lack of cooperation by the applicant for proper notation in refusal of assistance.

Confidentiality

Public law and federal regulations place restrictions on the release of confidential information, and set guidelines for the disclosure of non-confidential materials. All applications, records, files and communications of the Fund and its partners, relating to specific applicants for assistance and recipients of services funded by the Fund, are confidential records.

All information, regarding an applicant or recipient, is confidential and may be disclosed only for purposes of determining eligibility, providing services, or investigating suspected fraud in connection with the program. Applicants authorize access to their records by signing the application. Anyone not authorized on the application must have the applicant's written approval to access information.

Information that can be exchanged must pertain to the eligibility of the applicant, and excludes items that do not address eligibility, i.e., personal details. Inappropriate disclosure of information can result in severe disciplinary action, or could result in the suspension of the partnering agreement.

Access to information by inappropriate, unauthorized individuals or parties shall be considered a violation of the individual's right to confidentiality. Care should be taken to secure all files in the office so that unauthorized personnel do not have access to them. All records shall be open to any and all federal, state, and contractor auditors and/or examiners in the course of their regular audits.

General information, policy statements, or statistical materials which cannot be directly identified with any individual or family are not considered confidential. They may be given to, or provided by: agencies, helping organizations, or contracted parties, unless restricted by Arizona statutes, federal regulations, or court orders.

Non Discrimination Policy

In compliance with Title VI of the Civil Rights Act of 1964 and Executive Order 12250, no individual in Arizona shall be excluded from participation in, denied benefits or subjected to discrimination under any program or activity receiving Federal funds, because of: race, color, national origin, handicap, religion, or sex.

In compliance with the Age Discrimination Act of 1975, no individual shall be denied services or participation or be subjected to discrimination in any of its programs or activities on the basis of age.

Appeals Policy

The client/agency has the right to appeal a denial of assistance or an awarded grant amount. Appeals by the client will follow the policies of the intake partner agency and will be addressed by the Home Energy Assistance Fund administrative staff.

Complaints regarding the service of the administering agency, discrimination or other issues directly related with the administering agency and staff must be addressed to the office where the application was made.

Glossary of Terms

Standard Cost
The default cost associated with the utility consumption when the actual cost is not feasible.

Boarder
Boarders are one or more persons living in the same house paying rent to the owner of the home who also lives in the house or one who lives and pays rent in a commercial boarding house. Income of neither the owner of the home nor other boarders is not counted jointly. Boarders cannot be related by blood or law to the owner of the home.

Example:

> Susan and Jane live in the house that Susan owns. There is no blood or law relationship. Susan is renting a room to Jane and her two children. Jane and her two children are the boarders. Susan and Jane's income will be counted separately.

Crisis Reasons

1. **Loss of income, public assistance benefits or delay in receiving public assistance.** Examples may include but are not limited to: loss of employment, theft of income, serious illness which causes a loss of income, divorce, abandonment or death of wage earner, reduction of benefits or public assistance monies.

2. **Unexpected or unplanned expenses.** Examples may include by are not limited to: car repairs, medical bills, natural or man-made disasters, death in immediate family, court fines of a minor child.

3. **A condition that endangers the health and safety of the household.** Examples may include but are not limited to: lead poisoning, condemned property, infestation, domestic violence, asbestos, medical condition that require utility service to operate life-saving equipment such as oxygen machines, heart monitors, breathing machines, etc.

Customer of Record
The name of the person on the utility account.

Delinquent Account
An account that is one or more days past due.

Household
Consists of each person living in the home at the time of application.

Late Fees
Charges imposed by the utility company to the account due to a tardy payment to the account.

Power of Attorney
A legal document authorizing one person to act on behalf of another.

Roommates
Roommates are one or more persons living in the same house paying rent to a landlord living outside of the home. The income for each roommate is counted as the household income.

Examples:

Linda and Donna are roommates. Donna pays rent to Linda, who has a rental agreement with a landlord living outside the home. They will be considered roommates and their income will be counted jointly.

Jane and her new baby live with her Aunt Betty. Jane no longer receives child support and cannot pay her Aunt any rent money for the month of June. Because they are related, Jane is considered a roommate. Jane and Betty's income will be counted jointly.

Service Reestablishment Fees and Reconnection Fees
Charges assessed by the utility company to reestablish/reconnect service following a service disconnection due to nonpayment.

Exhibit E

ARIZONA PUBLIC SERVICE (APS)
CRISIS BILL ASSISTANCE PROGRAM SUMMARY

This program was funded as a result of the December, 2009 APS Rate Case Settlement. Funds were allocated for bill assistance to households that fall between 150-200% of the Federal Poverty Guidelines.

CAN PAY	APS utility bills on client's present address ONLY and must be a customer of record. **Cannot pay deposits, reconnect fees or establishment charges.**
MAXIMUM GRANT AMOUNT:	$400.00 for current and past due amounts. No credit can be given on an account.
SERVICE CODES:	UTA
PROGRAM YEAR	A household may be assisted only once in a 12-month period.
ELIGIBILITY CRITERIA	Client household must be a current APS customer. Clients with disconnected accounts are NOT considered current customers. Household income for the most recent 30 days, including the date of application, must be at **150 % and no more than 200% of the current federal poverty guidelines**. All income must be verified. **Households with no income do not qualify for this program.**
CRISIS:	Hardship reason must be documented on the application only
CLIENT FILES MUST CONTAIN:	1. Application for benefits. 2. Most recent APS utility bill. 3. Income verification for the last 30 days including application date.

Exhibit F

SALT RIVER PROJECT (SRP)
BILL ASSISTANCE PROGRAM SUMMARY

REVISED 10/3/2011

CAN PAY	Utility bills that include: disconnect amounts, past due amounts, current charges, and balance from previous SRP address.
MAXIMUM GRANT AMOUNT:	**$600.00.** No credit can be given on an account.
SERVICE CODES:	UTA
PROGRAM YEAR	A household may be assisted only once in a 12-month period.
ELIGIBILITY CRITERIA	Client household must be a SRP customer. Household income for the most recent 30 days, including the date of application, **must meet the Arizona Department of Economic Security Division of Aging and Adult Services – Community Services Monthly 60% State Median Income (SMI) guidelines.** All income must be verified.
HARDSHIP:	The hardship reason must be documented on the application only.
CLIENT FILES MUST CONTAIN:	1. Application for benefits. 2. Most recent SRP utility bill/for M-Power customers - 30 day usage receipt from SRP 3. Income verification for the last 30 days (including date of date of application)

EXHIBIT G

FEDERAL POVERTY GUIDELINES
Effective July 1, 2012 - June 30, 2013

Arizona Community Action Association
Home Energy Assistance Fund
Percent of Poverty Display - Monthly Gross Income

Information based on the Federal Register published on January 26, 2012

Percent of Poverty	Household Size 1	2	3	4	5	6	7	8	9	10	For each additional member add:
0% to 74%	$0 **$689**	$0 **$933**	$0 **$1,177**	$0 **$1,422**	$0 **$1,666**	$0 **$1,910**	$0 **$2,154**	$0 **$2,398**	$0 **$2,882**	$0 **$3,127**	**$244**
75% to **100%**	$690 **$931**	$934 **$1,261**	$1,178 **$1,591**	$1,423 **$1,921**	$1,667 **$2,251**	$1,911 **$2,581**	$2,155 **$2,911**	$2,399 **$3,241**	$2,883 **$3,895**	$3,128 **$4,225**	**$330**
101% **125%**	$932 **$1,165**	$1,262 **$1,577**	$1,592 **$1,989**	$1,922 **$2,402**	$2,252 **$2,814**	$2,582 **$3,226**	$2,912 **$3,640**	$3,242 **$4,051**	$3,896 **$4,869**	$4,226 **$5,281**	**$413**
126% **150%**	$1,166 **$1,396**	$1,578 **$1,891**	$1,990 **$2,386**	$2,403 **$2,881**	$2,815 **$3,376**	$3,227 **$3,871**	$3,641 **$4,366**	$4,052 **$4,861**	$4,870 **$5,843**	$5,282 **$6,338**	**$495**
151% **200%**	$1,398 **$1,862**	$1,892 **$2,522**	$2,387 **$3,182**	$2,882 **$3,842**	$3,377 **$4,502**	$3,872 **$5,162**	$4,367 **$5,822**	$4,862 **$6,482**	$5,844 **$7,790**	$6,339 **$8,450**	**$660**
Annual	*11,170*	*15,130*	*19,090*	*23,050*	*27,010*	*30,970*	*34,930*	*38,890*	*46,740*	*50,700*	*3960*

Arizona Department of Economic Security
Division of Aging and Adult Services (DAAS) - Community Services
Low Income Home Energy Assistance Program (LIHEAP)
Monthly 60% State Median Income (SMI) **(FOR LIHEAP PROGRAM ONLY)**
(October 1, 2011 - June 30, 2012)

Number of Household Members

Income Points	1	2	3	4	5	6	7	8	9	10	For each additional member add:
5 points											
0% to 25%	$0 **$449**	$0 **$588**	$0 **$726**	$0 **$864**	$0 **$1,002**	$0 **$1,140**	$0 **$1,166**	$0 **$1,192**	$0 **$1,295**	$0 **$1,415**	**$119**
4 points											
26% to 50%	$450 **$899**	$589 **$1,175**	$727 **$1,452**	$865 **$1,728**	$1,003 **$2,004**	$1,141 **$2,281**	$1,167 **$2,333**	$1,193 **$2,385**	$1,296 **$2,591**	$1,416 **$2,829**	**$239**
3 points											
51% to 75%	$900 **$1,348**	$1,176 **$1,763**	$1,453 **$2,177**	$1,729 **$2,592**	$2,005 **$3,007**	$2,282 **$3,421**	$2,334 **$3,499**	$2,386 **$3,577**	$2,592 **$3,886**	$2,830 **$4,244**	**$358**
2 points											
76% to 100%	$1,349 **$1,797**	$1,764 **$2,350**	$2,178 **$2,903**	$2,593 **$3,456**	$3,008 **$4,009**	$3,422 **$4,562**	$3,500 **$4,666**	$3,578 **$4,769**	$3,887 **$5,181**	$4,245 **$5,659**	**$478**

Revision date 9/30/2011

GILA COUNTY ATTORNEY
Bradley D. Beauchamp

Re: County Attorney's Office "approval as to form" of contract or agreement.

To whom it may concern:

The County Attorney's Office has reviewed the contract or agreement attached to this agenda item and has determined that it is in its proper form and is within the powers and authority granted under the laws of this state to the public agency requesting the County Attorney's Office review.

Explanation of the Gila County Attorney's Office "Approval as to Form" Review

The Gila County Attorney's Office is often called upon to review contracts and other agreements between public entities represented by the County Attorney and private vendors, contractors, and individuals.

In performing this review, the County Attorney's Office reviews these contracts to see that they are in "proper form" prior to their execution. "Proper form" means that the contract conforms to fundamental contract law, conforms to specific legislative requirements, and is within the powers and authority granted to the public agency. It does not mean that the County Attorney's Office approves of or supports the policy objectives contained in the contract. That approval is solely the province of the public agency through its elected body.

The public agency or department submitting the contract for review has the responsibility to read and understand the contract in order to completely understand its obligations under the contract if it is ultimately approved by the public entity's board. This is because while the County Attorney's Office can approve the contract as to form, the office may not have any idea whether the public agency has the capacity to actually comply with its contractual obligations. Also, the County Attorney's Office does not monitor contract compliance. Hence the public entity or

submitting department will need to be prepared to monitor their own compliance. A thorough knowledge of the provisions of the contract will be necessary to monitor compliance.

Before signing a contract "approved as to form," the County Attorney's Office will answer any questions or concerns the public agency has about the contract. It is the responsibility of the public agency or department submitting the contract for review to ask any specific questions or address any concerns it has about the contract to the County Attorney's Office at the same time they submit the contract for review. Making such an inquiry also helps improve the County Attorney's Office review of the contract because it will help focus the review on specific issues that are of greatest concern to the public agency. Failing to make such an inquiry when the agency does have issues or concerns will decrease the ability of the County Attorney's Office to meaningfully review the agreement.

ARF-1669 **Consent Agenda Item 4- B**

Regular BOS Meeting

Meeting Date: 02/19/2013

Submitted For:	Barbara Valencia, WIA Department Program Manager	Submitted By:	Barbara Valencia, WIA Department Program Manager, Community Services Division
Department:	Community Services Division	Division:	WIA Department
Fiscal Year:	Program Year 2012	Budgeted?:	Yes
Contract Dates Begin & End:	September 1, 2012 - June 30, 2014	Grant?:	Yes
Matching Requirement?:	No	Fund?:	Replacement

Information

Request/Subject

Agreement between Gila County (dba Gila/Pinal Workforce Investment Board) and Portable Practical Educational Preparation, Inc. (PPEP).

Background Information

The purpose of this Agreement is to provide the required One-Stop services outlined in the Workforce Investment Act of 1998. As a mandated partner in the One-Stop Delivery System, Portable Practical Educational Preparation, Inc. will be provided the necessary office space to perform work duties.

Evaluation

Portable Practical Educational Preparation, Inc., will reimburse Gila County (dba Gila/Pinal Workforce Investment Board) for its share of the costs associated with co-locating at the Pinal County Comprehensive One-Stop Center as per breakdown in the Resource Agreement. Office work space is 100 sq. feet and common space is 184 sq. feet. Total annual cost is $5,964.

Conclusion

The Agreement between Gila County and Portable Practical Educational Preparation, Inc. for office space and common area space is to perform work duties at the Pinal County Comprehensive One-Stop Center in Casa Grande.

Recommendation

The Workforce Investment Board (WIB) Program Manager is recommending that the Gila County Board of Supervisors approve the Agreement between Gila County (dba Gila/Pinal Workforce Investment Board) and Portable Practical Educational Preparation, Inc. for work space at the Pinal County Comprehensive One-Stop Center in Casa Grande in the amount of $5,964 per year.

Suggested Motion

Approval of an Agreement between Gila County (dba Gila/Pinal Workforce Investment Board) and Portable Practical Educational Preparation, Inc. (PPEP) whereby Gila County will provide PPEP with work space at the Pinal County Comprehensive One-Stop Center in Casa Grande in the amount of $5,964 per year for the period September 1, 2012, through June 30, 2014.

Attachments

PPEP AGREEMENT

Legal Explanation

AGREEMENT

BETWEEN

PORTABLE PRACTICAL EDUCATIONAL PREPARATION, INC.

AND

GILA COUNTY
(dba Gila/Pinal Workforce Investment Board)

FOR

GILA/PINAL WORKFORCE INVESTMENT ONE-STOP CENTERS

CO-LOCATION – RESOURCE SHARING AGREEMENT

SEPTEMBER 1, 2012 TO JUNE 30, 2014

AGREEMENT

This Agreement (Agreement) is between Portable Practical Educational Preparation, Inc. (PPEP), and Gila County dba Gila/Pinal Workforce Investment Board (hereafter collectively referred to as Gila-Pinal WIB).

WHEREAS Portable Practical Education Preparation, Inc. (PPEP) is duly authorized to execute and administer contracts under A.R.S. §41-1954 (A) (1) (d); and

WHEREAS Gila County is duly authorized to execute and administer contracts under A.R.S. § 11-201; and

THEREFORE Portable Practical Educational Preparation, Inc. (PPEP) and Gila/Pinal WIB agree to abide by all the terms and conditions set forth in this Contract. This Agreement shall constitute the entire agreement between the parties and supersede all other understandings, oral or written.

FOR AND ON BEHALF OF PORTABLE PRACTICAL EDUCATIONAL PREPARATION, INC.

Barbara Alarcon
Signature

BARBARA A. CORONADO
Printed Name

PPEP COO/DIRECTOR OF FINANCE
Title

01/11/2013
Date

FOR AND ON BEHALF OF THE GILA COUNTY dba GILA/PINAL WORKFORCE INVESTMENT BOARD

Signature

Printed Name

Chairman, Gila County Board of Supervisors
Title

Date

Attest:

Marian Sheppard, Chief Deputy Clerk

Date

Approve as to form:

Bryan B. Chambers, Chief Deputy County Attorney

Date

1.0 PARTIES

1.1 This Agreement is between Portable Practical Educational Preparation, Inc. and Gila County dba Gila/Pinal Workforce Investment Board; hereinafter called "Gila/Pinal WIB".

1.2 In consideration of the mutual representations and obligations hereunder, Portable Practical Educational Preparation, Inc. and the Gila/Pinal WIB agree to abide by all the terms and conditions set forth herein.

2.0 TERM OF AGREEMENT

2.1 **Term**

The term of this Agreement shall have an effective date of September 1, 2012 and end on June 30, 2014, unless otherwise agreed upon by both parties in writing. The term may not exceed a total of five (5) years.

2.2 **Extension**

This Agreement may be extended through a written amendment by mutual agreement of the parties.

2.3 **Termination**

2.3.1 This Agreement may be terminated by mutual agreement of the parties at any time during the term of this Agreement.

2.3.2 Each party shall have the right to terminate this Agreement by hand-delivering to the other party written notice of termination at least thirty (30) days prior to the effective date of said termination.

2.3.3 In the event of early termination for any reason, any funds advanced to either party shall be returned to the advancing party within ten (10) days after the date of termination or upon receipt of notice of termination of the Agreement, which is earlier.

2.3.4 Either party may immediately terminate this Agreement if they determine that the health, welfare or safety of service recipient is endangered.

2.3.5 In the event of termination or suspension of the Agreement by either party, such termination or suspension shall not affect the obligation of both parties to indemnify each other and the State for any claim by any third party against the State or the terminating party arising from the other party's performance of this Agreement and for which the other party would otherwise be liable under this Agreement. To the extent such indemnification is excluded by A.R.S. §41-621, et seq. or an obligation is unauthorized under A.R.S. §35-154, the provisions of this paragraph shall not apply.

3.0 DEFINITIONS

3.1 "Gila/Pinal WIB" means the party who is providing co-location space. In this instance the Gila/Pinal WIB is Gila County dba Gila-Pinal Workforce Investment Board.

3.2 "Gila-Pinal WIB Site Location" means the facility where the co-location of integrated program services will occur.

3.3 "Co/locator" means the party who is co-locating. In this instance the Co-locator is Portable Practical Educational Preparation, Inc.

3.4 "Agreement" means the executed Agreement between the parties.

4.0 PURPOSE

4.1 The purpose of this Agreement is to implement the Resource Agreement attached hereto as Exhibit 1. These documents provide for funding arrangements between co-locator, a partner agency that is co-located in the Gila/Pinal Workforce Investment Area. This partnership allows for integrated one-stop service delivery for employers, job seekers, and individuals seeking career advancement in Pinal County in accordance with the Workforce Investment Act (P.L. 105-220 of 1998).

5.0 RESPONSIBILITIES

5.1 Portable Practical Educational Preparation, Inc. and Gila/Pinal WIB agree as follows:

5.2 The Gila/Pinal WIB shall provide Portable Practical Educational Preparation, Inc. with 284 net square feet of workspace at Casa Grande (Section 12.1 Occupancy Information) and shall provide the necessary common area needed for Portable Practical Educational Preparation, Inc. staff to perform work duties.

5.3 Portable Practical Educational Preparation, Inc. will reimburse the Gila/Pinal WIB for usage of the workspaces and a percentage of the common areas used by Portable Practical Educational Preparation, Inc. staff at both locations on a monthly basis.

6.0 PAYMENT REQUIREMENTS

6.1 Portable Practical Educational Preparation, Inc. shall prepare and issue a payment by the thirtieth (30) day of the month provided that they are in receipt of an invoice from Gila/Pinal WIB. If no invoice has been received by the 15th of the month, Portable Practical Educational Preparation, Inc. will have 15 working days after receipt of said invoice to issue a payment. The payment shall be submitted to the address shown in Section 7.1.

7.0 NOTICES

7.1 All notices to the Gila/Pinal WIB regarding this Agreement shall be sent to the following address:

Barbara Valencia, Program Manager
Gila County dba Gila/Pinal Workforce Investment Board
5515 South Apache Avenue, Suite 200
Globe, Arizona 85501
Phone: 928-402-8657
Fax: 928-425-9468

7.2 The following One Stop Career Center Staff will handle routine non-monetary issues or concerns:

Casa Grande	Marty Clay	520-374-3001
Globe	Barbara Valencia	928-402-8657

7.4 Notices, requests or demands given or made upon the parties hereto, pursuant to or in connection with this Agreement, unless otherwise noted, shall be delivered in person or sent by United States Mail, postage prepaid, to the parties at their respective addresses as indicated above.

7.5 All notices shall reference both of the contract numbers as indicated on the signature page of this Agreement.

8.0 NON-DISCRIMINATION & EQUAL OPPORTUNITY ASSURANCE

8.1 Portable Practical Educational Preparation, Inc. shall comply with Executive Order 75-5, as modified by Executive Order 99-4, which mandates that all persons, regardless of race, color, religion, sex, age, national origin, or political affiliation, shall have equal access to employment opportunities, and all other applicable State and Federal employment laws, rules and regulations, including the Americans with Disabilities Act. Portable Practical Educational Preparation, Inc. shall take affirmative action to ensure that applicants for employment and employees are not discriminated against due to race, creed, religion, sex, national origin or disability.

8.2 Portable Practical Educational Preparation, Inc. and Gila/Pinal WIB shall comply with the Americans with Disabilities Act of 1990 (Public Law 101-336) and the Arizona Disability Act of 1992 (A.R.S. §41-1492 et seq.), which prohibits discrimination on the basis of physical or mental disabilities in delivering contract services or in the employment, or advance in employment, of qualified persons.

8.3 Portable Practical Educational Preparation, Inc. shall comply with the following:

(1) Section 188 of the Workforce Investment Act of 1998 (WIA), which prohibits discrimination against all individuals in the United States on the basis of race, color, religion, sex, national origin, age, disability, political affiliation, or belief, and against beneficiaries on the basis of either citizenship/status as a lawfully admitted immigrant authorized to work in the United States or participation in any WIA Title I B financially assisted program or activity;

(2) Title VI of the Civil Rights Act of 1964, as amended, which prohibits discrimination on the basis of race, color, and national origin;

(3) Section 504 of the Rehabilitation Act of 1973, as amended, which prohibits discrimination against qualified individuals with disabilities;

(4) The Age Discrimination Act of 1975, as amended, which prohibits discrimination on the basis of age; and

(5) Title IX of the Education Amendments of 1972, as amended, which prohibits discrimination on the basis of sex in educational programs.

9.0 CANCELLATION FOR CONFLICT OF INTEREST

9.1 Pursuant to A.R.S. §38-511, the State, its political subdivisions or any department or agency of either may, within three years after its execution, cancel any contract without penalty or further obligation, made by the State, its political subdivisions or any department or agency of either if any person significantly involved in initiating, negotiating, securing, drafting or creating the Contract on behalf of the State, its political subdivisions or any department or agency of either is, at any time while the Contract or any extension of the Contract is in effect, an employee or agent of any other party to the Contract in any capacity or a consultant to any other party to the Contract with respect to the matter of the Contract. A cancellation made pursuant to this provision shall be effective when the Gila-Pinal WIB received written notice of the cancellation, unless the notice specifies a later time.

10.0 AMENDMENTS OR MODIFICATIONS

10.1 This Agreement may be amended or modified at any time by mutual agreement. No agent, employee or other representative of either party is empowered to alter any of the terms of the Agreement, unless done in writing and signed by the authorized representative of the respective parties.

10.2 **Exceptions**

Either party shall give written notice to the other party of any non-materials alteration that affects the provisions of this Agreement. Non-material alterations that do not require a written amendment are as follows:

1. Change of address.
2. Change of telephone number.
3. Change in authorized signatory.
4. Change in the name and/or address of the person to whom notices are to be sent.
5. Changes in contract related personnel positions of the Gila-Pinal WIB which do not affect staffing rations, staff qualifications or specific individuals required under this contract.

11.0 IT 508 COMPLIANCE

11.1 Unless specifically authorized in the Contract, any electronic or information technology offered to the State of Arizona under this Agreement shall comply with A.R.S. §41-2531 and 2532 and Section 508 o0f the Rehabilitation Act of 1973, which requires that employees and members of the public shall have access to and use of information technology that is comparable to the access and use by employees and members of the public who are not individuals with disabilities.

12.0 OCCUPANCY INFORMATION

12.1 **Site Location**

Location I – Casa Grande
Gila-Pinal Workforce Investment Board
1015 E. Florence Boulevard
Casa Grande, Arizona 85222

12.2 **Costs**

Portable Practical Educational Preparation, Inc. will reimburse Gila County dba Gila/Pinal Workforce Investment Board for their share of the costs associated with co-locating at the above locations (Section 18.1) as per the breakdown in the attached Resource Sharing Agreements (RSA) – Exhibit 1. Casa Grande Location annual costs equals $5964.00.

12.3 Gila/Pinal WIB shall ensure the interior janitorial services and exterior ground maintenance.

12.4 Gila/Pinal WIB shall ensure maintenance of the structural elements, heating, cooling and other systems of the co-location space/facility.

13.0 TELECOMMUNICATIONS, VOICE/DATA

13.1 The percentage of the communication costs are integrated and are part of Portable Practical Educational Preparation, Inc.'s total monthly charges as agreed to in the RSA. Portable Practical Educational Preparation, Inc. will not be billed separately for these costs.

13.2 **Voice Communications**

Voice communication adds, moves, or changes are the responsibility of each party. The party requesting the adds, moves, or changes will coordinate the payment with the party owning the equipment. The responsible party renders payment upon invoice by the party owning the equipment.

13.3 **Data Communications**

Data communications is the responsibility of each party. Adds, moves, and changes to data communications is the responsibility of each party.

14.0 OFFICE FURNITURE & EQUIPMENT

14.1 The purchasing party shall retain all furniture and office equipment purchased during the term of this Agreement.

14.2 **Equipment Supplies – Casa Grande**

The equipment supplies use such as paper, toner and maintenance costs are the responsibility of each program.

14.3 **Office Supplies – Casa Grande**

Each party will be responsible for providing their staff with office supplies needed to perform their work duties.

15.0 VETERANS' PRIORITY PROVISIONS

15.1 This program, funded by the U.S. Department of Labor is subject to the provisions of the "Jobs for Veterans Act" (JVA), Public Law 107-288 (38 USC 4215). The JVA provides priority of service to veterans and spouses of certain veterans for the receipt of employment, training, and placement services. Please note that to obtain priority service, a veteran must meet the program's eligibility requirements. Training and Employment Guidance Letter (TEGL) No. 5-03(September 16, 2003) provided general guidance on the scope of the veterans priority statute and its effect on current employment and training programs. In addition to the TEGL, a series of questions and answers related to priority of service is posted at http://www.doleta.gov/programs/VETs/ for fifteen (15) programs administered by the Employment and Training Administration (ETA). The Planning Guidance (either the Stand-Alone Planning Guidance at 70 FR 19206 (April 12, 2005)) or the Unified Planning Guidance at 70 FR 19222 (April 12, 2005)) and TEGL 13-06 and TEGL 13-06, Change 1, entitled "Instructions for Workforce Investment Act and Wagner-Peyser Act State Planning and Waiver Requests for Years 3 and 4 of the Strategic Five-Year State Plan (PY 2007 and 2008)" required states to describe the policies and strategies in place to ensure, pursuant to the Jobs for Veterans Act, that priority of service is provided to veterans (and certain spouses) who otherwise meet the eligibility requirements for all employment and training programs funded by the U.S. Department of Labor and administered by ETA. In addition, the states were required to provide assurances that they will comply with the Veterans' Priority Provisions established by the Jobs for Veterans Act (38 USC 4215). States are bound by their approved state plans.

16.0 AMERICANS WITH DISABILITIES ACT

16.1 Both parties to this Agreement shall comply with the Americans' with Disabilities Act of 1990 (P.O. 101-336), and as may be amended.

17.0 COMPLIANCE WITH CIVIL RIGHTS ACT

17.1 Both parties shall comply with Title VII of the Civil Rights Act of 1964, as amended, the Age Discrimination in Employment Act, and State Executive Order No. 99-4, which mandates that all persons, regardless of race, color, religion, sex, age, national origin or political affiliation, shall have equal access to employment opportunities. The parties shall comply with the Rehabilitation Act of 1973, as amended, which prohibits discrimination on the basis of disability, in delivering contract services.

18.0 LEGAL ARIZONA WORKERS ACT COMPLIANCE

Firm hereby warrants that it will at all times during the term of this Contract comply with all federal immigration laws applicable to Firm's employment of its employees, and with the requirements of A.R.S. § 23-214 (A) (together the "State and Federal Immigration Laws"). Firm shall further ensure that each subcontractor who performs any work for Firm under this contract likewise complies with the State and Federal Immigration Laws.

County shall have the right at any time to inspect the books and records of Firm and any subcontractor in order to verify such party's compliance with the State and Federal Immigration Laws.

Any breach of Firm's or any subcontractor's warranty of compliance with the State and Federal Immigration Laws, or of any other provision of this section, shall be deemed to be a material breach of this Contract subjecting Firm to penalties up to and including suspension or termination of this Contract. If the breach is by a subcontractor, and the subcontract is suspended or terminated as a result, Firm shall be required to take such steps as may be necessary to either self-perform the services that would have been provided under the subcontract or retain a replacement subcontractor, (subject to County approval if MWBE preferences apply) as soon as possible so as not to delay project completion.

Firm shall advise each subcontractor of County's rights, and the subcontractor's obligations, under this Article by including a provision in each subcontract substantially in the following form: "Subcontractor hereby warrants that it will at all times during the term of this contract comply with all federal immigration laws applicable to Subcontractor's employees, and with the requirements of A.R.S. § 23-214 (A). Subcontractor further agrees that County may inspect the Subcontractor's books and records to insure that Subcontractor is in compliance with these requirements. Any breach of this paragraph by Subcontractor will be deemed to be a material breach of this contract subjecting Subcontractor to penalties up to and including suspension or termination of this contract."

Any additional costs attributable directly or indirectly to remedial action under this Article shall be the Firms. In the event that remedial action under this Article results in delay to one or more tasks on the critical path of Firm's approved construction or critical milestones schedule, such period of delay shall be deemed excusable delay for which Firm shall be entitled to an extension of time, but not costs.

19.0 ANTI-TERRORISM WARRANTY

Pursuant to **A.R.S. §35-397** the Firm certifies that it does not have scrutinized business operations in Iran or Sudan and that they are in compliance with the Export Administration Act and not on the Excluded Parties List.

20.0 EXHIBITS

The following list of exhibits constitutes an integral part of subject Agreement:

Exhibit 1 Resource Sharing Agreement for Location – Casa Grande

GILA/PINAL WOKFORCE INVESTMENT AREA
RESOURCE SHARING AGREEMENT
Exhibit 1

OVERVIEW and PURPOSE

This Resource Sharing Agreement (RSA) provides the shared funding arrangements entered into by the partners in the **Gila/Pinal Workforce Investment Area** One-Stop Delivery System serving employers, job seekers and those seeking career advancement **in Gila and Pinal County.** Through this Agreement between **Portable Practical Educational Preparation, Inc.** and **Gila/Pinal Workforce Investment Board,** the partners have identified those costs related to the operation and maintenance of the One-Stop delivery system that are of mutual benefit and have identified mechanisms for the payment of such costs.

The Agreement contains the following sections:

I. Effective Date and Term
II. Identification of Shared Costs
III. Resource Sharing
IV. Modification and Reconciliation Procedures
V. Authority and Signatures

I. Effective Date and Term

This RSA will commence on September 1, 2012 and shall remain self-perpetuating with an amendment clause of 30 days unless the local Workforce Board extends, amends, or terminates it.

II. Identification of Shared Costs

The costs identified as shared are reflected in the budget document shown as the attached Identification of Share Costs to this RSA. The following partner organization **Portable Practical Educational Preparation, Inc.** has agreed to provide services through the **Gila/Pinal Counties Comprehensive One-Stop Centers** and to share costs that are mutually beneficial.

III. Resource Sharing

Each partner hereby agrees to provide the resources necessary to fund their proportionate share of the shared costs as reflected in the Identification of Shared Costs sheet. **Gila County** has the lease on the building and **Portable Practical Educational Preparation, Inc.** makes monthly payments to **Gila County** representing the partner's fair share based on square footage used. Each partner agrees to provide additional resources as required to fulfill their proportionate share of common costs.

Partner agencies will develop appropriate schedules for the provision of staff resources, and WIB Staff will also develop the timing and provision of other resources such as office supplies and workshops.

IV. DISPUTE RESOLUTION PROCESS

It is expected one-stop partners will function by consensus. In instances where consensus cannot be reached at the lowest level and the functioning of the one-stop system is impaired, those one-stop

partners who are parties to the dispute shall submit to the following dispute resolution (complaint) procedures:

- If the partners are unable to resolve a dispute to the satisfaction of the members who are parties to the dispute, the complaint shall be submitted in writing to the local One-Stop Committee within 15 days of the initial dispute.

- The local One-Stop Committee shall evaluate the merits of the dispute and may attempt to resolve the dispute through mediation. However, in all cases, the One-Stop Committee shall prepare a response to the complaint within 30 days.

- If any party to the dispute is not satisfied with the decision of the local One-Stop Committee, the dispute shall be referred to a five person hearing panel, chosen by the parties to the dispute, for resolution. The panel shall be requested to make a determination within 30 days. The decision of the panel shall be final and binding on all parties to the dispute.

V. GENERAL TERMS AND CONDITIONS

Confidentiality: Each party to this Agreement warrants that it will comply with the provisions of the Workforce Investment Act and other applicable federal and state laws and regulations including but limited to those relating to confidentiality of customer records.

Each party agrees to use and honor a Client Information Release as a means for exchanging information about each client. This form will remain private and confidential in the files of the agency serving the client.

Funding: The parties agree to provide funding for the shared costs of the partnership in accordance with the Agreement. The Partners assume full responsibility for their respective costs associated with their performance of the terms of this Agreement. In no event, except as may be provided in a subsequent agreement, shall any partner be obligated to pay or reimburse any expense incurred by another partner under this plan.

VI. Authority and Signatures

The individuals signing this agreement have the authority to commit the party they represent to the terms of this RSA, and do so by signing.

AGREED and EXECUTED effective on September 1, 2012

Gila/Pinal Workforce Investment Board	**Portable Practical Educational Preparation, Inc.** **Local Workforce Investment Act Partner**
Signature	Signature
Gila/Pinal Workforce Investment Chairman	CAO Title
Gila/Pinal Workforce Investment Board Agency/Organization Name	PPEP, Inc. Agency/Organization Name
5515 S. Apache Avenue, Suite 200 Address	802 E. 44th St. Address
Globe, AZ 85501 City, State, Zip	Tucson, Az. 85713 City, State, Zip
(928) 402-8657 Telephone Number	520-770-2500 Telephone Number
(928) 425-9468 Fax Number	520-882-5503 Fax Number
bvalencia@co.gila.az.us Email Address	khogan@ppep.org Email Address

Gila/Pinal Workforce Investment Area
Resource Sharing Agreement - Casa Grande Location
Identification of Shared Costs

DESCRIPTION:	CAAG	WIB	REPAC	MANPOWER	ADES	PPEP		TOTAL
OFFICE SQUARE FT.	120	105	100	96	120	100		641
OFFICE SQUARE FT.	100	75	74		64			313
OFFICE SQUARE FT.		100	125		64			289
OFFICE SQUARE FT.		100			64			164
OFFICE SQUARE FT.		64			64			128
OFFICE SQUARE FT.					64			64
OFFICE SQUARE FT.					64			64
OFFICE SQUARE FT.					64			64
OFFICE SQUARE FT.					64			64
OFFICE SQUARE FT.					64			64
					100			100
								0
TOTAL:	220	444	299.00	96.00	796.00	100		1955.00

DEPARTMENT NAME:	CAAG	WIB	REPAC	MANPOWER	ADES	PPEP		
COMMON AREAS	406.00	819.00	551.00	177.00	1467.00	184.00		3604
OFFICES	220.0	444.00	299.00	96.00	796.0	100.00		1955
$ per square footage	$ 21.00	$ 21.00	$ 21.00	$ 21.00	$ 21.00	$ 21.00		
TOTAL SQ FOOTAGE	626.0	1263.0	850.0	273.0	2263.0	284.0		
YEARLY COST	$13,146.00	$26,523.00	$17,850.00	$5,733.00	$47,523.00	$5,964.00		$116,739.00
MONTHLY COST	$1,095.50	$2,210.25	$1,487.50	$477.75	$3,960.25	$497.00		$9,728.25

Casa Grande One-Stop Location

Allocation Basis	Yrly Cost	Mthly Cost	REPAC Amount	WIB Amount	MANPOWER Amount	ADES Amount	PPEP Amount	CAAG Amount	Amount
Offices	$ 41,055.00	$ 3,421.25	$523.25	$ 777.00	$ 168.00	$ 1,393.00	$ 175.00	$ 385.00	$ 3,421.25
									$ -
									$ -
Common Areas	$ 75,684.00	$ 6,307.00	$ 964.25	$ 1,433.25	$ 309.75	$ 2,567.25	$ 322.00	$ 710.50	$ 6,307.00
TOTAL MONTHLY COST		$ 9,728.25	$ 1,487.50	$ 2,210.25	$ 477.75	$ 3,960.25	$ 497.00	$ 1,095.50	$ 9,728.25
ANNUAL COSTS	**$116,739.00**	**$116,739.00**	**$17,850.00**	**$26,523.00**	**$5,733.00**	**$47,523.00**	**$5,964.00**	**$13,146.00**	**$116,739.00**

THIS SPREADSHEET IS BASED ON TOTAL SQUARE FEET PER CAC

TOTAL SQUARE FEET	**5559**
TOTAL OFFICE SQ FEET	**1955**
COMMON AREA	**3604**

COMMON AREAS ONE-STOP	
RESOURCE ROOM	906
INTERVIEW ROOM	147
BREAKROOM	100
ONE-STOP SERVER	45
UNISEX BATHROOM	71
CONFERENCE ROOM	233
RECEPTION	114
HALLWAYS	1004
STORAGE ROOM	71
TOTAL COMMON AREA	2691
CAC AND ONE-STOP	
RECEPTION	631
CAC SERVER	45
RESTROOM	252
BREAK ROOM	264
HALLWAY	381
RESTROOM	253
TOTAL COMMON AREA	1826
TOTAL CAC & ONE-STOP COMMON AREA	913
TOTAL ONE-STOP CA	**2691**
TOTAL ONE-STOP & CAC	**913**
TOTAL COMMON AREA	**3604**

	DEDICATED SQ FT	% DED SQ FT	C. AREA SQ FT
CAAG	220	11%	406
WIB	444	23%	819
REPAC	299	15%	551
MANPOWER	96	5%	177
ADES	796	41%	1467
PPEP	100	5%	184
TOTAL	1955	100%	3604

GILA COUNTY ATTORNEY
Bradley D. Beauchamp

Re: County Attorney's Office "approval as to form" of contract or agreement.

To whom it may concern:

The County Attorney's Office has reviewed the contract or agreement attached to this agenda item and has determined that it is in its proper form and is within the powers and authority granted under the laws of this state to the public agency requesting the County Attorney's Office review.

Explanation of the Gila County Attorney's Office "Approval as to Form" Review

The Gila County Attorney's Office is often called upon to review contracts and other agreements between public entities represented by the County Attorney and private vendors, contractors, and individuals.

In performing this review, the County Attorney's Office reviews these contracts to see that they are in "proper form" prior to their execution. "Proper form" means that the contract conforms to fundamental contract law, conforms to specific legislative requirements, and is within the powers and authority granted to the public agency. It does not mean that the County Attorney's Office approves of or supports the policy objectives contained in the contract. That approval is solely the province of the public agency through its elected body.

The public agency or department submitting the contract for review has the responsibility to read and understand the contract in order to completely understand its obligations under the contract if it is ultimately approved by the public entity's board. This is because while the County Attorney's Office can approve the contract as to form, the office may not have any idea whether the public agency has the capacity to actually comply with its contractual obligations. Also, the County Attorney's Office does not monitor contract compliance. Hence the public entity or

submitting department will need to be prepared to monitor their own compliance. A thorough knowledge of the provisions of the contract will be necessary to monitor compliance.

Before signing a contract "approved as to form," the County Attorney's Office will answer any questions or concerns the public agency has about the contract. It is the responsibility of the public agency or department submitting the contract for review to ask any specific questions or address any concerns it has about the contract to the County Attorney's Office at the same time they submit the contract for review. Making such an inquiry also helps improve the County Attorney's Office review of the contract because it will help focus the review on specific issues that are of greatest concern to the public agency. Failing to make such an inquiry when the agency does have issues or concerns will decrease the ability of the County Attorney's Office to meaningfully review the agreement.

ARF-1678 **Consent Agenda Item 4- C**

Regular BOS Meeting

Meeting Date: 02/19/2013

Submitted For:	Joseph Heatherly, Finance Director	Submitted By:	Dana Sgroi, Contracts Support Specialist, Finance Department
Department:	Finance Department		
Fiscal Year:	2012-2013	Budgeted?:	No
Contract Dates Begin & End:	05-02-12 to 12-31-12	Grant?:	No
Matching Requirement?:	No	Fund?:	New

Information

Request/Subject

Approval of Amendment No. 1 to Professional Services Agreement No. 040512 with ATL, Inc.

Background Information

On May 2, 2012, Gila County entered into a Professional Services Agreement with ATL, Inc. to provide material sampling, testing and inspection services for the Pine Creek Canyon Road Reconstruction Project. The contract was for a total amount of $35,000. The contract term was from May 2, 2012, to December 31, 2012.

Evaluation

During the project there were multiple unforeseen conditions that contributed to the additional cost of the material testing. The extensive utility relocations and lack of cooperation from utility companies caused delays and forced work sequencing to be modified. With the construction work being held up and the work not flowing together on a more even schedule, the need for frequent testing became necessary to ensure the quality of the construction. ATL was working out of Flagstaff and charging a trip charge every time they needed to be on the job, resulting in an increase in cost. Change orders due to unforeseen site conditions also contributed to the increase in the material testing budget. The total overrun on the contract is $8,403. Public Works plans on back-charging the contractor for $2,521 for the testing failures when the specifications were rejected.

The signed Change Order request from ATL in the amount of $8,403 is attached to this Agenda item as is Amendment No. 1 to the Agreement.

Conclusion

The original amount of Professional Service Agreement No. 040512 was for $35,000. Gila County Public Works would like authorization to increase the contract amount for Professional Service Agreement No. 040512, by $8,403, for a new total contract amount of $43,403, for cost overruns. If authorization is granted, an Amendment is attached to this agenda item for the Board's approval.

Recommendation

Gila County Public Works recommends the Board's approval of Amendment No. 1 to Professional Services Agreement No. 040512 with ATL, Inc., to increase the original contract amount of $35,000 by $8,403 for a final total contract amount of $43,403 for the work performed on Pine Creek Canyon Road.

Suggested Motion

Approval of Amendment No. 1 to Professional Service Agreement No. 040512 between Gila County and ATL, Inc. to increase the contract amount by $8,403 for cost overruns, for a total contract amount of $43,403 for work performed on the Pine Creek Canyon Road Reconstruction Project.

Attachments

Professional Service Agreement No 040512 with ATL Inc

ATL Inv 0033432 - Final invoice

Explanation of ATL costs exceeding contract

ATL Change Order Pine Creek Canyon

Amendment No.1 to Professional Service Agreement with ATL, Inc.

Tommie C. Martin, District I
P.O. Box 2297 Payson, AZ. 85547
(928) 474-2029

Michael A. Pastor, District II
1400 E. Ash St. Globe, AZ. 85501
(928) 425-3231 Ext. 8753

Shirley L. Dawson, District III
1400 E. Ash St. Globe, AZ. 85501
(928) 425-3231 Ext. 8511

GILA COUNTY
www.gilacountyaz.gov

Don E. McDaniel Jr., County Manager
Phone (928) 425-3231 Ext.8761

Joseph T. Heatherly, Finance Director
Phone (928) 425-3231 Ext. 8743

FAX (928) 425-0319
TTY: 7-1-1

PROFESSIONAL SERVICE AGREEMENT NO. 040512

PINE CREEK CANYON ROAD RECONSTRUCTION PROJECT
MATERIAL SAMPLING, TESTING AND INSPECTION

THIS AGREEMENT, made and entered into this 2nd day of May, 2012, by and between Gila County a political subdivision of the State of Arizona, hereinafter designated the County, and **ATL, INC.**, of the City of Phoenix, State of Arizona, hereinafter designated the Contractor.

WITNESSETH: The Contractor, for and in consideration of the sum to be paid him by the County, in the manner and at the time hereinafter provided, and of the other covenants and agreement's herein contained, hereby agrees, for himself, his heirs, administrators, successors, and assigns as follows:

ARTICLE 1 – SCOPE OF SERVICES: The Contractor shall provide for the complete provision in the scope of work below of the construction material testing for the Pine Creek Canyon Road Reconstruction Project in a good and workmanlike and substantial manner and to the satisfaction of the County under the direction of the Public Works Project Manager or designee.

The Contractor will provide material sampling, testing and inspection services in accordance with the project roadway improvement plans and specifications stated and as referenced within the bid documentations of the project for the road reconstruction only. The waterline construction testing is not included in this agreement. The scope of service will include:

- Contractor review of project plans and specifications.
- Material sampling, testing and inspection including all necessary documentation and results submitted by the Contractor to the County with appropriate certifications.
- Contractor coordination of material sampling schedule with the County.
- The County shall pay for the initial testing of material. If a test fails retesting will be at the expense of the general contractor.

Additional Information:

- Contractor is an AASHTO Accredited Laboratory
- Contractor is certified as an MBE/DBE/SBE with city, county, and state agencies to provide construction management, construction specialty inspections, construction materials testing, and geotechnical engineering services.
- Contractor's Phoenix/Globe laboratory will be utilized for this project.

CONTRACTOR FEES

The Contractor's fees for construction materials testing services will be based upon applicable unit prices. See attached Exhibit "A" by mention made a binding part of this agreement as set forth herein.

ARTICLE 2 – TERMINATION: The County reserves the right to terminate the Contract, in whole or in part at any time, when in the best interest of the County, without penalty or recourse. Upon receipt of the written notice, the Contractor shall stop all work as directed in the notice. If the contract is terminated, the County shall be liable only for the services rendered under this contract and accepted material received by the County before the effective date of termination.

ARTICLE 3 - INDEMNIFICATION: Contractor shall indemnify, defend, save and hold harmless the County of Gila and its officers, officials, agents, and employees (hereinafter referred to as "Indemnitee") from and against any and all claims, actions, liabilities, damages, losses, or expenses (including court costs, attorneys' fees, and costs of claim processing, investigation and litigation) (hereinafter referred to as "Claims") for bodily injury or personal injury (including death), or loss or damage to tangible or intangible property caused, or alleged to be caused, in whole or in part, by the negligent or willful acts or omissions of Contractor or any of its owners, officers, directors, agents, employees or subcontractors. This indemnity includes any claim or amount arising out of or recovered under the Workers' Compensation Law or arising out of the failure of such contractor to conform to any federal, state or local law, statute, ordinance, rule, regulation or court decree. It is the specific intention of the parties that the Indemnitee shall, in all instances, except for Claims arising solely from the negligent or willful acts or omissions of the Indemnitee, be indemnified by Contractor from and against any and all claims. It is agreed that Contractor will be responsible for primary loss investigation, defense and judgment costs where this indemnification is applicable. In consideration of the award of this contract, the Contractor agrees to waive all rights of subrogation against the County, its officers, officials, agents and employees for losses arising from the work performed by the Contractor for the County.

ARTICLE 4 – INSURANCE REQUIREMENTS: Contractor and subcontractors shall procure and maintain until all of their obligations have been discharged, including any warranty periods under this Contract are satisfied, insurance against claims for injury to persons or damage to property which may arise from or in connection with the performance of the work hereunder by the Contractor, his agents, representatives, employees or subcontractors.

The insurance requirements herein are minimum requirements for this Contract and in no way limit the indemnity covenants contained in this Contract. The County in no way warrants that the minimum limits contained herein are sufficient to protect the Contractor from liabilities that might arise out of the performance of the work under this contract by the Contractor, his agents, representatives, employees or subcontractors and Contractor is free to purchase additional insurance as may be determined necessary.

A. **MINIMUM SCOPE AND LIMITS OF INSURANCE:** Contractor shall provide coverage with limits of liability not less than those stated below.

1. **Commercial General Liability – Occurrence Form**
   Policy shall include bodily injury, property damage and broad form contractual liability coverage.
   - General Aggregate $2,000,000
   - Products – Completed Operations Aggregate $1,000,000
   - Personal and Advertising Injury $1,000,000
   - Each Occurrence $1,000,000

   a. The policy shall be endorsed to include the following additional insured language: **"The County of Gila shall be named as an additional insured with respect to liability arising out of the activities performed by, or on behalf of the Contractor".**

2. **Worker's Compensation and Employers' Liability**

Workers' Compensation	Statutory
Employers' Liability	
Each Accident	$100,000
Disease – Each Employee	$100,000

Disease – Policy Limit $500,000

a. Policy shall contain a **waiver of subrogation** against the County of Gila.

B. **ADDITIONAL INSURANCE REQUIREMENTS:** The policies shall include, or be endorsed to include, the following provisions:

1. On insurance policies where the County of Gila is named as an additional insured, the County of Gila shall be an additional insured to the full limits of liability purchased by the Contractor even if those limits of liability are in excess of those required by this Contract.
2. The Contractor's insurance coverage shall be primary insurance and non-contributory with respect to all other available sources.
3. Coverage provided by the Contractor shall not be limited to the liability assumed under the indemnification provisions of this Contract.

C. **NOTICE OF CANCELLATION:** Each insurance policy required by the insurance provisions of this Contract shall provide the required coverage and shall not be suspended, voided, canceled, reduced in coverage or endorsed to lower limits except after thirty (30) days prior written notice has been given to the County. Such notice shall be sent directly to **Gila County Purchasing, 1400 E. Ash St., Globe, AZ, 85501** and shall be sent by certified mail, return receipt requested.

D. **ACCEPTABILITY OF INSURERS:** Insurance is to be placed with insurers duly licensed or approved unlicensed companies in the state of Arizona and with an "A.M. Best" rating of not less than B+ VI. The County in no way warrants that the above-required minimum insurer rating is sufficient to protect the Contractor from potential insurer insolvency.

E. **VERIFICATION OF COVERAGE:** Contractor shall furnish the County with certificates of insurance (ACORD form or equivalent approved by the County) as required by this Contract. The certificates for each insurance policy are to be signed by a person authorized by that insurer to bind coverage on its behalf.

All certificates and endorsements are to be received and approved by the County before work commences. Each insurance policy required by this Contract must be in effect at or prior to commencement of work under this Contract and remain in effect for the duration of the project. Failure to maintain the insurance policies as required by this Contract or to provide evidence of renewal is a material breach of contract.

All certificates required by this Contract shall be sent directly to **Gila County Purchasing, 1400 E. Ash St., Globe, AZ, 85501**. The County project/contract number and project description shall be noted on the certificate of insurance. The County reserves the right to require complete, certified copies of all insurance policies required by this Contract at any time.

F. **SUBCONTRACTORS:** Contractors' certificate(s) shall include all subcontractors as additional insured's under its policies **or** Contractor shall furnish to the County separate certificates and endorsements for each subcontractor. All coverage's for subcontractors shall be subject to the minimum requirements identified above.

G. **APPROVAL:** Any modification or variation from the insurance requirements in this Contract shall be made by the County Attorney, whose decision shall be final. Such action will not require a formal Contract amendment, but may be made by administrative action.

ARTICLE 5 – LEGAL ARIZONA WORKERS ACT COMPLIANCE: Contractor hereby warrants that it will at all times during the term of this Contract comply with all federal immigration laws applicable to Contractor's employment of its employees, and with the requirements of A.R.S. § 23-214 (A) (together the "State and Federal Immigration Laws"). Contractor shall further ensure that each subcontractor who

performs any work for Contractor under this contract likewise complies with the State and Federal Immigration Laws. County shall have the right at any time to inspect the books and records of Contractor and any subcontractor in order to verify such party's compliance with the State and Federal Immigration Laws.

Any breach of Contractor's or any subcontractor's warranty of compliance with the State and Federal Immigration Laws, or of any other provision of this section, shall be deemed to be a material breach of this Contract subjecting Contractor to penalties up to and including suspension or termination of this Contract. If the breach is by a subcontractor, and the subcontract is suspended or terminated as a result, Contractor shall be required to take such steps as may be necessary to either self-perform the services that would have been provided under the subcontract or retain a replacement subcontractor as soon as possible so as not to delay project completion.

Contractor shall advise each subcontractor of County's rights, and the subcontractor's obligations, under this Article by including a provision in each subcontract substantially in the following form: "Subcontractor hereby warrants that it will at all times during the term of this contract comply with all federal immigration laws applicable to Subcontractor's employees, and with the requirements of A.R.S. § 23-214 (A). Subcontractor further agrees that County may inspect the Subcontractor's books and records to insure that Subcontractor is in compliance with these requirements. Any breach of this paragraph by Subcontractor will be deemed to be a material breach of this contract subjecting Subcontractor to penalties up to and including suspension or termination of this contract."

Any additional costs attributable directly or indirectly to remedial action under this Article shall be the responsibility of Contractor. In the event that remedial action under this Article results in delay to one or more tasks on the critical path of Contractor's approved construction or critical milestones schedule, such period of delay shall be deemed excusable delay for which Contractor shall be entitled to an extension of time, but not costs.

ARTICLE 6 – LAWS AND ORDINANCES: This agreement shall be enforced under the laws of the State of Arizona. Contractor shall maintain in current status all Federal, State and Local licenses and permits required for the operation of the business conducted by the Contractor. The Contractor shall comply with the applicable provisions of the Americans with Disabilities Act (Public Law 101-336, 42 U.S.C. 12101-12213) and applicable federal regulations under the Act.

ARTICLE 7– ANTI-TERRORISM WARRANTY: Pursuant to A.R.S. § 35-393.06(B) and 35-301.06(A) the Contractor certifies that it does not have scrutinized business operations in Iran or Sudan and that they are in compliance with the Export Administration Act and not on the Excluded Parties List.

ARTICLE 8 – CANCELLATION: This agreement is subject to cancellation pursuant to A.R.S. §38-511. If the Agreement is terminated, the county shall be liable only for payment for services rendered and accepted material received by the County before the effective date of termination.

ARTICLE 9 – RELATIONSHIP OF THE PARTIES: Contractor is an independent contractor of the County. Contractor represents that he has or will secure, at his own expense, all personnel required in performing the services under this contract. Such personnel shall not be employees of or have any contractual relationship with the County. All personnel engaged in work under this contract shall be fully qualified and shall be authorized or permitted under State and local law to perform such services. Contractor warrants that he has obtained or will obtain Worker's Compensation Insurance for his employees working on this contract and that any subcontractors will likewise obtain Worker's Compensation Insurance for of their employees working on this contract. It is further agreed by Contractor that he shall obey all state and federal statutes, rules, and regulations which are applicable to

provisions of the services called for herein. Neither Contractor nor any employee of the Contractor shall be deemed an officer, employee, or agent of the County.

ARTICLE 10 – NON-APPROPRIATIONS CLAUSE: Contractor acknowledges that the County is a governmental entity, and the contract validity is based upon the availability of public funding under its authority. In the event that public funds are unavailable and not appropriated for the performance of County's obligations under this contract, then this contract shall automatically expire without penalty to County after written notice to Contractor of the unavailability and non-appropriation of public funds. It is expressly agreed that the County shall only activate this non-appropriation provision as an emergency fiscal measure. The County shall not activate this non-appropriation provision for its convenience, to circumvent the requirements of this contract, or to enable the County to contract with another Contractor for the same supplies or services covered under this Addendum.

ARTICLE 11 – ENTIRE CONTRACT CLAUSE: The Contractor and the County have read this Contract and agree to be bound by all of its terms, and further agree that it constitutes the entire contract between the two parties and may only be modified by a written mutual contract signed by the parties. No oral agreement or oral provision outside this Contract shall have any force or effect

ARTICLE 12 – NON-WAIVER OF ENFORCEABILITY: Failure of the County to enforce, at any time, any of the provisions of this Contract, or to request at any time performance by Contractor of any of the provisions hereof, shall in no way be construed to be a waiver of such provisions, nor in any way affect the validity of this contract or any part thereof, or the right of the County to enforce each and every provision

ARTICLE 13 – GOVERNING LAW: Both parties agree that this Contract shall be governed by the laws of the state of Arizona. The parties further agree that the jurisdiction for any legal disputes arising out of this Contract shall be the Superior Court of the State of Arizona. The parties agree that even if this Contract does not specifically reference any provision required by state or federal law, those state and federally required provisions are incorporated into this Contract by this reference as though they were specifically listed herein.

ARTICLE 14– TERM: The term of the agreement shall commence date signed by the County Manager and continue to December 31, 2012, unless canceled or extended as otherwise provided herein.

ARTICLE 15 – PAYMENT/BILLING: Contractor shall be paid pursuant to the attached fee schedule in Article 1 of this agreement, but in no event shall payment exceed **$35,000.00** without prior written approval from the County.

All invoices shall be submitted to Gila County Accounts Payable, 1400 E. Ash St, Globe, Arizona and include the following information:

- Purchase Order Number
- Contract Number
- Invoice Number
- Service Location
- Vendor Name and Address
- Description of Service

Any alterations to the scope of work resulting in a change in cost must have prior written approval by the County. Any unauthorized work may result in non-payment to the vendor.

Gila County employs a "Net 15" payment term for services meaning the payment will be issued fifteen (15) days from the date the County receives the invoice from the Contractor. Purchase orders sent to the Contractor reflect these terms and conditions.

The Contractor shall have a current I.R.S. W-9 form on file with the County unless not required by law. The County shall not remit payment if the Contractor does not have a current W-9.

IN WITNESS WHEREOF, *Professional Service Agreement No. 040512 has been duly executed by the parties hereinabove named, on the date and year first above written.*

GILA COUNTY

Don E. McDaniel Jr., County Manager

Date: 5/1/12

ATL, INC.

Signature

Frank Rivera, CEO

Print Name

Date: 4/26/12

APPROVED AS TO FORM

Bryan B. Chambers, Chief Deputy County Attorney

EXHIBIT "A"

ATL, INC.
Excellence In Quality

ATL, Inc.

Gila County Pine Creek Canyon Rd Reconstruction Project No. 040512

Field	Rates
Principal (Hourly)	$ 125.00
Registered Engineer (Hourly)	$ 105.00
Project Manager (Hourly)	$ 90.00
Staff Engineer (Hourly)	$ 74.00
QC Supervisor/Steel Inspection Supervisor (Hourly)	$ 80.00
Construction Technician II (Hourly)	$ 46.00
Construction Technician III (Hourly)	$ 55.00
Construction Inspector – (Hourly)	$ 62.00
Lead Technician (Hourly)	$ 59.00
Steel Inspector – UT/MT/Skidmore (Hourly)	$ 65.00
Clerical (Hourly)	$ 38.00
Trip Charge (Local)	$ 75.00
Overtime (Hourly)	1.35 X ST

LABORATORY CONCRETE

Concrete Cores (Each) (Compressive Strength-includes Saw-Cut ASTM C-42, C-39)	$ 24.00

Concrete Mix Design (Trial Batch Method)	$ 1,100.00
Concrete Mix Design (Review)	$ 625.00
Soil – Cement Mix Design (Each) (3 Cement Contents Only – ASTM D-2901)	$ 1,000.00
Concrete Cylinders (Each) (Compressive Strength – ASTM C-39)	$ 13.00
Concrete Cylinders – Hold (Each) (Compressive Strength)	$ 6.00
Flexural Beam Testing – Break Only (Each) (ASTM C-31)	$ 25.00
Grout & Mortar Cube (Each) (Compressive Strength – ASTM C-109)	$ 18.00
Masonry Prisms - Ungrouted (Each) (Compressive Strength – 8" x 16" x 16" – ASTM C-140)	$ 58.00
Masonry Prisms - Grouted (Each) (Compressive Strength – 8" x 16" x 16" – ASTM C-140)	$ 70.00
Masonry Prisms - Ungrouted (Each) (Compressive Strength – 12" x 16" x 16" – ASTM C-140)	$ 105.00
Masonry Prisms - Grouted (Each) (Compressive Strength – 12" x 16" x 16" – ASTM C-140)	$ 20.00

AGGREGATE / SOIL

Sieve Analysis (Each) (Washed - ASTM C-136)	$ 52.00
Sieve Analysis, Clayey Material (Each) (Washed – ASTM C-136)	$ 100.00
200 Sieve Analysis (Each)	$ 65.00
Aggregate Unit Weight (Each) (Rodded Weight - ASTM C-29)	$ 45.00

Specific Gravities / Absorption – Coarse (Each) (ASTM C-127)	$ 55.00
Specific Gravities / Absorption – Fine (Each) (ASTM C-123)	$ 70.00
Sand Equivalent Test (Each) (ASTM D-2419)	$ 75.00
Plasticity Index (Each) (ASTM D-424)	$ 50.00
Liquid Limits (Each) (ASTM D-423)	$ 55.00
Standard Proctor (Each) (ASTM D-698)	$ 100.00
Modified Proctor (Each) (ASTM D-1557)	$ 125.00
Uncompacted Voids of Fine Aggregate (Each) (Without Specific Gravity – TP-33)	$ 85.00
Flat and Elongated Particles (Each) (ASTM D-4791)	$ 85.00
Flakiness Index (Each)	$ 70.00
LA Abrasion (Each) (ASTM C-131)	$ 120.00

AGGREGATE / SOIL

Fractured Faces (Each) (ARIZ 212-D)	$ 65.00
Sodium/Sulfate Soundness (per screen) (ASTM C-88)	$ 45.00
Hydrometer Analysis (Each) (ASTM D-422)	$ 115.00
Clay Lumps / Friable Faces (Each) (Coarse or Fine - ASTM C-142)	$ 100.00

Consolidation (Each) (Loading in increments w/two rebounds – ASTM D-2435)	$ 175.00
Swell / Collapse (Each)	$ 70.00
Aggregate Durability Test (Each) (Coarse)	$ 115.00
Aggregate Durability Test (Each) (Fine)	$ 95.00
In – Situ Moisture Content (Each) (AASHTO T-220, ASTM C-566)	$ 12.00
R-Value (Set) (AASHTO T-190, ASTM D-2844)	$ 275.00
Visual Classification (Each)	$ 20.00
Splitting of Test Samples (Each)	$ 35.00
Permeability (Each)	$ 145.00
Percolation Test (Each)	$ 1,775.00

ASPHALT

Mix Design, 4 Points (Each)	$ 1,300.00
Superpave Mix Design	$ 4,200.00
Lab Mixing & Compacting for Marshall Plugs (Hourly) (ASTM D-1559)	$ 64.00
Marshall Stability & Flow (Set of 3) (ASTM D-1559)	$ 90.00
Marshall Density Tests (Set of 3) (ASTM D-1186)	$ 90.00
Immersion Compression (Set of 6)	$ 280.00
Max. Theoretical Specific Gravity (Each) (ASTM D-2041)	$ 55.00

Field Core Density/Thickness (Each) (NEV T-366A)	$ 22.00
Bitumen/Grading (Each) (ASTM D-136)	$ 110.00
Viscosity Kinemetic (Each)	$ 95.00
Thin Film Oven Test (Each)	$ 115.00
Compact Marshall Plugs (Set of 3)	$ 65.00
Oil Solubility in TCE (Each)	$ 58.00
Flash Point, Clev or Tag (Each)	$ 90.00
Penetration (Each)	$ 50.00
Ductility (Each)	$ 70.00
Viscosity, Absolute (Each)	$ 90.00
Ignition Oven – Asphalt Cement Content (Each)	$ 80.00
Ignition Oven - Gradation (Each)	$ 85.00
Ignition Oven - Calibration (Each)	$ 300.00
Moisture Determination (Each)	$ 30.00
Marshall Compaction, Unit Weight, Stability, & Flow (Each)	$ 115.00
Gyratory Compaction, Unit Weight (Each)	$ 30.00
Rice Test (Each)	$ 57.00
Bulk Specific Gravity of Compaction Cores (Each)	$ 35.00
Nuclear Gauge Determination - Calibration (Each)	$ 300.00
Nuclear Gauge Determination – Asphalt Cement Content (Each)	$ 55.00
Cold Feed Gradation (Each)	$ 85.00

ATL, INC.
Excellence In Quality

Invoice

2921 N. 30th Avenue
Phoenix, AZ 85017-5402
(602) 241-1097

December 3, 2012
Project No: 212081-00
Invoice No: 0033432

Gila County Finance Department
ATTN: Accounts Payable
1400 E Ash Street
Globe AZ 85501

Project: 212081-00 Pine Creek Canyon Rd Reconstruction

Professional Services Agreement
No. 040512

Professional services from November 3, 2012 to November 30, 2012

Professional Personnel

	Hours	Rate	Amount	
Construction Technician III (Hourly)				
Vega, Chris	29.50	55.00	1,622.50	
QC Supervisor/Steel Inspection Sup (Hour				
Rivera, Michael	9.25	80.00	740.00	
Totals	38.75		2,362.50	
Total Labor				**2,362.50**

Unit Billing

AC Ignition Bitumen & Gradation	6.00 Each @ 145.00	870.00	
Compressive Strength Of Concrete	12.00 Each @ 13.00	156.00	
Concrete/Grout Hold Cylinders	5.00 Each @ 6.00	30.00	
Core Rig	2.00 Each @ 65.00	130.00	
Core Rig Bit Wear (Per Core)	21.00 Each @ 15.00	315.00	
Field Core Density/Thickness	7.00 Each @ 22.00	154.00	
Marshall Density Tests (Set of 3)	4.00 Each @ 90.00	360.00	
Marshall Stab. & Flow	4.00 Sets @ 105.00	420.00	
Maximum Theoretical Density Of AC - Rice	4.00 Each @ 57.00	228.00	
Moisture Content Of AC	6.00 Each @ 35.00	210.00	
Nuclear Gauge	3.00 Each @ 65.00	195.00	
Plasticity Index - Dry	2.00 Each @ 50.00	100.00	
Quality Control Report	4.00 Each @ 100.00	400.00	
Sieve Analysis	4.00 Each @ 52.00	208.00	
Trip Charge (Local)	9.00 Trips @ 75.00	675.00	
Total Units		4,451.00	**4,451.00**

Total this Invoice **$6,813.50**

ATL, INC.
Excellence in Quality
O.A./O.C. ENGINEERING CONSULTANTS
GEOTECHNICAL · CIVIL · ENVIRONMENTAL

Gila County Finance Department
Attn: Accounts Payable
1400 E Ash Street
Globe, AZ 85501

Invoice Date: 11/16/2012
Invoice Number: 33409B
ATL Job Number: 212081

Project: Pine Creek Canyon Road Reconstruction
Professional Services Agreement No. 040512

Professional Services: September 29, 2012 through November 2, 2012

Balance of original ATL invoice no. 33409 applied to pending contract modification request:

Total due this invoice **$1,589.50**

ATL, INC.
Excellence In Quality

ATL Project 212081, Pine Canyon Road Reconstruction - Change order request data

Client requested additional sampling and testing not in ATL's original proposed estimate as follows:

Mike Gillette - Gila County onsite
Steve Stratton - Gila County Engineer
Chuck Williams - CL Williams (Designer)

A	Six (6) additional AC samples including field time, runner, trips and full array of AC lab testing, engineering review and QC reports
B	Four (4) additional RAP samples including field time, trips and lab testing, review and QC reports
C	One (1) additional Coldfeed Sample including field time, trip and lab testing, review and reports
D	Five (5) additional concrete breaks including field sampling, trip, lab work, hold cylinders, review and QC reports
E	Six (6) AB samples/retests and fourteen (14) field subgrade and AB density retests including field time, trips, lab work, review and QC reports

Recap:

Total billed	$43,403.00
less Contract fee	($35,000.00)
Change Order request for additional work	**$8,403.00**

Outstanding Invoices

Number	Date	Balance
0033409	11/16/12	23,239.50
Total		23,239.50

can't pay full amount
only authorized to pay $21,650

Billings to date	Current	Prior	Total
Labor	2,362.50	18,340.50	20,703.00
Unit	4,451.00	18,249.00	22,700.00
Totals	**6,813.50**	**36,589.50**	**43,403.00**

This invoice includes 2 QC reports, 5 concrete cylinder breaks, and 2 hold cylinder chargess that will occur in December 2012.

Explanation of ATL costs exceeding contract amount
Pine Creek Canyon Material Testing

The contractual dollar amount for material testing on the Pine Creek Canyon Road Project has been exceeded. Prior to the start of the Project the contract for material testing was awarded to the only responsive bidder ATL, Inc. The original contract #040512 had a maximum dollar limit of $35,000.00, the total billed amount after completion of the Project was $43,403.00; the total billed amount exceeds the original contract limit by $8,403.00.

During the course of the Project there were multiple unforeseen conditions that contributed to the overrun in the material testing budget. From the beginning of the Project extensive utility relocations and lack of cooperation from utility companies caused delays and forced work sequencing to be modified. Because of the utility issues, and in order to keep the Project moving forward, work had to be done in multiple "small" sections. With work being done in multiple small sections, as opposed to "long" sections, the need for more frequent testing became necessary to ensure the quality of the finished product. More frequent testing and the fact that ATL, Inc. was working from their Flagstaff office and charging a trip charge every time they needed to be on the job, resulted in an increase in cost.

The Contractor also had trouble getting the ABC material to meet the required specifications for field acceptance. The Contractor submitted on, and had submittal approval for, multiple types of ABC material. When the material was installed in the field and field testing was performed, some of the material failed to meet field testing specification requirements and was rejected. Each time the Contractor would use a different type of ABC material the material testing company, ATL, Inc., would have to take samples and perform laboratory testing on the material to establish a proctor. The increase in proctor sampling and laboratory testing for the ABC material contributed to the increase in cost.

Change orders due to unforeseen site conditions also contributed to the increase in the material testing budget. For each unforeseen condition a change order was issued to resolve the condition; many of those change orders had material testing fees associated with them.

The issues with utility companies, issues with the Contractor, and the unforeseen conditions encountered during this project are the primary reasons for the overrun in the material testing budget. Although the overrun in the material testing budget is unfortunate it is understandable considering the complexities of the project and the difficulties encountered.

Michael Gillette
Construction Project Engineer – Public Works Engineering
1/23/2013

ATL, INC.
Excellence In Quality

ATL Project 212081, Pine Canyon Road Reconstruction - Change order request data

Client requested additional sampling and testing not in ATL's original proposed estimate as follows:

Mike Gillette - Gila County onsite
Steve Stratton - Gila County Engineer
Chuck Williams - CL Williams (Designer)

A	Six (6) additional AC samples including field time, runner, trips and full array of AC lab testing, engineering review and QC reports
B	Four (4) additional RAP samples including field time, trips and lab testing, review and QC reports
C	One (1) additional Coldfeed Sample including field time, trip and lab testing, review and reports
D	Five (5) additional concrete breaks including field sampling, trip, lab work, hold cylinders, review and QC reports
E	Six (6) AB samples/retests and fourteen (14) field subgrade and AB density retests including field time, trips, lab work, review and QC reports

Recap:

Total billed	$43,403.00
less Contract fee	($35,000.00)
Change Order request for additional work	**$8,403.00**

Steve Stratton
Steve Stratton- Director Public Works
2-8-2013

ATL, INC.
Excellence In Quality

Invoice

2921 N. 30th Avenue
Phoenix, AZ 85017-5402
(602) 241-1097

December 3, 2012
Project No: 212081-00
Invoice No: 0033432

Gila County Finance Department
ATTN: Accounts Payable
1400 E Ash Street
Globe AZ 85501

Project: 212081-00 Pine Creek Canyon Rd Reconstruction

Professional Services Agreement
No. 040512

Professional services from November 3, 2012 to November 30, 2012

Professional Personnel

	Hours	Rate	Amount	
Construction Technician III (Hourly)				
Vega, Chris	29.50	55.00	1,622.50	
QC Supervisor/Steel Inspection Sup (Hour				
Rivera, Michael	9.25	80.00	740.00	
Totals	38.75		2,362.50	
Total Labor				**2,362.50**

Unit Billing

AC Ignition Bitumen & Gradation	6.00 Each @ 145.00	870.00	
Compressive Strength Of Concrete	12.00 Each @ 13.00	156.00	
Concrete/Grout Hold Cylinders	5.00 Each @ 6.00	30.00	
Core Rig	2.00 Each @ 65.00	130.00	
Core Rig Bit Wear (Per Core)	21.00 Each @ 15.00	315.00	
Field Core Density/Thickness	7.00 Each @ 22.00	154.00	
Marshall Density Tests (Set of 3)	4.00 Each @ 90.00	360.00	
Marshall Stab. & Flow	4.00 Sets @ 105.00	420.00	
Maximum Theoretical Density Of AC - Rice	4.00 Each @ 57.00	228.00	
Moisture Content Of AC	6.00 Each @ 35.00	210.00	
Nuclear Gauge	3.00 Each @ 65.00	195.00	
Plasticity Index - Dry	2.00 Each @ 50.00	100.00	
Quality Control Report	4.00 Each @ 100.00	400.00	
Sieve Analysis	4.00 Each @ 52.00	208.00	
Trip Charge (Local)	9.00 Trips @ 75.00	675.00	
Total Units		**4,451.00**	**4,451.00**

Total this Invoice **$6,813.50**

ATL, INC.
Excellence in Quality
O.A./Q.C. ENGINEERING CONSULTANTS
GEOTECHNICAL · CIVIL · ENVIRONMENTAL

Gila County Finance Department
Attn: Accounts Payable
1400 E Ash Street
Globe, AZ 85501

Invoice Date: 11/16/2012
Invoice Number: 33409B
ATL Job Number: 212081

Project: Pine Creek Canyon Road Reconstruction
Professional Services Agreement No. 040512

Professional Services: September 29, 2012 through November 2, 2012

Balance of original ATL invoice no. 33409 applied to pending contract modification request:

Total due this invoice **$1,589.50**

AMENDMENT NO. 1

The following amendments are hereby incorporated into the contract documents for the below stated project:

PROFESSIONAL SERVICES AGREEMENT NO. 040512
PINE CREEK CANYON ROAD RECONSTRUCTION PROJECT
MATERIAL SAMPLING, TESTING AND INSPECTION
ATL, INC.

On May 02, 2012, Gila County and ATL, Inc. entered into a professional services agreement, whereby ATL, Inc. agreed to provide materials sampling, testing and inspections for the Pine Creek Canyon Road Reconstruction Project in Pine, Arizona.

Article 15 of the agreement provides that "in no event shall payment exceed $35,000.00 without prior written approval from the County". The contract was issued for a not to exceed amount of $35,000.00. The County requested additional services from ATL that were not included in theh original agreement. Amendment No. 1 is being issued to address these additional services which resulted in cost overruns, in the amount of Eight Thousand, Four Hundred and Three dollars and no cents ($8,403.00), for the materials sampling, testing and inspection on the Pine Creek Canyon Road Reconstruction project.

The parties agree to amend Article 15 of the Agreement between the parties to provide that "in no event shall payment exceed $43,403.00 without prior written approval from the County".

All other terms and conditions of the original agreement shall remain in full force and affect during the term of the contract.

IN WITNESS WHEREOF, two (2) identical counterparts of this amendment, each which shall include original signatures and for all purposes be deemed an original thereof, have been duly executed by the parties hereinabove named, on this _____ day of _____, 2013.

GILA COUNTY

_____
Don E. McDaniel, Jr., County Manager

CONTRACTOR

ATL, INC.

_____
Authorized Signature

_____
Print Name

APPROVED AS TO FORM

Bryan B. Chambers, Deputy Attorney Principal

ARF-1680 **Consent Agenda Item 4- D**

Regular BOS Meeting

Meeting Date: 02/19/2013

Submitted For:	Joseph Heatherly, Finance Director	Submitted By:	Dana Sgroi, Contracts Support Specialist, Finance Department
Department:	Finance Department		
Fiscal Year:	2013-2014	Budgeted?:	No
Contract Dates Begin & End:	10-17-13 to 02-13-14	Grant?:	No
Matching Requirement?:	No	Fund?:	New

Information

Request/Subject

Approval of Amendment No. 1 to Contract No. 032712-1 with Visus Engineering Construction

Background Information

On September 18, 2012, Gila County entered into a contract with Visus Engineering for adding some turn lanes at Russell Road, Besich Blvd. and Hope Lane, to improve roadway safety. The contract was issued through the Formal Bid process. Gila County requested proposals for this work and signed a contract with the lowest qualified bidder, Visus Engineering Construction, Inc.

The contract amount is $720,000. Included in the $720,000 contract amount is $75,000 for Force Account Work. (See attached Visus Bid Schedule, Item No. 109). The Force Account item is to be used as a contingency item for unforeseen extra work that may be required to complete the project.

The following documents are attached to this Agenda Quick item; Gila County Request for Invitation for Bids-Russell Road Reconstruction Project-Bid Call 032712-1; Gila County Contract No. 032712-1; Visus Bid Schedule with the unit prices that the project was contracted off of; a Cost Overrun and Underrun Explanation; a copy of executed Change Orders #1 through #10; CLW Memo regarding Change Order Explanation - 1; CLW Memo regarding Change Order Explanation - 2; and a copy of Amendment 1 to Contract No. 032712-1 with Visus Engineering Construction.

Evaluation

There are ten (10) change orders totaling $121,157.86 that were extras related to the project, but not included in the bid items.

Change Order #1 was for New 4" PVC fiber optic conduits requested by Gila County- $17,666.97
Change Order #2 was for New waterline changes requested by Arizona Water Company - $19,549.05
Change Order #3 was for Lowering of a 1" gas sewer service which was in conflict of the new parking lot - $1,243.79
Change Order #4 was for Excavating and lowering of a 4" communication conduit, water service and relocate backflow preventor - $1,702.68
Change Order #5 was for Pothole and locate 4" communication conduit, and grade and backfill gas trench - $1,865.93
Change Order #6 was for Removal of existing concrete retaining wall located at the north end of Russell Road - $2,955.44
Change Order #7 was for Installing concrete cap over El Paso Natural Gas line - $22,137.00
Change Order #8 was to Remove an unforeseen subsurface condition, which included removal and backfilling of a cattle guard - $7,715.00
Change Order #9 was to Relocate water services from edge of roadway - $164.14
Change Order #10 was for the balance forward from Change Order #9 and final adjusted quantity overruns/underruns - $46,157.86

All but $46,157.86 of these change orders were included in the Force Account that was pre-approved in the contract. This bid was a unit price bid, not a lump sum bid. During construction the plans may not fit the actual construction so modifications have to be made. There are cost overruns and credits to the bid items totaling $46,157.86.

Attachment, entitled "Cost Overrun and Underrun Explanation" identifies the quantity overruns and underruns on some of the original bid items.

Conclusion

The original amount of Contract No. 032712-1 was for $720,000. Gila County Public Works would like authorization to increase the contract amount for Contract No. 032712-1 by $46,157.86, for a new total contract amount of $766,157.86, for cost overruns. If authorization is granted, an Amendment is attached to this agenda item for the Board's approval.

Recommendation

Gila County Public Works recommends authorization to issue an Amendment to Contract No. 032712-1 with Visus Engineering Construction, Inc., to increase the contract by $46,157.86 for a final total contract amount of $766,157.86, for the work performed on the Russell Road Reconstruction project.

Suggested Motion

Approval of Amendment No. 1 to Contract No. 032712-1 between Gila County and Visus Engineering Construction to increase the contract amount by $46,157.86 for cost overruns, for a total contract amount of $766,157.86 for work performed on the Russell Road Reconstruction Project.

Attachments

Gila County Request for Invitation for Bids-Russell Road Reconstruction Project-Bid Call 032712-1

Gila County Contract No. 032712-1

Visus-Bid Schedule

Cost Overrun and Underrun Explanation

VISUS COR #1 11-15-12

VISUS COR #2 11-15-12

VISUS COR #3 11-15-12

VISUS COR #4 11-15-12

VISUS COR #5 11-15-12

VISUS COR #6 12-14-2012

VISUS COR #7 12-14-2012

VISUS COR #8 12-14-2012

VISUS COR #9 & #10 2-12-2013

CLW Memo Regarding Change Order Explanation - 1

CLW Memo Regarding Change Order Explanation - 2

Amendment # 1 to Contract #032712-1 with Visus Engineering Construction

Legal Explanation

GILA COUNTY
REQUEST FOR INVITATION FOR BIDS

RUSSELL ROAD
RECONSTRUCTION PROJECT

BID CALL 032712-1

BIDDER'S INFORMATION
CONTRACT DOCUMENTS AND SPECIFICATIONS

BOARD OF SUPERVISORS
Tommie C. Martin, Chairman
Shirley L. Dawson, Vice Chairman
Michael A. Pastor, Member

COUNTY MANAGER
Don E. McDaniel Jr.

PUBLIC WORKS DIRECTOR
Steve Stratton

Registered Professional Engineer (Civil)
CERTIFICATE NO.
33412
JOSEPH M.
ALWIN
Date Signed 7/23/2012
ARIZONA U.S.A.
Expires 3/31/2014

JULY 2012

GILA COUNTY
REQUEST FOR INVITATION FOR BIDS

RUSSELL ROAD
RECONSTRUCTION PROJECT

GLOBE, ARIZONA

BIDDER'S INFORMATION
CONTRACT DOCUMENTS AND SPECIFICATIONS

BID NO. 032712-1

C.L. Williams Consulting, Incorporated
621 South Hillside Lane
Pinetop, Arizona 85935
(928) 367-2248

INVITATION FOR BIDS
BID CALL NO. 032712-1

Sealed bids will be received by **Gila County Procurement, 1400 East Ash St., Globe, AZ 85501,** until **11:00 A.M. Tuesday, August 28th, 2012** for the **RUSSELL ROAD RECONSTRUCTION PROJECT, GILA COUNTY, ARIZONA, BID NO. 032712-1** in strict accordance with the rules and regulations of the Gila County Procurement Code on file in the office of the Gila County Clerk of the Board, Globe, Arizona. **No bids will be accepted after 11:00 AM. The Bids will be publicly opened and read aloud at 11:00 AM, Gila County Board Hearing Room, 1400 E. Ash Street, Globe, Arizona.**

All Bids shall be made on the Invitation for Bids forms included in the Contract Documents and shall include all applicable taxes.

There is a mandatory site walk through scheduled for 10:00 A.M., Thursday, August 16th, 2012. Meeting shall be held at the Public Works Facilities Building, 725 North Rose Mofford Way, Globe, Arizona. Only those companies signed in on the walk through sign-in sheet will be permitted to bid. Plans, Specifications and Contract documents are available and may be obtained from the Purchasing Department at 1400 E. Ash Street, Globe, Arizona, Guerrero Building.

Each Bid submitted, either by hand, United States Postal Service, or other carrier, shall be sealed and plainly marked **"RUSSELL ROAD RECONSTRUCTION PROJECT, GILA COUNTY, ARIZONA BID CALL NO. 032712-1".** All Bids shall be mailed or delivered to the **Gila County Procurement, 1400 East Ash St., Globe, AZ 85501**. Gila County Procurement and Board of Supervisors of Gila County will not be responsible for those bids submitted that are not marked appropriately and/or sent to the wrong address. Prevailing clock shall be the atomic clock in the Purchasing office.

Contractors are invited to be present at the opening of bids but absence will not be considered cause for disqualification.

Contractors shall be responsible for any licenses or permits required by the regulatory agency of the State of Arizona that apply to the performance of this contract.

After the Contractor who is determined to be most Advantageous to the county has been selected through the source selection process, negotiations may be conducted for the purpose of developing a recommended Contract for Award.

The Gila County Board of Supervisors reserves the right to reject any or all bids, or to accept any bids, or to waive any informality in any bid, or to withhold the award if deemed in the best interest of Gila County.

Dates advertised in Arizona Silver Belt: August 8nd, & 15th, 2012

Signed: _____ Date: 8/7/12
Bryan B. Chambers, Chief Deputy County Attorney
***for* Daisy Flores, County Attorney**

Signed: _____ Date: 8/7/12
Tommie C. Martin, Chairman, Board of Supervisors

SECTION 0I

INVITATION FOR BIDS

IFB-1

TABLE OF CONTENTS

GENERAL PROVISIONS

SECTION 01 1
NOTIFICATION TO BIDDERS 1

SECTION 10 3
DEFINITION OF TERMS 3

SECTION 20 9
PROPOSAL REQUIREMENTS AND CONDITIONS 9
20-03 CONTENTS OF PROPOSAL FORMS 9
20-04 ISSUANCE OF PROPOSAL FORMS 9
20-05 INTERPRETATION OF ESTIMATED PROPOSAL QUANTITIES 9
20-06 EXAMINATION OF PLANS, SPECIFICATIONS, AND SITE 9
20-07 PREPARATION OF PROPOSAL 10
20-08 IRREGULAR PROPOSALS 10
20-09 PROPOSAL GUARANTY 11
20-10 DELIVERY OF PROPOSAL 11
20-11 WITHDRAWAL OR REVISION OF PROPOSALS 11
20-12 PUBLIC OPENING OF PROPOSALS 11
20-13 DISQUALIFICATION OF BIDDERS 11
20-14 PROTESTS 12

SECTION 30 13
AWARD AND EXECUTION OF CONTRACT 13
30-01 CONSIDERATION OF PROPOSALS 13
30-02 AWARD OF CONTRACT 13
30-03 CANCELLATION OF AWARD 13
30-04 RETURN OF PROPOSAL GUARANTY 13
30-05 REQUIREMENTS OF CONTRACT BONDS 14
30-06 EXECUTION OF CONTRACT 14
30-07 APPROVAL OF CONTRACT 14
30-08 FAILURE TO EXECUTE CONTRACT 14
30-09 DISPUTE & RESOLUTION. 14

SECTION 40 16
SCOPE OF WORK 16
40-01 INTENT OF CONTRACT 16
40-02 ALTERATION OF WORK AND QUANTITIES 16
40-03 OMITTED ITEMS 16
40-04 EXTRA WORK 17
40-05 MAINTENANCE OF TRAFFIC 17
40-06 RIGHTS IN AND USE OF MATERIALS FOUND IN THE WORK 18
40-07 FINAL CLEANING UP 19

SECTION 50 ..... **20**
CONTROL OF WORK **20**
50-01 AUTHORITY OF THE OWNER'S ENGINEER 20
50-02 CONFORMITY WITH PLANS AND SPECIFICATIONS 20
50-03 COORDINATION OF CONTRACT, PLANS AND SPECIFICATIONS 21
50-04 COOPERATION OF CONTRACTOR 21
50-05 COOPERATION BETWEEN CONTRACTORS 21
50-06 CONSTRUCTION LAYOUT AND STAKES 22
50-07 AUTOMATICALLY CONTROLLED EQUIPMENT 22
50-08 AUTHORITY AND DUTIES OF INSPECTORS 22
50-09 INSPECTION OF THE WORK 22
50-10 REMOVAL OF UNACCEPTABLE AND UNAUTHORIZED WORK 23
50-11 LOAD RESTRICTIONS 24
50-12 MAINTENANCE DURING CONSTRUCTION 24
50-13 FAILURE TO MAINTAIN THE WORK 24
50-14 PARTIAL ACCEPTANCE 25
50-15 FINAL ACCEPTANCE 25
50-17 GUARANTEE OF WORK (ADDITIONAL) 26
50-18 CONSTRUCTION SCHEDULE 26
50-19 NEGOTIATIONS WITH INDIVIDUAL CONTRACTORS 26

SECTION 60 ..... **28**
CONTROL OF MATERIAL **28**
60-01 SOURCE OF SUPPLY AND QUALITY REQUIREMENTS 28
60-02 SAMPLES, TESTS, AND CITED SPECIFICATIONS 28
60-03 CERTIFICATION OF COMPLIANCE 29
60-04 PLANT INSPECTION 29
60-05 OWNER'S FIELD OFFICE AND LABORATORY 30
60-06 STORAGE OF MATERIALS 30
60-07 UNACCEPTABLE MATERIALS 30
60-08 OWNER-FURNISHED MATERIALS 30

SECTION 70 ..... **32**
LEGAL RELATIONS AND RESPONSIBILITY TO PUBLIC **32**
70-01 LAWS TO BE OBSERVED 32
70-02 PERMITS, LICENSES, AND TAXES 32
70-03 PATENTED DEVICES, MATERIALS, AND PROCESSES 32
70-04 RESTORATION OF SURFACES DISTURBED BY OTHERS 32
70-05 SANITARY, HEALTH, AND SAFETY PROVISIONS 33
70-06 PUBLIC CONVENIENCE AND SAFETY 34
70-07 BARRICADES, WARNING SIGNS AND HAZARD MARKINGS 34
70-08 PROTECTION AND RESTORATION OF PROPERTY AND LANDSCAPE 34
70-09 RESPONSIBILITY FOR DAMAGE CLAIMS 35
70-10 CONTRACTOR'S INSURANCE 35
70-11 THIRD PARTY BENEFICIARY CLAUSE 36
70-12 OPENING SECTIONS OF THE WORK TO TRAFFIC 36

70-13 CONTRACTOR'S RESPONSIBILITY FOR WORK 36
70-14 CONTRACTOR'S RESPONSIBILITY FOR UTILITY SERVICE AND FACILITIES OF OTHERS 37
70-15 FURNISHING RIGHTS-OF-WAY 38
70-16 PERSONAL LIABILITY OF PUBLIC OFFICIALS 38
70-17 NO WAIVER OF LEGAL RIGHTS 38
70-18 ENVIRONMENTAL PROTECTION 39

SECTION 80 40
PROSECUTION AND PROGRESS 40
80-01 SUBLETTING OF CONTRACT 40
80-02 NOTICE TO PROCEED 40
80-03 PROSECUTION AND PROGRESS 41
80-04 CONSTRUCTION LIMITS 41
80-05 CHARACTER OF WORKERS, METHODS AND EQUIPMENT 41
80-06 TEMPORARY SUSPENSION OF THE WORK 42
80-07 DETERMINATION AND EXTENSION OF CONTRACT TIME 43
80-08 FAILURE TO COMPLETE ON TIME 44
80-09 DEFAULT AND TERMINATION OF CONTRACT 45
80-10 TERMINATION FOR NATIONAL EMERGENCIES 46

SECTION 90 47
MEASUREMENT AND PAYMENT 47
90-01 MEASUREMENT OF QUANTITIES 47
90-02 SCOPE OF PAYMENT 50
90-03 COMPENSATION FOR ALTERED QUANTITIES 50
90-04 PAYMENT FOR OMITTED ITEMS 50
90-05 PAYMENT FOR EXTRA AND FORCE ACCOUNT WORK 51
90-06 ACCEPTANCE AND FINAL PAYMENT 52

SPECIAL PROVISIONS

PROPOSED WORK SP-1
GENERAL REQUIREMENTS SP-1
POINTS AND INSTRUCTION AND AS-BUILTS SP-1
CONSTRUCTION LIMITS SP-2
OPERATION AND TRAFFIC CONTROL PLANS SP-3
QUALITY CONTROL PLAN SP-3
SAMPLING AND TESTING SP-3
MEASUREMENT AND PAYMENT SP-4
HAUL ROUTE SP-5
DUST CONTROL SP-5
TEMPORARY CONSTRUCTION EASEMENTS SP-5
OWNER'S FIELD OFFICE SP-6
BLASTING NOTIFICATION SP-6
CONFLICTING UTILITY SYSTEMS SP-6

DISPOSAL OF REMOVED VEGETATION OR UNSUITABLE MATERIALS SP-6
ARIZONA PUBLIC SERVICE SP-7

TECHNICAL SPECIFICATIONS

201-CLEARING AND GRUBBING T-1
202-REMOVAL OF STRUCTURES AND OBSTRUCTIONS T-1
203-EARTH WORK T-2
209-FURNISH WATER SUPPLY T-2
211-FILL CONSTRUCTION T-2
301-SUBGRADE PREPARATION T-2
303-AGGREGATE SUBBASES AND AGGREGATE BASES T-3
321-ASPHALTIC CONCRETE PAVEMENT T-3
340-CONCRETE CURB, GUTTER, SIDEWALK, SIDEWALK RAMPS, DRIVEWAY AND ALLEY ENTRANCE T-5
411-ASPHALTIC CONCRETE FRICITION COURSE.....T-5
520-STEEL AND ALUMINUM HANDRAILS T-5
525-PNUEMATICALLY PLACED MORTAR T-5
607-ROADSIDE SIGN SUPPORTS T-6
608-SIGN PANELS T-6
621-CORRUGATED METAL PIPE AND ARCHES T-7
701-MAINTENANCE AND PROTECTION OF TRAFFIC T-7
708-PAINTED PAVEMENT MARKINGS T-7
760-COATING CORRUGATED METAL PIPE AND ARCHES T-7
810-EROSION CONTROL AND POLLUTION PREVENTION (SWPPP) T-8
901-MOBILIZATION T-9
902-CHAIN LINK FENCE.....T-9
909-SURVEY MARKER.....T-9
913-BANK PROTECTION T-9
914-WALLS AND MISCELLANEOUS STRUCTURES T-9
924-CONTRACTOR QUALITY CONTROL T-10
925-CONSTRUCTION SURVEYING AND LAYOUT AND AS-BUILT DRAWINGS T-11

CONTRACT FORMS

PROPOSAL P-1
BIDDING SCHEDULE BS-1
SURETY (BID) BOND BB-1
QUALIFICATION AND CERTIFICATION QC-1
REFERENCE LIST RL-1
AFFIDAVIT OF NON-COLLUSION ANC-1
SUBCONTRACTOR CERTIFICATION SC-1
CHECKLIST AND ADDENDA ACKNOWLEDGMENT CK-1
CONTRACT C-1
CONTRACT PERFORMANCE BOND CPB-1
LABOR AND MATERIALS BOND LMB-1
CONTRACT PERFORMANCE WARRANTY CWP-1
IRS W-9 FORM W-9

GENERAL PROVISIONS
Bid No. 032712-1

SECTION 01

NOTIFICATION TO BIDDERS

BIDDERS ARE HEREBY NOTIFIED:

1. The bidder must supply all the information required by the bidding documents or specifications. All proposals shall be made on the bid proposal forms prepared by Gila County as part of the Contract Documents. The proposal must include the following forms, **all with original signatures**, must accompany the bidders proposal:

   - Bid Proposal (pages P-1 to P-3)
   - Qualification & Certification Form (pages QC-1 to QC-2)
   - Reference List (RL1)
   - Bid Schedule (pages BS-1 to BS-6)
   - Surety (Bid) Bond (page BB-1)
   - Affidavit of Non-Collusion (page ANC-1)
   - Subcontracting Certification (page SC-1)
   - Check List & Addenda Acknowledgment (CK-1)
   - Contract (C1-C7)
   - IRS W-9 Form (W-9)

   Failure to include all required documents, all with original signatures, may invalidate the bid. Prices shall include all applicable taxes.

2. **Proposal Guaranty** -Proposals shall be accompanied by a certified check, cashier's check or bid bond for 10 percent (10%) of the total contract price bid.

3. **Delivery of Proposal** - Each bid shall be sealed and plainly marked **"Bid No. 032712-1 RUSSELL ROAD RECONSTRUCTION PROJECT"**, along with the **Offerors Name**, on the outer most envelope or label. If courier is used, bidder shall instruct the courier to deliver the package by **Tuesday, August 28th, 2012, 11:00 a.m.** on the date specified herein, to Gila County Procurement, Guerrero Complex, 1400 East Ash, Globe, Arizona 85501.

   Late proposals shall not be considered. Globe is considered a "rural" area by many express delivery carriers and thus, they do not guarantee priority delivery (next day). Offerors are encouraged to keep this in mind when arranging delivery of their proposals and are advised herein that late proposals shall be rejected and returned to the bidder regardless of reason for being late.

4. **Rejection of Bids** -The Owner reserves the right to reject any and all bids, waive all or any informalities in the bids.

5. **Plans and Specifications** -Plans, specifications and all other documents required by bidders may be obtained at the address shown below. **There will be a $10 non-refundable charge for the bid documents which will be provided to the requestor on a compact disc (CD).**

Gila County
Purchasing Department
Guerrero Building
1400 E. Ash Street, Globe, Arizona 85501

6. **Arizona Contractor's License** -**Prior to submission of bids**, bidders must have a valid Arizona Contractor's License of a type which meets all criteria and requirements to perform the work as specified in the contract documents in accordance with the **Arizona State Registrar of Contractors.**

7. **Bid Opening Information** - Information regarding the bid award will not be available until after the Gila County Board of Supervisors has issued a decision regarding the submitted project bids. This will be the only time, until bid award, this information will be revealed.

8. **Mandatory Pre-Bid Walk Through**
There is a mandatory site walk through scheduled for **10:00 A.M., Thursday, August 16th, 2012**. Meeting shall be held at the Public Works Facilities Building, 725 North Rose Mofford Way, Globe, Arizona. Only those companies signed in on the walk through sign-in sheet will be permitted to bid.

9. **Request for Clarifications**
Requests for clarification shall be made to Ms. Valrie Bejarano (vbejarano@co.gila.az.us) in writing (phone: 928-402-8612) submitted no later than **Monday, August 20th, 2012, 10:00 a.m.** A response will be issued to all plan holders no later than **Tuesday, August 21st, 2012 by 3:00 p.m.**

GENERAL PROVISIONS

SECTION 10

DEFINITION OF TERMS

Whenever the following terms are used in these specifications, in the contract, in any documents or other instruments pertaining to construction where these specifications govern, the intent and meaning shall be interpreted as follows:

10-00 M.A.G. Uniform Standard Specifications for Public Works Construction (Latest Edition and Revisions). Maricopa Association of Governments.

10-01 ACCESS ROAD. The right-of-way, the roadway and all improvements constructed thereon.

10-02 ADOT. Arizona Department of Transportation

10-03 ADOT STANDARD SPECIFICATIONS. "Arizona Department of Transportation Standard Specifications for Road and Bridge Construction, Revised Edition 2000", and all revisions.

10-04 ADVERTISEMENT. A public announcement, as required by local law, inviting bids for work to be performed and materials to be furnished.

10-05 ASTM. The American Society for Testing and Materials.

10-05a AASHTO. The American Association of State Highway and Transportation Officials.

10-06 AWARD. The acceptance, by the Owner, of the successful bidder's proposal.

10-07 BIDDER. Any individual, partnership, firm, or corporation, acting directly or through a duly authorized representative, who submits a proposal for the work contemplated.

10-08 BUILDING AREA. An area to be used, considered, or intended to be used for a building or other facilities or rights-of-way together with all buildings and facilities located thereon.

10-09 CALENDAR DAY. Every day shown on the calendar.

10-09a CERTIFIED FLAGGER. An individual who has been trained and certified by the Arizona Department of Transportation, an Arizona County or Municipal agency, the Federal Highway Administration, or the Highway agency of another state, to control traffic in a construction zone. Individuals certified outside Arizona must also exhibit familiarity with Arizona laws.

10-10 CHANGE ORDER. A written order by the Engineer or Owner to the Contractor covering changes in the plans, specifications, or proposal quantities and establishing the basis of payment and contract time adjustment, if any, for the work affected by such changes. The work, covered by a change order, shall be within the scope of the contract.

10-11 CONTRACT. The written agreement covering the work to be performed. The awarded contract shall include, but is not limited to: the Advertisement; the Contract form; the Proposal; the Performance Bond; the Payment Bond; any required insurance certificates; the Specifications; the Plans; and any addenda issued to bidders.

10-12 CONTRACT ITEM (PAY ITEM). A specific unit of work for which a price is provided in the contract. All pay items on this contract will be measured in English units.

10-13 CONTRACT TIME. The number of calendar days or working days, stated in the proposal, allowed for completion of the contract, including authorized time extensions. If a calendar date of completion is stated in the proposal, in lieu of a number of calendar or working days, the contract shall be completed by that date.

10-14 CONTRACTOR. The individual, partnership, firm, or corporation primarily liable for the acceptable performance of the work contracted and for the payment of all legal debts pertaining to the work who acts directly or through lawful agents or employees to complete the contract work.

10-15 CONTRACTOR'S ENGINEER. The Arizona Registered Professional Civil Engineer, individual, partnership, firm, or corporation, duly authorized by Contractor to be responsible for engineering supervision, quality control and certification of the Contract work.

10-15a DEPARTMENT. The term Department in the ADOT Standard Specifications and supplements references the Arizona Department of Transportation. Department shall reference OWNER for this contract work.

10-16 ENGINEER. See OWNER.

10-17 EQUIPMENT. All machinery, together with the necessary fuel and supplies for upkeep and maintenance including, but not limited to, all tools and apparatus necessary for the proper construction and acceptable completion of the work.

10-18 EXTRA WORK. An item of work not provided for in the awarded contract as previously modified by change order or supplemental agreement, but which is found by the Owner's Engineer to be necessary to complete the work within the intended scope of the contract as previously modified.

10-19 INSPECTOR. An authorized representative of the Owner's Engineer assigned to make all necessary quality assurance inspections and/or tests of the work performed or being performed, or of the materials furnished or being furnished by the Contractor.

10-20 INTENTION OF TERMS. Whenever, in these specifications or on the plans, the words "directed," "required," "permitted," "ordered," "designated," "prescribed," or words of the like import are used, it shall be understood that the direction, requirement, permission, order, designation, or prescription of the Owner's Engineer is intended; and similarly, the words, "approved," "acceptable," "satisfactory," or words of like import, shall mean approved by, or acceptable to, or satisfactory to the Owner's Engineer, subject in each case to the final determination of the Owner.

Any reference to a specific requirement of a numbered paragraph of the contract specifications or a cited standard shall be interpreted to include all general requirements of the entire section, specification item, or cited standard that may be pertinent to such specific reference.

10-21 LABORATORY. A testing laboratory as may be designated or approved by the Owner's Engineer to test construction materials and products.

10-22 LABOR AND MATERIALS BOND. The approved form of security furnished by the Contractor and his surety as a guaranty that he will pay in full all bills and accounts for materials and labor used in the construction of the work. Also known as Payment Bond.

10-23 MAJOR AND MINOR CONTRACT ITEMS. A major contract item shall be any item that is listed in the proposal, the total cost of which is equal to or greater than 10 percent of the total amount of the awarded contract. All other items shall be considered minor contract items.

10-24 MATERIALS. Any substance specified for use in the construction of the contract work.

10-24a MUTCD. The *Manual on Uniform Traffic Control Devices for Streets and Highways*, U.S. Department of Transportation, Federal Highway Administration, latest Edition.

10-25 NOTICE TO PROCEED. A written notice to the Contractor to begin the actual contract work on a previously agreed to date. If applicable, the Notice to Proceed shall state the date on which the contract time begins.

10-26 OWNER (SPONSOR). The term Owner shall mean the party of the first part or the contracting agency signatory to the contract.

10-27 OWNER'S ENGINEER. The individual, partnership, firm, or corporation duly authorized by the Owner (sponsor) to be responsible for engineering supervision of the contract work and acting directly or through an authorized representative. The Owner's Engineer is:

C.L. Williams Consulting Inc.
621 South Hillside Lane
Pinetop, Arizona 85935
(928) 367-2248

Contacts: Joseph M. Alwin, P.E. (joe@clwilliams.net)

10-28 PAVEMENT. The combined surface, base course, and sub base course, if any, considered as a single unit.

10-29 PERFORMANCE BOND. The approved form of security furnished by the Contractor and his surety as a guaranty that the Contractor will complete the work in accordance with the terms of the contract.

10-30 PLANS. The official drawings or exact reproductions, approved by the Owner's Engineer, which show the location, character, dimensions and details of the work to be done and which are to be considered as a part of the contract, supplementary to the specifications.

10-31 PROJECT. The agreed scope of work for accomplishing specific tasks.

10-32 PROPOSAL. The written offer of the bidder (when submitted on the approved proposal form) to perform the contemplated work and furnish the necessary materials in accordance with the provisions of the plans and specifications.

10-33 PROPOSAL GUARANTY. The security furnished with a proposal to guarantee that the bidder will enter into a contract if his proposal is accepted by the Owner.

10-34 SPECIFICATIONS. A part of the contract containing the written directions and requirements for completing the contract work. Standards for specifying materials or testing which are cited in the contract specifications by reference shall have the same force and effect as if included in the contract physically.

10-35 STRUCTURES. Facilities such as bridges, culverts, catch basins, inlets, retaining walls, cribbing, storm and sanitary sewer lines, water lines, underdrains, electrical ducts, manholes, handholes, lighting fixtures and bases, transformers, flexible and rigid pavements, navigational aids, buildings, vaults, and other manmade features that may be encountered in the work and not otherwise classified herein.

Definition of Terms continued...

10-36 SUBGRADE. The soil that forms the pavement foundation.

10-37 SUPERINTENDENT. The Contractor's authorized representative who is present on the work site during progress, and is authorized to receive and fulfill instructions from the Owner's Engineer, and who shall supervise and direct the construction.

10-38 SUPPLEMENTAL AGREEMENT. A written agreement between the Contractor and the Owner covering: 1) work that would increase or decrease the total dollar amount of the awarded contract, or any major contract item, by more than 25 percent, such increased or decreased work being within the scope of the originally awarded contract, or 2) work that is not within the scope of the originally awarded contract.

10-39 SURETY. The corporation, partnership, or individual, other than the Contractor, executing payment or performance bonds which are furnished to the Owner by the Contractor.

10-40 WORK. The furnishing of all labor, materials, tools, equipment and incidentals necessary or convenient to the Contractor's performance of all duties and obligations imposed by the contract, plans, and specifications.

10-41 WORK DAY, WORKING DAY. A work day shall be any day other than a legal holiday, Saturday, or Sunday on which the normal working forces of the Contractor may proceed with regular work for at least 6 hours toward completion of the contract, unless work is suspended for causes beyond the Contractor's control. Saturdays, Sundays and holidays on which the Contractor's forces engage in regular work, after obtaining written permission from the Public Works Director, or his authorized representative, which requires the presence of an inspector, will be considered and applied as working days.

10-42 WORK WEEK. A work week shall consist of forty (40) hours beginning on Sunday and ending on Saturday. Should the Contractor engage in work exceeding the forty (40) hour work week which requires the presence of an inspector, as determined by the County Public Works Director or his authorized representative, the Contractor shall reimburse the County for all overtime hours as 10-43.

10-43 OVERTIME HOURS. Any and all hours worked which are other than a normal work week as defined under 10-42. Contractor must give prior written notification to the Public Works Director or his authorized representative, for any and all overtime hours to be worked. It shall be at the Owner's discretion to provide an inspector at the worksite to ensure compliance during any and all overtime hours worked.

10-44 OVERTIME PAY. Any and all pay resulting from overtime hours worked.

Definition of Terms continued...

10-45 OWNER'S INSPECTOR'S OVERTIME PAY. Any and all pay to the Owner's Inspector for overtime hours worked resulting from the Contractor having received approval for overtime hours. The inspector's overtime pay shall be the actual monies paid by the County and shall be reimbursed by the Contractor to the County. Certified payrolls for the Owner's Inspector's Overtime will be submitted to the Contractor. The cost for the Owner's Inspector's Overtime Pay will be deducted from the Contractor's billing.

10-46 SUBSTANTIAL COMPLETION. See the ADOT Standard Specification Section 105.19

SECTION 20

PROPOSAL REQUIREMENTS AND CONDITIONS

20-03 CONTENTS OF PROPOSAL FORMS. The Owner shall furnish bidders with electronic copies of the proposal forms. All documents attached to or referenced within the proposal forms are necessary parts of the proposal.

The plans, specifications, and other documents designated in the proposal whether attached or not to the proposal are considered as a part of and included with the proposal.

20-04 ISSUANCE OF PROPOSAL FORMS. The Owner reserves the right to refuse to issue a proposal form to a prospective bidder should such bidder be in default for any of the following reasons:

(a) Failure to comply with any prequalification regulations of the Owner, if such regulations are cited, or otherwise included, in the proposal as a requirement for bidding.
(b) Failure to pay, or satisfactorily settle, all bills due for labor and materials on former contracts in force (with the Owner) at the time the Owner issues the proposal to a prospective bidder.
(c) Contractor default under previous contracts with the Owner.
(d) Unsatisfactory work on previous contracts with the Owner.

20-05 INTERPRETATION OF ESTIMATED PROPOSAL QUANTITIES. An estimate of quantities of work to be done and materials to be furnished under these specifications is given in the proposal. It is the result of careful calculations and is believed to be correct. It is given only as a basis for comparison of proposals and the award of the contract. The Owner does not expressly or by implication agree that the actual quantities involved will correspond exactly therewith; nor shall the bidder plead misunderstanding or deception because of such estimates of quantities, or of the character, location, or other conditions pertaining to the work. **Payment to the Contractor will be made only for the actual quantities of work performed or materials furnished in accordance with the plans and specifications.** It is understood that the quantities may be increased or decreased as hereinafter provided in the subsection titled ALTERATION OF WORK AND QUANTITIES of Section 40-02 without in any way invalidating the unit bid prices.

20-06 EXAMINATION OF PLANS, SPECIFICATIONS, AND SITE. The bidder is expected to carefully examine the site of the proposed work, the proposal, plans, specifications, and contract forms. He shall satisfy himself as to the character, quality, and quantities of work to be performed, materials to be furnished, and as to the requirements of the proposed contract. The submission of a proposal shall be prima facie evidence that the bidder has made such examination and is satisfied as to the conditions to be encountered in performing the work and as to the requirements of the proposed contract, plans and specifications.

If any person contemplating submitting a bid for the proposed contract is in doubt as to the true meaning of any part of the plans, specifications, or other proposed contract documents, or finds discrepancies in, or omissions from the drawings or specifications, he may submit to the Owner's Engineer a written request for an interpretation or correction thereof. The person submitting the request will be responsible for its prompt delivery. Any interpretation or correction of the contract documents will be made only by addendum duly issued and a copy of such addendum will be made or delivered to each person having received a set of such documents. The Owner will not be responsible for any other explanations or interpretations of the contract documents.

Any addenda or bulletins issued during the time of bid preparations, forming a part of the contract documents furnished the bidder for the preparation of his bid, shall be covered in the bid, and shall be made a part of the contract.

20-07 PREPARATION OF PROPOSAL The bidder shall submit his proposal on the forms furnished by the Owner. All blank spaces in the proposal forms must be correctly filled in where indicated for each and every item for which a quantity is given. The bidder shall state the price (written in ink or typed) in NUMERALS for which he proposes to do each pay item furnished in the proposal. The TOTAL AGGREGATE AMOUNT bid shall be stated in both WORDS and NUMERALS. A minimum of one (1) original and one (1) copy all with original signatures shall be submitted.

The bidder shall sign his proposal correctly and in ink. If the proposal is made by an individual, his name and mailing address must be shown. If made by a partnership, the name and mailing address of each member of the partnership must be shown. If made by a corporation, the person signing the proposal shall give the name of the state under which the laws of the corporation were chartered and the name, titles, and business address of the president, secretary, and the treasurer. Anyone signing a proposal as an agent shall file evidence of his authority to do so and that the signature is binding upon the firm or corporation.

20-08 IRREGULAR PROPOSALS. Proposals shall be considered irregular for the following reasons:

(a) If the proposal is on a form other than that furnished by the Owner, or if the Owner's form is altered, or if any part of the proposal form is detached.
(b) If there are unauthorized additions, conditional or alternate pay items, or irregularities of any kind which make the proposal incomplete, indefinite, or otherwise ambiguous.
(c) If the proposal does not contain a unit price for each pay item listed in the proposal, except in the case of authorized alternate pay items, for which the bidder is not required to furnish a unit price.
(d) If the proposal contains unit prices that are obviously unbalanced.
(e) If the proposal is not accompanied by the proposal guaranty specified by the Owner.

The Owner reserves the right to reject any irregular proposal and the right to waive technicalities if such waiver is in the best interest of the Owner and conforms to local laws and ordinances pertaining to the letting of construction contracts.

20-09 PROPOSAL GUARANTY. Each proposal shall be accompanied by a certified check, cashier's check or surety bond for ten percent (10%) of the amount of the bid included in the proposal as a guarantee that the Contractor will enter into a contract to perform the proposed work in accordance with the plans and specifications.

20-10 DELIVERY OF PROPOSAL. Each proposal submitted shall be placed in a sealed envelope plainly marked with the project number, name of project, and name and business address of the bidder on the outside. When sent by mail, preferably registered, or courier, the sealed proposal, marked as indicated above, should be enclosed in an additional envelope. No proposal will be considered unless received at the place specified in the advertisement before the time specified. Proposals received after the specified time shall be returned to the bidder unopened.

20-11 WITHDRAWAL OR REVISION OF PROPOSALS. A bidder may withdraw or revise (by withdrawal of one proposal and submission of another) a proposal provided that the bidder's request for withdrawal is received by the Owner in writing or by telegram before the time specified for receipt of bids. Revised proposals must be received at the place specified in the advertisement before the time specified for receipt of bids.

20-12 PUBLIC OPENING OF PROPOSALS. Proposals shall be opened and read publicly at the time and place specified in the advertisement. Bidders, their authorized agents, and other interested persons are invited to attend.

Proposals that have been withdrawn (by written or telegraphic request) or received after the time specified shall be returned to the bidder unopened.

This will be the only time, until bid award, this information will be revealed.

20-13 DISQUALIFICATION OF BIDDERS. A bidder shall be considered disqualified for any of the following reasons:

(a) Submitting more than one proposal from the same partnership, firm, or corporation under the same or different name.
(b) Evidence of collusion among bidders. Bidders participating in such collusion shall be disqualified as bidders for any future work of the Owner until any such participating bidder has been reinstated by the Owner as a qualified bidder.
(c) If the bidder is considered to be in "default" for any reason specified in the subsection titled ISSUANCE OF PROPOSAL FORMS of Section 20-04.
(d) Failure to submit all required official bid forms.

20-14 PROTESTS. Only other bidders who have submitted a bid for this project have the right to protest. A protest of a proposed award or of an award must be filed within ten (10) days after the bid award by the Gila County Board of Supervisors and must be sent to the Board of Supervisors. A protest must be in writing and must include:

(a) Name, address and telephone number of the protester.
(b) Signature of the protester or its representative, and evidence of authority to sign.
(c) Identification of the contract and the solicitation or contract number.
(d) Detailed statement of the legal and factual grounds of protest including copies of relevant documents.
(e) The form of relief requested.

All protests shall be sent to the attention of the Gila County Board of Supervisors, 1400 E. Ash Street, Globe, Arizona 85501

SECTION 30

AWARD AND EXECUTION OF CONTRACT

30-01 CONSIDERATION OF PROPOSALS. After the proposals are publicly opened and read, they will be compared on the basis of the summation of the products obtained by multiplying the estimated quantities shown in the proposal by the unit bid prices. If a bidder's proposal contains a discrepancy between unit bid prices written in words and unit bid prices written in numbers, the unit price written in words, unless obviously incorrect, shall govern.

Until the award of a contract is made, the Owner reserves the right to reject a bidder's proposal for any of the following reasons:

(a) If the proposal is irregular as specified in the subsection titled IRREGULAR PROPOSALS of Section 20-08.
(b) If the bidder is disqualified for any of the reasons specified in the subsection titled DISQUALIFICATION OF BIDDERS of Section 20-13.

In addition, until the award of a contract is made, the Owner reserves the right to reject any or all proposals; waive technicalities, if such waiver is in the best interest of the Owner and is in conformance with applicable state and local laws or regulations pertaining to the letting of construction contracts; advertise for new proposals; or proceed with the work otherwise. All such actions shall promote the Owner's best interests.

30-02 AWARD OF CONTRACT. The award of contract, if it is to be awarded, shall be made within sixty (60) calendar days of the date specified for publicly opening proposals, unless otherwise specified herein.

This contract will be awarded to the responsible bidder whose bid conforms to the invitation and whose bid is the most advantageous to the Owner concerning price, conformity to the specifications and other factors.

30-03 CANCELLATION OF AWARD. The Owner reserves the right to cancel the award without liability to the bidder, except return of proposal guaranty, at any time before a contract has been fully executed by all parties and is approved by the Owner in accordance with the subsection titled APPROVAL OF CONTRACT of Section 30-07.

30-04 RETURN OF PROPOSAL GUARANTY. All proposal guaranties, except those of the two (2) lowest bidders, will be returned immediately after the Owner has made a comparison of bids as hereinbefore specified in the subsection titled CONSIDERATION OF PROPOSALS of Section 30-01. Proposal guaranties of the two lowest bidders will be retained by the Owner until such time as an award is made, at which time the unsuccessful bidder's proposal guaranty will be returned as soon as the Owner receives the contract bonds as specified in the subsection titled REQUIREMENTS OF CONTRACT BONDS of Section 30-05.

30-05 REQUIREMENTS OF CONTRACT BONDS. At the time of the execution of the contract, the successful bidder shall furnish the Owner surety bond or bonds which have been fully executed by the bidder and his surety guaranteeing the performance of the work and the payment of all legal debts that may be incurred by reason of the Contractor's performance of the work. The surety and the form of the bond or bonds shall be acceptable to the Owner. Unless otherwise specified in this subsection, the surety bond or bonds shall be in a sum equal to the full amount of the contract. All bonds shall conform to the requirements of A.R.S. §34-222 and §34-223. §

30-06 EXECUTION OF CONTRACT. The successful bidder shall sign (execute) the necessary agreements for entering into the contract and return such signed contract to the Owner, along with the fully executed surety bond or bonds specified in the subsection titled REQUIREMENTS OF CONTRACT BONDS of Section 30-05, the Contractor's Statement of Insurance and an original Certificate of Insurance conforming with the requirements of Section 70-10, within 10 calendar days from the date mailed or otherwise delivered to the successful bidder. If the contract is mailed, special handling is recommended.

30-07 APPROVAL OF CONTRACT. Upon receipt of the contract and contract bond or bonds that have been executed by the successful bidder, the Owner shall complete the execution of the contract in accordance with local laws or ordinances, and return the fully executed contract to the Contractor. Delivery of the fully executed contract to the Contractor shall constitute the Owner's approval to be bound by the successful bidder's proposal and the terms of the contract. **This agreement is subject to cancellation pursuant to A.R.S. §38-511.**

30-08 FAILURE TO EXECUTE CONTRACT. Failure of the successful bidder to execute the contract as specified in the subsection titled EXECUTION OF CONTRACT of Section 30-06 and furnish an acceptable surety bond or bonds within the 10-calendar-day period specified in the subsection titled REQUIREMENTS OF CONTRACT BONDS of Section 30-05 shall be just cause for cancellation of the award and forfeiture of the proposal guaranty, not as a penalty, but as liquidation of damages to the Owner.

30-09 DISPUTE & RESOLUTION.

- **Initial Notification & Dispute of Resolution:** As required by these Specifications or any time the Contractor believes the action or decision of the County, lack of action by the County, or for some other reason will result in or necessitate the revision of the Contract, the County Engineer must be notified immediately. If within two (2) working days the identified issue has not been resolved between the Contractor and the County, the Contractor shall provide a written notice. At a minimum, the written notice shall provide a description of the nature of the issue, the time and date the problem was discovered, and if appropriate, the location of the issue. After initial written notice has been provided, the County Engineer will proceed in accordance with *MAG Uniform Standard Specifications Subsection 104.2.* In addition to proceeding in accordance with *Subsection 104.2,* the Contractor and the County must make every effort to resolve the issue identified in the initial notice. Only if the issue cannot be quickly resolved will it be necessary to proceed to the next step in accordance with *MAG Specs Subsection 110.2.2 Dispute Resolution.*

- **Process for Dispute Resolution:** If the Contractor rejects the decision of the County according to *Subsection 110.2.2(B)*, the Contractor may begin the Administration Process to resolve the dispute. All dispute resolutions shall be handled in accordance with *MAG Spec's Subsection 110.3, Administrative Process for Dispute Resolution.*

The administrative process for the resolution of disputes is sequential in nature and is composed of the following levels: Level I (County Project Manager), Level II (County Engineer, Level III (Public Works Director).

The provision set forth in *Subsection 110.2* is a contractual obligation assumed by the Contractor in executing the Contract. It is understood that the Contractor will be forever barred from recovering against the County if the Contractor fails to give notice of any act or failure to act, by the County, or the happening of any event, thing, or occurrence, in accordance with *Subsection 104.2*, Alteration of Work.

- **Dispute Review Board:** If the Dispute Review Board is utilized as prescribed in *Subsection 110.3.3*, the County Engineer shall be notified within thirty (30) days after the Level III Representative decision. The Dispute Review Board is a three (3) member board independent of the parties involved in the issue. The County and Contractor shall each select a member for this board. The third (3rd) member shall be a mutually agreed upon independent member. This Review Board must be selected within fourteen (14) calendar days after notice to the Level III Representative. Each member shall agree to impartially serve the County and Contractor. Fees and expenses of the Board Members are to be shared equally by the County and the Contractor. The Dispute Review Board shall meet within thirty (30) days of the selection of the board, unless, by mutual agreement, another date is selected. The scope of the Dispute Review Board shall be restricted and limited to the matters originally presented to the Level III Representative for decision or determination and shall include no other matters. The Board shall consider and evaluate the dispute and render a written decision that assigns financial responsibilities and allocates adjustments in the contact time, if applicable, within seven (7) calendar days after the meeting. The decision of the Dispute Review Board will be final.

SECTION 40

SCOPE OF WORK

40-01 INTENT OF CONTRACT. The intent of the contract is to provide for construction and completion, in every detail, of the work described. It is further intended that the Contractor shall furnish all labor, materials, equipment, tools, and supplies required to complete the work in accordance with the plans, specifications, and terms of the contract.

40-02 ALTERATION OF WORK AND QUANTITIES. The Owner reserves and shall have the right to make such alterations in the work as may be necessary or desirable to complete the work originally intended in an acceptable manner. Unless otherwise specified herein, the Owner's Engineer shall be and is hereby authorized to make such alterations in the work as may increase or decrease the originally awarded contract quantities, provided that the aggregate of such alterations does not change the total contract cost or the total cost of any major contract item by more than twenty-five percent (25%) (total cost being based on the unit prices and estimated quantities in the awarded contract). Alterations which do not exceed the twenty-five percent (25%) limitation shall not invalidate the contract nor release the surety, and the Contractor agrees to accept payment for such alterations as if the altered work had been a part of the original contract. These alterations which are for work within the general scope of the contract shall be covered by "Change Orders" issued by the Owner's Engineer. Change order for altered work shall include extensions of contract time where, in the Owner's Engineer's opinion, such extensions are commensurate with the amount and difficulty of added work.

Should the aggregate amount of altered work exceed the twenty-five percent (25%) limitation hereinbefore specified, such excess altered work shall be covered by supplemental agreement. If the Owner and the Contractor are unable to agree on a unit adjustment for any contract item that requires a supplemental agreement, the Owner reserves the right to terminate the contract with respect to the item and make other arrangements for its completion.

All supplemental agreements shall require consent of the Contractor's surety and separate performance and payment bonds.

40-03 OMITTED ITEMS. The Owner's Engineer may, in the Owner's best interest, omit from the work any contract item, except major contract items. Major contract items may be omitted by a supplemental agreement. Such omission of contract items shall not invalidate any other contract provision or requirement.

Should a contract item be omitted or otherwise ordered to be non-performed, the Contractor shall be paid for all work performed toward completion of such item prior to the date of the order to omit such item. Payment for work performed shall be in accordance with the subsection titled PAYMENT FOR OMITTED ITEMS of Section 90-04.

40-04 EXTRA WORK. Should acceptable completion of the contract require the Contractor to perform an item of work for which no basis of payment has been provided in the original contract or previously issued change orders or supplemental agreements, the same shall be called EXTRA WORK. Extra work that is within the general scope of the contract shall be covered by written change order. Change orders for such extra work shall contain agreed unit prices for performing the change order work in accordance with the requirements specified in the order, and shall contain any adjustment to the contract time that, in the Owner's Engineer's opinion, is necessary for completion of such extra work.

When determined by the Owner's Engineer to be in the Owner's best interest, he may order the Contractor to proceed with extra work by force account as provided in the subsection titled PAYMENT FOR EXTRA AND FORCE ACCOUNT WORK of Section 90-05.

Extra work that is necessary for acceptable completion of the project, but is not within the general scope of the work covered by the original contract, shall be covered by an agreement as hereinbefore defined in the subsection titled SUPPLEMENTAL AGREEMENT of Section 10-38.

Any claim for payment of extra work that is not covered by written agreement (change order or supplemental agreement) shall be rejected by the Owner.

40-05 MAINTENANCE OF TRAFFIC. It is the explicit intention of the contract that the safety of all traffic, vehicular and pedestrian, as well as the Contractor's equipment and personnel, is the most important consideration.

With respect to his own operations and the operations of all his subcontractors, the Contractor shall provide marking, lighting, and other acceptable means of identifying personnel, equipment, vehicles, storage areas, and any work area or condition that may be hazardous to the operation of all traffic, vehicular and pedestrian.

When the contract requires the maintenance of vehicular traffic on an existing road, street, or highway during the Contractor's performance of work that is otherwise provided for in the contract, plans, and specifications, the Contractor shall keep such road, street, or highway open to all traffic and shall provide such maintenance as may be required to accommodate traffic. The Contractor shall furnish, erect, and maintain barricades, warning signs, flaggers, and other traffic control devices in reasonable conformity with the Manual of Uniform Traffic Control Devices for Streets and Highways (MUTCD) PART VI, (published by the United States Government Printing Office), unless otherwise specified herein. The Contractor shall also construct and maintain in a safe condition any temporary connections necessary for ingress to and egress from abutting property or intersecting roads, streets or highways. Unless otherwise specified herein, the Contractor will not be required to furnish snow removal for such existing road, street, or highway.

The Contractor shall make his own estimate of all labor, materials, equipment, and incidentals necessary for providing the maintenance of pedestrian and vehicular traffic as specified in this subsection.

40-06 RIGHTS IN AND USE OF MATERIALS FOUND IN THE WORK. Should the Contractor encounter any materials such as (but not restricted to) sand, stone, gravel, slag, or concrete slabs within the established lines, grades, or grading sections, the use of which is intended by the terms of the contract to be either embankment or waste, he may at his option either:

(a) Use such material in another contract item, providing such use is approved by the Owner's Engineer and is in conformance with the contract specifications applicable to such use; or,
(b) Remove such material from the site, upon written approval of the Owner's Engineer; or,
(c) Use such material for his own temporary construction on site; or,
(d) Use such material as intended by the terms of the contract.

Should the Contractor wish to exercise option (a), (b), or (c), he shall request the Owner's Engineer's approval in advance of such use. Should the Owner's Engineer approve the Contractor's request to exercise option (a), (b), or (c), the Contractor shall be paid for the excavation or removal of such material at the applicable contract price. The Contractor shall replace, at his own expense, such removed or excavated material with an agreed equal volume of material that is acceptable for use in constructing embankment, backfills, or otherwise to the extent that such replacement material is needed to complete the contract work. The Contractor shall not be charged for his use of such material so used in the work or removed from the site.

Should the Owner's Engineer approve the Contractor's exercise of option (a), the Contractor shall be paid, at the applicable contract price, for furnishing and installing such material in accordance with requirements of the contract item in which the material is used.

It is understood and agreed that the Contractor shall make no claim for delays by reason of his exercise of option (a), (b), or (c).

The Contractor shall not excavate, remove, or otherwise disturb any materials, structure, or part of a structure which is located outside the lines, grades, or grading sections established for the work, except where such excavation or removal is provided for in the contract, plans, or specifications.

40-07 FINAL CLEANING UP. Upon completion of the work and before acceptance and final payment will be made, the Contractor shall remove from the site all machinery, equipment, surplus and discarded materials, rubbish, temporary structures, and stumps or portions of trees. He shall cut all brush and woods within the limits indicated and shall leave the site in a neat and presentable condition. Material cleared from the site and deposited on adjacent property will not be considered as having been disposed of satisfactorily, unless the Contractor has obtained the written permission of such property owner and furnished a copy to the Owner's Engineer.

SECTION 50

CONTROL OF WORK

50-01 AUTHORITY OF THE OWNER'S ENGINEER. The Owner shall decide any and all questions which may arise as to the quality and acceptability of materials furnished, based upon the Contractor's Engineer's certification for the quality and acceptability work performed, and as to the manner of performance and rate of progress of the work. He shall decide all questions which may arise as to the interpretation of the specifications or plans relating to the work, the fulfillment of the contract on the part of the Contractor, and the rights of different contractors on the project. The Owner shall review and determine, based upon the Contractor's Engineer's certifications on amounts, quality of work and materials furnished, the amount and quality of the several kinds of work performed and materials furnished which are to be paid for under contract.

50-02 CONFORMITY WITH PLANS AND SPECIFICATIONS. All work and materials furnished shall be the full responsibility of the Contractor and shall be in reasonably close conformity with the lines, grades, grading section, cross sections, dimensions, material requirements, and testing requirements that are specified (including specified tolerances) in the contract, plans, or specifications, and shall be certified by the Contractor's Engineer.

If the Owner finds the materials furnished, work performed, or the finished product not within reasonably close conformity with the plans and specifications, but that the portion of the work affected will, in his opinion, result in a finished product having a level of safety, economy, durability and workmanship acceptable to the Owner, he will advise the Owner of his determination that the affected work be accepted and remain in place. In this event, the Owner will document his determination and recommend to the Owner a basis of acceptance which will provide for an adjustment in the contract price for the affected portion of the work. The Owner's determination and recommended contract price adjustments will be based on good engineering judgment and on such tests or retests by the Contractor's Engineer, and at the Contractor's expense, of the affected work as are, in his opinion, needed. Changes in the contract price shall be covered by contract modifications (change order or supplemental agreement) as applicable.

If the Owner finds the materials furnished, work performed, or the finished product are not in reasonably close conformity with the plans and specifications and have resulted in an unacceptable finished product, the affected work or materials shall be removed and replaced or otherwise corrected by and at the expense of the Contractor in accordance with the Owner written orders.

For the purpose of this subsection, the term "reasonably close conformity" shall not be construed as waiving the Contractor's responsibility to complete the work in accordance with the contract, plans and specifications. The terms shall not be construed as waiving the Owner's right to insist on strict compliance with the requirements of the contract, plans, and specifications during the Contractor's prosecution of the work, when, in the Owner's opinion, such compliance is essential to provide an acceptable finished portion of the work.

For the purpose of this subsection, the term "reasonably close conformity" is also intended to provide the Owner with the authority to use good engineering judgment in his determinations as to acceptance of work that is not in strict conformity but will provide a finished product equal to or better than that intended by the requirements of the contract, plans and specifications.

50-03 COORDINATION OF CONTRACT, PLANS AND SPECIFICATIONS. The contract, plans, specifications, and all referenced standards cited are essential parts of the contract requirements. A requirement occurring in one is as binding as though occurring in all. They are intended to be complementary and to describe and provide for a complete work. In case of discrepancy, calculated dimensions will govern over scaled dimensions; contract technical specifications shall govern over contract general provisions, plans, cited standards for materials or testing; contract general provisions shall govern over plans, cited standards for materials or testing; plans shall govern over County standards for materials or testing.

The Contractor shall not take advantage of any apparent error or omission on the plans or specifications. In the event the Contractor discovers any apparent error or discrepancy, he shall immediately call upon the Owner for his interpretation and decision, and such decision shall be final.

50-04 COOPERATION OF CONTRACTOR. The Contractor will be supplied with two copies each of the plans and specifications. He shall have available on the job at all times one copy each of the plans and specifications. Additional copies of plans and specifications may be obtained by the Contractor for the cost of reproduction.

The Contractor shall give constant attention to the work to facilitate the progress thereof, and he shall cooperate with the Owner and his inspectors and with other contractors in every way possible. The Owner shall allocate the work and designate the sequence of construction in case of controversy between contractors. The Contractor shall have a competent superintendent on the job at all times who is fully authorized as his agent for the work. The superintendent shall be capable of reading and thoroughly understanding the plans and specifications and shall receive and fulfill instructions from the Owner or his authorized representative.

50-05 COOPERATION BETWEEN CONTRACTORS. The Owner reserves the right to contract for and perform other or additional work on or near the work covered by this contract.

When separate contracts are let within the limits of any one project, each contractor shall conduct his work so as not to interfere with or hinder the progress of completion of the work being performed by other contractors. Contractors working on the same project shall cooperate with each other as directed.

Each contractor involved shall assume all liability, financial or otherwise, in connection with his contract and shall protect and save harmless the Owner from any and all damages or claims that may arise because of inconvenience, delays, or loss experienced by him because of the presence and operations of other contractors working within the limits of the same project.

The Contractor shall arrange his work and shall place and dispose of the materials being used so as not to interfere with the operations of the other contractors within the limits of the same project. He shall join his work with that of the others in an acceptable manner and shall perform it in proper sequence to that of the others.

50-06 CONSTRUCTION LAYOUT AND STAKES. The Contractor and the Contractor's Engineer will establish lines, grades, and measurements necessary to the proper prosecution and control of the work contracted for under these specifications. The Contractor shall satisfy himself as to the accuracy of all measurements before constructing any permanent structure. Any question raised relative to the accuracy of construction shall not be raised unless all survey stakes remain intact. Should such stakes not be present and verified as to their origin, no claim for addition compensation for correction shall be submitted for payment and such shall be corrected by the Contractor at his expense.

50-07 AUTOMATICALLY CONTROLLED EQUIPMENT. Whenever batching or mixing plant equipment is required to be operated automatically under the contract and a breakdown or malfunction of the automatic controls occurs, the equipment may be operated manually or by other methods for a period of 48 hours following the breakdown or malfunction, provided this method of operations will produce results which conform to all other requirements of the contract.

50-08 AUTHORITY AND DUTIES OF INSPECTORS. Inspectors employed by the Owner shall be authorized to inspect all work done and all material furnished. Such inspection may extend to all or any part of the work and to the preparation, fabrication, or manufacture of the materials to be used. Inspectors are not authorized to revoke, alter, or waive any provision of the contract. Inspectors are not authorized to issue instructions contrary to the plans and specifications or to act as foreman for the Contractor.

Inspectors employed by the Owner are authorized to notify the Contractor or his representative of any failure of the work or materials to conform to the requirements of the contract, plans, or specifications and to reject such nonconforming materials in question until such issues can be referred to the Owner's Engineer for his decision.

50-09 INSPECTION OF THE WORK. All materials and each part or detail of the work shall be subject to inspection by the Owner. The Owner shall be allowed access to all parts of the work and shall be furnished with such information and assistance by the Contractor as is required to make a complete and detailed inspection.

If the Owner requests it, the Contractor, at any time before acceptance of the work, shall remove or uncover such portions of the finished work as may be directed. After examination, the Contractor shall restore said portions of the work to the standard required by the specifications. Should the work thus exposed or examined prove acceptable, the uncovering, or removing and the replacing of the covering or making good of the parts removed will be paid for as extra work; but should the work so exposed or examined prove unacceptable, the uncovering, or removing, and the replacing of the covering or making good of the parts removed will be at the Contractor's expense.

Any work done or materials used without supervision or inspection by an authorized representative of the Owner may be ordered removed and replaced at the Contractor's expense unless the Owner's representative failed to inspect after having been given reasonable notice in writing that the work was to be performed.

Should the contract work include relocation, adjustment, or any other modification to existing facilities, not the property of the (contract) Owner, authorized representatives of the owners of such facilities shall have the right to inspect such work. Such inspection shall in no way make any facility owner a party to the contract, and shall in no way interfere with the rights of the parties to this contract.

50-10 REMOVAL OF UNACCEPTABLE AND UNAUTHORIZED WORK. All work which does not conform to the requirements of the contract, plans, and specifications will be considered unacceptable, unless otherwise determined acceptable by the Owner as provided in the subsection titled CONFORMITY WITH PLANS AND SPECIFICATIONS of Section 50-02.

Unacceptable work, whether the result of poor workmanship, use of defective materials, damage through carelessness, or any other cause found to exist prior to the final acceptance of the work, shall be removed immediately and replaced in an acceptable manner in accordance with the provisions of the subsection titled CONTRACTOR'S RESPONSIBILITY FOR WORK of Section 70-13.

No work shall be done without lines and grades having been given by the Contractor's Engineer and authorized by the Owner. Work done contrary to the instructions of the Owner, work done beyond the lines shown on the plans or as given, except as herein specified, or any extra work done without authority will be considered as unauthorized and will not be paid for under the provisions of the contract. Work so done may be ordered removed or replaced at the Contractor's expense.

Upon failure on the part of the Contractor to comply as soon as possible with any order of the Owner made under the provisions of this subsection, the Owner will have authority to cause unacceptable work to be remedied or removed and replaced and unauthorized work to be removed and to deduct the costs (incurred by the Owner) from any monies due or to become due the Contractor.

50-11 LOAD RESTRICTIONS. The Contractor shall comply with all legal load restrictions in the hauling of materials on public roads beyond the limits of the work. A special permit will not relieve the Contractor of liability for damage that may result from the moving of material or equipment.

The operation of equipment of such weight or so loaded as to cause damage to structures or to any other type of construction will not be permitted. Hauling of materials over the base course or surface course under construction shall be limited as directed. No loads will be permitted on a concrete pavement, base, or structure before the expiration of the curing period. The Contractor shall be responsible for all damage done by his hauling equipment and shall correct such damage at this own expense.

50-12 MAINTENANCE DURING CONSTRUCTION. The Contractor shall maintain the work during construction and until the work is accepted. This maintenance shall constitute continuous and effective work prosecuted day by day, with adequate equipment and forces so that the work is maintained in satisfactory condition at all times.

In the case of a contract for the placing of a course upon a course or subgrade previously constructed, the Contractor shall maintain the previous course or subgrade during all construction operations.

All costs of maintenance work during construction and before the project is accepted shall be included in the unit prices bid on the various contract items, and the Contractor will not be paid an additional amount for such work.

50-13 FAILURE TO MAINTAIN THE WORK. Should the Contractor at any time fail to maintain the work as provided in the subsection titled MAINTENANCE DURING CONSTRUCTION of Section 50-12, the Owner shall immediately notify the Contractor of such noncompliance. Such notification shall specify a reasonable time within which the Contractor shall be required to remedy such unsatisfactory maintenance conditions. The time specified will give due consideration to the emergency that exists.

Should the Contractor fail to respond to the Owner notification, the Owner may suspend any work necessary for the Owner to correct such unsatisfactory maintenance condition, depending on the emergency that exists. Any maintenance cost incurred by the Owner shall be deducted from monies due or to become due the Contractor.

50-14 PARTIAL ACCEPTANCE. If at any time during the prosecution of the project the Contractor substantially completes a usable unit or portion of the work, the occupancy of which will benefit the Owner, he may request the Owner to make final inspection of that unit. If the Owner finds upon inspection that the unit has been satisfactorily completed in compliance with the contract, and certified to be in compliance by the Contractor's Engineer, he may accept it as being completed, and the Contractor may be relieved of further responsibility for that unit, subject to stated guarantees. Such partial acceptance and beneficial occupancy by the Owner shall not void or alter any provision of the contract.

50-15 FINAL ACCEPTANCE. Upon due notice from the Contractor of presumptive completion of the entire project, and certification of completion and compliance to the approved plans by the Contractor's Engineer, Owner will make an inspection. If all construction provided for and contemplated by the contract is found to be completed in accordance with the contract, plans, and specifications, such inspection shall constitute the final inspection. The Owner shall notify the Contractor in writing of final acceptance as of the date of the final inspection.

If, however, the inspection discloses any work, in whole or in part, as being unsatisfactory, the Owner will give the Contractor the necessary instructions for correction of same, and the Contractor shall immediately comply with and execute such instructions. Upon correction of the work, and recertification by the Contractor's Engineer, another inspection will be made which shall constitute the final inspection, provided the work has been satisfactorily completed. In such event, the Owner will make the final acceptance and notify the Contractor in writing of this acceptance as of the date of final inspection.

50-16 CLAIMS FOR ADJUSTMENT AND DISPUTES. If for any reason the Contractor deems that additional compensation is due him for work or materials not clearly provided for in the contract, plans, or specifications or previously authorized as extra work, he shall notify the Owner in writing of his intention to claim such additional compensation before he begins the work on which he bases the claim. If such notification is not given or the Owner is not afforded proper opportunity by the Contractor for keeping strict account of actual cost as required, then the Contractor hereby agrees to waive any claim for such additional compensation. Such notice by the Contractor and the fact that the Owner has kept account of the cost of the work shall not in any way be construed as proving or substantiating the validity of the claim. When the work on which the claim for additional compensation is based has been completed, the Contractor shall, within 10 calendar days, submit his written claim, along with certification by the Contractor's Engineer, to the Owner for consideration in accordance with local laws or ordinances.

Nothing in this subsection shall be construed as a waiver of the Contractor's right to dispute final payment based on differences in measurements or computations.

50-17 GUARANTEE OF WORK (ADDITIONAL). The Contractor shall guarantee all work against any defects due to faulty materials or workmanship for a period of two years from the date of final inspection and acceptance. The Owner shall give notice of observed defects with reasonable promptness. Any omission on the part of the Owner to condemn defective work at the time of construction or final inspection shall not be deemed an acceptance. The Contractor shall be required to correct defective work or material at any time before final inspection and acceptance and within two years thereafter.

50-18 CONSTRUCTION SCHEDULE. Prior to commencement of the work the Contractor shall prepare and submit to the Owner for review, a written schedule covering the general sequence of the work to be performed on a bi-weekly basis. The work schedule, after review and acceptance by the Owner, shall not be changed without the written consent of the Owner. The Contractor shall assume the full responsibility for performing the work in an orderly procedure under the Contract.

50-19 NEGOTIATIONS. It is the intent of the County to award a Contract to the lowest responsible Bidder provided the Bid has been submitted in accordance with the requirements of the Bid Documents, is judged reasonable, and does not exceed the funds available.

(a) The County shall have the authority to negotiate with the lowest bidder to reduce the scope of the Project in the event that all responsive bids exceed the Project budget.

Bids shall be made available for public inspection by appointment only after the award has been made by the Board of Supervisors. The Board of Supervisors has the sole authority to award bids and any statement by any employee of the County is not binding on the Board.

The following criteria will be considered a part of the evaluation process:

(a) Competence and responsibility of Bidder.
(b) Qualifications and experience of Bidder.
(c) Past performance of Bidder.
(d) Conformity with bidding requirements and general considerations.
(e) Record of timely completion of punch lists on past projects.

Negotiations With Individual Contractors: Gila County Public Works Division shall establish procedures and schedules for conducting Negotiations. Disclosure of one (1) Contractor's Price or any information derived from competing Bid Prices or any information derived from competing Bids is prohibited.

(a) Any response to a request for clarification of a bid shall be in writing.
(b) The Public Works Division shall keep a record of all negotiations.

For the purpose of conducting Negotiations with Contractors, Gila County may use any of the following methods that, in their judgment, best meets the unique requirements.

(a) Concurrent Negotiations: Negotiations may be conducted concurrently with responsible Contractors for the purpose of determining source selection and/or Contract Award.

(b) Exclusive Negotiations: A determination may be made by the Public Works Director to enter into exclusive negotiations with the responsible Contractor whose bid is determined in the selection process to be the most Advantageous to Gila County.

Exclusive Negotiations may be conducted subsequent to concurrent Negotiations or may be conducted without requiring previous concurrent Negotiations.

(a) A determination to conduct exclusive Negotiations shall not constitute a Contract Award nor shall it confer any property rights to the successful bidder.

(b) If exclusive Negotiations are conducted and an agreement is not reached, the County may enter into exclusive Negotiations with the next highest ranked Contractor without the need to repeat the formal Solicitation process.

SECTION 60

CONTROL OF MATERIAL

60-01 SOURCE OF SUPPLY AND QUALITY REQUIREMENTS. The materials used on the work shall conform to the requirements of the contract, plans, and specifications. Unless otherwise specified, such materials that are manufactured or processed shall be new (as compared to used or reprocessed).

In order to expedite the inspection and testing of materials, the Contractor's Engineer shall furnish complete statements to the Owner as to the origin, composition, and manufacture of all materials to be used in the work. Such statements shall be furnished promptly after execution of the contract but, in all cases, prior to delivery of such materials.

~~At the Owner's option, materials may be approved at the source of supply before delivery is~~ started. If it is found after trial that sources of supply for previously approved materials do not produce specified products, the Contractor shall furnish materials from other sources.

It shall be the responsibility of the Contractor to provide sources of aggregates to complete the work specified in the specifications and on the plans. The Contractor shall so inform the Owner of the location of his proposed sources in sufficient time to allow for the necessary preliminary sampling and testing. The Owner shall sample the aggregate source(s) and test those samples to determine the source's suitability for use, based upon the specifications of the Contract. Any materials information provided by the Owner shall not be considered as a part of the contract, and should be used at the discretion of each prospective contractor in formulating his bids and plan of operation.

Any construction, building addition or alteration project which is financed by monies of this state or its political subdivisions shall not use endangered wood species unless an exemption is granted by the director of the Department of Administration. The director shall only grant an exemption if the use of endangered wood species is deemed necessary for historical restoration or to repair existing facilities and the use of any substitute material is not practical. Any lease-purchase agreement entered into by this state or its political subdivisions for construction shall specify that no endangered wood species may be used in the construction unless an exemption is granted by the director. As used in this subsection, an endangered wood species includes those listed in Appendix I of the Convention on International Trade in Endangered Species of Wild Flora and Fauna.

60-02 SAMPLES, TESTS, AND CITED SPECIFICATIONS. All materials used in the work shall be inspected, tested and certified by the Owner before incorporation in the work. Any work in which untested materials are used without approved or written permission of the Owner shall be performed at the Contractor's risk. Materials found to be unacceptable and unauthorized will not be paid for and, if directed by the Owner, shall be removed at the Contractor's expense. Unless otherwise designated, tests in accordance with the cited standard methods of ADOT, AASHTO or ASTM which are current on the date of advertisement for bids will be made by and at the expense of the Owner; samples will be taken by a qualified representative of the Owner.

All materials being used are subject to inspection, test, or rejection at any time prior to or during incorporation into the work.

60-03 CERTIFICATION OF COMPLIANCE. The Owner' may permit the use, prior to sampling and testing, of certain materials or assemblies when accompanied by manufacturer's certificates of compliance stating that such materials or assemblies fully comply with the requirements of the contract.

The certificate shall be signed by the manufacturer. Each lot of such materials or assemblies delivered to the work must be accompanied by a certificate of compliance in which the lot is clearly identified.

Materials or assemblies used on the basis of certificates of compliance may be sampled and tested at any time and if found not to be in conformity with contract requirements will be subject to rejection whether in place or not.

The form and distribution of certificates of compliance shall be as approved by the Owner.

When a material or assembly is specified by "brand name or equal" and the Contractor elects to furnish the specified "brand name," the Contractor shall be required to furnish the manufacturer's certificate of compliance for each lot of such material or assembly delivered to the work. Such certificate of compliance shall clearly identify each lot delivered and shall certify as to:

(a) Conformance to the specified performance, testing, quality or dimensional requirements; and,
(b) Suitability of the material or assembly for the use intended in the contract work.

Should the Contractor propose to furnish an "or equal" material or assembly, he shall furnish the manufacturer's certificates of compliance as hereinbefore described for the specified brand name material or assembly. However, the Owner shall be the sole judge as to whether the proposed "or equal" is suitable for use in the work.

The Owner reserves the right to refuse permission for use of materials or assemblies on the basis of certificates of compliance.

60-04 PLANT INSPECTION. The Owner or his authorized representative may inspect, at its source, any specified material or assembly to be used in the work. Manufacturing plants may be inspected from time to time for the purpose of determining compliance with specified manufacturing methods or materials to be used in the work and to obtain samples required for his acceptance of the material or assembly.

Should the Owner conduct plant inspections, the following conditions shall exist:

(a) The Owner shall have the cooperation and assistance of the Contractor and the producer with whom he has contracted for materials.
(b) The Owner shall have full entry at all reasonable times to such parts of the plant that concern the manufacture or production of the materials being furnished.
(c) If required by the Owner, the Contractor shall arrange for adequate office or working space that may be reasonably needed for conducting plant inspections. Office or working space should be conveniently located with respect to the plant.

It is understood and agreed that the Owner shall have the right to retest any material which has been tested and approved at the source of supply after it has been delivered to the site. The Owner shall have the right to reject only material which, when retested, does not meet the requirements of the contract, plans, or specifications.

60-05 OWNER'S FIELD OFFICE AND LABORATORY. The Owner's field office and laboratory shall be the responsibility of the Contractor or his authorized representative as determined by need by the Owner.

60-06 STORAGE OF MATERIALS. Materials shall be so stored as to assure the preservation of their quality and fitness for the work. Stored materials, even though approved before storage, may again be inspected prior to their use in the work. Stored materials shall be located so as to facilitate their prompt inspection. The Contractor shall coordinate the storage of all materials with the Owner. Private property shall not be used for storage purposes without written permission of the owner or lessee of such property. The Contractor shall make all arrangements and bear all expenses for the storage of materials on private property. Upon request, the Contractor shall furnish the Owner a copy of the property owner's permission.

All storage sites on private property shall be restored to their original condition by the Contractor at his entire expense, except as otherwise agreed to (in writing) by the owner or lessee of the property.

60-07 UNACCEPTABLE MATERIALS. Any material or assembly that does not conform to the requirements of the contract, plans or specifications shall be considered unacceptable and shall be rejected. The Contractor shall remove any rejected material or assembly from the site of the work, unless otherwise instructed by the Owner.

No rejected material or assembly, the defects of which have been corrected by the Contractor, shall be returned to the site of the work until such time as the Owner has approved its use in the work.

60-08 OWNER-FURNISHED MATERIALS. The Contractor shall furnish all materials required to complete the work, except those specified herein (if any) to be furnished by the Owner. Owner-furnished materials shall be made available to the Contractor at the location specified herein.

Control of Material continued...

All costs of handling, transportation from the specified location to the site of work, storage, and installing owner-furnished materials shall be included in the unit price bid for the contract item in which such owner-furnished material is used.

After any owner-furnished material has been delivered to the location specified, the Contractor shall be responsible for any demurrage, damage, loss, or other deficiencies that may occur during the Contractor's handling, storage, or use of such owner-furnished material. The Owner will deduct from any monies due or to become due the Contractor any cost incurred by the Owner in making good such loss due to the Contractor's handling, storage, or use of owner-furnished materials.

SECTION 70

LEGAL RELATIONS AND RESPONSIBILITY TO PUBLIC

70-01 LAWS TO BE OBSERVED. The Contractor shall keep fully informed of all Federal and State laws, all local laws, ordinances, and regulations and all orders and decrees of bodies or tribunals having any jurisdiction or authority, which in any manner affect those engaged or employed on the work, or which in any way affect the conduct of the work. He shall at all times observe and comply with all such laws, ordinances, regulations, orders, and decrees; and shall protect and indemnify the Owner and all his officers, agents, or servants against any claim or liability arising from or based on the violation of any such law, ordinance, regulation, order, or decree, whether by himself or his employees.

Laws and Ordinances: This agreement shall be enforced under the laws of the State of Arizona and Gila County. The Contractor shall maintain in current status all Federal, State and Local licenses and permits required for the operation of the business conducted by the Contractor. The Contractor shall comply with the applicable provisions of the Americans with Disabilities Act (Public Law 101-336, 42 U.S.C. 12101-12213) and applicable federal regulations under the Act.

70-02 PERMITS, LICENSES, AND TAXES. The Contractor shall procure all permits and licenses, pay all charges, fees, and taxes, and give all notices necessary and incidental to the due and lawful prosecution of the work. All costs for any permits, licenses, fees, taxes, or other charges shall be included in the contract price bid.

70-03 PATENTED DEVICES, MATERIALS, AND PROCESSES. If the Contractor is required or desires to use any design, device, material, or process covered by letters of patent or copyright, he shall provide for such use by suitable legal agreement with the patentee or owner. The Contractor and the surety shall indemnify and save harmless the Owner, any third party, or political subdivision from any and all claims for infringement by reason of the use of any patented design, device, material or process, or any trademark or copyright, and shall indemnify the Owner for any costs, expenses, and damages which it may be obliged to pay by reason of an infringement, at any time during the prosecution or after the completion of the work.

70-04 RESTORATION OF SURFACES DISTURBED BY OTHERS. The Owner reserves the right to authorize the construction, reconstruction, or maintenance of any public or private utility service, or a utility service of another government agency at any time during the progress of the work. To the extent that such construction, reconstruction, or maintenance has been coordinated with the Owner, such authorized work (by others) is indicated as follows:

A. Preparatory work on the subgrade by the Owner.

Except as provided above, the Contractor shall not permit any individual, firm, or corporation to excavate or otherwise disturb such utility services or facilities located within the limits of the work without the written permission of the Owner's Engineer.

Should the owner of public or private utility service, or a utility service of another government agency be authorized to construct, reconstruct, or maintain such utility service or facility during the progress of the work, the Contractor shall cooperate with such owners by arranging and performing the work in this contract so as to facilitate such construction, reconstruction or maintenance by others whether or not such work by others is listed above. When ordered as extra work by the Owner's Engineer, the Contractor shall make all necessary repairs to the work which are due to such authorized work by others, unless otherwise provided for in the contract, plans or specifications. It is understood and agreed that the Contractor shall not be entitled to make any claim for damages due to such authorized work by others or for any delay to the work resulting from such authorized work.

70-05 SANITARY, HEALTH, AND SAFETY PROVISIONS. The Contractor shall provide and maintain in a neat, sanitary condition such accommodations for the use of his employees as required to comply with the requirements of the State and local boards of health, or of other bodies or tribunals having jurisdiction. Contractor is responsible for supplying toilet and hand washing facilities at work site.

Attention is directed to Federal, State and local laws, rules and regulations concerning construction safety and health standards. The Contractor shall not require any worker to work in surroundings or under conditions which are unsanitary, hazardous, or dangerous to his health or safety as determined under the Arizona Occupational Safety and Health Standards for Construction, adopted by the Industrial Commission of Arizona pursuant to the Authority in A.R.S. §23-410.

Contractor Safety Tailgate Meetings: Contractor shall conduct tailgate safety meetings regularly to ensure that safety on the job is given priority. Gila County will be represented at each of those informal meetings. Notification shall be given to the County QA/QC Safety Compliance Officer at (928) 402-8506 at least twenty-four (24) hours in advance of the next meeting. Each employee of the Contractor and Sub-Contractor shall read the County Safety & Loss Control Procedures book and sign an acknowledgement.

Accident/Injury Procedure: Contractor shall contact the Owner and the Gila County Risk Management Division within twenty-four (24) hours of the occurrence of an accident or injury arising out of the Contractor's work under this contract.

Unsafe Acts: Contractor employees are encouraged to abate or remedy any unsafe act or condition which may arise in the course of Contractor's work under this contract.

Safety Audits: The County reserves the right to conduct safety audits at the job site and stop unsafe acts at any time. In addition, the County shall be notified should any OSHA inspection occur at a County job site.

70-06 PUBLIC CONVENIENCE AND SAFETY. The Contractor shall control his operations and those of his subcontractors and all suppliers, to assure the least inconvenience to the traveling public. Under all circumstances, safety shall be the most important consideration.

The Contractor shall maintain the free and unobstructed movement of aircraft and/or vehicular traffic with respect to his own operations and those of his subcontractor and all suppliers in accordance with the subsection titled MAINTENANCE OF TRAFFIC of Section 40-05 hereinbefore specified.

70-07 BARRICADES, WARNING SIGNS AND HAZARD MARKINGS. The Contractor shall furnish, erect and maintain all barricades, warning signs, and markings for hazards necessary to protect the public and the work. When used during periods of darkness, such barricades, warning signs and hazard markings shall be suitably illuminated.

For vehicular and pedestrian traffic, the Contractor shall furnish, erect, and maintain barricades, warning signs, lights and other traffic control devices in reasonable conformity with the Manual of Uniform Traffic Control Devices for Streets and Highways (MUTCD Part VI), published by the United States Government Printing Office.

The Contractor shall furnish and erect all barricades, warning signs and markings for hazards prior to commencing work which required such erection and shall maintain the barricades, warning signs, and markings for hazards until their dismantling is directed by the Owner's Engineer.

70-08 PROTECTION AND RESTORATION OF PROPERTY AND LANDSCAPE. The Contractor shall be responsible for the preservation of all public and private property, and shall protect carefully from disturbance or damage all land monuments and property marks until the Contractor's Engineer and the Owner's Engineer has witnessed or otherwise referenced their location and shall not move them until directed.

The Contractor shall be responsible for all damage or injury to property of any character, during the prosecution of the work, resulting from any act, omission, neglect, or misconduct in his manner or method of executing the work, or at any time due to defective work or materials, and said responsibility will not be released until the project shall have been completed and accepted.

When or where any direct or indirect damage or injury is done to public or private property by or on account of any act, omission, neglect, or misconduct in the execution of the work, or in consequence of the non-execution thereof by the Contractor, he shall restore, at his own expense, such property to a condition similar or equal to that existing before such damage or injury was done, by repairing, rebuilding, or otherwise restoring as may be directed, or he shall make good such damage or injury in an acceptable manner.

70-09 RESPONSIBILITY FOR DAMAGE CLAIMS. To the fullest extent permitted by law, Contractor shall defend, indemnify and hold harmless Gila County, and the Pinal Creek Group and their respective agents, representatives, officers, directors, officials, and employees from and against any and all demands, proceedings, suits, actions, claims, damages, or losses relating to, arising out of, resulting from or alleged to have resulted from the performance of the Work. Contractor's duty to defend, indemnify and hold harmless the indemnitee and their respective agents, representatives, officers, directors, officials and employees shall arise in connection with any and all demands, proceedings, suits, actions, claims, workers compensation claims, unemployment claims, damages, losses or expenses (including but not limited to attorneys fees, court costs and the cost of appellate proceedings) that are attributable to personal or bodily injury, sickness, disease, death, or injury to, impairment or destruction of property including the loss of use resulting thereon, caused by any act or omission of the Contractor, a subcontractor, anyone directly or indirectly employed by them or for whose acts they may be liable. The amount and type of insurance coverage requirements set forth in the Contract shall in no way be construed as limiting the scope of this indemnity.

70-10 CONTRACTOR'S INSURANCE. Prior to the execution of the contract, the Contractor shall file with the Owner's Engineer a certificate or certificates of insurance executed by an insurance company doing business in the State of Arizona and acceptable to the Owner's Engineer. The certificate of insurance shall state that, with respect to the contract awarded the Contractor; the Contractor carries insurance in accordance with the requirements of this subsection.

On all policies Gila County shall be named as an additional insured.

All insurance policies or certificates shall include an endorsement providing for thirty (30) days prior written notice to the Owner's Engineer of any cancellation or reduction of coverage. The Contractor shall cease operations on the occurrence of any such cancellation or reduction and shall not resume operations until the required insurance is in force and new certificates of insurance have been filed with the Owner's Engineer. The insurance policy or policies provided by the Contractor may contain deductibles not to exceed $500 for any one accident or occurrence excluding bodily injury.

In addition to statutory Worker's Compensation insurance, the Contractor, with respect to all operations performed by himself or his subcontractors, shall have in force regular public liability insurance in not less than the following amount: **$2,000,000 Combined Single Limit of Liability per Occurrence.**

Such insurance shall include, but not be limited to, coverage for underground damage to facilities because of drilling and excavating with mechanical equipment, and for collapse of or structural injury to structures or utilities because of blasting or explosion, excavation, tunneling, pile driving, cofferdam work or demolition.

With respect to the operation of all motor vehicles, including those hired or borrowed, used in connection with the contract, the Contractor shall have in force automobile liability insurance in not less than the following amount: **$2,000,000 Combined Single Limit of Liability per Occurrence.**

70-11 THIRD PARTY BENEFICIARY CLAUSE. It is specifically agreed between the parties executing the contract that it is not intended by any of the provisions of any part of the contract to create to the public or any member thereof a third party beneficiary or to authorize anyone not a party to the contract to maintain a suit for personal injuries or property damage pursuant to the terms or provisions of the contract.

70-12 OPENING SECTIONS OF THE WORK TO TRAFFIC. Should it be necessary for the Contractor to complete portions of the contract work for the beneficial occupancy of the Owner prior to completion of the entire contract, such "phasing" of the work shall be specified herein and indicated on the plans. When so specified, the Contractor shall complete such portions of the work on or before the date specified or as otherwise specified. The Contractor shall make his own estimate of the difficulties involved in arranging his work to permit such beneficial occupancy by the Owner as described below:

Upon completion of any portion of the work listed above, with certification of the work by the Contractor's Engineer, such portion shall be accepted by the Owner in accordance with the subsection titled PARTIAL ACCEPTANCE of Section 50-14.

No portion of the work may be opened by the Contractor for public use until ordered by the Owner's Engineer in writing. Should it become necessary to open a portion of the work to public traffic on a temporary or intermittent basis, such openings shall be made when, in the opinion of the Owner's Engineer, such portion of the work is in an acceptable condition to support the intended traffic. Temporary or intermittent openings are considered to be inherent in the work and shall not constitute either acceptance of the portion of the work so opened or a waiver of any provision of the contract. Any damage to the portion of the work so opened that is not attributable to traffic which is permitted by the Owner shall be repaired by the Contractor at his expense.

The Contractor shall make his own estimate of the inherent difficulties involved in completing the work under the conditions herein described and shall not claim any added compensation by reason of delay or increased cost due to opening a portion of the contract work.

70-13 CONTRACTOR'S RESPONSIBILITY FOR WORK. Until the Owner's Engineer's final written acceptance of the entire completed work, excepting only those portions of the work accepted in accordance with the subsection titled PARTIAL ACCEPTANCE of Section 50-14, the Contractor shall have the charge and care thereof and shall take every precaution against injury or damage to any part due to the action of the elements or from any other cause, whether arising from the execution or from the non-execution of the work. The Contractor shall rebuild, repair, restore, and make good all injuries or damages to any portion of the work occasioned by any of the above causes before final acceptance and shall bear the expense thereof except damage to the

work due to unforeseeable causes beyond the control of and without the fault or negligence of the Contractor, including but not restricted to acts of God such as earthquake, tidal wave, tornado, hurricane or other cataclysmic phenomenon of nature, or acts of the public enemy or of governmental authorities.

If the work is suspended for any cause whatever, the Contractor shall be responsible for the work and shall take such precautions necessary to prevent damage to the work. The Contractor shall provide for normal drainage and shall erect necessary temporary structures, signs, or other facilities at his expense. During such period of suspension of work, the Contractor shall properly and continuously maintain in an acceptable growing condition all living material in newly established plantings, seedings, and soddings furnished under his contract, and shall take adequate precautions to protect new tree growth and other important vegetative growth against injury.

70-14 CONTRACTOR'S RESPONSIBILITY FOR UTILITY SERVICE AND FACILITIES OF OTHERS. As provided in the subsection titled RESTORATION OF SURFACES DISTURBED BY OTHERS of Section 70-04, the Contractor shall cooperate with the owner of any public or private utility service, or a utility service of another government agency that may be authorized by the Owner to construct, reconstruct or maintain such utility services or facilities during the progress of the work. In addition, the Contractor shall control his operations to prevent the unscheduled interruption of such utility services and facilities and shall notify Blue Stake in accordance with applicable State laws or regulations prior to commencing any work.

It is understood and agreed that the Owner does not guarantee the accuracy or the completeness of the location information relating to existing utility services, facilities, or structures that may be shown on the plans or encountered in the work. Any inaccuracy or omission in such information shall not relieve the Contractor of his responsibility to protect such existing features from damage or unscheduled interruption of service. It is further understood and agreed that the Contractor shall, upon execution of the contract, notify the owners of all utility services or other facilities of his plans of operations. Such notification shall be in writing and addressed to Blue Stake and the respective utility as provided hereinbefore in this subsection and the subsection titled RESTORATION OF SURFACES DISTURBED BY OTHERS of Section 70-04. A copy of each notification shall be given to the Owner's Engineer.

In addition to the general written notification hereinbefore provided, it shall be the responsibility of the Contractor to keep Blue Stake and such individual owners advised of changes in his plan of operations that would affect such owners.

Prior to commencing the work in the general vicinity of an existing utility service or facility, the Contractor shall again notify each such owner of his plan of operation. If, in the Contractor's opinion, the Owner's assistance is needed to locate the utility service or facility or the presence of a representative of the Owner is desirable to observe the work, such advice should be included in the notification. Such notification shall be given by the most expeditious means to reach the utility owner's PERSON TO CONTACT no later than two normal business days prior to the Contractor's commencement of operations in such general vicinity.

The Contractor shall furnish a written summary of the notification to the Owner's Engineer. The Contractor's failure to give the two day's notice hereinabove provided shall be cause for the Owner's Engineer to suspend the Contractor's operations in the general vicinity of a utility service or facility.

Where the outside limits of an underground utility service have been located and staked on the ground, the Contractor shall be required to use excavation methods acceptable to the Owner's Engineer within 3 feet of such outside limits at such points as may be required to insure protection from damage due to the Contractor's operations.

Should the Contractor damage or interrupt the operation of a utility service or facility by accident or otherwise, he shall immediately notify the proper authority and the Owner's Engineer and shall take all reasonable measures to prevent further damage or interruption of service. The Contractor, in such events, shall cooperate with the utility service or facility owner and the Owner's Engineer continuously until such damage has been repaired and service restored to the satisfaction of the utility or facility owner.

The Contractor shall bear all costs of damage and restoration of service to any utility service or facility due to his operations whether or not due to negligence or accident. The contract owner reserves the right to deduct such costs from any monies due or which may become due the Contractor, or his surety.

70-15 FURNISHING RIGHTS-OF-WAY. The Owner will be responsible for furnishing all rights-of-way, permanent easements and temporary construction easements upon which the work is to be constructed in advance of the Contractor's operations.

70-16 PERSONAL LIABILITY OF PUBLIC OFFICIALS. In carrying out any of the contractor provisions or in exercising any power or authority granted to him by this contract, there shall be no liability upon the Owner's Engineer, his authorized representatives, or any official of the Owner either personally or as an official of the Owner. It is understood that in such matters they act solely as agents and representatives of the Owner.

70-17 NO WAIVER OF LEGAL RIGHTS. Upon completion of the work, the Owner will expeditiously make final inspection and notify the Contractor of final acceptance. Such final acceptance, however, shall not preclude or stop the Owner from correcting any measurement, estimate, or certificate made before or after completion of the work, nor shall the Owner be precluded or stopped from recovering from the Contractor or his surety, or both, such overpayment as may be sustained, or by failure on the part of the Contractor to fulfill his obligations under the contract. A waiver on the part of the Owner of any breach of any part of the contract shall not be held to be a waiver of any other or subsequent breach.

The Contractor, without prejudice to the terms of the contract, shall be liable to the Owner for latent defects, fraud, or such gross mistakes as may amount to fraud, or as regards the Owner's rights under any warranty or guaranty.

70-18 ENVIRONMENTAL PROTECTION. The Contractor shall comply with all Federal, State, and local laws and regulations controlling pollution of the environment. He shall take necessary precautions to prevent pollution of streams, lakes, ponds and reservoirs with fuels, oils, bitumen's, chemicals, or other harmful materials and to prevent pollution of the atmosphere from particulate and gaseous matter.

SECTION 80

PROSECUTION AND PROGRESS

80-01 SUBLETTING OF CONTRACT. The Contractor shall not sublet, sell, transfer, assign or otherwise dispose of the contract or contracts or any portion thereof or of his right, title or interest therein without written consent of the Owner's Engineer. In case such consent is given, the Contractor will be permitted to sublet a portion thereof, but shall perform with his own organization work amounting to not less than 50 percent of the total contract amount, except that any items designated in the contract as "Specialty Items" may be performed by subcontract and the cost of any such specialty items so performed by subcontract may be deducted from the total cost before computing the amount of work required to be performed by the Contractor with his own organization. No subcontracts or transfer of contract shall release the Contractor of his liability under the contract and bond.

"His own organization" shall be construed to include only workmen employed and paid directly by the prime contractor and equipment owned or rented by him, with or without operators.

"Specialty Items" shall be construed to be limited to work that requires highly specialized knowledge, craftsmanship or equipment not ordinarily available in contracting organizations qualified to bid on the contract as a whole and in general are to be limited to minor components of the overall contract.

The contract amount upon which the 50 percent requirement is computed includes the cost of materials and manufactured products which are to be purchased or produced by the Contractor under the contract provisions.

Any items that have been selected as "Specialty Items" for the contract will be listed as such in the special provisions, bidding schedule, or elsewhere in the contract documents.

The Owner will not recognize any subcontractor on the work. The Contractor shall at all times when work is in progress be represented either in person, by a qualified superintendent, or by other designated, qualified representative who is duly authorized to receive and execute the orders of the Owner's Engineer.

Should the Contractor elect to assign his contract, said assignment shall be concurred in by the surety, shall be presented for the consideration and approval of the Owner, and shall be consummated only on the written approval of the Owner. In case of approval, the Contractor shall file copies of all subcontracts with the Owner's Engineer.

80-02 NOTICE TO PROCEED. The notice to proceed shall state the date on which it is expected the Contractor will begin the construction and from which date contract time will be charged. The Contractor shall begin the work to be performed under the contract within ten (10) calendar days of the date set by the Owner's Engineer in the written notice to proceed, but in any event, the Contractor shall notify the Owner's Engineer at least two (2) work days in advance of the time actual construction operations will begin.

80-03 PROSECUTION AND PROGRESS. Unless otherwise specified, the Contractor shall submit his progress schedule for the Owner's Engineer's approval within 10 days after the effective date of the notice to proceed. The Contractor's progress schedule, when approved by the Owner's Engineer, may be used to establish major construction operations and to check on the progress of the work. The Contractor shall provide sufficient materials, equipment, and labor to guarantee the completion of the project in accordance with the plans and specifications within the time set forth in the proposal.

If the Contractor falls significantly behind the submitted schedule, the Contractor shall, upon the Owner's Engineer's request, submit a revised schedule for completion of the work within the contract time and modify his operations to provide such additional materials, equipment, and labor necessary to meet the revised schedule. Should the prosecution of the work be discontinued for any reason, the Contractor shall notify the Owner's Engineer at least twenty-four (24) hours in advance of resuming operations.

The Contractor shall not commence any actual construction prior to the date on which the notice to proceed is issued by the Owner.

80-04 CONSTRUCTION LIMITS. Construction limits shall be defined as that area of the public right-of-way, easement or area shown on the construction plans to be disturbed as a part of this contract for this project.

80-05 CHARACTER OF WORKERS, METHODS AND EQUIPMENT. The Contractor shall, at all times, employ sufficient labor and equipment for prosecuting the work to full completion in the manner and time required by the contract, plans and specifications.

All workers shall have sufficient skill and experience to perform properly the work assigned to them. Workers engaged in special work or skilled work shall have sufficient experience in such work and in the operation of the equipment required to perform the work satisfactorily.

Any person employed by the Contractor or by any subcontractor who, in the opinion of the Owner's Engineer, does not perform his work in a proper and skillful manner or is intemperate or disorderly shall, at the written request of the Owner's Engineer, be removed forthwith by the Contractor or subcontractor employing such person, and shall not be employed again in any portion of the work without the approval of the Owner's Engineer.

Should the Contractor fail to remove such person or persons or fail to furnish suitable and sufficient personnel for the proper prosecution of the work, the Owner's Engineer may suspend the work by written notice until compliance with such orders.

All equipment which is proposed to be used on the work shall be of sufficient size and in such mechanical condition as to meet requirements of the work and to produce a satisfactory quality of work. Equipment used on any portion of the work shall be such that no injury to previously completed work, adjacent property, or existing facilities will result from its use.

When the methods and equipment to be used by the Contractor in accomplishing the work are not prescribed in the contract, the Contractor is free to use any methods or equipment that will accomplish the work in conformity with the requirements of the contract, plans and specifications. When the contract specifies the use of certain methods and equipment, such methods and equipment shall be used unless others are authorized by the Owner's Engineer. If the Contractor desires to use a method or type of equipment other than specified in the contract, he may request authority from the Owner's Engineer to do so. The request shall be in writing and shall include a full description of the methods and equipment proposed and of the reasons for desiring to make the change. If approval is given, it will be on the condition that the Contractor will be fully responsible for producing work in conformity with contract requirements. If, after trial use of the substituted methods or equipment, the Owner's Engineer determines that the work produced does not meet contract requirements, the Contractor shall discontinue the use of the substitute method or equipment and shall complete the remaining work with the specified methods and equipment. The Contractor shall remove any deficient work and replace it with work of specified quality, or take such other corrective action as the Owner's Engineer may direct. No change will be made in basis of payment for the contract items involved nor in contract time as a result of authorizing a change in methods or equipment under this subsection.

80-06 TEMPORARY SUSPENSION OF THE WORK. The Owner's Engineer shall have the authority to suspend the work wholly, or in part, for such period or periods as he may deem necessary, due to unsuitable weather, or such other conditions as are considered unfavorable for the prosecution of the work, or for such time as is necessary due to the failure on the part of the Contractor to carry out orders given or perform any or all provisions of the contract.

In the event that the Contractor is ordered by the Owner's Engineer, in writing, to suspend work for some unforeseen cause not otherwise provided for in the contract and over which the Contractor has no control, the Contractor may be reimbursed for actual money expended on the work during the period of shutdown. No allowance will be made for anticipated profits. The period of shutdown shall be computed from the effective date of the Owner's Engineer's order to suspend work to the effective date of the Owner's Engineer's order to resume the work. Claims for such compensation shall be filed with the Owner's Engineer within the time period stated in the Owner's Engineer's order to resume work. The Contractor shall submit with his claim information substantiating the amount shown on the claim. The Owner's Engineer will forward the Contractor's claim to the Owner for consideration in accordance with local laws or ordinances. No provision of this article shall be construed as entitling the Contractor to compensation for delays due to inclement weather, for suspensions made at the request of the Contractor, or for any other delay provided for in the contract, plans or specifications.

If it should become necessary to suspend work for an indefinite period, the Contractor shall store all materials in such manner that they will not become an obstruction nor become damaged in any way. He shall take every precaution to prevent damage or deterioration of the work performed and provide for normal drainage of the work. The Contractor shall erect temporary structures where necessary to provide for the continuous flow of traffic.

80-07 DETERMINATION AND EXTENSION OF CONTRACT TIME. The number of calendar or working days allowed for completion of the work shall be stated in the proposal and contract and shall be known as the CONTRACT TIME.

Should the contract time require extension for reasons beyond the Contractor's control, it shall be adjusted as follows:

(a) CONTRACT TIME (10-13) based on WORKING DAYS (10-41) shall be calculated weekly by the Owner's Engineer. The Owner's Engineer will furnish the Contractor a copy of his weekly statement of the number of working days charged against the contract time during the week and the number of working days currently specified for completion of the contract (the original contract time plus the number of working days, if any, that have been included in approved CHANGE ORDERS (10-10) or SUPPLEMENTAL AGREEMENTS (10-38) covering EXTRA WORK (40-04).

The Owner's Engineer shall base his weekly statement of contract time charged on the following considerations:

(1) No time shall be charged for days on which the Contractor is unable to proceed with the principal item of work under construction at the time for at least 6 hours with the normal work force employed on such principal item. Should the normal work force be on a double-shift, 12 hours shall be used. Should the normal work force be on a triple-shift, 18 hours shall apply. Conditions beyond the Contractor's control such as strikes, lockouts, unusual delays in transportation, temporary suspension of the principal items of work under construction or temporary suspension of the entire work which have been ordered by the Owner's Engineer for reasons not the fault of the Contractor, shall not be charged against the contract time.

(2) The Owner's Engineer will not make charges against the contract time prior to the effective date of the notice to proceed.

(3) The Owner's Engineer will begin charges against the contract time on the first working day after the effective date of the notice to proceed.

(4) The Owner's Engineer will not make charges against the contract time after the date of final acceptance as defined in the subsection titled FINAL ACCEPTANCE of Section 50-15.

(5) The Contractor will be allowed one week in which to file a written protest setting forth his objections to the Owner's Engineer's weekly statement. If no objection is filed within such specified time, the weekly statement shall be considered as acceptable to the Contractor.

The contract time (stated in the proposal) is based on the originally estimated quantities as described in the subsection titled INTERPRETATION OF ESTIMATED PROPOSAL QUANTITIES of Section 20-05.

Should the satisfactory completion of the contract require performance of work in greater quantities than those estimated in the proposal, the contract time shall be increased in the same proportion as the cost of the actually completed quantities bears to the cost of the originally estimated quantities in the proposal. Such increase in contract time shall not consider either the cost of work or the extension of contract time that has been covered by change order or supplemental agreement and shall be made at the time of final payment.

(b) CONTRACT TIME (10-13) based on CALENDAR DAYS (10-09) shall consist of the number of calendar days stated in the contract counting from the effective date of the notice to proceed and including all Saturdays, Sundays, holidays, and non-work days. All calendar days elapsing between the effective dates of the Owner's Engineer's orders to suspend and resume all work, due to causes not the fault of the Contractor, shall be excluded.

At the time of final payment, the contract time shall be increased in the same proportion as the final cost bears to the estimated cost in the proposal. Such increase in the contract time shall not consider either the cost of work or the extension of contract time that has been covered by a change order or supplemental agreement. Charges against the contract time will cease as of the date of final acceptance.

(c) When the contract time is a specified completion date, it shall be the date on which all contract work shall be substantially completed.

If the Contractor finds it impossible for reasons beyond his control to complete the work within the contract time as specified, or as extended in accordance with the provisions of this subsection, he may, at any time prior to the expiration of the contract time as extended, make a written request to the Owner's Engineer for an extension of time setting forth the reasons which he believes will justify the granting of his request. The Contractor's plea that insufficient time was specified is not a valid reason for extension of time. If the Owner's Engineer finds that the work was delayed because of conditions beyond the control and without the fault of the Contractor, he may extend the time for completion in such amount as the conditions justify. The extended time for completion shall then be in full force and effect, the same as though it were the original time for completion.

80-08 FAILURE TO COMPLETE ON TIME. For each calendar day or working day, as specified in the contract, that any work remains uncompleted after the contract time (including all extensions and adjustments as provided in the subsection titled DETERMINATION AND EXTENSION OF CONTRACT TIME of Section 80-07) the sum specified in the contract and proposal as liquidated damages will be deducted from any money due or to become due the Contractor or his surety. Such deducted sums shall not be deducted as a penalty but shall be considered as liquidation of a reasonable portion of damages that will be incurred by the Owner should the Contractor fail to complete the work in the time provided in his contract.

Permitting the Contractor to continue and finish the work or any part of it after the time fixed for its completion, or after the date to which the time for completion may have been extended, will in no way operate as a waiver on the part of the Owner of any of its rights under the contract.

80-09 DEFAULT AND TERMINATION OF CONTRACT. The Contractor shall be considered in default of his contract and such default will be considered as cause for the Owner to terminate the contract for any of the following reasons if the Contractor:

(a) Fails to begin the work under the contract within the time specified in the "Notice to Proceed (80-02)"; or
(b) Fails to perform the work or fails to provide sufficient workers, equipment or materials to assure completion of work in accordance with the terms of the contract; or
(c) Performs the work unsuitably or neglects or refuses to remove materials or to perform anew such work as may be rejected as unacceptable and unsuitable; or
(d) Discontinues the prosecution of the work; or
(e) Fails to resume work which has been discontinued within a reasonable time after notice to do so; or
(f) Becomes insolvent or is declared bankrupt, or commits any act of bankruptcy or insolvency; or
(g) Allows any final judgment to stand against him unsatisfied for a period of 10 days; or
(h) Makes an assignment for the benefit of creditors; or
(i) For any other cause whatsoever, fails to carry on the work in an acceptable manner.

Should the Owner's Engineer consider the Contractor in default of the contract for any reason hereinbefore, he shall immediately give written notice to the Contractor and the Contractor's surety as to the reasons for considering the Contractor in default and the Owner's intentions to terminate the contract.

If the Contractor or surety, within a period of 10 calendar days after such notice, does not proceed in accordance therewith, then the Owner will, upon written notification from the Owner's Engineer of the facts of such delay, neglect, or default and the Contractor's failure to comply with such notice, have full power and authority without violating the contract, to take the prosecution of the work out of the hands of the Contractor. The Owner may appropriate or use any or all materials and equipment that have been mobilized for use in the work and are acceptable and may enter into an agreement for the completion of said contract according to the terms and provisions thereof, or use such other methods as in the opinion of the Owner's Engineer will be required for the completion of said contract in an acceptable manner.

All costs and charges incurred by the Owner, together with the cost of completing the work under contract, will be deducted from any monies due or which may become due the Contractor. If such expense exceeds the sum which would have been payable under the contract, then the Contractor and the surety shall be liable and shall pay to the Owner the amount of such excess.

80-10 TERMINATION FOR NATIONAL EMERGENCIES. The Owner shall terminate the contract or portion thereof by written notice when the Contractor is prevented from proceeding with the construction contract as a direct result of an Executive Order of the President with respect to the prosecution of war or in the interest of national defense.

When the contract, or any portion thereof, is terminated before completion of all items of work in the contract, payment will be made for the actual number of units or items of work completed at the contract price or as mutually agreed for items of work partially completed or not started. No claims or loss of anticipated profits shall be considered.

Reimbursement for organization of the work, and other overhead expenses, (when not otherwise included in the contract) and moving equipment and materials to and from the job will be considered, the intent being that an equitable settlement will be made with the Contractor.

Acceptable materials, obtained or ordered by the Contractor for the work and that are not incorporated in the work shall, at the option of the Contractor, be purchased from the Contractor at actual cost as shown by receipted bills and actual cost records at such points of delivery as may be designated by the Owner's Engineer.

Termination of the contract or a portion thereof shall neither relieve the Contractor of his responsibilities for the completed work nor shall it relieve his surety of its obligation for and concerning any just claim arising out of the work performed.

SECTION 90

MEASUREMENT AND PAYMENT

90-01 MEASUREMENT OF QUANTITIES. All work completed under the contract will be measured by the Contractor's Engineer, certified and furnished to the Owner's Engineer and verified by the Owner or his authorized representatives, using United States Customary Units of Measurement.

The method of measurement and computations to be used in determination of quantities of material furnished and of work performed under the contract will be those methods generally recognized as conforming to good engineering practice.

Unless otherwise specified, longitudinal measurements for area computations will be made horizontally, and no deductions will be made for individual fixtures (or leave-outs) having an area of 9 square feet or less. Unless otherwise specified, transverse measurements for area computations will be the neat dimensions shown on the plans or ordered in writing by the Owner's Engineer.

Structures will be measured according to neat lines shown on the plans or as altered to fit field conditions.

Unless otherwise specified, all contract items which are measured by the linear foot such as pipe culverts, and similar items shall be measured parallel to the base or foundation upon which such items are placed.

In computing volumes of excavation the average end area method or other methods acceptable to the Owner's Engineer, will be used.

Areas of materials paid for by area shall be measured using the centerline length of the facility multiplied by the lesser of the average actual or plan dimensions perpendicular to centerline. Actual width shall be measured at random locations along the length of the project, with an average of two measurements per station. Volumes of materials in place shall be determined by multiplying the area by the lesser of the plan or actual average thickness of the material. Materials in a structural section such as aggregate base shall be not less than the specified thickness.

The thickness of plates and galvanized sheet used in the manufacture of corrugated metal pipe, metal plate pipe culverts and arches, and metal cribbing will be specified and measured in decimal fraction of inches.

The term "ton" will mean the short ton consisting of 2,000 pound avoirdupois. All materials which are measured or proportioned by weights shall be weighed on accurate, approved scales by competent, qualified personnel at locations designated by the Owner's Engineer.

If material is shipped by rail, the car weight may be accepted provided that only the actual weight of material be paid for. However, car weights will not be acceptable for material to be passed through mixing plants.

Trucks used to haul material being paid for by weight shall be weighed empty at least twice daily at such times as the Owner's Engineer directs, and each truck shall bear a plainly legible identification mark. Such empty weights shall be recorded with the time and truck identification on a Tare Sheet. Copies of each days Tare Sheets and the current scale certification shall be furnished to the Owner's Engineer with the pay request.

Materials **SHALL NOT** be measured by volume in the hauling vehicle unless approved in writing in advance by the Owner's Engineer.

When requested by the Contractor and approved by the Owner's Engineer in writing, material specified to be measured by the cubic yard may be weighed and such weights will be converted to cubic yards for payment purposes. Factors for conversion from weight measurement to volume measurement will be determined by the Owner's Engineer and shall be agreed to by the Contractor before such method of measurement of pay quantities is used.

Bituminous materials will be measured by the gallon or ton. When measured by volume, such volumes will be measured at 60 degrees F. or will be corrected to the volume at 60 degrees F. using ASTM D 1250 for asphalts or ASTM D 633 for tars.

Net certified scale weights or weights based on certified volumes in the case of rail shipments will be used as a basis of measurement, subject to correction when bituminous material has been lost from the car or the distributor, wasted, or otherwise not incorporated in the work.

When bituminous materials are shipped by truck or transport, net certified weights by volume, subject to correction for loss or foaming, may be used for computing quantities.

Portland cement, fly ash and lime will be measured by the ton or hundredweight.

Timber will be measured by the thousand feet board measure (M.F.B.M.) actually incorporated in the structure. Measurement will be based on nominal widths and thickness and the extreme length of each piece.

The term "lump sum" when used as an item of payment will mean complete payment for the work described in the contract. Contractor shall furnish a fee schedule to the Owner's Engineer at the preconstruction conference for all professional service lump sum items such as construction surveying and materials testing.

When a complete structure or structural unit (in effect, "lump sum" work) is specified as the unit of measurement, the unit will be construed to include all necessary fittings and accessories.

Measurement & Payment continued...

Rental of equipment will be measured by time in hours of actual working time and necessary traveling time of the equipment within the limits of the work. Special equipment ordered by the Owner's Engineer in connection with force account work will be measured as agreed in the change order or supplemental agreement authorizing such force account work as provided in the subsection titled PAYMENT FOR EXTRA AND FORCE ACCOUNT WORK of Section 90-05.

When standard manufactured items are specified such as fence, wire, plates, rolled shapes, pipe conduit, etc., and these items are identified by gauge, unit weight, section dimensions, etc., such identification will be considered to be nominal weights or dimensions. Unless more stringently controlled by tolerances in cited specifications, manufacturing tolerances established by the industries involved will be accepted.

Scales for weighing materials which are required to be proportioned or measured and paid for by weight shall be furnished, erected, and maintained by the Contractor, or by certified permanently installed commercial scales. Scales shall be accurate within one-half per cent of the correct weight throughout the range of use. The Contractor shall have the scales checked under the observation of the inspector before beginning work and at such other times as requested. The intervals shall be uniform in spacing throughout the graduated or marked length of the beam or dial and shall not exceed one-tenth of one per cent of the nominal rated capacity of the scale, but not less than one pound. The use of spring balances will not be permitted.

Beams, dials, platforms, and other scale equipment shall be so arranged that the operator and inspector can safely and conveniently view them.

Scale installations shall have available, ten standard fifty-pound weights for testing the weighing equipment or suitable weights and devices for other approved equipment.

Scales must be tested for accuracy and serviced before use at a new site. Platform scales shall be installed and maintained with the platform level and rigid bulkheads at each end.

Scales "overweighing" (indicating more than correct weight) will not be permitted to operate and all materials received subsequent to the last previous correct weighing-accuracy-test will be reduced by the percentage of error in excess of one-half of one per cent.

In the event inspection reveals the scales have been "under-weighing" (indicating less than correct weight) they shall be adjusted and no additional payment to the Contractor will be allowed for materials previously weighed and recorded.

All costs in connection with furnishing, installing, certifying, testing, and maintaining scales: for furnishing check weights and scale house; and for all other items specified in this subsection, for the weighing of materials for proportioning or payment, shall be included in the unit contract prices for the various items of the project.

When the estimated quantities for a specific portion of the work are designated as pay quantities in the contract, they shall be the final quantities for which payment for such specific portion of the work will be made, unless the dimensions of said portions of the work shown on the plans are revised by the Owner's Engineer. If revised dimensions result in an increase or decrease in the quantities of such work, the final quantities for payment will be revised in the amount represented by the authorized changes in the dimensions.

90-02 SCOPE OF PAYMENT. The Contractor shall receive and accept compensation provided for in the contract as full payment for furnishing all materials, for performing all work under the contract in a complete and acceptable manner, and for all risk, loss, damage, or expense of whatever character arising out of the nature of the work or the prosecution thereof, subject to the provisions of the subsection titled NO WAIVER OF LEGAL RIGHTS of Section 70-17.

When the "basis of payment" subsection of a technical specification requires that the contract price (price bid) include compensation for certain work or material essential to the item, this same work or material will not also be measured for payment under any other contract item which may appear elsewhere in the contract, plans or specifications.

Periodic progress payments shall be in accordance with A.R.S. §34-221.

90-03 COMPENSATION FOR ALTERED QUANTITIES. When the accepted quantities of work vary from the quantities in the proposal, the Contractor shall accept as payment in full, so far as contract items are concerned, payment at the original contract price for the accepted quantities of work actually completed and accepted. No allowance, except as provided for in the subsection titled ALTERATION OF WORK AND QUANTITIES of Section 40-02 will be made for any increased expense, loss of expected reimbursement, or loss of anticipated profits suffered or claimed by the Contractor which results directly from such alterations or indirectly from his unbalanced allocation of overhead and profit among the contract items, or from any other cause.

90-04 PAYMENT FOR OMITTED ITEMS. As specified in the subsection titled OMITTED ITEMS of Section 40-03, the Owner's Engineer shall have the right to omit from the work (order nonperformance) any contract item, except major contract items, in the best interest of the Owner.

Should the Owner's Engineer omit to order nonperformance of a contract item or portion of such item from the work, the Contractor shall accept payment in full at the contract prices for any work actually completed and acceptable prior to the Owner's Engineer's order to omit or non-perform such contract item.

Acceptable materials ordered by the contract or delivered on the work prior to the date of the Owner's Engineer's order will be paid for at the actual cost to the Contractor and shall thereupon become the property of the Owner.

In addition to the reimbursement hereinbefore provided, the Contractor shall be reimbursed for all actual costs incurred for the purpose of performing the omitted contract item prior to the date of the Owner's Engineer's order. Such additional costs incurred by the Contractor must be directly related to the deleted contract item and shall be supported by certified statements by the Contractor as to the nature and amount of such costs.

90-05 PAYMENT FOR EXTRA AND FORCE ACCOUNT WORK. Extra work, performed in accordance with the subsection titled EXTRA WORK of Section 40-04, will be paid for at the contract prices or agreed prices specified in the change order or supplemental agreement authorizing the extra work requiring that it be done by force account, such force account shall be measured and paid for as follows:

(a) Labor. For all labor (skilled and unskilled) and foremen in direct charge of a specific force account item, the Contractor shall receive the rate of wage (or scale) for every hour that such labor or foreman is actually engaged in the specified force account work. Such wage (or scale) shall be agreed upon in writing before beginning the work.

The Contractor shall receive the actual costs paid to, or in behalf of, workers by reason of subsistence and travel allowances, health and welfare benefits, pension fund benefits or other benefits, when such amounts are required by collective bargaining agreement or other employment contract generally applicable to the classes of labor employed on the work. An amount equal to 15 percent of the sum of the above items will also be paid the Contractor.

(b) Insurance and Taxes. For property damage, liability and workmen's compensation insurance premiums, unemployment insurance contributions, and social security taxes on the force account work the Contractor shall receive the actual cost, to which cost (sum) 5 percent will be added. The Contractor shall furnish satisfactory evidence of the rate or rates paid for such insurance and taxes.

(c) Materials. For materials accepted by the Owner's Engineer and used, the Contractor shall receive the actual cost of such materials delivered on the work, including transportation charges paid by him (exclusive of machinery rentals as hereinafter set forth), to which cost (sum) 15 percent will be added.

(d) Equipment. For any machinery or special equipment (other than small tools) including fuel and lubricants, plus transportation costs, the use of which has been authorized by the Owner's Engineer, the Contractor shall receive the rental rates in the current "Blue Book for Construction Equipment".

(e) Miscellaneous. No additional allowance will be made for general superintendence, the use of small tools, or other costs for which no specific allowance is herein provided.

(f) Comparison of Records. The Contractor and the Owner's Engineer shall compare records of the cost of force account work at the end of each day. Agreement shall be indicated by signature of the Contractor and Owner's Engineer or their duly authorized representatives.

(g) Statements. No payment will be made for work performed on a force account basis until the Contractor has furnished the Owner's Engineer with duplicate itemized statements of the cost of such force account work detailed as follows:

(1) Name, classification, date, daily hours, total hours, rate and extension for each laborer and foreman.
(2) Designation, dates, daily hours, total hours, rental rate and extension for each unit of machinery and equipment.
(3) Quantities of material, prices, and extensions.
(4) Transportation of materials.
(5) Cost of property damage, liability and workmen's compensation insurance premiums, unemployment insurance contribution and social security tax.

Statements shall be accompanied and supported by receipted invoice for all materials used and transportation charges. However, if materials used on the force account work are not specifically purchased for such work but are taken from the Contractor's stock, then in lieu of the invoices the Contractor shall furnish an affidavit certifying that such materials were taken from his stock, that the quantity claimed, was actually used, and that the price and transportation claimed represent the actual cost to the Contractor.

The additional payment, based on the percentages specified above, shall constitute full compensation for all items of expense not specifically provided for in the force account work. The total payment made as provided above shall constitute full compensation for such work.

90-06 ACCEPTANCE AND FINAL PAYMENT. When the contract work has been accepted in accordance with the requirements of the subsection titled FINAL ACCEPTANCE of Section 50-15, the Owner's Engineer will prepare the final estimate of the items of work actually performed. The Contractor shall approve the Owner's Engineer's final estimate or advise the Owner's Engineer of his objections to the final estimate which are based on disputes in measurements or computations of the final quantities to be paid under the contract as amended by change order or supplemental agreement. The Contractor and Owner's Engineer shall resolve all disputes (if any) in the measurement and computation of final quantities to be paid within 30 calendar days of the Contractor's receipt of the Owner's Engineer's final estimate. If, after such 30-day period, a dispute still exists, the Contractor may approve the Owner's Engineer's estimate under protest of the quantities in dispute and such disputed quantities shall be considered by the Owner as a claim in accordance with the subsection titled CLAIMS FOR ADJUSTMENT AND DISPUTES of Section 50-16.

Measurement & Payment continued...

After the Contractor has approved, or approved under protest, the Owner's Engineer's final estimate, final payment will be processed based on the entire sum, or the undisputed sum in case of approval under protest, determined to be due the Contractor less all previous payments and all amounts to be deducted under the provisions of the contract. All prior partial estimates and payments shall be subject to correction in the final estimate and payment.

Contractor shall provide an executed Affidavit of Release of Liens and an Affidavit of Payment to the Owners Engineer prior to the release of the final payment.

If the Contractor has filed a claim for additional compensation under the provisions of the subsection titled CLAIMS FOR ADJUSTMENTS AND DISPUTES of Section 50-16 or under the provisions of this subsection, such claims will be considered by the Owner in accordance with local laws or ordinances. Upon final adjudication of such claims, any additional payment determined to be due the Contractor will be paid pursuant to a supplemental, final estimate.

SPECIAL PROVISIONS

SP-1 TO SP-7

SPECIAL PROVISIONS

RUSSELL ROAD RECONSTRUCTION PROJECT

1. PROPOSED WORK

The work consists of clearing and grubbing, removal of existing structures (e.g., asphaltic pavement, drainage pipe,...etc.) interfering with the work, installation of: miscellaneous items, masonry walls, corrugated metal pipe, dumped rock riprap, gabion systems, asphaltic concrete pavement, aggregate base course, utility trench and other work as shown within the plans.

2. GENERAL REQUIREMENTS

The project has been designed utilizing the Arizona Department of Transportation (ADOT) Construction Standard Drawings (Latest Series), and 2008 Standard Specifications, with appropriate current revisions along with Uniform Standard Specifications for Public Works Construction (Latest Edition and Revisions), Maricopa Association of Governments. Wherever reference in the Standard Specifications is made to MAG, ADOT, the Owner, or the Department: it shall refer to Gila County.

In the event of any conflict between the plans and Standard Specifications, the plans shall prevail. In the event of any conflict between these Special Provisions and the plans or Standard Specifications, these Special Provisions shall prevail.

The following STANDARD SPECIFICATIONS and/or details are considered a part of these Contract Documents and are considered as binding as if actually attached hereto:

- Arizona Department of Transportation, Highways Division, Standard Specifications for Road and Bridge Construction, Edition of 2008,
- Arizona Department of Transportation, Highways Division, Standard Drawings, listed in the project plans and defined hereinafter,
- Manual on Uniform Traffic Control Devices, Millennium Edition, and Amendments.
- Uniform Standard Specifications for Public Works Construction (Latest Edition and Revisions). Maricopa Association of Governments.
- Arizona Water Company Specifications and Standard Details, April 2004.

3. POINTS AND INSTRUCTION AND AS-BUILTS

The Contractor will furnish and set control stakes and points for line and grade and will furnish the Engineer with the necessary information relating to such stakes and points.

The Contractor will provide such intermediate stakes as he may need to set to comply with these Specifications.

The Contractor shall carefully preserve benchmarks, reference points and stakes, and in case of willful or careless destruction, he shall be charged with the resulting expense of replacement, and shall be responsible for any mistakes that may be caused by their unnecessary loss or disturbance.

~~In the event that it is necessary for the OWNER to duplicate his work because of acts of~~ omission or negligence on the part of the Contractor, or because of the removal of defective work, such additional cost of engineering shall be borne by the Contractor.

When the work is completed, the Contractor shall provide the OWNER with a set of as-built drawings on clean prints of the original drawings. The as-built drawings shall indicate in a neat and accurate manner all changes and revisions in the original design which affect the permanent structures and which exist in the completed work. All underground utilities relocated under this contract shall be referenced to semi-permanent or permanent physical objects.

The alterations and references shall be made with colored ink and shall be sufficiently clear and complete to enable reproducing these changes on the original tracings. The Engineer will document these changes on the original tracings and forward the tracings to the Contractor for review and signature. The registered Professional Land Surveyor who performed the Final Survey shall certify the As-Built information by signing and sealing the tracings for the Contractor. Final payment of this contract will not be made to the Contractor until the As-Built drawings are satisfactorily produced and certified.

As-Built conditions shall be kept current. They shall be inspected for accuracy and completeness monthly. The Contractor shall certify on his monthly payment requisition that the drawings are accurate and complete before the monthly payment estimate will be prepared and approved.

4. CONSTRUCTION LIMITS

The Contractor shall not disturb any vegetation or operate any equipment outside the approved clearing limits as defined in ADOT Standard Specifications, Section 201 - Clearing and Grubbing and as specified in the Technical Specifications. These limits shall be known as the Construction Limits. Deviation outside these limits is not authorized.

The Owner shall provide land, right-of-way, and easements for all work specified in this contract, except that the Contractor shall provide additional land if required for the erection of temporary construction facilities for storage of his material, together with right of access to same. The Contractor shall not enter or occupy with men, tools, equipment or materials, any private property without written consent of the Owner thereof.

The Contractor shall submit at the preconstruction conference a map showing the proposed location of his Contractor's yard. The location of the yard is subject to the approval of the Owner. The Contractor is responsible for the security of his yard and the equipment and materials stored at the yard or construction site. Damage, theft, vandalism, or loss of such equipment or materials is the responsibility of the Contractor. The Contractor will not be compensated for replacement, repair, or refusal of materials by the Engineer damaged by vandalism or theft. The Contractor will take whatever measures are necessary to secure his yard, equipment, and materials. Security measures such as yard fences, security guards, locks, chains, etc. are incidental to the work for this project.

5. OPERATION AND TRAFFIC CONTROL PLANS

The Contractor shall submit to the Owner for approval his proposed sequence of operations and a compatible method of maintaining traffic as described in ADOT Section 107 of the Standard Specifications and the Technical Provisions. The Contractor shall submit to the Owner a Traffic Control Plan sealed by an Arizona registered Professional Civil Engineer. The proposal and plan shall be submitted at the preconstruction conference. The Owner shall notify the Contractor of any required changes to the proposal/plan and the Contractor shall address any and all revisions. The Contractor shall be aware that the Owner shall require that Russell Road, between Roberts Road and Besich Boulevard shall remain closed to through traffic, from the commencement of construction until the final surface course (ACFC) has been completely installed allowing for local access only.

6. QUALITY CONTROL PLAN AND WEEKLY REPORTS

The Contractor shall submit to the Engineer for review and approval his Quality Control Plan. The plan shall include, but not be limited to, individual test item costs, and testing frequency. The plan shall be submitted at the preconstruction conference.

Failure of the Contractor to submit Weekly Quality Control Reports, current to the most recent submittal date, will be grounds for the Engineer to withhold payment on a monthly basis until compliance is attained. Withheld payments on which requirements have been met will be made on the next regular estimate.

7. SAMPLING AND TESTING

All testing and sampling as specified herein shall be performed by a geotechnical laboratory. Unless otherwise specified, the cost of the laboratory testing, heavy equipment rental and labor incident to practical tests specified shall be at the Owner's expense.

The Contractor shall notify, during the preconstruction conference, the Owner of the proposed sources of all materials required by the Specifications to be tested. Before work starts sufficient time shall be allowed for the taking of samples and completing tests required.

For the verification of weights and character of materials, the Owner shall have access at all reasonable times to all parts of the work, plants, and assembly yards connected with the work. The Contractor shall facilitate and assist in the verification of all scales, measures and other devices, which he operates. Reference to ASTM and other Standard Specifications shall be considered to mean current standards. If it is found that sources of supply that have been approved do not furnish a uniform product, or if the product from any source proves unacceptable at any time, the Contractor shall furnish approved material from other approved sources. No material which, after approval, has in any way become unfit for use shall be used in the work. The approval of any material represented by any sample or samples shall not be taken as a guarantee of all materials from the source; and it shall be understood that all materials delivered to the site are subject to test at any time and will be rejected if they do not meet the requirement of the Specifications.

8. MEASUREMENT AND PAYMENT

Measurement will be in place for the completed work, with no allowance for waste, and as may be more particularly described in the description of the various items set forth in the Standard Specifications and as shown on the plans. All earthwork, fill and excavation, submitted for payment shall be certified by an Arizona registered Professional Land Surveyor in support of the work performed by the Contractor.

No additional payments will be made for work related to any item unless specifically noted and called for in the Proposal. Payment will be made at the unit price or lump sum price bid in the Proposal.

In addition to the requirements set forth in the ADOT Standard Specifications, no measurement or direct payment will be made for the following work. The cost for such work shall be considered as included in the price of other contract items.

A. Removal and salvage items as called for on the plans, in the Standard Specifications, or these Special Provisions.
B. Removal, salvage and/or re-installation of existing fence lines.
C. Sampling, testing, certification, and other quality control actions.
D. Disposal of surplus, waste or non-salvageable materials.
E. Grading of drainage ditches and drainage excavation not called out on the plans.
F. Preparation and submittal of operation, traffic control, and storm water pollution prevention plans, whether specified herein or required by the other agencies.
G. Obtaining and maintaining any required environmental and/or other permits and licenses.

The quantities set forth in the Proposal are used for the purpose of determining the basis of the award of the Contract, and may be increased or decreased 10% or less by the Owner to conform to the requirements of the work as set forth on the plans, and the Contractor shall agree to perform the work on the basis of the prices bid for the items contained in the Proposal regardless of whether or not the items or units are decreased or increased.

The Engineer or the Owner shall have the right to order omitted from the Contract any minor item found unnecessary to the work without violating the Contract or Performance Bond, and without any compensation to the Contractor.

To ensure the Contractor's satisfactory performance of the Contract, progress payments shall be subject to retainage pursuant to A.R.S. §34-221 in the amount of 10% of the approved estimate of the Work performed in the preceding calendar month. When the Work is 50% complete, the retainage shall be reduced to 5% so long as the Contractor is making satisfactory progress. If the Owner determines in writing that the Contractor is not making satisfactory progress at any time, the 10% retainage may be reinstated. In lieu of retainage, the Contractor may post substitute security meeting the requirements of A.R.S. §34-221.

9. HAUL ROUTE

The Contractor is to submit haul routes to the Owner for approval.

10. DUST CONTROL

The Contractor shall use all methods in the control of dust as set forth by A.R.S. §49-401 and the ADOT Standard Specifications Section 207. The cost thereof is to be included in the unit construction cost.

11. TEMPORARY CONSTRUCTION EASEMENTS

Temporary construction easements are not required for this project.

12. OWNER'S FIELD OFFICE

The Owner's field office, as called for under Section 60-05 of the General Provisions, shall not be required of the Contractor for this project.

13. BLASTING NOTIFICATION

Blasting shall not be permitted within any portion of the project at any time.

14. CONFLICTING UTILITY SYSTEMS

The Contractor shall be aware that within the project limits there are utility systems that may conflict with the proposed work. The Contractor is not responsible for resolving these conflicts unless otherwise noted within the plans. Such shall be the sole responsibility of each individual utility owner. However, the Contractor shall coordinate directly with each utility owner to insure that the work progresses and notify the Owner on all matters. A list of all known utility owner contact names and phone numbers is shown within the plans.

The Contractor shall be aware of several utility systems existing within and adjacent to the project limits. The Contractor shall be responsible for any damage to the utilities. The Contractor shall be aware of overhead utility lines along, near and crossing roadways within and/or adjacent to the project limits. The Contractor shall be responsible for any damage to any overhead utilities or their support structures.

15. DISPOSAL OF REMOVED VEGETATION OR UNSUITABLE MATERIALS

The Contractor shall dispose all removed vegetation and/or any unsuitable materials in a location as designated or approved by the Public Works Director. Disposal of said material in another location(s) shall be submitted to the OWNER for approval prior to disposal activities.

16. ARIZONA PUBLIC SERVICE

The Contractor shall be responsible for all work associated with the Arizona Public Service (APS) power line relocation as shown within the APS documents that are considered as part of the Contract for this project. C.L. Williams Consulting Inc. has located, as best as possible, the horizontal layout of the required utility trenches, however, the Contractor shall confirm the final location with APS prior to construction.

TECHNICAL SPECIFICATIONS

T-1 TO T-12

TECHNICAL SPECIFICATIONS

RUSSELL ROAD RECONSTRUCTION PROJECT
GLOBE, ARIZONA

201 CLEARING AND GRUBBING

Clearing and Grubbing shall be in accordance with Section 201 of the ADOT Standard Specifications unless modified herein.

201-1 Description: the first paragraph is revised to read:

The work under this section shall consist of removing and disposing of all vegetation, rubbish, trees, debris and other objectionable matter only from those areas required to install the proposed work unless otherwise shown on the plans or specified in the Special Provisions.

201-2 Removal of Disposal Materials: the first paragraph is revised to read:

All materials removed in clearing and grubbing shall be disposed of in locations subject to the OWNER's approval prior to said disposal. Disposal of materials within the project right-of-way or within the project limits is not permitted.

201-4 Method of Measurement: is revised to read:

No measurement shall be made for Clearing and Grubbing.

201-5 Method of Payment: first paragraph is revised to read:

The accepted quantities of clearing and grubbing, including all necessary trees, the cost thereof shall be as shown within the bid proposal.

202 REMOVAL OF STRUCTURES AND OBSTRUCTIONS

Removal of Structures and Obstructions shall be in accordance with Section 202 of the ADOT Standard Specifications unless modified herein.

203 EARTHWORK

Earthwork shall be in accordance with Section 203 of the ADOT Standard Specifications unless modified herein.

209 FURNISH WATER:

Furnish Water shall be done in accordance with Section 209 of the ADOT Standard Specifications unless modified herein.

209-1 Description: add the following paragraph.

Water shall be free of contaminants that in the opinion of the Owner or Owner's Engineer constitute a health hazard.

206-4 Method of Measurement: is revised to read:

No measurement or payment will be made for furnish water, the cost being considered as included in the cost of other contract items.

206-5 Basis of Payment: is revised to read:

No measurement or payment will be made for furnish water, the cost being considered as included in the cost of other contract items.

211 FILL CONSTRUCTION

Fill Construction shall be in accordance with Section 211 of the MAG Standard Specifications unless modified herein or stated within the plans.

301 SUBGRADE PREPARATION

Subgrade Preparation shall be in accordance with Section 301 of the MAG Standard Specifications unless modified herein or stated within the plans.

301-1 Description: the first sentence of the first paragraph is revised to read:

This section shall govern the preparation of natural or excavated areas prior to the placement of sub-base material, rock riprap, pavement, curbs and gutters, driveways, sidewalks or other structures.

301-3 Relative Compaction: add the following line:

(D) Subgrade for Rock RipRap ..... 85 percent

303 AGGREGATE SUBBASES AND AGGREGATE BASES

Aggregate Base Course shall be Class II in accordance with Section 303 of the ADOT Standard Specifications unless modified herein.

321 ASPHALT CONCRETE PAVEMENT

Asphaltic Concrete Pavement shall be in accordance with Section 321 of the MAG Standard Specifications unless modified herein. For Russell Road, the pavement structural section (upper section) shall require one single 3-inch lift (i.e., layer).

321-13 Payment: add the following:

The term "bituminous material" as used herein shall include asphalt cement, liquid asphalt, and emulsified asphalt.

The contract unit price for each item of bituminous material will be considered to include all costs for furnishing, hauling, handling, spreading, and mixing of the material as required, including the "initial cost" of bituminous material, but excluding any difference in the cost of bituminous material that occurs between the date of bid opening and the date that the material is used on the project.

A cost for bituminous material will be determined monthly by the Arizona Department of Transportation (herein referred to as the "Department") based on the selling prices of asphalt cement published by the Asphalt Weekly Monitor, a publication of Poten & Partners, Inc. The cost will be the arithmetic average of the high and low selling prices for asphalt cement shown in the previous four reports for the Arizona/Utah and Southern California regions.

This cost will be deemed the "initial cost" (IC) for bituminous material for projects on which bids are opened during the following month. This cost will also be deemed the "current price" (CP) for bituminous material for the following month for projects in construction.

This value will be made known by means of a memorandum issued on the last Wednesday of each month issued by Gila County.

For each item of bituminous material for which there is a specific pay item, and for the bituminous material used in Asphaltic Concrete items (pavement and friction course), an adjustment will be made as follows for each month that a quantity of bituminous material was used on the project.

The "initial cost" (IC) for the month in which the project was bid will be compared with the "current price" (CP) as specified above for the appropriate current month. The "current price" (CP) will be as shown in the memorandum issued on the last Wednesday of each month, and will be used to adjust costs for bituminous material incorporated into the job during the following month (for example; bituminous material used in May will be adjusted, as specified herein, based on the "current price" (CP) for May as shown in the memorandum issued on the last Wednesday of April). Any difference in price between these two values will be applied to the quantity of eligible bituminous material incorporated into the work.

Determination of the eligible quantities of bituminous material will be based on contractor furnished- invoices, except as modified below.

The tons of emulsified products to which the adjustment will be applicable will be the tons of the emulsified bituminous asphalt prior to dilution.

Adjustments in compensation for emulsified asphalts will be made at 60 percent of either the increase or decrease.

The tons of bituminous material incorporated in Asphaltic Concrete items (pavement and friction course) to which an adjustment will be applicable will be considered to equal five percent of the quantity, measured in tons, of Asphaltic Concrete items (pavement and friction course) placed, regardless of the actual percentage of bituminous material incorporated into the mix. If the quantity of Asphaltic Concrete items (pavement and friction course) is measured by volume, the supplemental agreement establishing the method of measurement will specify the manner in which the tons of asphalt cement eligible for the adjustment are determined.

The tons of bituminous materials which are paid for on the basis of testing by nuclear asphalt content gauge, ignition furnace, or other approved methods to which the adjustment will be applicable, are the tons which have been incorporated into the mixture.

No additional compensation will be made for any additional or increased charges, costs, expenses, taxes, etc., which the contractor may have incurred since the time of bidding and which may be the result of any increase in the "initial cost" of bituminous material.

Adjustment in unit prices of items governed by this provision will be made in the next regular monthly progress payment following actual use or application of the bituminous material.

Any adjustment in compensation made for bituminous material incorporated into the work after the expiration of the specified completion time set forth in the contract, or as may be extended in accordance with the provisions of bid document, will be on the basis of the price of bituminous material shown in the memorandum applicable on the date of the expiration of the specified completion time, as hereinbefore specified.

340 CONCRETE CURB, GUTTER, SIDEWALK, SIDEWALK RAMPS, DRIVEWAY AND ALLEY ENTRANCE

Concrete curb, gutter, sidewalk, sidewalk ramps, driveway, valley gutters and alley entrances shall be in accordance with Section 340 of the MAG Standard Specifications unless modified herein.

340-2 Materials: of the Standard Specifications add the following:

All concrete shall be color tinted using Davis-Color /mix ready/ dry/ color group standard/ San Diego Buff # 5237 mixed per the manufactures recommendations.

411 ASPHALT CONCRETE FRICITION COURSE

Asphaltic Concrete Friction Course shall be in accordance with Section 411 of the ADOT Standard Specifications unless modified herein.

411-2.05 Proportions: revised to read:

The asphalt cement content and type will be determined by the laboratory responsible for pavement mix design and will submit the recommended mix design to the Owner for approval prior to delivery and/or installation.

520 STEEL AND ALUMINUM HANDRAILS

Steel and Aluminum Handrails shall be in accordance with Section 520 of the MAG Standard Specifications unless modified herein or within the plans.

525 PNUEMATICALLY PLACED MORTAR

Pneumatically placed mortar (a.k.a. shotcrete) shall be in accordance with Section 525 of the MAG Standard Specifications unless modified herein.

525.1 Description: add the following sentence:

Concrete shall be color tinted using Davis-Color /mix Ready/ dry/ color group standard/ San Diego Buff #5237 mixed per the manufacture's recommendation.

525.6 Surface Preparation: add the following paragraph:

On sloped faces taller than 24 inches, weep holes shall be constructed at intervals of ten feet (10') midway between contraction joints on each side of the sloped shotcrete. Weep holes shall be constructed using perforated 4-inch (4") diameter, schedule 40, polyvinyl chloride (PVC) pipe. The pipe shall be cut to fit the finish slope of the sloped shotcrete face and shall be placed at an elevation of one foot (1') above the toe of the slope. The pipe perforations shall be a minimum of one (1) square inch per linear foot of pipe. The weep holes shall be backed by a minimum of two (2) cubic feet of aggregate material tied in a burlap bag. The aggregate shall extend at least six inches (6") above and below and to each side of the weep hole, and at least twenty four (24") inches into the side slope. The side and back of the burlap bag shall be protected from being coated by concrete during the placing operation by a suitable means approved by the Owner. On the day following concrete placement, each weep hole shall be rodded to assure that it has not been blocked.

525.8 Joints: the first sentence of the second paragraph is revised to read:

The Contractor shall install control joints at 10-foot spacing both vertically and horizontally.

525.11 Testing: add the following paragraph:

Shotcrete channels having a slope of 0.8 foot per hundred feet or less, or where unusual or special conditions cast doubt on the capability of the gutters to drain, shall be water tested. Water testing shall consist of establishing flow in the length of channel to be tested by supplying water from a hydrant, tank truck or other source. One hour after the supply of water is shut off, the channel shall be inspected for evidence of ponding or improper shape. In the event water is found ponded in the channel to a depth greater than ½ inch, the defect or defects shall be corrected in a manner acceptable to the Engineer without additional cost to the Owner.

607 ROADSIDE SIGN SUPPORTS

Roadside Sign Supports shall be in accordance with Section 607 of the ADOT Standard Specifications unless modified herein.

608 SIGN PANELS

Sign Panels shall be in accordance with Section 608 of the ADOT Standard Specifications unless modified herein. Unless otherwise noted within the plans all sheeting shall be per ADOT Traffic Engineering PGP, Section 380, latest edition.

621 CORRUGATED METAL PIPE AND ARCHES

Corrugated Metal Pipe and Arches shall be in accordance with Section 621 of the MAG Standard Specifications unless modified herein.

701 MAINTENANCE AND PROTECTION OF TRAFFIC

Maintenance and Protection of Traffic shall be in accordance with Section 701 of the ADOT Standard Specifications, except as modified herein.

701-1 Description: add the following:

Prior to construction, the Contractor shall close Russell Road, between Roberts Road and Besich Boulevard, to all through traffic. Local access shall be maintained during the roadway closure. Through traffic shall only be allowed after the final surface course (i.e., ACFC) has been installed and accepted by the Owner.

701-3.08 Changeable Message Board: the first sentence of the first paragraph is revised to read:

The Contractor shall furnish two message boards to be placed in a location(s) as designated by the Owner prior to construction and relocated during construction as required by the Owner.

708 PAINTED PAVEMENT MARKINGS

Painted Pavement Markings shall be in accordance with Section 708 of the ADOT Standard Specifications unless modified herein.

760 COATING CORRUGATED METAL PIPE AND ARCHES

Coating Corrugated Metal Pipe and Arches shall be in accordance with Section 760 of the MAG Standard Specifications unless modified herein.

760-1 General: the last sentence is revised to read:

The size and type of the pipe to be furnished shall be as specified on the project plans. The thickness of all pipe, unless otherwise states within the project plans, shall be 0.064 inches.

810 EROSION CONTROL AND POLLUTION PREVENTION (SWPPP)

An Erosion Control and Pollution Prevention Plan shall be required for this project as the estimated disturbed area is equal to or greater than 43,560 square feet.

Erosion Control shall be in accordance with Section 810, Erosion Control and Pollution Prevention, of the ADOT Standard Specifications, unless modified herein and shall be known as SWPPP herein.

810-1 Description: is revised to read:

The Contractor is required to prepare and submit a Storm Water Pollution Prevention Plan (SWPPP) and an Arizona Pollutant Discharge Elimination System (AzPDES) permit to the Arizona Department of Environmental Quality and provide the Owner with a copy of all correspondence demonstrating that all requirements and approval to begin the work has been met.

All work specified in this subsection will be temporary for use during construction, unless designated otherwise.

The Contractor shall be responsible for maintaining all erosion and pollution control devices in proper functioning condition at all times during Construction. After completion and final approval of construction activities the Owner shall be responsible for maintaining all erosion and pollution control devices.

When deficiencies in the erosion control devices or other elements of work listed herein are noted by inspection or other observation, specified corrections shall be made by the contractor by the end of the day or work shift, or as directed by the Engineer.

Work specified herein which is lost, destroyed, or deemed unacceptable by the Engineer as a result of the Contractor's operations shall be replaced. Work specified herein which is lost or destroyed, as a result of natural events, such as excessive rainfall, shall be replaced by the Contractor.

In cases of serious or willful disregard for the protection of the waters of the U.S. and/or natural surroundings by the contractor, the Engineer will immediately notify the Contractor of such non-compliance.

810-2.03 Riprap and Rock Mulch: is revised to read:

Rock check dams or similar methods using rock rip rap or rock mulch shall not be used for erosion control methods on this project. The Contractor shall employ the methods as described within Section 810-2.02 of the ADOT Standard Specifications.

810-4 Method of Measurement: is revised to read:

No measurement shall be made for Erosion Control and Pollution Prevention (SWPPP). The contract unit of measurement shall be lump sum.

810-5 Basis of Payment: is revised to read:

Payment for Erosion Control and Pollution Prevention (SWPPP) shall be lump sum and shall be full compensation for work necessary to complete said Erosion Control and Pollution Prevention (SWPPP) including all necessary permits, plans, and documentation.

901 MOBILIZATION

~~Mobilization shall be in accordance with Section 901 of the ADOT Standard Specifications.~~

902 CHAIN LINK FENCE

Chain Link Fence and Gates shall be in accordance with Section 420 of the MAG Standard Specifications.

909 SURVEY MARKER

Survey Markers shall not be required to be installed for this project unless otherwise noted within the plans.

913 BANK PROTECTION

Bank Protection shall be in accordance with Section 913 of the ADOT Standard Specifications unless modified herein.

913-2.02 (A) Wire Fabric: the first sentence of the third paragraph is revised read:

Woven wire fabric for use in gabion baskets and mattresses shall be in accordance with ASTM A975; double-twisted hexagonal mesh pattern, all wire including lacing wire shall have a tensile strength of no more than 75,000 psi in accordance with ASTM A 641, wire diameter shall be 0.120 in., mesh opening 3-¼".

914 WALLS AND MISCELLANEOUS STRUCTURES

Walls shall be in accordance with Section 914 of the ADOT Standard Specifications.

924 CONTRACTOR QUALITY CONTROL:

924-1 Description:

The work under this section shall consist of furnishing all personnel, materials, supplies, facilities and equipment necessary to perform all certification of test equipment, sampling, testing, and other control actions. The work shall also include the preparation of linear control charts, Weekly Quality Control Reports, and other reports and records as described in Subsection 106.04(C) of the ADOT Specifications.

924-2 Method of Measurement:

Contractor quality control will be measured for payment on a lump sum basis as a single unit of work.

924-3 Basis of Payment:

Contractor quality control will be measured for payment on a lump sum basis as a single unit of work.

924-3.1 General:

The accepted quantities of contractor quality control, measured as provided above, will be paid at the contract lump sum price, which price shall be full compensation for the work, complete, as described and specified herein.

Partial payments under this item will be made in accordance with the following provisions:

(a) The first partial payment price will not exceed of twenty five percent of the contract lump sum price for contractor quality control.

(b) The remaining portion of the lump sum price will be prorated over the duration of the original contract on a monthly basis, and monthly progress payments will be made.

925 CONSTRUCTION SURVEYING AND LAYOUT AND AS-BUILT DRAWINGS:

Construction Surveying and Layout shall be in accordance with Section 925 of the ADOT Standard Specifications, except as modified herein.

925-1.01 As-Builts: add the following section:

Upon completion of the work, the Contractor shall perform an as-built survey of all portions of the work including but not limited to; pavements: centerline and edges where superelevation occurs; masonry walls: the alignment and elevation of all concrete footings for wall(s); beginning of top of wall, all changes in the footer and/or top of wall elevation change, changes in horizontal direction of the wall (i.e., angle points) and all points necessary to locate all concrete and other related work as shown within the plans (e.g., headwalls, sidewalk, ramps including but not limited to changes in elevation, curbing, gutter flowline, concrete stairs, pavement, handrails...etc.), guardrail, pavement along all mainline roadways (i.e., not including driveway features), all culvert pipe including at driveways, storm drain systems,....etc. The survey work shall be performed and certified by an Arizona registered Professional Land Surveyor. Datum of the survey shall be based on the benchmark information as shown on the Project Plans. Three (3) sets of the signed and sealed survey document shall be submitted to the Engineer for review and approval. As-built drawings shall also contain the following.

A. The as-built drawings shall indicate in a neat and accurate manner all changes and revisions in the original design which affect the permanent structures and which exist in the completed work. All underground utilities relocated under this contract shall be referenced to semi-permanent or permanent physical objects.

B. The alterations and references shall be made with colored ink and shall be sufficiently clear and complete to enable reproducing these changes on the original tracings. The Engineer will document these changes on the original tracings and forward the tracings to the Contractor for review and signature. The registered Professional Land Surveyor who performed the Final Survey shall certify the As-Built information by signing and sealing the tracings for the Contractor.

Final payment of this contract will not be made to the Contractor until the As-Built drawings are satisfactorily produced and certified.

C. As-Built conditions shall be kept current. They shall be inspected for accuracy and completeness monthly. The Contractor shall certify on his monthly payment requisition that the drawings are accurate and complete before the monthly payment estimate will be prepared and approved.

925-4 Method of Measurement: is revised to read:

No measurement shall be made for Construction Survey and Layout and As-Builts. The contract unit of measurement shall be lump sum.

925-5 Basis of Payment: is revised to read:

Payment for Construction Survey and Layout and As-Builts shall be lump sum and shall be full compensation for all work necessary to complete said Construction Survey and Layout and As-builts.

Contract Forms are a binding part of Informal Bid Documents and Awarded Contract.

CONTRACT FORMS

Proposal	P-1 to P-3
Bidding Schedule	BS-1 to BS-6
Bid Bond	BB-1
Qualification & Certification	QC-1 to QC-2
Reference List	RL-1
Affidavit of Non-Collusion	ANC-1
Subcontractor Certification	SC-1
Checklist & Addenda Acknowledgment	CK-1
Contract	C-1 to C-7
Contract Performance Bond	CPB-1
Labor and Materials Bond	LMB-1
Contract Performance Warranty	CPW-1
IRS W-9 Form	W-9

ORIGINAL

PROPOSAL

TO THE GILA COUNTY PUBLIC WORKS DIVISION:

Gentlemen:

The following Proposal is made for **BID NO. 032712-1, RUSSELL ROAD RECONSTRUCTION PROJECT, GLOBE, ARIZONA**, in the County of Gila in the State of Arizona.

The following Proposal is made on behalf of

Visus Engineering Construction, Inc

and no others. The Proposal is in all respects fair and is made without collusion on the part of any person, firm or corporation mentioned above, and no member or employee of Gila County is personally or financially interested, directly or indirectly, in the Proposal, or in any purchase or sale of any materials or supplies for the work to which it relates, or in any portion of the profits thereof.

The undersigned certifies that the approved Plans, Technical Specifications, General and Special Provisions and forms of Contract and Bond authorized by Gila County and constituting essential parts of this Proposal, have been carefully examined, and also that the site of the work has been personally inspected. The undersigned declares that the amount and nature of the work to be done is understood and that at no time will misunderstanding of the Plans, Technical Specifications, General Provisions, Special Provisions, or conditions to be overcome, be plead. On the basis of Plans, Technical Specifications, General and Special Provisions, each Addendum (if any) and the forms of Contract and Bond proposed for use, the undersigned proposes to furnish all the necessary equipment, materials, machinery, tools, apparatus, and other means of construction, and labor, to do all the work in the manner specified and to finish the entire project within the time hereinafter proposed, and to accept, as full compensation therefore, the sum of the various products obtained by multiplying each unit price, herein bid for the work or materials on the attached Bidding Schedule, by the quantity thereof actually incorporated in the complete project, as determined by the Public Works Director. The undersigned understands that the quantities mentioned herein are approximate only and are subject to increase or decrease and hereby proposes to perform all quantities of work as either increased or decreased, in accordance with the provisions of the Specifications, at the unit price bid in the attached Bidding Schedule.

The undersigned further proposes to perform all extra work that may be required on the basis provided in the Specifications and to give such work personal attention and to secure economical performance.

Proposal continued...

The undersigned further proposes to execute the Contract Agreement and furnish satisfactory Bonds within ten (10) calendar days from the date of Notice of Award, time being of the essence. The undersigned further proposes to begin work as specified in the contract attached hereto, and to complete the work Within One Hundred and Twenty (120) Calendar Days of the Notice to Proceed, and maintain at all times a Payment Bond and Performance, Labor and Material Bonds, approved by the Public Works Director, in an amount equal to one hundred (100%) percent of the total bid. These bonds shall serve not only to guarantee the completion of the work on the part of the undersigned, but also to guarantee the excellence of both workmanship and material and the payment of all obligations incurred, until the work is finally accepted and the provisions of the Plans, Standard Specifications and Special Provisions fulfilled.

A Proposal Guaranty in the amount and character named in the Call for Bids is enclosed amounting to not less than ten (10%) percent of the total bid, which Proposal Guaranty is submitted as a guaranty of the good faith of the bidder and that the bidder will enter into written contract, as provided, to do the work, if successful in securing the award thereof, and it is hereby agreed that if at any time other than as provided in the Proposal requirements and conditions the undersigned should withdraw this Proposal, or if the Proposal is accepted and there should be failure on the part of the undersigned to execute the Contract and furnish satisfactory Bond as herein provided, Gila County, in either of such events, shall be entitled and is hereby given the right to retain the said Proposal Guaranty as liquidated damages.

If by a Corporation:

(SEAL)

Corporate Name: Visus Engineering Construction, Inc.

Corporate Address: 1831 N. Rochester Mesa, Az 85205

Incorporated under the laws of the State of: Arizona

By (Signature): _____ **Date:** 8-27-12

President: Barry Hunnel

Secretary: Robert Smith

Treasurer: Robert Smith

If by a Firm or Partnership:

Firm or Partnership Name: _____

Proposal continued...

Firm or Partnership Address:_____

By (Signature):_____ **Date:**_____

Name and Address of Each Member:_____

_____

_____

_____

_____

If by an Individual:

Signature:_____ **Date:**_____

BIDDING SCHEDULE

RUSSELL ROAD RECONSTRUCTION PROJECT
GILA COUNTY, ARIZONA

We agree to provide all work and material necessary to complete the project as shown on the plans and specifications for the following Contract Price:

Firm Name: Visus Engineering Construction, Inc.

TOTAL CONTRACT PRICE, for the sum of $ 70,000 –

WRITTEN TOTAL CONTRACT PRICE

Seventy thousand and zero **Dollars**

and 0 **Cents.**

This Contract Price is based upon the Bidder's quantities and unit prices tabulated on Pages BS-2 through BS-4 of the Proposal. The Bidder agrees that the Contract Price will be payment in full for all work shown on the plans and described in the Contract Documents.

Any authorized increases or decreases to the work shall be authorized by Change Order. The Contract Price shall be increased or decreased by the amount of work or material increased or decreased at the following Bid Unit Prices.

BIDDING SCHEDULE

Firm Name: Visus Engineering Construction, Inc.

COST SUMMARY BREAK DOWN ROADWAY ITEMS

ITEM	DESCRIPTION	UNIT	ESTIMATED QUANTITIES	UNIT PRICE	EXTENDED AMOUNT
109	Force Account Work	L.S.	1	$75,000	$75,000
202	Removal of Structures and Obstructions	L.S.	1	25,000-	25,000-
203	Earthwork	C.Y.	2,740	8-	21,920-
211	Fill Construction	C.Y.	1,370	10-	13,700-
301	Subgrade Preparation	S.Y.	11,864	2-	23,728-
310	Aggregate Base Course - (ADOT Class II)	C.Y.	2,310	45-	103 950. [illegible]
321	Asphaltic Concrete - MAG (3/4") Mix	Ton	1,343	82-	11,0126.-
340.1	Concrete Parking Block	EA.	30	40-	1200-
340.2	Concrete Sidewalk	S.F.	893	3-	2679-
340.3	Concrete Headwall, ADOT B-11.11, for (4) 42" CMPA	L.S.	1	10,000-	10,000-
411	Asphaltic Concrete Friction Course	Ton	147	105-	15,435-
520	Pedestrian Handrail	L.F.	88	50-	4400-
525	Shotcrete (MAG 525)(4" thick, 6x6x10 WWF)(colored)	S.F.	5,810	5-	29,050-
621	Pipe, Corrugated Metal, 42"	LF	312	90-	28,080-
607.2	New Sign Panel, STOP, R1-1, 30"x30"	EA.	2	300-	600-
607.6	New Sign Panel, SPEED LIMIT 35, R2-1, 24"x30"	EA.	4	250-	1000-
701	Maintenance and Protection of Traffic	L.S.	1	23581-	23581-

COST SUMMARY BREAK DOWN ROADWAY ITEMS *continued*

Firm Name:

ITEM	DESCRIPTION	UNIT	ESTIMATED QUANTITIES	UNIT PRICE	EXTENDED AMOUNT
708.1	Permanent Pavement Marking (Painted)(White)(4" Equiv)	L.F.	3,918	1-	3918-
708.2	Permanent Pavement Marking (Painted)(Yellow)(4" Equiv)	L.F.	4,899	1-	4899-
708.3	Permanent Pavement Marking (Thremoplastic)(ARROW)	L.F.	2	150-	300-
708.4	Permanent Pavement Marking (Thremoplastic)(ONLY)	L.F.	2	150-	300-
808.1	Pipe, Ductile Iron (6"Class 350)	L.F.	50	50-	2500-
808.2	Waterline Encasement, 16" Casing Pipe (AWC E-9-24-1)	L.F.	24	90-	2160-
808.3	45° Bend, Ductile Iron & Joint Restraint, 6"	EA.	4	500-	2000-
810	Erosion Control and Pollution Prevention Plan (SWPPP)	L.S.	1	6000-	6000-
900	Mailbox Support System	L.S.	1	1000-	1000-
901	Mobilization	L.S.	1	25,000-	25,000-
902.2	Chain Link Fence, H=6', Security Type	L.F.	329	23-	7567-
902.3	Chain Link Fence, H=6', Non-security	L.F.	74	35-	2590-
902.4	Chain Link Fence, Gate, Double Swing, W=28', Security Type	EA.	1.5	3000-	4500-
902.5	Chain Link Fence, Roll Gate, Single, W=14'	EA.	1	1200-	1200-
913	Dumped RipRap, D_{50}=6"	C.Y.	88	69-	6072-

COST SUMMARY BREAK DOWN ROADWAY ITEMS *continued*

Firm Name:

ITEM	DESCRIPTION	UNIT	ESTIMATED QUANTITIES	UNIT PRICE	EXTENDED AMOUNT
913	Dumped RipRap, D_{50}=12"	C.Y.	326	75- /c	24,450-
913	Gabion Baskets	C.Y.	48	175- /c	8400-
913.1	Gabion Mattress (12" deep)	C.Y.	24	170- /c	4080-
914*	Masonry Wall, ADOT Std.	S.F.	6,241	15-	93615-
924	Contractor Quality Control	L.S.	1	15,000-	15,000-
925	Construction Survey and Layout and As-builts	L.S.	1	15,000-	15,000-
				Total Base Bid	720,060-

*wall items are measured in square foot of the face of wall

GILA COUNTY

QUALIFICATION AND CERTIFICATION FORMS

Purpose

This exhibit shall serve as a requirement to enable the evaluation team to assess the qualifications of Contractors under consideration for final award.

The information may or may not be a determining factor in award.

Contract Number 032712-1 RUSSELL ROAD RECONSTRUCTION PROJECT

The applicant submitting this Bid warrants the following:

1. Name, Address, Email Address and Telephone Number of Principal Contractor:
   Visus Engineering Construction Inc
   1831 N. Rochester Mesa, Az 85205 480.833.8266
   jKerr@visusinc.com

2. Had Contractor (under its present or any previous name) ever failed to complete a contract?
   _____Yes __X__No. If "Yes, give details, including the date, the contracting agency, and the reasons Contractor failed to perform in the narrative part of this Contract.

3. Has Contractor (under its present or any previous name) ever been disbarred or prohibited from competing for a contract? _____Yes __X__No. If "Yes", give details, including the date, the contracting agency, the reasons for the Contractors disqualification, and whether this disqualification remains in effect in the narrative part of this Contract.

4. Has a contracting agency ever terminated a contract with Contractor prior to contract expiration date (under your firm's present or any previous name)? _____Yes __X__No. If "Yes", give details including the date, the contracting agency, and the reasons Contractor was terminated in the narrative part of this Contract.

5. Contractor must also provide at least the following information:
   a. A brief history of the Contractors Firm.
   b. A Cost Proposal shall be submitted on the Price Sheet, attached hereon and made a full part of this contract by this reference.
   c. A list of previous and current customers, which are considered identical or similar to the Scope of Work described herein; shall be submitted on the Reference List, attached hereon and made a full part of this contract by this reference.

d. List of any subcontractors (if applicable) to be used in performing the service must accompany the Proposal. The subcontractors Arizona ROC, contact name and phone # must be included.

e. List the specific qualifications the Contractor has in supplying the specified services.

f. Gila County reserves the right to request additional information.

6. **Contractor Experience Modifier (e-mod) Rating in Arizona:** 1.06
A method the National Council on Compensation Insurance (NCCI) uses to measure a business' computed loss ratio and determine a factor, which when multiplied by premium, can reward policyholders with lower losses. E-mod rate may be a determining factor in bid award.

7. **Current Arizona Contractor License Number:** 250596 & 191221

Signature of Authorized Representative

Jeffrey A. Kirr

Printed Name

CEO

Title

Gila County – Russell Rd Reconstruction
Bid Call # 032712-1

Item # 5A- Brief History of Contractor
and
Item # 5E – List of specific qualifications the Contractor has in supplying the specified services

You will find this letter contains the history of Visus, Inc.

Visus, Inc. was established in December 2003. The Principals of Visus, Inc. consist of Jeffrey A. Kerr, P.E., Barry J. Hunnel, Robert B. Smith. Jeff and Barry were Principals with Archon for 11 years and were responsible for the growth of the company from 3 employees to 150 employees with annual revenue in excess of $30 million per year.

Jeffrey A. Kerr, P.E. is the C.E.O, Project Manager and Estimator for Visus. Jeff while employed at Archon, Inc. was Secretary/Treasurer, Project Manager and Estimator. Jeff is an Arizona State University graduate with a bachelor's degree in Civil Engineering and currently holds a Professional Engineering License in the State of Arizona. Jeff has managed and constructed projects in the range of $200,000 to $10,000,000 for the last 20 year's.

Barry J. Hunnel is the President of Visus, Inc. Barry was the Vice-President and Director of Field Operations for Archon, Inc. Barry was responsible for managing equipment and personnel throughout his 11 years with Archon. During the latter years, Barry also managed several projects a year ranging in value from $500,000 to $5,000,000. Barry has been in the construction industry for over 20 years.

Robert B. Smith is the Secretary for Visus, Inc. Robert worked at Archon for six years as their General Superintendent/Superintendent. At Archon, Robert was responsible for numerous projects and on several occasions was the Superintendent on the larger, more complex projects. Robert has over 20 years of construction experience.

Year Finished	Type of Work	Owner Name	Contract Amount	Percent Completion
2012	Cloister Pavement Rehabiliation	Cloisters Assocaitions	$ 408,000.00	100%
2011	ACS Marquee Sign	City of Avondale	$ 23,380.00	100%
2011	Riley Dr. Improvments	City of Avondale	$ 347,829.00	100%
2011	Site Grading	Town of Florence	$ 98,996.00	100%
2011	Falcon Field Airport Taxiway B	City of Mesa	$ 1,492,000.00	100%
2011	83rd ave & Missouri	City of Glendale	$ 39,000.00	100%
2011	Parking Lot Imrprovement @ Mountainside Middle School	Scottsdale Unified School District	$ 238,095.00	100%
2011	Gilbert Rd: Low Flow Crossing	MCDOT	$ 480,000.00	100%
2011	Avondale & McDowell Rd Intersection Imrpovements	City of Avondale	$ 561,236.00	100%
2011	Plaza Drive Imrpovements	City of Apache Junction	$ 458,400.00	100%
2011	El Mirage & Santa Fe Lane	City of El Mirage	$ 105,201.00	100%
2011	Fountain Hills Sidewalk	ADOT	$ 190,000.00	100%
2010	Ironwood Dr. Lost Dutchman to Tepee	City of Apache Junction	$ 640,400.00	100%
2010	Guadalupe and Dobson Roads Intersection Improvements	City of Mesa	$ 1,696,929.00	100%
2010	Avondale and Encanto Blvd Improvements	City of Avondale	$ 480,285.96	100%
2010	Del Cambre Avenue Street & Sidewalk Improvements	Town of Fountain Hills	$ 207,348.40	100%
2010	Truck Access Repairs @ Scottsdale Community College	MCCCD	$ 55,000.00	100%
2010	O'Neil Park Flood Irrigation Improvements	City of Glendale	$ 38,100.00	100%
2010	Senior Center Parking Lot	Town of Guadalupe	$ 39,225.00	100%
2010	Union Hills Widening	City of Surprise	$ 318,000.00	100%
2009	Houston Elementary School Parking Lot	Gilbert Public Schools	$ 22,100.00	100%
2009	Calle Cerritos Full Section Street Improvements	Town of Guadalupe	$ 221,841.93	100%
2009	Scottsdale Airport Pavement	City of Scottsdale	$ 173,000.00	100%
2009	Paradise Valley Community College Decomposed Granite Parking Lot	MCCCD	$ 49,500.00	100%
2009	Glendale Elementary School No. 18	Glendale Elementary School District # 40	$ 478,000.00	100%
2009	Mahoney Neighborhood Sidewalk and Street Improvements	City of Mesa	$ 380,000.00	100%
2009	Drew Street Improvements	City of Mesa	$ 599,008.25	100%
2009	Septic System Conversion & Parking Lot Additions at Higley Elementary & Middle School	Higley Unified School District	$ 332,000.00	100%
2009	Bus Lane Installatins @ Aztec Elementary School	City of Scottsdale	$ 185,000.00	100%
2009	Falcon Field Airport - 4R Engine Run-up	City of Mesa	$ 654,470.00	100%
2009	Arianna Court 8-Inch Water Main	Town of Gilbert	$ 102,000.00	100%
2009	Street Capacity Improvements	City of Chandler	$ 270,000.00	100%
2009	Linda Lane Sewer Tap Replacement	Town of Gilbert	$ 119,000.00	100%
2009	Coronado Elementary School Parking Lot Addition	Higley Unified School District	$ 100,348.00	100%
2009	Greasewood Drainage Improvements	City of Surprise	$ 179,500.00	100%
2009	56th St and Chandler Blvd Right Turn Lanes	City of Chandler	$ 422,000.00	100%

GILA COUNTY

REFERENCE LIST

These references are required to enable the evaluation team to assess the qualifications of the Contractor under consideration for final award. The information may be a determining factor in award.

References

Please list a minimum of four (4) references for projects of similar size and scope as this Invitation for Bids during the past twelve (12) months, in or as close to Gila County as possible.

1. **Company:** City of Surprise
   Contact: Samuel Gary
   Phone: 623-222-6130
   Address: 16000 N. Civic Center Plaza Surprise AZ 85374

2. **Company:** City of Avondale
   Contact: Charles Andrews
   Phone: 623-333-4216
   Address: 11465 W. Civic Center Dr. Avondale AZ 85323

3. **Company:** City of Mesa
   Contact: Dennis White
   Phone: 480-644-4224
   Address: PO Box 1466 Mesa AZ 85211

4. **Company:** City of Apache Junction
   Contact: Emile Schmid
   Phone: 575 E Baseline Ave Apache Junction AZ 85119
   Address: 480-474-8515

Visus Engineering Construction, Inc.
Name of Business

Signature of Authorized Representative

CEO
Title

AFFIDAVIT BY CONTRACTOR
CERTIFYING THAT THERE WAS NO COLLUSION
IN BIDDING FOR CONTRACT

STATE OF ARIZONA)
)ss
COUNTY OF:)

Jeffrey A. Kerr
(Name of Individual)
being first duly sworn, deposes and says:

That he is CEO
(Title)
of Vibus Engineering Construction, Inc. and
(Name of Business)

That he is properly prequalified by Gila County for bidding on **BID NO. 032712-1 RUSSELL ROAD RECONSTRUCTION PROJECT, GLOBE, ARIZONA** and,

That pursuant to Section 112 (C) of Title 23 USC, he certifies as follows:

That neither he nor anyone associated with the said Vibus Engineering Construction, Inc
(Name of Business)

has, directly or indirectly entered into any agreement, participated in any collusion or otherwise taken any action in restraint of free competitive bidding in connection with the above mentioned project.

Vibus Engineering Construction Inc.
Name of Business

By

CEO
Title

Subscribed and sworn to before me this 27 day of August, 2012.

Notary Public

My Commission expires: 3/26/2015

OFFICIAL SEAL
SONYA L. DUNGY
NOTARY PUBLIC - State of Arizona
PINAL COUNTY
My Comm. Expires March 26, 2015

GILA COUNTY
CERTIFICATION: INTENTIONS CONCERNING SUBCONTRACTING

At the time of the submission of bids for **BID NO. 032712-1 RUSSELL ROAD RECONSTRUCTION PROJECT, GLOBE, ARIZONA**, my intention concerning subcontracting a portion of the work is as indicated below.

In indicating that it is my intention to subcontract a portion of the work, this will acknowledge that such subcontractors will be identified and approved by the Engineer prior to award of the contract; and that documentation, such as copies of letters, requests for quotations, quotations, etc., substantiating the actions taken and the responses to such actions is on file and available for review.

A list of any subcontractors (if applicable) to be used in performing the service must accompany the Bid. The list must include the subcontractors name, address, and phone number.

Any subcontractor not listed with the bid must be approved by the County prior to providing any work pursuant to this contract. Further, contractor warrants that all subcontractors will comply with all terms and conditions of this contract. The County reserves the right to terminate the contract if the contractor fails to comply with the provisions of this certification.

Yes ☒ it is my intention to subcontract a portion of the work.

No ☐ it is not my intention to subcontract a portion of the work.

Visus Engineering Construction Inc
Name of Business

Signature of Authorized Representative

CEO
Title

BIDDERS CHECKLIST

NOTICE IS HEREBY GIVEN that all Bid Documents shall be completed and/or executed and submitted with this bid. If bidder fails to complete and/or execute any portion of the Bid Documents, this bid will be determined to be "non-responsive" and rejected.

CHECKLIST:

REQUIRED DOCUMENT	COMPLETED/EXECUTED
Proposal	✓
Bidding Schedule	✓
Surety (Bid) Bond	✓
Qualification & Certification Form	✓
Reference List	✓
Affidavit of Non-Collusion	✓
Subcontractor Certification	✓
Contract	✓
Bidders Checklist & Addenda Acknowledgment	✓

ACKNOWLEDGMENT OF RECEIPT OF ADDENDA:

	#1	#2	#3	#4	#5
Initials/ Date	8/21/12				

Signed and dated this 27 day of August, 2012.

Visus Engineering Construction, Inc
CONTRACTOR

BY: Jeffrey A. Kerr - CEO

Each proposal shall be sealed in an envelope addressed to Gila County Purchasing Department and bearing the following statement on the outside of the envelope: **Proposal to Construct: RUSSELL ROAD RECONSTRUCTION PROJECT, Gila County Arizona, Bid No. 032712-1.** All proposals shall be filed at **Gila County Procurement, 1400 E. Ash St., Globe, AZ 85501**, on or before **Tuesday, August 28th, 2012, 11:00 a.m.**

GILA COUNTY
CONTRACT NO. 032712-1

THIS AGREEMENT, made and entered into this 18th day of September, **2012**, by and between Gila County, a political subdivision of the State of Arizona, party of the first part, hereinafter designated the **OWNER**, and Visus Engineering Construction of the City of Mesa, County of Maricopa, State of Arizona, party of the second part, hereinafter designated the **CONTRACTOR**.

WITNESSETH: That the said **Contractor**, for and in consideration of the sum to be paid him by the said **Owner**, in the manner and at the time hereinafter provided, and of the other covenants and agreements herein contained, and under the penalties expressed in the bond hereto attached, hereby agrees, for himself, his heirs, administrators, successors, and assigns as follows:

ARTICLE I - SCOPE OF WORK: The **Contractor** shall furnish any and all plant materials, labor, construction equipment, and services, required for performing all work for construction for **Bid No. 032712-1 RUSSELL ROAD RECONSTRUCTION PROJECT, GLOBE, ARIZONA** in accordance with the plans and these specifications, and to completely and totally construct the same and install the material herein for the **Owner**, in a good and workmanlike and substantial manner and to the satisfaction of the **Owner** through its Engineers and under the direction and supervision of the Engineer, or his properly authorized agents and strictly pursuant to and in conformity with the Specifications prepared by the Engineers for the **Owner**, and with such modifications of the same and other documents that may be made by the **Owner** through the Engineer, or his properly authorized agents, as provided herein. Once the Bid has been awarded the bid number 032204-1 will become the Contract Number.

ARTICLE II - CONTRACT DOCUMENTS: The attached "Call for Bids", "Technical Specifications", "General Provisions", "Special Provisions", "Proposal", "Bidding Schedule", "Bid Bond", "Qualification & Certification Forms", "Reference List", "Affidavit of Non-Collusion", "Subcontractor Certification", "Employment Laws Acknowledgment", "Checklist & Addenda Acknowledgment", "Performance Bond", "Labor and Materials Bond", "Contract Performance Bond", and Plans thereto, if any, are by this reference made a part of this Contract to the same extent as if set forth herein in full. In the event of any conflict or any inconsistency in the documents, controlling weight shall be assigned in the following order: the Contract; the Technical Specifications; the Special Provisions; the General Provisions; all other documents. Contract is considered invalid unless signed by the Gila County Board of Supervisors.

ARTICLE III – SAFETY AND LOSS CONTROL: The Gila County Safety and Loss Control booklet must be read and signed by all working at the job site.

During the pre-construction meeting a time will be set for the Gila County QA/QC Safety Compliance Officer for a safety meeting. For every safety meeting the Contractor shall invite the QA/QC Safety Compliance Officer and shall give at least a twenty-four (24) hour notice.

ARTICLE IV – INDEMNIFICATION CLAUSE: The Contractor agrees to indemnify and save harmless the County of Gila, its officers, agents and employees, and any jurisdiction or agency issuing permits for any work included in the project, their officers, agents and employees, hereinafter referred to as indemnitee, from all suits and claims, including attorney's fees and cost of litigation, actions, loss, damage, expense, cost or claims of any character or any nature arising out of the work done in fulfillment of the terms of this Contract or on account of any act, claim or amount arising or recovered under workers' compensation law or arising out of the failure of the Contractor to conform to any statutes, ordinances, regulation, law or court decree. It is agreed that the Contractor will be responsible for primary loss investigation, defense and judgment costs where this contract of indemnity applies. In consideration of the award of this contract, the Contractor agrees to waive all rights of subrogation against the County, its officers, officials, agents and employees for losses arising from the work performed by the Contractor for the County.

ARTICLE V – INSURANCE REQUIREMENTS: Contractor and subcontractors shall procure and maintain until all of their obligations have been discharged, including any warranty periods under this Contract are satisfied, insurance against claims for injury to persons or damage to property which may arise from or in connection with the performance of the work hereunder by the Contractor, his agents, representatives, employees or subcontractors.

The insurance requirements herein are minimum requirements for this Contract and in no way limit the indemnity covenants contained in this Contract.

The County in no way warrants that the minimum limits contained herein are sufficient to protect the Contractor from liabilities that might arise out of the performance of the work under this Contract by the Contractor, his agents, representatives, employees, or subcontractors. Contractor is free to purchase such additional insurance as may be determined necessary.

A. **MINIMUM SCOPE AND LIMITS OF INSURANCE** - Contractor shall provide coverage with limits of liability not less than those stated below:

1. **Commercial General Liability – Occurrence Form**
   Policy shall include bodily injury, property damage, broad form contractual liability and XCU coverage.
   - General Aggregate $2,000,000
   - Products – Completed Operations Aggregate $1,000,000
   - Personal and Advertising Injury $1,000,000
   - Each Occurrence $1,000,000

   a. The policy shall be endorsed to include the following additional insured language: **"The County of Gila shall be named as an additional insured with respect to**

liability arising out of the activities performed by, or on behalf of the Contractor".

2. **Automobile Liability**
   Bodily injury and property damage for any owned, hired, and non-owned vehicles used in the performance of this Contract.

Combined Single Limit (CSL)	$1,000,000

   a. The policy shall be endorsed to include the following additional insured language: **"The County of Gila shall be named as an additional insured with respect to liability arising out of the activities performed by, or on behalf of the Contractor, including automobiles owned, leased, hired or borrowed by the Contractor".**

3. **Worker's Compensation and Employers' Liability**

Workers' Compensation	Statutory
Employers' Liability	
~~Each Accident~~	~~$100,000~~
Disease – Each Employee	$100,000
Disease – Policy Limit	$500,000

   a. Policy shall contain a **waiver of subrogation** against the County of Gila.

B. **ADDITIONAL INSURANCE REQUIREMENTS:** The policies shall include, or be endorsed to include, the following provisions:

1. On insurance policies where the County of Gila is named as an additional insured, the County of Gila shall be an additional insured to the full limits of liability purchased by the Contractor even if those limits of liability are in excess of those required by this Contract.
2. The Contractor's insurance coverage shall be primary insurance and non-contributory with respect to all other available sources.
3. Coverage provided by the Contractor shall not be limited to the liability assumed under the indemnification provisions of this Contract.

C. **NOTICE OF CANCELLATION:** Each insurance policy required by the insurance provisions of this Contract shall provide the required coverage and shall not be suspended, voided, canceled, reduced in coverage or endorsed to lower limits except after thirty (30) days prior written notice has been given to the County. Such notice shall be sent directly to the **Gila County Purchasing Department, 1400 E. Ash St., Globe, AZ 85501** and shall be sent by certified mail, return receipt requested.

D. **ACCEPTABILITY OF INSURERS:** Insurance is to be placed with insurers duly licensed or approved unlicensed companies in the state of Arizona and with an "A.M. Best" rating of not less than B+ VI. The County in no way warrants that the above-required minimum insurer rating is sufficient to protect the Contractor from potential insurer insolvency.

E. **VERIFICATION OF COVERAGE:** Contractor shall furnish the County with certificates of insurance (ACORD form or equivalent approved by the County) as required by this Contract.

The certificates for each insurance policy are to be signed by a person authorized by that insurer to bind coverage on its behalf.

All certificates and endorsements are to be received and approved by the County before work commences. Each insurance policy required by this Contract must be in effect at or prior to commencement of work under this Contract and remain in effect for the duration of the project. Failure to maintain the insurance policies as required by this Contract or to provide evidence of renewal is a material breach of contract.

All certificates required by this Contract shall be sent directly to the **Gila County Purchasing Department, 1400 E. Ash St., Globe, AZ 85501.** The County project/contract number and project description shall be noted on the certificate of insurance. The County reserves the right to require complete, certified copies of all insurance policies required by this Contract at any time.

F. **SUBCONTRACTORS:** Contractors' certificate(s) shall include all subcontractors as additional insured's under its policies or Contractor shall furnish to the County separate certificates and endorsements for each subcontractor. All coverage's for subcontractors shall be subject to the minimum requirements identified above.

G. **APPROVAL:** Any modification or variation from the insurance requirements in this Contract shall be made by the County Attorney, whose decision shall be final. Such action will not require a formal Contract amendment, but may be made by administrative action.

ARTICLE VI - TIME OF COMPLETION: The Contractor further covenants and agrees, at his own proper cost and expense, to do all work and furnish all materials, labor, construction equipment, and services for performing all of the work for construction of said improvements and to completely construct the same and install the material therein, as called for by this agreement free and clear of all claims, liens, and charges whatsoever, in the manner and under the conditions specified within the time, or times, stated in the Proposal.

Work on this project shall start within **no later than ten (10) Days of the Notice To Proceed,** and shall be completed within the following limits:

SCHEDULE:

For construction in the contract documents, the project shall be completed within **One Hundred and Twenty (120) Days of the Notice To Proceed.**

It is expressly understood and agreed that in case of failure on the part of the Contractor, for any reason, except with the written consent of the Engineer, to complete the work to the satisfaction of the Engineer and within the aforesaid time limits, the Owner may deduct from any money due, or which may become due the Contractor, as liquidated damages, an amount as fixed by the following schedule:

WORK ITEM	DAILY CHARGE PER CALENDAR DAY
All work not complete within the above specified time after start of work.	[redacted]

If no money shall be due the Contractor, the Owner shall have a cause of action to recover against the Contractor in a court of competent jurisdiction, liquidated damages as fixed by the above schedule; said deduction to be made, or said sum to be recovered, not as a penalty, but as liquidated damages; provided, however, that upon receipt of written notice from the Contractor, of the existence of causes, as herein provided, over which said Contractor has no control and which must delay the completion of the said work or any delay occasioned by the Owner, the Engineer may extend the period hereinafter specified for the completion of said work in accordance with the specifications and in such case, the Contractor shall become liable for said liquidated damages for delays commencing from date said extension period shall expire.

ARTICLE VII - CANCELLATION: This agreement is subject to cancellation pursuant to **A.R.S. §38-511** and **GENERAL PROVISION 80-09 DEFAULT AND TERMINATION OF CONTRACT.**

ARTICLE VIII - PAYMENTS: The Contractor shall make an estimate of the work performed during the preceding month and submit the same to the Engineer for checking. On or before ***thirty (30) days*** after the certified and approved estimate of the work is received by the Owner, the Owner shall pay to the Contractor ninety percent (90%) of the value of said work in place, as approved by the Engineer. The balance of ten percent (10%) of the estimate shall be retained by the Owner until the time of final payment and acceptance of said work, as per **A.R.S. §34-221(A)(2).**

In order to receive payment the Contractor shall have a current W-9 Form on file with the County unless required by law.

All invoices submitted by the Contractor shall include at least the following but not be limited to:

- Purchase Order Number
- Contract Number
- Project Title
- Invoice Number
- Vendor Name and Address
- Description of Service

ARTICLE IX – LAWS AND ORDINANCES: This agreement shall be enforced under the laws of the State of Arizona. The Contractor shall maintain in current status all Federal, State, and Local licenses and permits required for the operation of the business conducted by the Contractor.

The **Contractor** shall comply with the applicable provisions of the Americans with Disabilities Act **(Public Law 101-336, 42 U.S.C. 12101-12213)** and applicable Federal regulations under the Act.

ARTICLE X – LEGAL ARIZONA WORKERS ACT COMPLIANCE: Contractor hereby warrants that it will at all times during the term of this Contract comply with all federal immigration laws applicable to Contractor's employment of its employees, and with the requirements of A.R.S. § 23-214 (A) (together the "State and Federal Immigration Laws"). Contractor shall further ensure that each subcontractor who performs any work for Contractor under this contract likewise complies with the State and Federal Immigration Laws.

County shall have the right at any time to inspect the books and records of Contractor and any subcontractor in order to verify such party's compliance with the State and Federal Immigration Laws.

Any breach of Contractor's or any subcontractor's warranty of compliance with the State and Federal Immigration Laws, or of any other provision of this section, shall be deemed to be a material breach of this Contract subjecting Contractor to penalties up to and including suspension or termination of this Contract. If the breach is by a subcontractor, and the subcontract is suspended or terminated as a result, Contractor shall be required to take such steps as may be necessary to either self-perform the services that would have been provided under the subcontract or retain a replacement subcontractor as soon as possible so as not to delay project completion.

Contractor shall advise each subcontractor of County's rights, and the subcontractor's obligations, under this Article by including a provision in each subcontract substantially in the following form:

"Subcontractor hereby warrants that it will at all times during the term of this contract comply with all federal immigration laws applicable to Subcontractor's employees, and with the requirements of A.R.S. §23-214 (A). Subcontractor further agrees that County may inspect the Subcontractor's books and records to insure that Subcontractor is in compliance with these requirements. Any breach of this paragraph by Subcontractor will be deemed to be a material breach of this contract subjecting Subcontractor to penalties up to and including suspension or termination of this contract."

Any additional costs attributable directly or indirectly to remedial action under this Article shall be the responsibility of Contractor. In the event that remedial action under this Article results in delay to one or more tasks on the critical path of Contractor's approved construction or critical milestones schedule, such period of delay shall be deemed excusable delay for which Contractor shall be entitled to an extension of time, but not costs.

ARTICLE XI – ANTI-TERRORISM WARRANTY: Pursuant to A.R.S. § 35-393.06(B) and 35-301.06(A) the Contractor certifies that it does not have scrutinized business operations in Iran or Sudan and that they are in compliance with the Export Administration Act and not on the Excluded Parties List.

IN WITNESS WHEREOF, two (2) identical counterparts of this contract, each of which shall for all purposes be deemed an original thereof, have been duly executed by the parties hereinabove named, on the date and year first above written.

In return for the performance of this Contract by the **Contractor**, the **Owner** agrees to pay the amount of $ 720,000 ~ **INCLUDING ALL APPLICABLE TAXES** through a payment schedule as described in the Contract documents and as may be modified and executed by change orders and by final quantities.

The **Contractor** agrees that this contract, as awarded, is for the following work, and understands that payment for the total work will be made on the basis of the indicated amount(s), as bid in the Proposal and attached Bidding Schedule for:

RUSSELL ROAD RECONSTRUCTION PROJECT
BID NO. 032712-1

OWNER:

GILA COUNTY BOARD OF SUPERVISORS

Tommie C. Martin, Chairman, Board of Supervisors

ATTEST:

Marian Sheppard, Chief Deputy Clerk of the Board

APPROVED AS TO FORM:

Bryan B. Chambers, Chief Deputy County Attorney
***for* Daisy Flores, County Attorney**

CONTRACTOR:

Contractor Signature

Jeffrey A. Kerr - CEO
Print Name

Witness (If Contractor is Individual)

GILA COUNTY
CONTRACT PERFORMANCE WARRANTY

I, Jeffrey A Kerr, representing
Vasus Engineering Const Inc (company name)

do hereby warranty the work performed for the:

RUSSELL ROAD RECONSTRUCTION PROJECT, GLOBE, ARIZONA

for a period of **two years** from completion of said work.

Said work shall be free from defects which would cause the work not to perform in it's intended manner.

(Officer, Partner, Owner) 8/28/12 Date

SECTION VI

NOTED STANDARD DETAIL DRAWINGS

NOTES

1. ALL CONCRETE SHALL BE CLASS 'C' PER SECT. 725.
2. FITTINGS NOT SPECIFICALLY DETAILED SHALL BE HEAVY DUTY DESIGN.
3. STRAIN POSTS SHALL BE SPACED AT 500' MAXIMUM SPACING.
4. BOTH CORNER AND STRAIN POSTS SHALL HAVE STRAIN PANELS.
5. ALL POSTS SHALL BE CAPPED.
6. MEMBER SIZES SHALL BE THE FOLLOWING:

MEMBER	AISC SIZE	OUTSIDE DIA.
CORNER POST	2-1/2"	2.875"
LINE POST	1-1/2"	1.900"
STRAIN POST	1-1/2"	1.900"
BRACE	1-1/4"	1.666"
STRETCH BAR	3/16"x3/4" FLAT	3/16"x3/4" FLAT
GATE POST	3-1/2"	4.000"
TOP RAIL	1-1/4"	1.666"

7. CONSTRUCTION AND MATERIALS SHALL CONFORM TO SECT. 420 AND 722, RESPECTIVELY. SEE TABLE 722 FOR WEIGHTS OF MEMBERS.

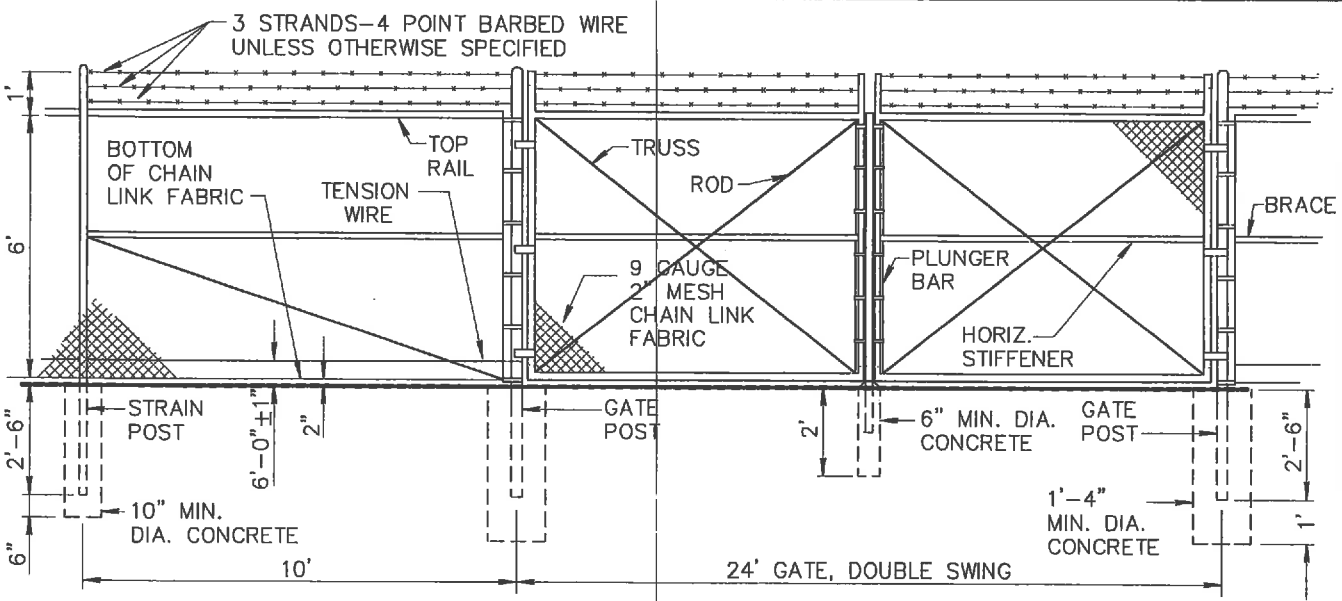

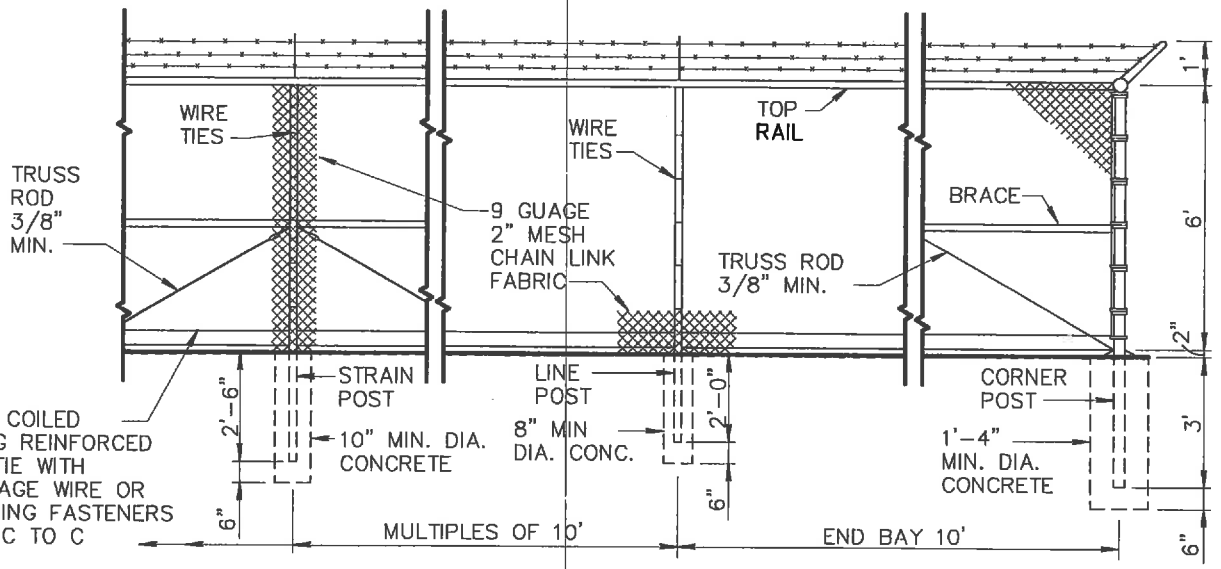

DETAIL NO.			REVISED	DETAIL NO.
160	MARICOPA ASSOCIATION of GOVERNMENTS STANDARD DETAIL ENGLISH	6' CHAIN LINK FENCE AND GATE	01-01-2003	160

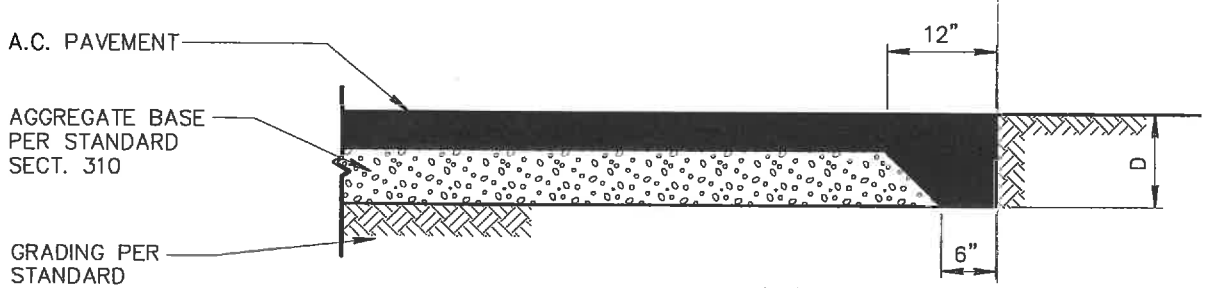

D = DESIGN THICKNESS OF A.C. PAVEMENT PLUS AGGREGATE BASE.

TYPE 'A'

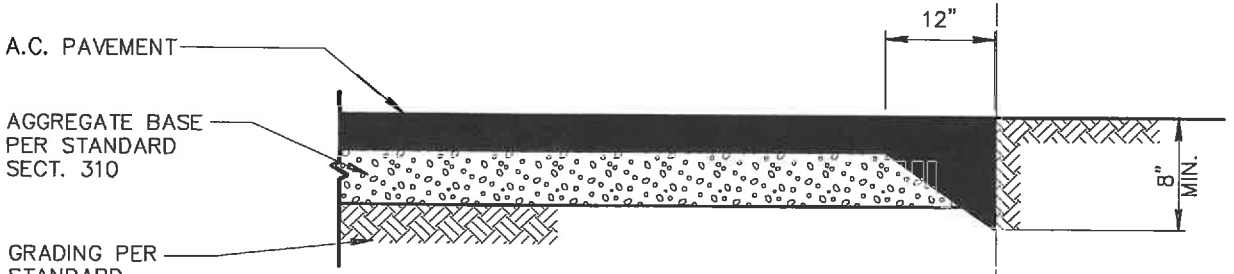

TYPE 'B'

DETAIL NO. 201	MARICOPA ASSOCIATION of GOVERNMENTS STANDARD DETAIL ENGLISH	PAVEMENT SECTION AT TERMINATION	REVISED 01-01--2008	DETAIL NO. 201

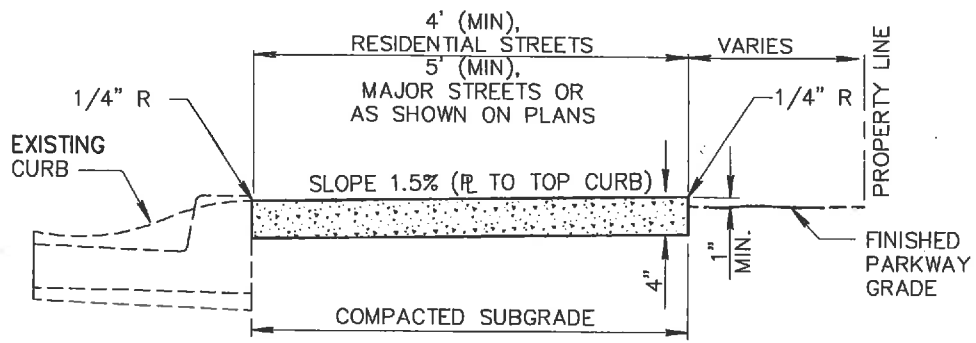

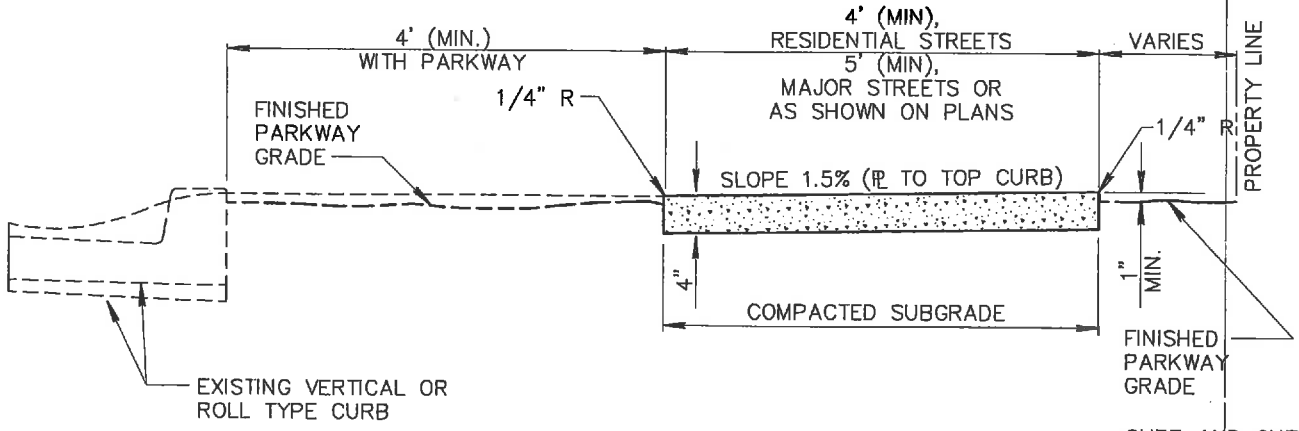

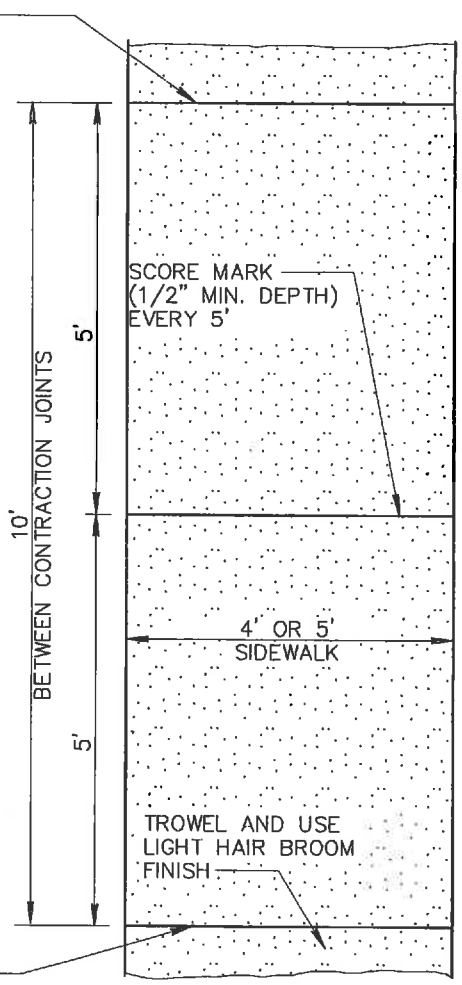

NOTES:

1. SIDEWALK CONSTRUCTION SHALL CONFORM TO SECT. 340.
2. EXPANSION JOINTS SHALL BE 1/2" BITUMINOUS TYPE PREFORMED EXPANSION JOINT FILLER, A.S.T.M. D-1751.
3. LARGE AGGREGATE, IN CONTRACTION JOINT, SHALL BE SEPARATED TO A DEPTH OF 1", FINISH DEPTH SHALL BE A MINIMUM OF 3/4".
4. EXPANSION JOINT 50' MAXIMUM SPACING PER SECT. 340.
5. CLASS 'B' CONCRETE CONSTRUCTION AS PER SECT. 725.

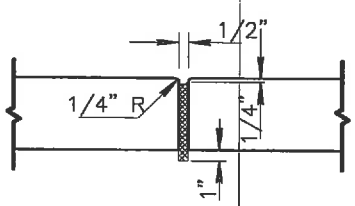

EXPANSION JOINT

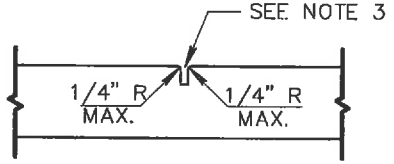

CONTRACTION JOINT

DETAIL NO. 230	MARICOPA ASSOCIATION of GOVERNMENTS STANDARD DETAIL ENGLISH	SIDEWALKS	REVISED 01-01-2003	DETAIL NO. 230

NO	DESCRIPTION OF REVISIONS	MADE BY	DATE
1	REVISED SPECIFICATIONS	RLF	9/04
2			
3			
4			

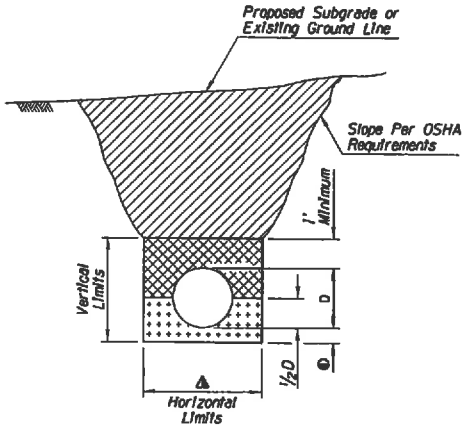

TRENCH CONDITION
IN NATURAL GROUND OR IN EMBANKMENT
WITHOUT BRACING

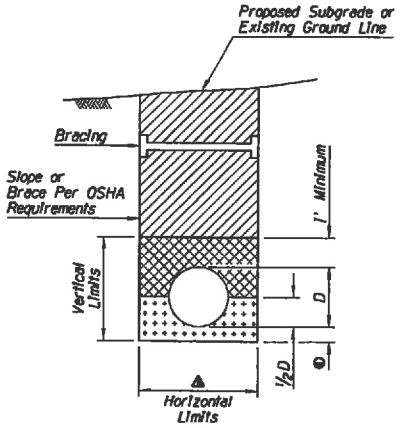

TRENCH CONDITION
IN NATURAL GROUND OR IN EMBANKMENT
WITH BRACING SHOWN

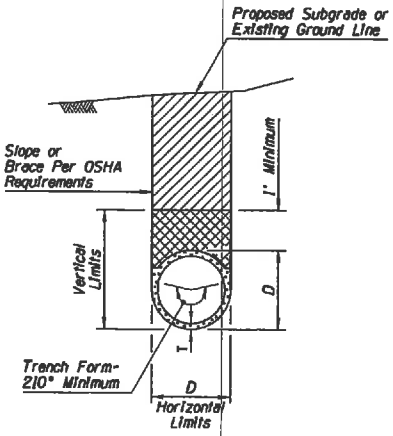

TRENCH CONDITION
NRCIPCP IN NATURAL GROUND
OR IN EMBANKMENT

GENERAL NOTES

1. Pipes shall be installed either in a trench condition or in a non-trench condition in natural ground or in embankment.
2. In a trench condition, the vertical and horizontal limits shall be maintained. If horizontal limits are exceeded or the vertical limits are not maintained, a non-trench condition exists.
3. Bracing and sloping shall conform to OSHA requirements.
4. Pipe backfill may be bedding material.
5. In a non-trench condition, the embankment for pipe stability shall be constructed in lifts to the limits shown in the detail simultaneously with the bedding material and pipe backfill. If the contractor chooses to construct it as a trench condition, the embankment shall be constructed before excavating the trench.

D - Outside diameter of full circle pipe or outside dimension (span or rise) of arch, arch pipe, elliptical pipe.

T - Minimum wall thickness for NRCIPCP: See Plans.

① ▲ For D< than 4': D + 6" each side, minimum
D + 2' each side, maximum

① For D≥ than 4': D + 1' each side, minimum
D + 3' each side, maximum

● - 6 inches except when on unyielding or unstable material. See Std Specs.

TRENCH BACKFILL

PIPE BACKFILL

BEDDING

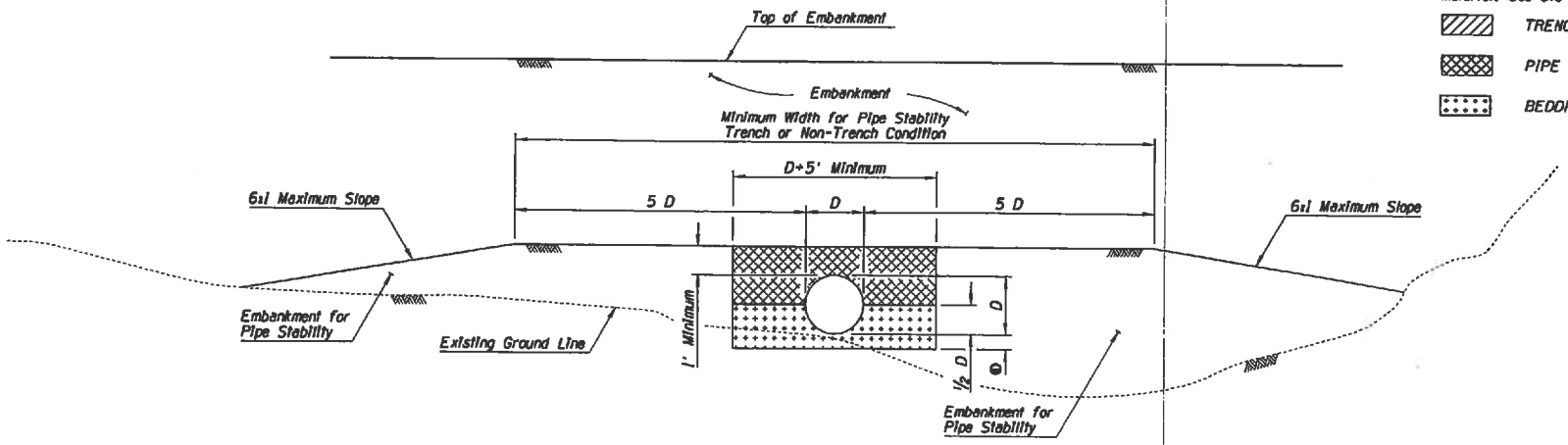

NON-TRENCH CONDITION

APPROVED FOR DESIGN: Mary Vipavica

APPROVED FOR DISTRIBUTION:

STATE OF ARIZONA
DEPARTMENT OF TRANSPORTATION
ROADWAY STANDARD DRAWINGS

REV. 5/07

TYPICAL PIPE INSTALLATION

DRAWING NO. C-13.15

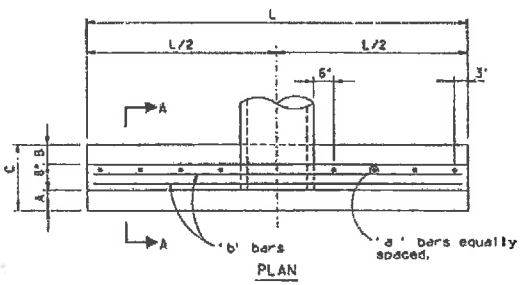

PLAN

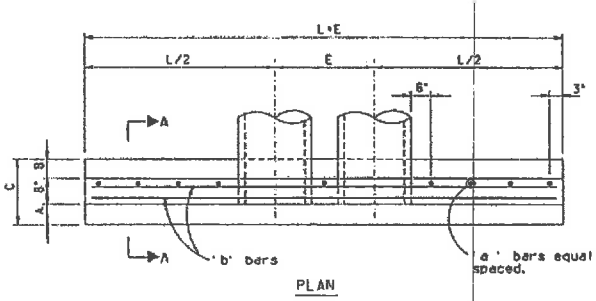

PLAN

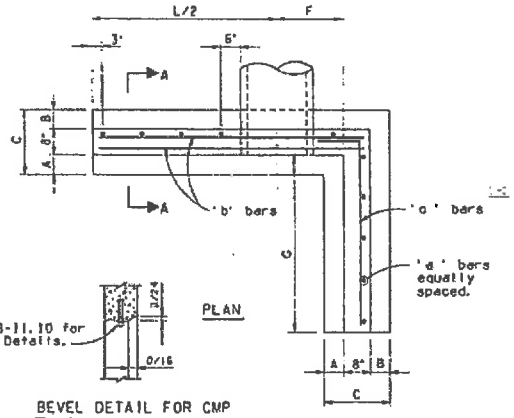

PLAN

BEVEL DETAIL FOR CMP

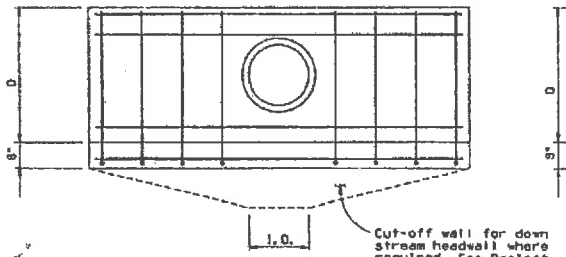

ELEVATION

SINGLE PIPE HEADWALL

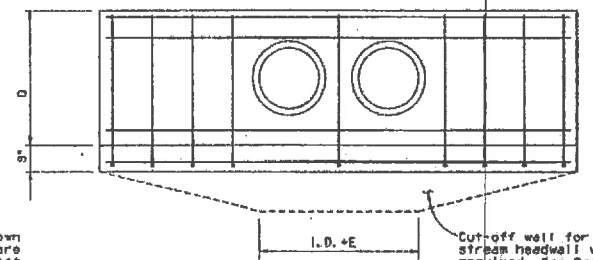

ELEVATION

DOUBLE PIPE HEADWALL

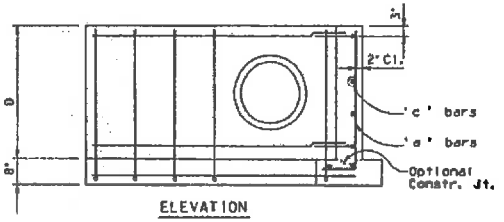

ELEVATION

'L' HEADWALL

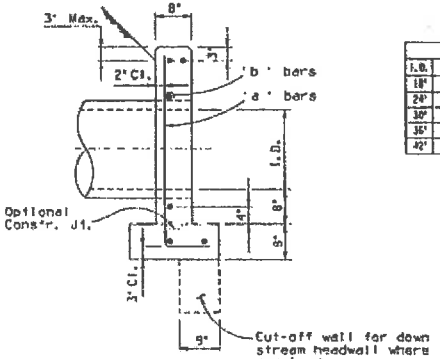

SECTION A-A

Dimensions									
I.D.	A	B	C	D	E	F	G	L	L+E
18"	6"	10"	2'-0	3'-2	2'-6	1'-7	4'-6	9'-6	12'-0
24"	8"	1'-0	2'-4	3'-8	3'-0	2'-1	5'-6	11'-6	14'-6
30"	10"	1'-2	2'-8	4'-2	3'-6	2'-7	6'-6	13'-6	17'-3
36"	1'-0	1'-4	3'-0	4'-8	4'-6	3'-1	7'-6	15'-6	20'-0
42"	1'-2	1'-6	3'-4	5'-2	5'-3	3'-7	8'-6	17'-6	22'-9

* Approximate Quantities									
I.D.	Single Pipe Hdwall.		Double Pipe Hdwall.		Add'l. Pipe Hdwall.		'L' Hdwall.		
	Conc. C.Y.	Reinf. Lbs.	Conc. C.Y.	Reinf. Lbs.	Conc. C.Y.	Reinf. Lbs.	Conc. C.Y.	Reinf. Lbs.
18"	1.2	60	1.4	73	.3	13	1.4	15
24"	1.6	78	2.0	90	.4	15	2.0	109
30"	2.1	97	2.6	116	.5	19	2.6	121
36"	2.7	111	3.4	133	.7	22	3.4	152
42"	3.4	135	3.7	160	.8	26	4.2	180

*Quantities do not include cut-off wall.

Reinforcing														
I.D.	'a' bars						'b' bars						'c' bars	
	Single Pipe Headwall		Double Pipe Headwall		'L' Headwall		Single Pipe Headwall		Double Pipe Headwall		'L' Headwall		'L' Headwall	
	No.	Lgth.	No.	Lgth.	No.	Lgth.	No.	Lgth.	No.	Lgth.	No.	Lgth.	No.	Lgth.
18"	8	6'-3	9	6'-3	10	6'-3	6	9'-0	6	11'-6	6	6'-6	5	5'-9
24"	10	5'-0	11	5'-0	12	5'-0	6	11'-0	6	14'-0	6	8'-0	6	6'-9
30"	12	5'-6	13	5'-6	14	5'-6	6	13'-0	6	16'-9	6	9'-6	6	7'-9
36"	12	6'-3	13	6'-3	15	6'-3	6	15'-0	6	19'-6	6	11'-0	7	8'-9
42"	14	7'-0	15	7'-0	18	7'-0	6	17'-0	6	22'-3	6	12'-6	7	9'-9

NOTE:

For General Notes and Chamfer Detail see Std. B-11.10.

Concrete pipe shown. Corrugated metal pipe similar.

High point of headwall shall not project more than 3" above slope.

All concrete shall be Class "B", f'c=2500 psi.

All reinforcing bars are #4.

For 3 or more pipes, add quantities shown for each additional pipe to Double Pipe Headwall quantity. Add one 'a' bar to double pipe headwall total and increase 'b' bar length by Dimension E for each additional pipe.

Dimension E equals pipe spacing.

DESIGN APPROVED

APPROVED FOR DISTRIBUTION

ARIZONA
DEPARTMENT OF TRANSPORTATION
HIGHWAYS DIVISION
STANDARD DRAWINGS

INLET and OUTLET HEADWALLS
18" to 42" PIPES

REVISION

STANDARD NO.
B-11.11

ADDENDUM #1

Gila County Bid No. 032712-1

Russell Road Reconstruction Project

The following addendums are hereby incorporated into the bid documents for the above stated project:

August 21, 2012

Questions & Answer / Corrections / Changes / Clarifications

1. Correction:
   a. The following Utility Contact Information shall replace the information shown within Sheet 2 of the Construction Improvement Plans.

Utility Name	Representative	Phone
▪ Arizona Public Service	Freddie Chism	(928)425-8034
▪ Arizona Water Company	Fred Rios	(928)473-4433
▪ CableOne	Chris Guthrey	(928)425-3816
▪ CenturyLink	Rocky Villareal	(520)426-6770
▪ El Paso Corporation	Bill Biggs	(520)663-4260
▪ Salt River Project	Elijah Lubandi	(602)236-3794
▪ Southwest Gas	James Karbo	(928)402-6313

2. Correction:
   a. Bid Document, Section 01, page GP-1, Item no.1, fourth item shall read:

      - Bid Schedule (pages BS-1 to ~~BS-6~~ *BS-4*)

3. Correction:
   a. Replace pages BS-2, BS-3 and BS-4 of the Bid Document with the enclosed revised cost summary break down items pages BS-2R, BS-3R and BS-4R, respectively.

4. Correction:
   a. Delete: Item 16, page SP-6, Special Provisions, within the Bid Document. APS has elected to relocate their powerline to the Westside of the roadway and therefore any work related to/referenced within the Document is hereby deleted.

5. Correction:
   a. The following Technical Specification has been added to the Bid Document, Page T-1.

109 FORCE ACCOUNT WORK

Force Account Work shall be in accordance with Section 109 of the ADOT Standard Specifications unless modified herein.

6. Correction:
    a. Replace Sheet 7 of 27 of the Construction Improvement Plans with the enclosed revised Sheet 7. This revision addresses the length of the parking block detail.

7. Correction:
    a. Replace Sheet 20 of 27 of the Construction Improvement Plans with the enclosed revised Sheet 20. This revision addresses the volume of excavation necessary for the paving shown on this sheet.

8. Correction:
    a. Delete: Utility Notes 2 and 3, Sheet 2 of 27 of the Construction Improvement Plans. APS has elected to relocate their powerline to the Westside of the roadway and therefore any work related to/referenced within the Plans is hereby deleted.

9. Clarification:
The completion time of the project, as stated on page P-2 of the Proposal is, **"...and to complete the work One Hundred and Twenty (120) Calendar Days of the Notice to Proceed,..."**

10. Clarification:
The Liquidated Damages Cost, as stated on page C-5 of the Contract is, **"$840.00 per Calendar Day"**

11. Clarification:
Arizona Water Company Standard Specifications [and details] are available by calling 928-473-4433.

12. Question: 1. Will there be construction water available and where?
Answer: Construction water is not available through Gila County.

13. Question: 2. Is there a designated place for excess fill?
Answer: The Contractor may dispose of earthen waste just west of the Gila County Landfill facility located along Hope Lane approximately 0.50-miles east of its intersection with Russell Road. If the Contractor elects to use this location then the Contractor shall notify the County representative no less than 48-hours prior to disposal for the approved location at this facility and after a review/approval of the waste material.

14. Question: 3. Will landfill fees be waived?
Answer: Yes, for clean earthen waste only, containing no other debris that the County representative determines as objectionable. Otherwise, for all other construction debris, landfill fees will remain in effect.

15. Question: What is the engineer's estimate?
Answer: It is the opinion of the engineer that the overall cost of construction is approximately $900,000.

16. Question: 5. Does the contractor have to provide conduit for CableOne and CenturyLink?
Answer: No. Under the new APS powerline relocation option, the Contractor will not be undertaking any utility relocation/installation work, excluding the waterline relocation as shown on Sheet 27 of 27 of the Construction Improvement Plans

17. Question: 6. Will the North parking lot be included in the paving and grading part of the project?
Answer: Yes. See Construction Improvement Plan Sheet 9 for the general layout of this parking lot.

18. Question: 7. Will the contractor be required to submit a traffic control plan?
Answer: Yes. See Item 5, Page SP-3 of the Special Provisions and Section 701, Page T-7 of the Technical Specifications for the construction traffic control plan requirements.

19. Question: 8. Can heavy truck loads go down Roberts Drive or will they need to go another route?
Answer: Heavy construction equipment of any kind is not permitted to use Roberts Drive. The Contractor shall be allowed to use the public roadway to the west of the project that borders the hospital.

20. Where on the drawings would I find the sidewalk location?
Answer: See Sheet 11 of the Construction Improvement Plans. Please note that the reference to Concrete S/W is also to be used as a concrete apron to the west of the North Parking Lot area.

21. Question: If the sidewalk is 5' wide, how do you come up with 893 sq. ft.?
Answer: The square footage also accounts for the concrete apron feature shown on Sheet 11 of the Construction Improvement Plans.

22. Question: Are the concrete car bumpers (stops) actually 8' long? Measurements?
Answer: See item 6 above. The revised plan sheet addresses this question.

23. Question: page 27 of 27 on construction plans Item#59 "install 14" casing per AWC STD.E-9-24-1". is it 14" or 16"?
Answer: The casing diameter is 14-inches. AWC Standard Detail E-9-24-1, dated February 12, 2001, shows that for a 6-inch waterline, as required for this project by the Arizona Water Company, the casing diameter shall be 14-inches.

SIGN IN SHEET
MANDATORY PRE-BID WALK THROUGH MEETING

Date: August 16, 2012 10:00 AM

Title: Russell Road Reconstruction Project

RFP No.: 032712-1

Location: Public Works Administration Building

Company Name	Representative Name (print)	E-Mail Address	Phone No.
J. Bawicki Construction	DAN Baldwin	dbaldwin@bawicki.com	480-924-8016
Combs Const Co	ERIC LEMNITZER	ERIC @ COMBSAZ.COM	602 2374029
DJ's companies	Manuel Quintana		928 425-0602 928 812 0063
Visus Eng. Const. Inc.	Sonya Dungy	Sdungy@visusinc.com	480-833-8266
TeePee Contractors	Kermit Schafersman	Kermit@TeePeecontractors.com	520-280-1029
5-D Mining & Co.	Albert Curiel	Albertocuriel@ymail.com	602-513-0106
APS	Fredde Chism	Freddie.Chism@APS.com	928-812-0488
Tricom Corporation	Tom Bosseggio	tbosseggio@tricomcorp.com	480 443 0751
TSARCONI CORP	FRED BARCONI	barconcorp@cableone.net	928 425-5426

SIGN IN SHEET
MANDATORY PRE-BID WALK THROUGH MEETING

Date: August 16, 2012 10:00 AM

Title: Russell Road Reconstruction Project

RFP No.: 032712-1

Location: Public Works Administration Building

Company Name	Representative Name (print)	E-Mail Address	Phone No.
DBA Construction, Inc.	Craig Scheppe	Craig@dbaconstruction.net	(602) 442-6767
Jonovich Comp	David Burlingham	DBurlingham@Jonovichcomp.com	928-701-2289
SBBI	Matt Connell	mconnell@sbbiaz.com	520-604-6311
ABC Asphalt	Leo Barraza	leo@abcasphalt.com	602-358-4550
Dal Molin Excavating	Frank Dal Molin	Fdalmolin@dalmolincorp.com	928-812-1083
Roy Haught Excavating	Keith Wanthland	None	928-478-1609
Sullivan Paving	Randy Sullivan	Sulpav@cableone.net	928 425 4430 928 701 4434
Southwest Gas James KARBO	James KARBO	James.KARBO@swgas.com	928-402-6313
Intermountain West Civil Contractors	Stan Langham	BIDS@IMWCC.net	928-474-4998

SIGN IN SHEET
MANDATORY PRE-BID WALK THROUGH MEETING

Date: August 16, 2012 10:00 AM

Title: Russell Road Reconstruction Project

RFP No.: 032712-1

Location: Public Works Administration Building

Company Name	Representative Name (print)	E-Mail Address	Phone No.
5D Mining Hunt	Ben DalMolin	5dben@live.com	(928) 812-1038
Rick Lopez	ADOT		812-1103
Leonard Garcia	AWC	LGARCIA@AZWATER.com	928-812-2809
FREDDY RIOS	AWC	FRIOS@AZWATER.com	928. 473. 4433
CABLE ONE	Chris Guthrey	Christopher.guthrey@cableone.biz	928 812-3816
Gila County Finance	Yairie Bejarano		
Gila County Pubworks	Roland Boyer		
"	Steve Stratton		
	Steve Sanders		
C.h. Williams Consulting	Chuck Williams		

BIDDING SCHEDULE

Firm Name: _____

COST SUMMARY BREAK DOWN ROADWAY ITEMS

ITEM	DESCRIPTION	UNIT	ESTIMATED QUANTITIES	UNIT PRICE	EXTENDED AMOUNT
109	Force Account Work	L.S.	1	$75,000	$75,000
202	Removal of Structures and Obstructions	L.S.	1		
203	Earthwork	C.Y.	2,740		
211	Fill Construction	C.Y.	1,370		
301	Subgrade Preparation	S.Y.	11,864		
310	Aggregate Base Course - (ADOT Class II)	C.Y.	2,310		
321	Asphaltic Concrete - MAG (3/4") Mix	Ton	1,343		
340.1	Concrete Parking Block	EA.	30		
340.2	Concrete Sidewalk	S.F.	893		
340.3	Concrete Headwall, ADOT B-11.11, for (4) 42" CMPA	L.S.	1		
411	Asphaltic Concrete Friction Course	Ton	147		
520	Pedestrian Handrail	L.F.	88		
525	Shotcrete (MAG 525)(4" thick, 6x6x10 WWF)(colored)	S.F.	5,810		
621	Pipe, Corrugated Metal, 42"	LF	312		
607.2	New Sign Panel, STOP, R1-1, 30"x30"	EA.	2		
607.6	New Sign Panel, SPEED LIMIT 35, R2-1, 24"x30"	EA.	4		
701	Maintenance and Protection of Traffic	L.S.	1		

COST SUMMARY BREAK DOWN ROADWAY ITEMS *continued*

Firm Name:

ITEM	DESCRIPTION	UNIT	ESTIMATED QUANTITIES	UNIT PRICE	EXTENDED AMOUNT
708.1	Permanent Pavement Marking (Painted)(White)(4" Equiv)	L.F.	3,918		
708.2	Permanent Pavement Marking (Painted)(Yellow)(4" Equiv)	L.F.	4,899		
708.3	Permanent Pavement Marking (Thremoplastic)(ARROW)	L.F.	2		
708.4	Permanent Pavement Marking (Thremoplastic)(ONLY)	L.F.	2		
808.1	Pipe, Ductile Iron (6"Class 350)	L.F.	50		
808.2	Waterline Encasement, 16" Casing Pipe (AWC E-9-24-1)	L.F.	24		
808.3	45° Bend, Ductile Iron & Joint Restraint, 6"	EA.	4		
810	Erosion Control and Pollution Prevention Plan (SWPPP)	L.S.	1		
900	Mailbox Support System	L.S.	1		
901	Mobilization	L.S.	1		
902.2	Chain Link Fence, H=6', Security Type	L.F.	329		
902.3	Chain Link Fence, H=6', Non-security	L.F.	74		
902.4	Chain Link Fence, Gate, Double Swing, W=28', Security Type	EA.	1.5		
902.5	Chain Link Fence, Roll Gate, Single, W=14'	EA.	1		
913	Dumped RipRap, D_{50}=6"	C.Y.	88		

COST SUMMARY BREAK DOWN ROADWAY ITEMS *continued*

Firm Name:

ITEM	DESCRIPTION	UNIT	ESTIMATED QUANTITIES	UNIT PRICE	EXTENDED AMOUNT
913	Dumped RipRap, D_{50}=12"	C.Y.	326		
913	Gabion Baskets	C.Y.	48		
913.1	Gabion Mattress (12" deep)	C.Y.	24		
914*	Masonry Wall, ADOT Std.	S.F.	6,241		
924	Contractor Quality Control	L.S.	1		
925	Construction Survey and Layout and As-builts	L.S.	1		
				Total Base Bid	

*wall items are measured in square foot of the face of wall

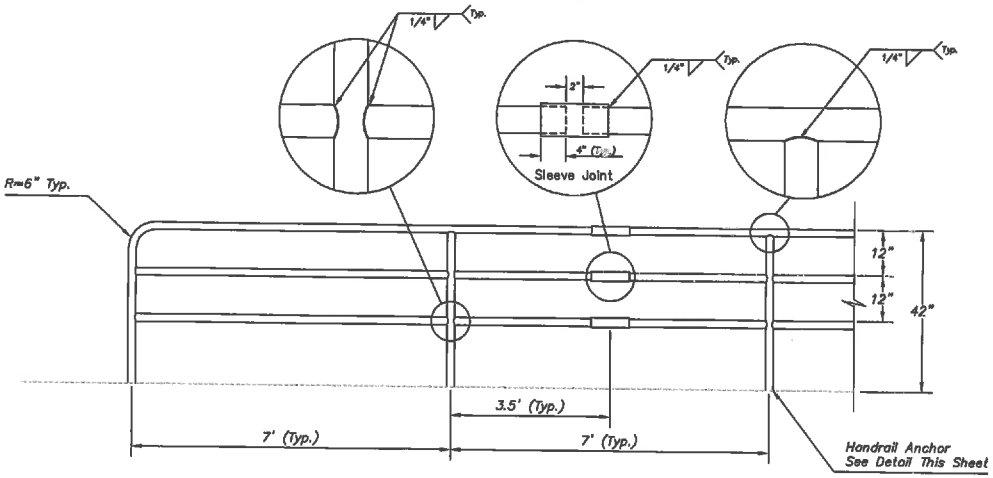

PEDESTRIAN HANDRAIL

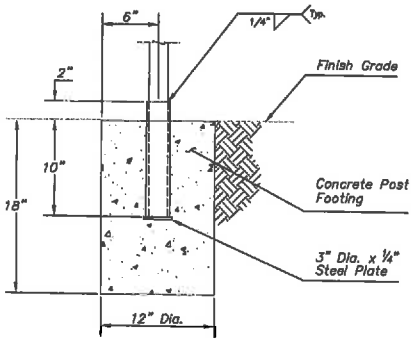

HANDRAIL ANCHOR DETAIL

D_{50} = 12"	
Rock Size (in)	Percent Passing
18	100
12	15–50
6	15

D_{50} = 6"	
Rock Size (in)	Percent Passing
9	100
6	15–50
3	15

RipRap Notes:

Rock shall be per ADOT Section 913. Where called for within the plans: rock size of D_{50} = 12" installed to a total depth = 24", rock size of D_{50} = 6" installed to a total depth = 12",

Install Filter Fabric Beneath Rock per ADOT Sec. 1014–4.03(A) or equal. Fabric Must be "Keyed" into Subgrade.

RIPRAP ROCK GRADATION & NOTES

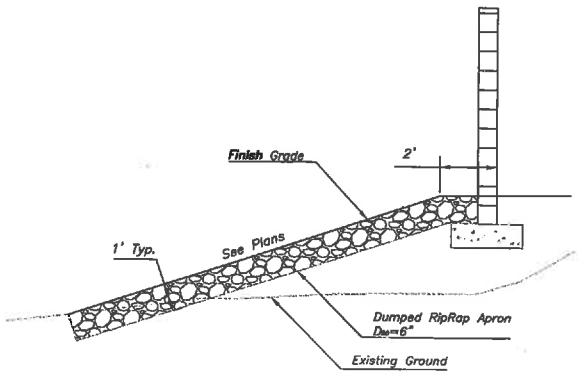

MASONRY WALL
Weep Hole Outlet Profile View

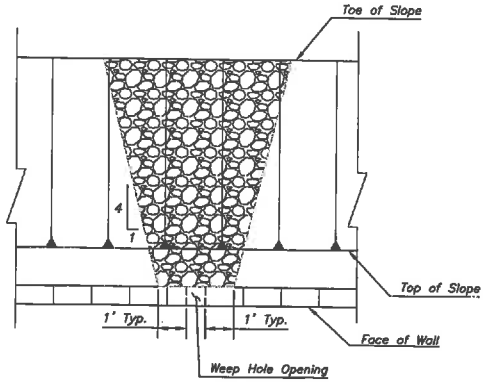

MASONRY WALL
Weep Hole Outlet Plan View

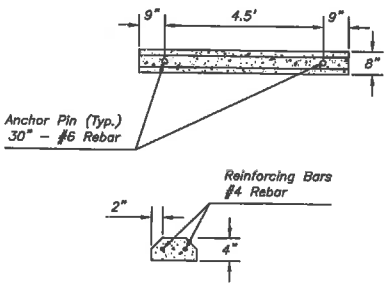

Concrete Parking Block Notes:
1. *Concrete shall be color tinted using Davis–Color /mix Ready/ dry/ color group standard/ San Diego Buff #5237 mixed per the manufacture's recommendation.*

PARKING BLOCK DETAIL
Concrete – Type AA per MAG Section 725

HANDRAIL NOTES:
1. *Grind all fillet weld edges smooth.*
2. *All steel pipe shall be 2" Schedule 40. All sleeves shall be 2–½" Schedule 40 steel pipe. Pipe diameters are nominal.*
3. *Maximum spacing between sleeve joints shall be 28 feet.*
4. *The Contractor shall submit working drawings for approval. Working drawings shall consist of shop drawings and field working drawingsshall consist of shop drawings and a field inspection plan.*
5. *All handrails shall be primed with one coat primer that is compatible with enamel. Two final coats shall be applied to match Federal Std. No. 595A Colors, Chip No. 20252, Light Brown (Sandstone.).*
6. *Unless otherwise noted radius dimensions are to center of pipe.*
7. *Concrete post footing shall be Per MAG Section 725, Class B.*

C.L. Williams Consulting, Inc.
Civil Engineering and Resource Management
621 South Hillside Lane
Pinetop, Arizona 85935
Phone: (928) 367-2248 Fax: (928) 367-2348

RUSSELL ROAD
ROADWAY IMPROVEMENT PLANS

HANDRAIL & MISC. DETAILS

DLA COUNTY

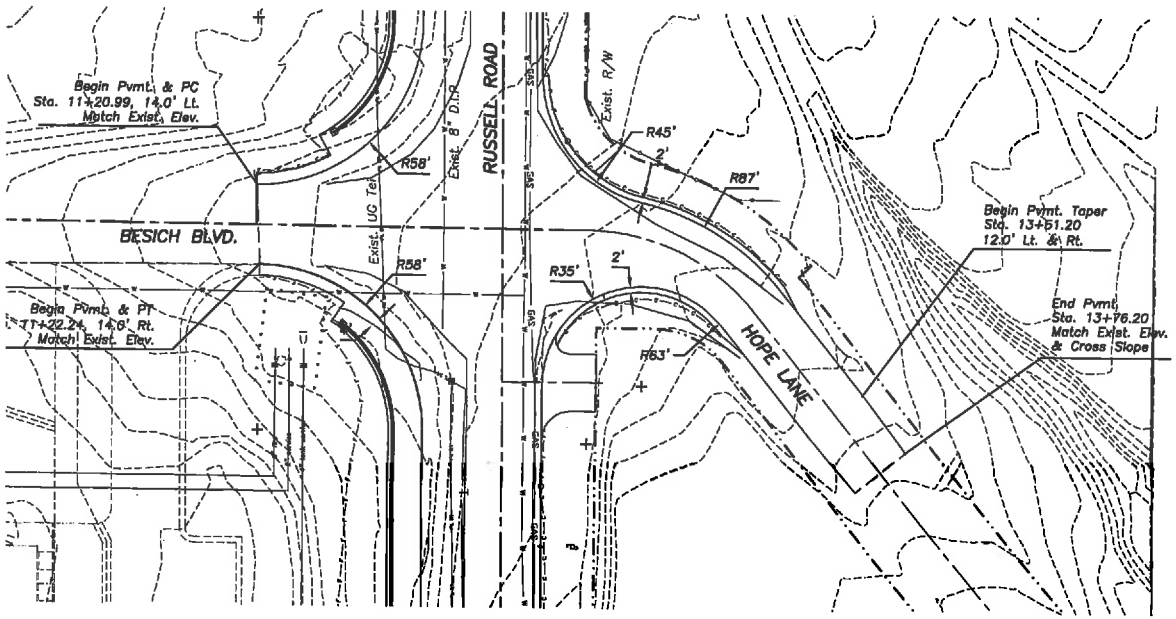

BESICH BOULEVARD – HOPE LANE

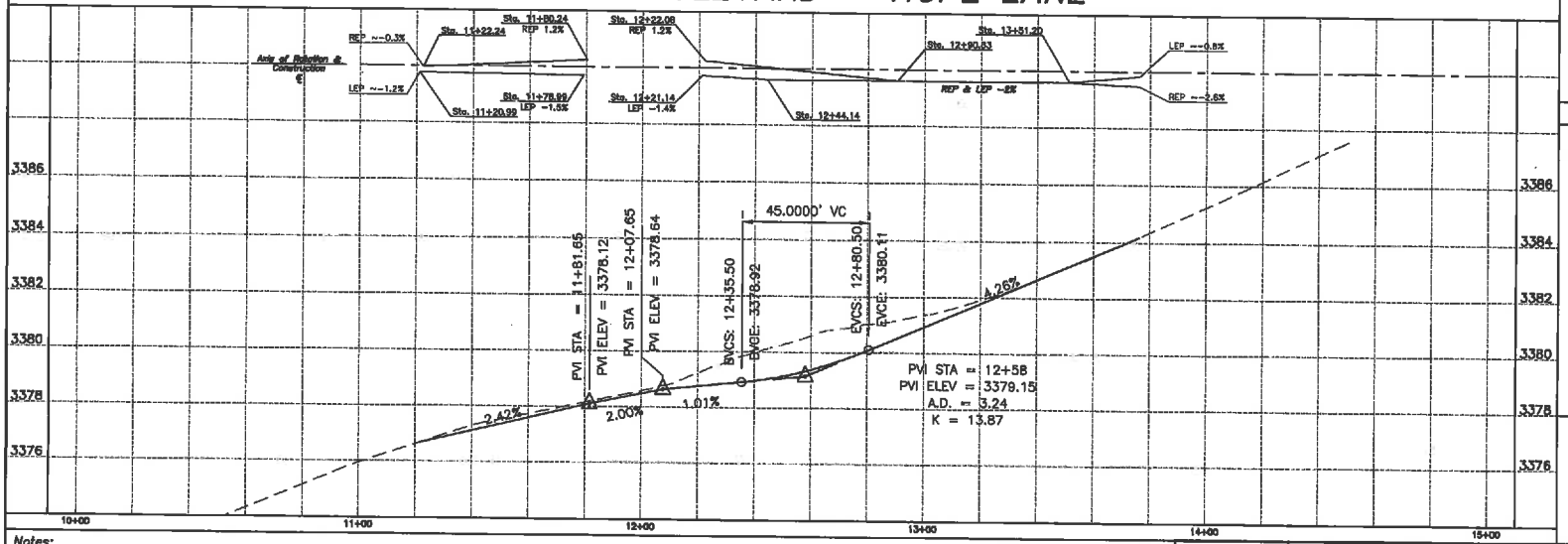

Notes:

1. - - -

GRAPHIC SCALE

(IN FEET)
1 inch = 80 ft.

CONSTRUCTION NOTES

NO.	DESCRIPTION	EST. QTY. THIS SHEET
	PAVING	
1	INSTALL PAVEMENT – SEC .1 SEE DTL. SHT. 3 1/2" A.C.F.C. (ADOT 407) 3" A.C. (MAG 3/4") 6" A.B.C. (ADOT Class II)	851 S.Y. 24 TON 142 TON 190 C.Y.
	ESTIMATED EARTHWORK	
	EXCAVATION	454 C.Y.
	EMBANKMENT	0 C.Y.
	REMOVALS/ADJUSTMENTS	
101	REMOVE EXIST. PAVEMENT	867 S.Y.
126	REMOVE DRIVEWAY	0 S.F.

CALL TWO WORKING DAYS BEFORE YOU DIG
1-800-STAKE-IT
1-800-782-5348
BLUE STAKE CENTER
(SUNRISE MANOR COUNTY)

C.L.WILLIAMS CONSULTING, INC.
CIVIL ENGINEERING AND RESOURCE MANAGEMENT
621 South Hillside Lane
Pinetop, Arizona 85935
Phone: (928) 367-2248 Fax: (928) 367-2348

DRAWING TITLE
RUSSELL ROAD
ROADWAY IMPROVEMENT PLANS

PLAN & PROFILE
STA. B.O.P. to E.O.P.

SCALE HORIZ. 1" = 20'
SCALE VERT. 1" = 2'

DES. BY:	JAN	3/12
DRN. BY:	JAN	3/12
REV. BY:	JAN	3/12
APP. BY:	CLW	3/12

JOB NUMBER
CLA COUNTY

DRAWING NUMBER
20
of 27

GILA COUNTY
CONTRACT NO. 032712-1

THIS AGREEMENT, made and entered into this 18th day of September, **2012**, by and between Gila County, a political subdivision of the State of Arizona, party of the first part, hereinafter designated the **OWNER**, and Visus Engineering Construction of the City of Mesa, County of Maricopa, State of Arizona, party of the second part, hereinafter designated the **CONTRACTOR**.

WITNESSETH: That the said **Contractor**, for and in consideration of the sum to be paid him by the said **Owner**, in the manner and at the time hereinafter provided, and of the other covenants and agreements herein contained, and under the penalties expressed in the bond hereto attached, hereby agrees, for himself, his heirs, administrators, successors, and assigns as follows:

ARTICLE I - SCOPE OF WORK: The **Contractor** shall furnish any and all plant materials, labor, construction equipment, and services, required for performing all work for construction for **Bid No. 032712-1 RUSSELL ROAD RECONSTRUCTION PROJECT, GLOBE, ARIZONA** in accordance with the plans and these specifications, and to completely and totally construct the same and install the material herein for the **Owner**, in a good and workmanlike and substantial manner and to the satisfaction of the **Owner** through its Engineers and under the direction and supervision of the Engineer, or his properly authorized agents and strictly pursuant to and in conformity with the Specifications prepared by the Engineers for the **Owner**, and with such modifications of the same and other documents that may be made by the **Owner** through the Engineer, or his properly authorized agents, as provided herein. Once the Bid has been awarded the bid number 032204-1 will become the Contract Number.

ARTICLE II - CONTRACT DOCUMENTS: The attached "Call for Bids", "Technical Specifications", "General Provisions", "Special Provisions", "Proposal", "Bidding Schedule", "Bid Bond", "Qualification & Certification Forms", "Reference List", "Affidavit of Non-Collusion", "Subcontractor Certification", "Employment Laws Acknowledgment", "Checklist & Addenda Acknowledgment", "Performance Bond", "Labor and Materials Bond", "Contract Performance Bond", and Plans thereto, if any, are by this reference made a part of this Contract to the same extent as if set forth herein in full. In the event of any conflict or any inconsistency in the documents, controlling weight shall be assigned in the following order: the Contract; the Technical Specifications; the Special Provisions; the General Provisions; all other documents. Contract is considered invalid unless signed by the Gila County Board of Supervisors.

ARTICLE III – SAFETY AND LOSS CONTROL: The Gila County Safety and Loss Control booklet must be read and signed by all working at the job site.

During the pre-construction meeting a time will be set for the Gila County QA/QC Safety Compliance Officer for a safety meeting. For every safety meeting the Contractor shall invite the QA/QC Safety Compliance Officer and shall give at least a twenty-four (24) hour notice.

ARTICLE IV – INDEMNIFICATION CLAUSE: The Contractor agrees to indemnify and save harmless the County of Gila, its officers, agents and employees, and any jurisdiction or agency issuing permits for any work included in the project, their officers, agents and employees, hereinafter referred to as indemnitee, from all suits and claims, including attorney's fees and cost of litigation, actions, loss, damage, expense, cost or claims of any character or any nature arising out of the work done in fulfillment of the terms of this Contract or on account of any act, claim or amount arising or recovered under workers' compensation law or arising out of the failure of the Contractor to conform to any statutes, ordinances, regulation, law or court decree. It is agreed that the Contractor will be responsible for primary loss investigation, defense and judgment costs where this contract of indemnity applies. In consideration of the award of this contract, the Contractor agrees to waive all rights of subrogation against the County, its officers, officials, agents and employees for losses arising from the work performed by the Contractor for the County.

ARTICLE V – INSURANCE REQUIREMENTS: Contractor and subcontractors shall procure and maintain until all of their obligations have been discharged, including any warranty periods under this Contract are satisfied, insurance against claims for injury to persons or damage to property which may arise from or in connection with the performance of the work hereunder by the Contractor, his agents, representatives, employees or subcontractors.

The insurance requirements herein are minimum requirements for this Contract and in no way limit the indemnity covenants contained in this Contract.

The County in no way warrants that the minimum limits contained herein are sufficient to protect the Contractor from liabilities that might arise out of the performance of the work under this Contract by the Contractor, his agents, representatives, employees, or subcontractors. Contractor is free to purchase such additional insurance as may be determined necessary.

A. **MINIMUM SCOPE AND LIMITS OF INSURANCE** - Contractor shall provide coverage with limits of liability not less than those stated below:

1. **Commercial General Liability – Occurrence Form**
   Policy shall include bodily injury, property damage, broad form contractual liability and XCU coverage.
   - General Aggregate $2,000,000
   - Products – Completed Operations Aggregate $1,000,000
   - Personal and Advertising Injury $1,000,000
   - Each Occurrence $1,000,000

   a. The policy shall be endorsed to include the following additional insured language: **"The County of Gila shall be named as an additional insured with respect to**

liability arising out of the activities performed by, or on behalf of the Contractor".

2. **Automobile Liability**
   Bodily injury and property damage for any owned, hired, and non-owned vehicles used in the performance of this Contract.

Combined Single Limit (CSL)	$1,000,000

   a. The policy shall be endorsed to include the following additional insured language: **"The County of Gila shall be named as an additional insured with respect to liability arising out of the activities performed by, or on behalf of the Contractor, including automobiles owned, leased, hired or borrowed by the Contractor".**

3. **Worker's Compensation and Employers' Liability**

Workers' Compensation	Statutory
Employers' Liability	
~~Each Accident~~	~~$100,000~~
Disease – Each Employee	$100,000
Disease – Policy Limit	$500,000

   a. Policy shall contain a **waiver of subrogation** against the County of Gila.

B. **ADDITIONAL INSURANCE REQUIREMENTS:** The policies shall include, or be endorsed to include, the following provisions:

1. On insurance policies where the County of Gila is named as an additional insured, the County of Gila shall be an additional insured to the full limits of liability purchased by the Contractor even if those limits of liability are in excess of those required by this Contract.
2. The Contractor's insurance coverage shall be primary insurance and non-contributory with respect to all other available sources.
3. Coverage provided by the Contractor shall not be limited to the liability assumed under the indemnification provisions of this Contract.

C. **NOTICE OF CANCELLATION:** Each insurance policy required by the insurance provisions of this Contract shall provide the required coverage and shall not be suspended, voided, canceled, reduced in coverage or endorsed to lower limits except after thirty (30) days prior written notice has been given to the County. Such notice shall be sent directly to the **Gila County Purchasing Department, 1400 E. Ash St., Globe, AZ 85501** and shall be sent by certified mail, return receipt requested.

D. **ACCEPTABILITY OF INSURERS:** Insurance is to be placed with insurers duly licensed or approved unlicensed companies in the state of Arizona and with an "A.M. Best" rating of not less than B+ VI. The County in no way warrants that the above-required minimum insurer rating is sufficient to protect the Contractor from potential insurer insolvency.

E. **VERIFICATION OF COVERAGE:** Contractor shall furnish the County with certificates of insurance (ACORD form or equivalent approved by the County) as required by this Contract.

The certificates for each insurance policy are to be signed by a person authorized by that insurer to bind coverage on its behalf.

All certificates and endorsements are to be received and approved by the County before work commences. Each insurance policy required by this Contract must be in effect at or prior to commencement of work under this Contract and remain in effect for the duration of the project. Failure to maintain the insurance policies as required by this Contract or to provide evidence of renewal is a material breach of contract.

All certificates required by this Contract shall be sent directly to the **Gila County Purchasing Department, 1400 E. Ash St., Globe, AZ 85501**. The County project/contract number and project description shall be noted on the certificate of insurance. The County reserves the right to require complete, certified copies of all insurance policies required by this Contract at any time.

F. **SUBCONTRACTORS:** Contractors' certificate(s) shall include all subcontractors as additional insured's under its policies **or** Contractor shall furnish to the County separate certificates and endorsements for each subcontractor. All coverage's for subcontractors shall be subject to the minimum requirements identified above.

G. **APPROVAL:** Any modification or variation from the insurance requirements in this Contract shall be made by the County Attorney, whose decision shall be final. Such action will not require a formal Contract amendment, but may be made by administrative action.

ARTICLE VI - TIME OF COMPLETION: The Contractor further covenants and agrees, at his own proper cost and expense, to do all work and furnish all materials, labor, construction equipment, and services for performing all of the work for construction of said improvements and to completely construct the same and install the material therein, as called for by this agreement free and clear of all claims, liens, and charges whatsoever, in the manner and under the conditions specified within the time, or times, stated in the Proposal.

Work on this project shall start within **no later than ten (10) Days of the Notice To Proceed,** and shall be completed within the following limits:

SCHEDULE:

For construction in the contract documents, the project shall be completed within **One Hundred and Twenty (120) Days of the Notice To Proceed.**

It is expressly understood and agreed that in case of failure on the part of the Contractor, for any reason, except with the written consent of the Engineer, to complete the work to the satisfaction of the Engineer and within the aforesaid time limits, the Owner may deduct from any money due, or which may become due the Contractor, as liquidated damages, an amount as fixed by the following schedule:

WORK ITEM	DAILY CHARGE PER CALENDAR DAY
All work not complete within the above specified time after start of work.	$2,000.00

If no money shall be due the Contractor, the Owner shall have a cause of action to recover against the Contractor in a court of competent jurisdiction, liquidated damages as fixed by the above schedule; said deduction to be made, or said sum to be recovered, not as a penalty, but as liquidated damages; provided, however, that upon receipt of written notice from the Contractor, of the existence of causes, as herein provided, over which said Contractor has no control and which must delay the completion of the said work or any delay occasioned by the Owner, the Engineer may extend the period hereinafter specified for the completion of said work in accordance with the specifications and in such case, the Contractor shall become liable for said liquidated damages for delays commencing from date said extension period shall expire.

ARTICLE VII - CANCELLATION: This agreement is subject to cancellation pursuant to **A.R.S. §38-511** and **GENERAL PROVISION 80-09 DEFAULT AND TERMINATION OF CONTRACT.**

ARTICLE VIII - PAYMENTS: The Contractor shall make an estimate of the work performed during the preceding month and submit the same to the Engineer for checking. On or before ***thirty (30) days*** after the certified and approved estimate of the work is received by the Owner, the Owner shall pay to the Contractor ninety percent (90%) of the value of said work in place, as approved by the Engineer. The balance of ten percent (10%) of the estimate shall be retained by the Owner until the time of final payment and acceptance of said work, as per **A.R.S. §34-221(A)(2).**

In order to receive payment the Contractor shall have a current W-9 Form on file with the County unless required by law.

All invoices submitted by the Contractor shall include at least the following but not be limited to:

- Purchase Order Number
- Contract Number
- Project Title
- Invoice Number
- Vendor Name and Address
- Description of Service

ARTICLE IX – LAWS AND ORDINANCES: This agreement shall be enforced under the laws of the State of Arizona. The Contractor shall maintain in current status all Federal, State, and Local licenses and permits required for the operation of the business conducted by the Contractor.

The **Contractor** shall comply with the applicable provisions of the Americans with Disabilities Act **(Public Law 101-336, 42 U.S.C. 12101-12213)** and applicable Federal regulations under the Act.

ARTICLE X – LEGAL ARIZONA WORKERS ACT COMPLIANCE: Contractor hereby warrants that it will at all times during the term of this Contract comply with all federal immigration laws applicable to Contractor's employment of its employees, and with the requirements of A.R.S. § 23-214 (A) (together the "State and Federal Immigration Laws"). Contractor shall further ensure that each subcontractor who performs any work for Contractor under this contract likewise complies with the State and Federal Immigration Laws.

County shall have the right at any time to inspect the books and records of Contractor and any subcontractor in order to verify such party's compliance with the State and Federal Immigration Laws.

Any breach of Contractor's or any subcontractor's warranty of compliance with the State and Federal Immigration Laws, or of any other provision of this section, shall be deemed to be a material breach of this Contract subjecting Contractor to penalties up to and including suspension or termination of this Contract. If the breach is by a subcontractor, and the subcontract is suspended or terminated as a result, Contractor shall be required to take such steps as may be necessary to either self-perform the services that would have been provided under the subcontract or retain a replacement subcontractor as soon as possible so as not to delay project completion.

Contractor shall advise each subcontractor of County's rights, and the subcontractor's obligations, under this Article by including a provision in each subcontract substantially in the following form:

"Subcontractor hereby warrants that it will at all times during the term of this contract comply with all federal immigration laws applicable to Subcontractor's employees, and with the requirements of A.R.S. §23-214 (A). Subcontractor further agrees that County may inspect the Subcontractor's books and records to insure that Subcontractor is in compliance with these requirements. Any breach of this paragraph by Subcontractor will be deemed to be a material breach of this contract subjecting Subcontractor to penalties up to and including suspension or termination of this contract."

Any additional costs attributable directly or indirectly to remedial action under this Article shall be the responsibility of Contractor. In the event that remedial action under this Article results in delay to one or more tasks on the critical path of Contractor's approved construction or critical milestones schedule, such period of delay shall be deemed excusable delay for which Contractor shall be entitled to an extension of time, but not costs.

ARTICLE XI – ANTI-TERRORISM WARRANTY: Pursuant to A.R.S. § 35-393.06(B) and 35-301.06(A) the Contractor certifies that it does not have scrutinized business operations in Iran or Sudan and that they are in compliance with the Export Administration Act and not on the Excluded Parties List.

IN WITNESS WHEREOF, two (2) identical counterparts of this contract, each of which shall for all purposes be deemed an original thereof, have been duly executed by the parties hereinabove named, on the date and year first above written.

In return for the performance of this Contract by the **Contractor**, the **Owner** agrees to pay the amount of $ 720,000 **INCLUDING ALL APPLICABLE TAXES** through a payment schedule as described in the Contract documents and as may be modified and executed by change orders and by final quantities.

The **Contractor** agrees that this contract, as awarded, is for the following work, and understands that payment for the total work will be made on the basis of the indicated amount(s), as bid in the Proposal and attached Bidding Schedule for:

RUSSELL ROAD RECONSTRUCTION PROJECT
BID NO. 032712-1

OWNER:

GILA COUNTY BOARD OF SUPERVISORS

Tommie C. Martin, Chairman, Board of Supervisors

CONTRACTOR:

Contractor Signature

Jeffrey A. Kerr - CEO
Print Name

Witness (If Contractor is Individual)

ATTEST:

Marian Sheppard, Chief Deputy Clerk of the Board

APPROVED AS TO FORM:

Bryan B. Chambers, Chief Deputy County Attorney
***for* Daisy Flores, County Attorney**

GILA COUNTY
CONTRACT PERFORMANCE WARRANTY

I, Jeffrey A Kerr, representing
Ursus Engineering Const Inc (company name)

do hereby warranty the work performed for the:

RUSSELL ROAD RECONSTRUCTION PROJECT, GLOBE, ARIZONA

for a period of **two years** from completion of said work.

Said work shall be free from defects which would cause the work not to perform in it's intended manner.

(Officer, Partner, Owner) 8/28/12 Date

BIDDING SCHEDULE

RUSSELL ROAD RECONSTRUCTION PROJECT
GILA COUNTY, ARIZONA

We agree to provide all work and material necessary to complete the project as shown on the plans and specifications for the following Contract Price:

Firm Name: Visus Engineering Construction, Inc.

TOTAL CONTRACT PRICE, for the sum of $ 730,000

WRITTEN TOTAL CONTRACT PRICE

Seven hundred thirty thousand **Dollars**

and 0 **Cents.**

This Contract Price is based upon the Bidder's quantities and unit prices tabulated on Pages BS-2 through BS-4 of the Proposal. The Bidder agrees that the Contract Price will be payment in full for all work shown on the plans and described in the Contract Documents.

Any authorized increases or decreases to the work shall be authorized by Change Order. The Contract Price shall be increased or decreased by the amount of work or material increased or decreased at the following Bid Unit Prices.

BIDDING SCHEDULE

Firm Name: Visus Engineering Construction, Inc.

COST SUMMARY BREAK DOWN ROADWAY ITEMS

ITEM	DESCRIPTION	UNIT	ESTIMATED QUANTITIES	UNIT PRICE	EXTENDED AMOUNT
109	Force Account Work	L.S.	1	$75,000	$75,000
202	Removal of Structures and Obstructions	L.S.	1	25,000-	25,000-
203	Earthwork	C.Y.	2,740	8-	21,920-
211	Fill Construction	C.Y.	1,370	10-	13,700-
301	Subgrade Preparation	S.Y.	11,864	2-	23,728-
310	Aggregate Base Course - (ADOT Class II)	C.Y.	2,310	45-	103 950.-
321	Asphaltic Concrete - MAG (3/4") Mix	Ton	1,343	82-	11,0126.-
340.1	Concrete Parking Block	EA.	30	40-	1200-
340.2	Concrete Sidewalk	S.F.	893	3-	2679-
340.3	Concrete Headwall, ADOT B-11.11, for (4) 42" CMPA	L.S.	1	10,000-	10,000-
411	Asphaltic Concrete Friction Course	Ton	147	105-	15,435-
520	Pedestrian Handrail	L.F.	88	50-	4400-
525	Shotcrete (MAG 525)(4" thick, 6x6x10 WWF)(colored)	S.F.	5,810	5-	29,050-
621	Pipe, Corrugated Metal, 42"	LF	312	90-	28,080-
607.2	New Sign Panel, STOP, R1-1, 30"x30"	EA.	2	300-	600-
607.6	New Sign Panel, SPEED LIMIT 35, R2-1, 24"x30"	EA.	4	250-	1000-
701	Maintenance and Protection of Traffic	L.S.	1	23581-	23581-

COST SUMMARY BREAK DOWN ROADWAY ITEMS *continued*

Firm Name:

ITEM	DESCRIPTION	UNIT	ESTIMATED QUANTITIES	UNIT PRICE	EXTENDED AMOUNT
708.1	Permanent Pavement Marking (Painted)(White)(4" Equiv)	L.F.	3,918	1-	3918-
708.2	Permanent Pavement Marking (Painted)(Yellow)(4" Equiv)	L.F.	4,899	1-	4899-
708.3	Permanent Pavement Marking (Thremoplastic)(ARROW)	L.F.	2	150-	300-
708.4	Permanent Pavement Marking (Thremoplastic)(ONLY)	L.F.	2	150-	300-
808.1	Pipe, Ductile Iron (6"Class 350)	L.F.	50	50-	2500-
808.2	Waterline Encasement, 16" Casing Pipe (AWC E-9-24-1)	L.F.	24	90-	2160-
808.3	45° Bend, Ductile Iron & Joint Restraint, 6"	EA.	4	500-	2000-
810	Erosion Control and Pollution Prevention Plan (SWPPP)	L.S.	1	6000-	6000-
900	Mailbox Support System	L.S.	1	1000-	1000-
901	Mobilization	L.S.	1	25,000-	25,000-
902.2	Chain Link Fence, H=6', Security Type	L.F.	329	23-	7567-
902.3	Chain Link Fence, H=6', Non-security	L.F.	74	35-	2590-
902.4	Chain Link Fence, Gate, Double Swing, W=28', Security Type	EA.	1.5	3000-	4500-
902.5	Chain Link Fence, Roll Gate, Single, W=14'	EA.	1	1200- AK	1200-
913	Dumped RipRap, D_{50}=6"	C.Y.	88	69- AK	6072-

COST SUMMARY BREAK DOWN ROADWAY ITEMS *continued*

Firm Name:

ITEM	DESCRIPTION	UNIT	ESTIMATED QUANTITIES	UNIT PRICE	EXTENDED AMOUNT
913	Dumped RipRap, D_{50}=12"	C.Y.	326	.75 - /c	24,450 -
913	Gabion Baskets	C.Y.	48	175 - /c	8400 -
913.1	Gabion Mattress (12" deep)	C.Y.	24	170 - /c	4080 -
914*	Masonry Wall, ADOT Std.	S.F.	6,241	15 -	93615 -
924	Contractor Quality Control	L.S.	1	15,000 -	15,000 -
925	Construction Survey and Layout and As-builts	L.S.	1	15,000 -	15,000 -
				Total Base Bid	720,000 -

*wall items are measured in square foot of the face of wall

RUSSELL ROAD IMPROVEMENT PROJECT

ITEM	DESCRIPTION	AMOUNT	UNIT PRICE	EXTENDED AMOUNT		EXPLANATION
OVERRUNS						
109	Force account work ls		$ 75,000.00	$ 2,967.86		See CLW memo regarding Change Order explanation
203	Earthwork cy	737	$ 8.00	$ 5,896.00		Necessary due to unforeseen subsurface condition(Old Water Tank Wash channel uncovered) at Hope Lane
211	Fill construction cy	582	$ 10.00	$ 5,820.00		Necessary due to unforeseen subsurface condition(Old Water Tank Wash channel uncovered at Hope Lane
301	Subgrade preparation sy	148	$ 2.00	$ 296.00		Necessary due to additional paved shoulder (Lt. Side) at the culvert for Russell Road & Regrading for northern segment of Russell Road near Roberts Drive
310	Aggregate Base Course- ADOT Class II cy	134	$ 45.00	$ 6,030.00		Necessary due to the additional pavement section used for the intersection of Hope Lane at Russell Road. Increased depth of material to 5" / 10" for heavy truck traffic.
321	Asphaltic Concrete - MAG 3/4" mix ton	217	$ 82.00	$ 17,794.00		Necessary due to the additional pavement section used for the intersection of Hope Lane at Russell Road. Increased depth of material to 5" / 10" for heavy truck traffic.
520	Pedestrian Handrail Lf	46	$ 50.00	$ 2,300.00		Necessary due to site conditions at the upstream end of the culvert so added for pedestrian safety
708.1	Permanent Pavement Marking - Painted white 4" equiv. Lf	1003	$ 1.00	$ 1,003.00		Striping was added in the field due to site specific conditions.
708.2	Permanent Pavement Marking - Painted yellow 4" equiv Lf	561	$ 1.00	$ 561.00		Striping was added in the field due to site specific conditions.
902.3	Chain link fence H=6' non-security type Lf	289	$ 35.00	$ 10,115.00		Item was not included within the Bid Schedule but was shown within the Plans.
913	Dumped riprap 050=12" cy	75	$ 75.00	$ 5,625.00		Minor additional rock to account for finish grade and slope field conditions.
UNDER RUNS						
411	Asphaltic concrete friction course ton (ACFC)	-110	$ 105.00	$ (11,550.00)		Removed from project due to onset of cold weather.
913	Gabion baskets cy -	-4	$ 175.00	$ (700.00)		Adjustment to planned quantity to account for field conditions.
	TOTAL =			**$ 46,157.86**		

CHANGE ORDER DOCUMENT

CHANGE ORDER

PROJECT:	Gila County	CHANGE ORDER NUMBER:	1	OWNER ☐
	Russell Rd Reconstruction	DATE:	11/15/2012	ENGINEER ☐
		ENGINEER PROJECT NO.:	032712-1	CONTRACTOR ☐
TO CONTRACTOR:		CONTRACT DATE:	10/15/2012	FIELD ☐
	Visus Engineering Construction, Inc.	CONTRACT FOR:	$720,000.00	OTHER ☐

The Contract is changed as follows:

New 4-inch PVC Fiber Optic Conduits Duct Bank Request by Gila County

The original (Contract Sum) was	$720,000
Net change by previously authorized Change Orders	$0
The (Contract Sum)prior to this Change Order was	$720,000
The (Contract Sum) will be (increased) (decreased) (**unchanged**) by this Change Order in the amount of	$17,666.97
The new (Contract Sum) including this Change Order will be	$720,000
The Contract Time will be (**increased**) decreased) (unchanged) by (3) days	
The date of Substantial Completion as of the date of this Change Order therefore is	February 17,2013

(NOTE: This Change Order does not include changes in the Construct Sum or Contract Time which have been authorized by Construction Change Directive until the cost and time have been agreed upon by both the Owner and Contractor, in which case a Change Order is executed to supersede the Construction Change Directive.)

NOT VALID UNTIL SIGNED BY THE ENGINEER, CONTRACTOR AND OWNER.

ENGINEER	CONTRACTOR *(Firm name)*	OWNER *(Firm Name)*
C.L. Williams Con. Inc	Visus Engineering Construction Inc.	Gila County
621 S. HILLSIDE LN	1831 N. Rochester Mesa Az 85205	745 N. Rose Mofford Way Globe, AZ. 85501
Address	Address	Address
Joseph M. Alwin		
BY *(Signature)*	BY (Signature)	BY (Signature)
JOSEPH M. ALWIN	JEFFREY A KERR	Steve Sanders
(Typed Name)	*(Typed Name)*	*(Typed Name)*
11/24/2012	11/21/12	11/27/12
Date	Date	Date

CHANGE ORDER DOCUMENT

CHANGE ORDER

PROJECT: Gila County	CHANGE ORDER NUMBER: 2		OWNER ☐
Russell Rd Reconstruction	DATE:	11/15/2012	ENGINEER ☐
	ENGINEER PROJECT NO.:	032712-1	CONTRACTOR ☐
TO CONTRACTOR:	CONTRACT DATE:	10/15/2012	FIELD ☐
Visus Engineering Construction, Inc.	CONTRACT FOR:	$720,000.00	OTHER ☐

The Contract is changed as follows:

New Waterline Changes Request by Arizona Water Company and approved by Gila County

The original (Contract Sum) was	$720,000
Net change by previously authorized Change Orders	$0
The (Contract Sum)prior to this Change Order was	$720,000
The (Contract Sum) will be (increased) (decreased) (**unchanged**) by this Change Order in the amount of	$19,549.05
The new (Contract Sum) including this Change Order will be	$720,000
The Contract Time will be (**increased**) decreased) (unchanged) by (3) days	
The date of Substantial Completion as of the date of this Change Order therefore is	February 17,2013

(NOTE: This Change Order does not include changes in the Construct Sum or Contract Time which have been authorized by Construction Change Directive until the cost and time have been agreed upon by both the Owner and Contractor, in which case a Change Order is executed to supersede the Construction Change Directive.)

NOT VALID UNTIL SIGNED BY THE ENGINEER, CONTRACTOR AND OWNER.

ENGINEER	CONTRACTOR *(Firm name)*	OWNER *(Firm Name)*
C.L. Williams Con. Inc	Visus Engineering Construction, Inc	Gila County
621. S. HILLSIDE LN.	1831 N. Rochester Mesa Az 85205	745 N. Rose Mofford Way
Address	Address	Address Globe, AZ. 85501
BY *(Signature)*	BY (Signature)	BY (Signature)
JOSEPH M. ALWIN	Jeffrey A Allen	Steve Sanders
(Typed Name)	*(Typed Name)*	*(Typed Name)*
11/24/2012	11/21/12	11/27/12
Date	Date	Date

CHANGE ORDER DOCUMENT

CHANGE ORDER

PROJECT: Gila County	CHANGE ORDER NUMBER:	3	OWNER ☐
Russell Rd Reconstruction	DATE:	11/15/2012	ENGINEER ☐
	ENGINEER PROJECT NO.:	032712-1	CONTRACTOR ☐
TO CONTRACTOR:	CONTRACT DATE:	10/15/2012	FIELD ☐
Visus Engineering Construction, Inc.	CONTRACT FOR:	$720,000.00	OTHER ☐

The Contract is changed as follows:

Lowering of a 1-inch Gas Sewer Service which was in conflict of the new parking lot.

This was completed on a Time and Material Basis.

The original (Contract Sum) was	$720,000
Net change by previously authorized Change Orders	$0
The (Contract Sum)prior to this Change Order was	$720,000
The (Contract Sum) will be (increased) (decreased) (**unchanged**) by this Change Order in the amount of	$1,243.79
The new (Contract Sum) including this Change Order will be	$720,000
The Contract Time will be (**increased**) decreased) (unchanged) by (0) days	
The date of Substantial Completion as of the date of this Change Order therefore is	February 17,2013

(NOTE: This Change Order does not include changes in the Construct Sum or Contract Time which have been authorized by Construction Change Directive until the cost and time have been agreed upon by both the Owner and Contractor, in which case a Change Order is executed to supersede the Construction Change Directive.)

NOT VALID UNTIL SIGNED BY THE ENGINEER, CONTRACTOR AND OWNER.

ENGINEER	CONTRACTOR *(Firm name)*	OWNER *(Firm Name)*
C.L. Williams Con. Inc	Visus Engineering Construction, Inc	Gila County
621 S. Hillside Ln	1831 N. Rochester Mesa Az 85205	745 N. Rose Mofford Way
Address	Address	Address Globe, AZ. 85501
BY *(Signature)*	BY (Signature)	BY (Signature)
JOSEPH M. ALWIN	Jeffrey A Kerr	Steve Sanders
(Typed Name)	*(Typed Name)*	*(Typed Name)*
11/24/2012	11/21/12	11/27/12
Date	Date	Date

CHANGE ORDER DOCUMENT

CHANGE ORDER

PROJECT: Gila County	CHANGE ORDER NUMBER:	4	OWNER ☐
Russell Rd Reconstruction	DATE:	11/15/2012	ENGINEER ☐
	ENGINEER PROJECT NO.:	032712-1	CONTRACTOR ☐
TO CONTRACTOR:	CONTRACT DATE:	10/15/2012	FIELD ☐
Visus Engineering Construction, Inc.	CONTRACT FOR:	$720,000.00	OTHER ☐

The Contract is changed as follows:

Excavated and Lowered of a 4-inch Communication Conduit/ Water Service & Relocated a Back Flow Preventor

This was completed on a Time and Material Basis.

The original (Contract Sum) was	$720,000
Net change by previously authorized Change Orders	$0
The (Contract Sum)prior to this Change Order was	$720,000
The (Contract Sum) will be (increased) (decreased) (**unchanged**) by this Change Order in the amount of	$1,702.68
The new (Contract Sum) including this Change Order will be	$720,000
The Contract Time will be (**increased**) decreased) (unchanged) by (0) days	
The date of Substantial Completion as of the date of this Change Order therefore is	February 17,2013

(NOTE: This Change Order does not include changes in the Construct Sum or Contract Time which have been authorized by Construction Change Directive until the cost and time have been agreed upon by both the Owner and Contractor, in which case a Change Order is executed to supersede the Construction Change Directive.)

NOT VALID UNTIL SIGNED BY THE ENGINEER, CONTRACTOR AND OWNER.

ENGINEER	CONTRACTOR *(Firm name)*	OWNER *(Firm Name)*
C.L. Williams Con. Inc	Visus Engineering Construction, Inc.	Gila County
621 S. Hillside Ln	1831 N. Rochester Mesa, AZ 85205	745 N. Rose Mofford Way Globe, AZ. 85501
Address	Address	Address
BY *(Signature)*	BY (Signature)	BY (Signature)
Joseph M. Alwin	Jeffrey Allen	Steve Sanders
(Typed Name)	*(Typed Name)*	*(Typed Name)*
11/24/2012	11/21/12	11/27/12
Date	Date	Date

CHANGE ORDER DOCUMENT

CHANGE ORDER

PROJECT: Gila County	CHANGE ORDER NUMBER:	5	OWNER ☐
Russell Rd Reconstruction	DATE:	11/15/2012	ENGINEER ☐
	ENGINEER PROJECT NO.:	032712-1	CONTRACTOR ☐
TO CONTRACTOR:	CONTRACT DATE:	10/15/2012	FIELD ☐
Visus Engineering Construction, Inc.	CONTRACT FOR:	$720,000.00	OTHER ☐

The Contract is changed as follows:

Potholed/Located 4-inch Communication Conduit. Graded & Backfilled Gas Trench

This was completed on a Time and Material Basis.

The original (Contract Sum) was	$720,000
Net change by previously authorized Change Orders	$0
The (Contract Sum)prior to this Change Order was	$720,000
The (Contract Sum) will be (increased) (decreased) (**unchanged**) by this Change Order in the amount of	$1,865.93
The new (Contract Sum) including this Change Order will be	$720,000
The Contract Time will be (**increased**) decreased) (unchanged) by (0) days	
The date of Substantial Completion as of the date of this Change Order therefore is	February 17,2013

(NOTE: This Change Order does not include changes in the Construct Sum or Contract Time which have been authorized by Construction Change Directive until the cost and time have been agreed upon by both the Owner and Contractor, in which case a Change Order is executed to supersede the Construction Change Directive.)

NOT VALID UNTIL SIGNED BY THE ENGINEER, CONTRACTOR AND OWNER.

ENGINEER	CONTRACTOR *(Firm name)*	OWNER *(Firm Name)*
C.L. Williams Con. Inc.	Visus Engineering Construction, Inc	Gila County
621. S. Hillside Ln.	1831 N. Lockester Mesa Az 85205	745 N. Rose Mofford Way
Address	Address	Address Globe, AZ. 85501
BY *(Signature)*	BY (Signature)	BY (Signature)
JOSEPH M. ALWIN		Steve Sanders
(Typed Name)	*(Typed Name)*	*(Typed Name)*
11/24/2012	11/24/12	11/27/12
Date	Date	Date

CHANGE ORDER DOCUMENT

CHANGE ORDER

PROJECT: Gila County	CHANGE ORDER NUMBER:	6	OWNER ☐
Russell Rd Reconstruction	DATE:	12/14/2012	ENGINEER ☐
	ENGINEER PROJECT NO.:	032712-1	CONTRACTOR ☐
TO CONTRACTOR:	CONTRACT DATE:	10/15/2012	FIELD ☐
Visus Engineering Construction, Inc.	CONTRACT FOR:	$720,000.00	OTHER ☐

The Contract is changed as follows:

Remove existing concrete retaining wall located at the north end of Russell Road.

The original (Contract Sum) was	$720,000
Net change by previously authorized Change Orders	$0
The (Contract Sum)prior to this Change Order was	$720,000
The (Contract Sum) will be (increased) (decreased) (**unchanged**) by this Change Order in the amount of	$2,955.44
The new (Contract Sum) including this Change Order will be	$720,000
The Contract Time will be (increased) decreased) (**unchanged**) by (0) days	
The date of Substantial Completion as of the date of this Change Order therefore is	February 17,2013

(NOTE: This Change Order does not include changes in the Construct Sum or Contract Time which have been authorized by Construction Change Directive until the cost and time have been agreed upon by both the Owner and Contractor, in which case a Change Order is executed to supersede the Construction Change Directive.)

NOT VALID UNTIL SIGNED BY THE ENGINEER, CONTRACTOR AND OWNER.

ENGINEER	CONTRACTOR *(Firm name)*	OWNER *(Firm Name)*
C.L. Williams Cons	*Visus Engineering Construction, Inc.*	GILA COUNTY
621 S. Hillside Lane Pinetop AZ 85935	1831 N. Rochester Mesa, AZ 85205	745 N. Rose Mofford Way - Globe
Address	Address	Address
BY *(Signature)*	BY (Signature)	BY (Signature)
JOSEPH M. ALWIN	Jeffrey A. Kerr	STELE STRATTON
(Typed Name)	*(Typed Name)*	*(Typed Name)*
1/7/2013	12/19/12	1/30/2013
Date	Date	Date

CHANGE ORDER DOCUMENT

CHANGE ORDER

PROJECT: Gila County	CHANGE ORDER NUMBER:	7	OWNER ☐
Russell Rd Reconstruction	DATE:	12/14/2012	ENGINEER ☐
	ENGINEER PROJECT NO.:	032712-1	CONTRACTOR ☐
TO CONTRACTOR:	CONTRACT DATE:	10/15/2012	FIELD ☐
Visus Engineering Construction, Inc.	CONTRACT FOR:	$720,000.00	OTHER ☐

The Contract is changed as follows:

Install 1410 s.f. of 8" concrete reinforced slab on 4" cement treated bedding over the El Paso Natural Gas Line at approximately station 18 + 82. Cost is $15.70/s.f.

The original (Contract Sum) was	$720,000
Net change by previously authorized Change Orders	$0
The (Contract Sum)prior to this Change Order was	$720,000
The (Contract Sum) will be (increased) (decreased) (**unchanged**) by this Change Order in the amount of	$22,137.00
The new (Contract Sum) including this Change Order will be	$720,000
The Contract Time will be (**increased**) decreased) (unchanged) by (3) days	
The date of Substantial Completion as of the date of this Change Order therefore is	February 20,2013

(NOTE: This Change Order does not include changes in the Construct Sum or Contract Time which have been authorized by Construction Change Directive until the cost and time have been agreed upon by both the Owner and Contractor, in which case a Change Order is executed to supersede the Construction Change Directive.)

NOT VALID UNTIL SIGNED BY THE ENGINEER, CONTRACTOR AND OWNER.

ENGINEER	CONTRACTOR *(Firm name)*	OWNER *(Firm Name)*
C.L. Williams Cons.	*Visus Engineering Construction, Inc.*	GILA County
621 S. Hillside Lane Pinetop AZ 85935	1831 N. Rochester Mesa, AZ 85205	745 Rose Mofford Way Globe AZ 85501
Address	Address	Address
BY *(Signature)*	BY (Signature)	BY (Signature)
JOSEPH M. ALWIN	Jeffrey A. Kerr	STEVE STRATTON
(Typed Name)	*(Typed Name)*	*(Typed Name)*
1/7/2013	12/19/12	1/30/2013
Date	Date	Date

CHANGE ORDER DOCUMENT

CHANGE ORDER

PROJECT: Gila County	CHANGE ORDER NUMBER: 8		OWNER ☐
Russell Rd Reconstruction	DATE:	12/14/2012	ENGINEER ☐
	ENGINEER PROJECT NO.:	032712-1	CONTRACTOR ☐
TO CONTRACTOR:	CONTRACT DATE:	10/15/2012	FIELD ☐
Visus Engineering Construction, Inc.	CONTRACT FOR:	$720,000.00	OTHER ☐

The Contract is changed as follows:

Remove an unforeseen subsurface condition which included removal and backfilling of a cattle guard. Price of $7,715.00 was agreed per by all parties.

The original (Contract Sum) was	$720,000
Net change by previously authorized Change Orders	$0
The (Contract Sum)prior to this Change Order was	$720,000
The (Contract Sum) will be (increased) (decreased) (**unchanged**) by this Change Order in the amount of	$7,715.00
The new (Contract Sum) including this Change Order will be	$720,000
The Contract Time will be (**increased**) decreased) (unchanged) by (1) days	
The date of Substantial Completion as of the date of this Change Order therefore is	February 21,2013

(NOTE: This Change Order does not include changes in the Construct Sum or Contract Time which have been authorized by Construction Change Directive until the cost and time have been agreed upon by both the Owner and Contractor, in which case a Change Order is executed to supersede the Construction Change Directive.)

NOT VALID UNTIL SIGNED BY THE ENGINEER, CONTRACTOR AND OWNER.

ENGINEER	CONTRACTOR *(Firm name)*	OWNER *(Firm Name)*
C.L. Williams Cons.	*Visus Engineering Construction, Inc.*	GILA COUNTY
621 S. Hillside Ln 85935	1831 N. Rochester Mesa, AZ 85205	745 N. Rosemorford Way Globe AZ 85501
Address	Address	Address
BY *(Signature)*	BY (Signature)	BY (Signature)
JOSEPH M. ALWIN	Jeffrey A. Kerr	STEVE STRATTON
(Typed Name)	*(Typed Name)*	*(Typed Name)*
1/7/2013	12/19/12	1/30/2013
Date	Date	Date

CHANGE ORDER DOCUMENT

CHANGE ORDER

PROJECT: Gila County	CHANGE ORDER NUMBER:	9	OWNER ☐
Russell Rd Reconstruction	DATE:	2/5/2013	ENGINEER ☐
	ENGINEER PROJECT NO.:	032712-1	CONTRACTOR ☐
TO CONTRACTOR:	CONTRACT DATE:	10/15/2012	FIELD ☐
Visus Engineering Construction, Inc.	CONTRACT FOR:	$720,000.00	OTHER ☐

The Contract is changed as follows:

Relocate water services from edge of roadway cost of $3,132.00

*Balance to be forwarded to Change **Order # 10 ($2,967.86)***

The original (Contract Sum) was	$720,000
Net change by previously authorized Change Orders	$0
The (Contract Sum)prior to this Change Order was	$720,000
The (Contract Sum) will be (increased) (decreased) (unchanged) by this Change Order in the amount of	$164.14
The new (Contract Sum) including this Change Order will be	$720,000.00
The Contract Time will be (increased) decreased) (unchanged) by (0) days	
The date of Substantial Completion as of the date of this Change Order therefore is	February 21,2013

(NOTE: This Change Order does not include changes in the Construct Sum or Contract Time which have been authorized by Construction Change Directive until the cost and time have been agreed upon by both the Owner and Contractor, in which case a Change Order is executed to supersede the Construction Change Directive.)

NOT VALID UNTIL SIGNED BY THE ENGINEER, CONTRACTOR AND OWNER.

ENGINEER	CONTRACTOR (Firm name)	OWNER (Firm Name)
C.L. Williams Inc	Visus Engineering Construction, Inc.	Gila County
621 S. Hillside Ln Pinetop AZ 85935	1831 N. Rochester Mesa, AZ 85205	1400 E Ash Globe 85501
Address	Address	Address
BY (Signature)	BY (Signature)	BY (Signature)
JOSEPH M. ALWIN	Jeffrey A. Kerr	STEVE STRATTON
(Typed Name)	(Typed Name)	(Typed Name)
2/12/2013	2/11/13	2-12-13
Date	Date	Date

CHANGE ORDER DOCUMENT

CHANGE ORDER

PROJECT: Gila County	CHANGE ORDER NUMBER:	10	OWNER
Russell Rd Reconstruction	DATE:	2/11/2013	ENGINEER
	ENGINEER PROJECT NO.:	032712-1	CONTRACTOR
TO CONTRACTOR:	CONTRACT DATE:	10/15/2012	FIELD
Visus Engineering Construction, Inc.	CONTRACT FOR:	$720,000.00	OTHER

The Contract is changed as follows:

Balance forward from Change Order # 9 ($2,967.86)

Final adjusted quantity overruns/underruns per final pay application

The original (Contract Sum) was	$720,000
Net change by previously authorized Change Orders	$0
The (Contract Sum)prior to this Change Order was	$720,000
The (Contract Sum) will be (increased) (decreased)	
(unchanged) by this Change Order in the amount of	$46,157.86
The new (Contract Sum) including this Change Order will be	$766,157.86
The Contract Time will be (increased) decreased) (unchanged) by (0) days	
The date of Substantial Completion as of the date of this Change Order therefore is	February 21,2013

(NOTE: This Change Order does not include changes in the Construct Sum or Contract Time which have been authorized by Construction Change Directive until the cost and time have been agreed upon by both the Owner and Contractor, in which case a Change Order is executed to supersede the Construction Change Directive.)

NOT VALID UNTIL SIGNED BY THE ENGINEER, CONTRACTOR AND OWNER.

ENGINEER	CONTRACTOR (Firm name)	OWNER (Firm Name)
C.L. Williams Inc	Visus Engineering Construction, Inc.	Gila County
621 S. Hillside Ln	1831 N. Rochester Mesa, AZ 85205	1400 E Ash
Pinetop AZ 85935		Globe 85501
Address	Address	Address
BY (Signature)	BY (Signature)	BY (Signature)
JOSEPH M. ACUNA	Jeffrey A. Kerr	Steve Stratton
(Typed Name)	(Typed Name)	(Typed Name)
2/12/2013	2/11/13	2/12/13
Date	Date	Date

RUSSELL ROAD IMPROVEMENT PROJECT

ITEM 109- FORCE ACCOUNT WORK		Approved
Orginal Force Account Amount Available	$	75,000.00
Change Order # 1 New 4" PVC Fiber Optic Conduits	$	17,666.97
Change Order # 2 New Waterline Changes Requested by AZ Water Company	$	19,549.05
Change Order # 3 Lower 1" Gas Line to new depth - in conflict with new parking lot	$	1,243.79
Change Order # 4 Excavate & lower 4" communication conduit/ water service & relocate backflow prevention	$	1,702.68
Change Order # 5 Pothole/locate 4" communication conduit/grade/backfill gas trench	$	1,865.93
Change Order # 6 Demo retaining wall found during excavation	$	2,955.44
Change Order # 7 Install Concrete Cap over El Paso natural gas lines	$	22,137.00
Change Order # 8 Cattle Guard Removal	$	7,715.00
Change Order # 9 Partial relocate existing water lines(1) double service & (1) single connections	$	164.14
Subtotal of all Change Orders	**$**	**75,000.00**
TOTAL Force Account Allowed	**$**	**(75,000.00)**
added into COR #10 - balance of COR #9	**$**	**2,967.86**
Change Order #10 - Unit Costs Over and Under	**$**	**43,190.00**
	$	46,157.86

Russell Road Reconstruction Project

Change Order Documentation

Original Force Account Amount Available $75,000.00

Change Order # 1 $17,666.97

New 4" PVC Fiber Optic Conduits

This work was to trench and install 2-PVC conduits from the Facilities Building to the Roadyard Shop in order to hardware the communication lines. This was necessary due to existing wireless problems.

Change Order # 2 $19,549.05

New Waterline Changes Required by AZ Water Company

After the contract had been awarded the AZ Water Company Globe office determined that they had additional required changes to the project which included relocating blow-off valves and a separate air release valve. Also installed were 2 new 4-inch valves on the existing 4-inch water main.

Change Order # 3 $1,243.79

Lower 1" Gas Service which was in conflict with new parking lot.

The gas line was not identified during the design by the “blue stake” process.

Change Order # 4 $1,702.68

Excavate & lower the 4" communication conduit near the Facilities building and relocate a backflow prevention device on the Warbington property.

Order # 5 $1,865.93

Pothole and locate a 4" communication conduit and grade and backfill a gas trench.

The existing communication conduit near the Facilities building needed to be potholed and located in order to install the new line.

Change Order # 6 $2,955.44

Demolition of a retaining wall.

Demolition of an old reinforced concrete retaining wall in Russell Road right of way that was on the edge of the Project limits.

Change Order # 7 $22,137.00

Install Concrete Cap over El Paso Natural Gas lines.

There are 2 high pressure lines running under and perpendicular to the road. At the pre-construction meeting it was determined that the construction methods that the gas company would require for paving would not produce a quality product. Therefore a reinforced concrete cap was designed and approved by the gas company. This change order was needed to install that concrete cap.

Change Order # 8 $7,715.00

Cattle Guard Removal and over excavation due to unknown sub-surface conditions.

During the demolition of the Hope Lane intersection the contractor encountered an old buried cattle guard that had to be removed. Also an old channel braid from Water tank Wash was encountered and the sand had to be over excavated and replaced.

Change Order # 9 $164.14

Relocate 2 water services.

Relocate existing (1) double service & (1) single connections for the Long and Warbington properties. Partial of actual total $3,132 because balance of $2967.96 is above previous approved contract Force Account.

Subtotal of all Change Orders $75,000.00

Change Order #10 $46,157.86

Balance of COR#9 for water service relocation and unit price overrun and underruns

AMENDMENT NO. 1

The following amendments are hereby incorporated into the contract documents for the below stated project:

GILA COUNTY CONTRACT NO. 032712-1
RUSSELL ROAD RECONSTRUCTION PROJECT

VISUS ENGINEERING CONSTRUCTION

Effective September 18, 2012, Gila County and Visus Engineering Construction entered into a contract whereby Visus Engineering Construction agreed to provide all plant materials, labor, construction equipment and services required for performing all work for construction in Bid No. 032712-1 Russell Road Reconstruction Project, in Globe, Arizona.

The contract was issued for a unit price bid of $720,000. Amendment No. 1 is being issued to address the cost overruns which were not covered in the original scope of work in the amount of Forty-Six Thousand, One Hundred Fifty-Seven and 86/100's ($46,157.86). Consequently, the contract is amended to increase the unit bid by $46,157.86 to $766,157.86.

All other terms and conditions of the original agreement shall remain in full force and affect during the term of the contract.

IN WITNESS WHEREOF, two (2) identical counterparts of this amendment, each which shall include original signatures and for all purposes be deemed an original thereof, have been duly executed by the parties hereinabove named, on this _____ day of _____, 2013.

OWNER:

GILA COUNTY BOARD OF SUPERVISORS

_____
Michael A. Pastor, Chairman Board of Supervisors

CONTRACTOR

_____
Authorized Signature

_____
Print Name

ATTEST

_____
Marian Sheppard, Chief Deputy Clerk of the Board

APPROVED AS TO FORM:

_____
Bryan B. Chambers, Deputy Attorney Principal
for Bradley D. Beauchamp, County Attorney

GILA COUNTY ATTORNEY
Bradley D. Beauchamp

Re: County Attorney's Office "approval as to form" of contract or agreement.

To whom it may concern:

The County Attorney's Office has reviewed the contract or agreement attached to this agenda item and has determined that it is in its proper form and is within the powers and authority granted under the laws of this state to the public agency requesting the County Attorney's Office review.

Explanation of the Gila County Attorney's Office "Approval as to Form" Review

The Gila County Attorney's Office is often called upon to review contracts and other agreements between public entities represented by the County Attorney and private vendors, contractors, and individuals.

In performing this review, the County Attorney's Office reviews these contracts to see that they are in "proper form" prior to their execution. "Proper form" means that the contract conforms to fundamental contract law, conforms to specific legislative requirements, and is within the powers and authority granted to the public agency. It does not mean that the County Attorney's Office approves of or supports the policy objectives contained in the contract. That approval is solely the province of the public agency through its elected body.

The public agency or department submitting the contract for review has the responsibility to read and understand the contract in order to completely understand its obligations under the contract if it is ultimately approved by the public entity's board. This is because while the County Attorney's Office can approve the contract as to form, the office may not have any idea whether the public agency has the capacity to actually comply with its contractual obligations. Also, the County Attorney's Office does not monitor contract compliance. Hence the public entity or

submitting department will need to be prepared to monitor their own compliance. A thorough knowledge of the provisions of the contract will be necessary to monitor compliance.

Before signing a contract "approved as to form," the County Attorney's Office will answer any questions or concerns the public agency has about the contract. It is the responsibility of the public agency or department submitting the contract for review to ask any specific questions or address any concerns it has about the contract to the County Attorney's Office at the same time they submit the contract for review. Making such an inquiry also helps improve the County Attorney's Office review of the contract because it will help focus the review on specific issues that are of greatest concern to the public agency. Failing to make such an inquiry when the agency does have issues or concerns will decrease the ability of the County Attorney's Office to meaningfully review the agreement.

ARF-1674 **4- E**

Regular BOS Meeting

Meeting Date: 02/19/2013

Reporting Period: Recorder's Monthly Report for December 2012

Submitted For: Sadie Dalton

Submitted By: Sadie Dalton, Recorder, Recorder's Office

Information

Subject

Recorder's Monthly Report for December 2012

Suggested Motion

Approval of the December 2012 monthly activity report submitted by the Recorder's Office.

Attachments

Recorder's December 2012 Monthly Report

Received

JAN 25 2013

Gila County Treasurer

GILA COUNTY RECORDER

REPORT FOR THE MONTH OF DECEMBER 2012

I, Sadie Tomerlin, County Recorder in and for the County of Gila, State of Arizona hereby state and certify that the fees earned for this month are as set forth in the attached report.

Dawn M. Caldera

Sadie Tomerlin Dalton, Gila County Recorder

GILA COUNTY TREASURER'S RECEIPT
GILA COUNTY, ARIZONA

GILA COUNTY TREASURER
RECEIVED
105021 JAN 25 ω

DATE January 25, 2013

CONTRACT #

GRANT #

DEPOSIT TO FUND General fund FUND # 1005/105

REMITTING AGENCY Recorder (120)

BILLING PERIOD December 1 thru December 31, 2012

Account Code	Direct Deposit / Check #	Revenue Description	Amount	
1005-120-3400-99		Recorders fee's	12,091	33
7145-120-3400-99		Recorders Storage	5,032	00
7146-120-3400-99		County Mining fees	11	00
7147-120-3400-99		Computer Services	1,222	00
			$18,356	33

Preparer Signature: Jeri Bessmen Title Sr Recorder Clerk

Approved Signature: Dawn M Calderon Title Chief Deputy Recorder

SUMMARY OF DEPOSIT

Currency	
Coins	
Checks	18356 33
Total	18356 33

c/p

TREASURER By [signature] Date 1/25/13

TREASURER

120011

MONTHLY ACTIVITY REPORT - December 2012

	PAID	1005	7145	7146	7147	INTO SUSPENSE	OUT OF SUSPENSE	TOTAL FUNDS
12/3/12	7344.00	435.80	212.00	0.00	260.00	7302.00	563.80	907.80
12/4/12	163.00	252.00	128.00	0.00	0.00	152.00	217.00	380.00
12/5/12	200.00	385.00	180.00	0.00	0.00	187.00	365.00	565.00
12/6/12	539.50	817.50	360.00	0.00	0.00	211.00	638.00	1177.50
12/7/12	316.00	538.40	252.00	0.00	702.00	0.00	1176.40	1492.40
12/10/12	529.00	934.00	356.00	5.00	0.00	488.00	766.00	1295.00
12/11/12	164.00	361.00	172.00	0.00	0.00	560.00	369.00	533.00
12/12/12	171.00	517.00	280.00	5.00	0.00	292.00	631.00	802.00
12/13/12	229.00	503.00	204.00	0.00	0.00	266.00	478.00	707.00
12/14/12	188.00	360.00	140.00	0.00	0.00	317.00	312.00	500.00
12/17/12	514.00	685.00	352.00	0.00	0.00	152.00	523.00	1037.00
12/18/12	206.00	444.00	204.00	0.00	0.00	316.00	442.00	648.00
12/19/12	204.00	379.00	184.00	10.00	0.00	262.00	369.00	573.00
12/20/12	328.00	530.80	220.00	0.00	260.00	204.00	682.80	1010.80
12/21/12	330.00	722.00	316.00	10.00	0.00	0.00	718.00	1048.00
12/24/12	274.00	442.00	216.00	0.00	0.00	612.00	384.00	658.00
12/26/12	292.00	651.00	268.00	10.00	0.00	164.00	637.00	929.00
12/27/12	233.00	442.00	208.00	0.00	0.00	192.00	417.00	650.00
12/28/12	612.00	912.00	436.00	5.00	0.00	163.00	741.00	1353.00
12/31/12	518.00	745.00	344.00	10.00	0.00	276.00	581.00	1099.00
TOTAL	13354.50	11056.50	5032.00	55.00	1222.00	12116.00	11011.00	17365.50

Bank Deposit Summary, From 12/1/12 12:00 AM To 12/31/12 11:59 PM

Date & Time	Deposit Id	Bank Account	Reference	Amount
Dec 3, 2012 4:55:45 PM	2746	B	payson 12/3/12	$37.00
Dec 3, 2012 4:56:41 PM	2747	B	Globe	$7,307.00
Dec 4, 2012 4:53:26 PM	2748	B	Globe	$108.00
Dec 4, 2012 4:53:57 PM	2749	B	Payson 12/04/12	$55.00
Dec 5, 2012 4:54:55 PM	2750	B	Globe	$200.00
Dec 6, 2012 4:53:30 PM	2751	B	Globe	$445.50
Dec 7, 2012 8:00:58 AM	2755	B	Globe	$276.00
Dec 7, 2012 4:57:08 PM	2753	B	Payson 12/07/12	$40.00
Dec 7, 2012 5:01:23 PM	2754	B	12/06/12 corrected	$94.00
Dec 10, 2012 8:00:28 AM	2757	B	Globe	$463.00
Dec 10, 2012 4:57:12 PM	2756	B	12/10/12	$66.00
Dec 11, 2012 10:35:19 AM	2760	B	Globe	$140.00
Dec 11, 2012 4:58:15 PM	2758	B	12/11/12 Payson	$24.00
Dec 12, 2012 4:55:44 PM	2761	B	Globe	$93.00
Dec 12, 2012 5:00:20 PM	2762	B	12/12/12 Payson	$78.00
Dec 13, 2012 4:53:21 PM	2763	B	Globe	$194.00
Dec 13, 2012 4:55:16 PM	2764	B	12/13/12 Payson	$35.00
Dec 14, 2012 4:54:52 PM	2765	B	Globe	$167.00
Dec 14, 2012 4:55:13 PM	2766	B	12/14/12 Payson	$21.00
Dec 17, 2012 4:53:42 PM	2767	B	Globe	$493.00
Dec 17, 2012 4:59:20 PM	2768	B	12/17/12 Payson	$21.00
Dec 18, 2012 4:54:32 PM	2769	B	Globe	$206.00
Dec 18, 2012 4:55:10 PM	2770	B	12/18/12 Payson	$0.00
Dec 19, 2012 8:17:51 AM	2772	B	globe	$152.00
Dec 19, 2012 4:56:54 PM	2771	B	12/19/12 Payson	$52.00
Dec 20, 2012 4:53:08 PM	2773	B	Globe	$279.00
Dec 20, 2012 5:02:07 PM	2774	B	12/20/12 Payson	$49.00
Dec 21, 2012 4:54:26 PM	2775	B	globe	$248.00
Dec 21, 2012 5:11:44 PM	2776	B	12/21/12 Payson	$82.00
Dec 24, 2012 4:52:13 PM	2777	B	payson 12/24/12	$0.00
Dec 24, 2012 4:53:59 PM	2778	B	Globe	$274.00
Dec 26, 2012 4:59:43 PM	2779	B	12/16/12 payson	$78.00
Dec 26, 2012 4:59:51 PM	2780	B	Globe	$214.00
Dec 27, 2012 5:00:59 PM	2782	B	Globe	$177.00
Dec 28, 2012 12:59:42 PM	2783	B	12/27/12 corrected Payson	$56.00
Dec 28, 2012 4:54:19 PM	2784	B	Globe	$534.00
Dec 28, 2012 5:04:15 PM	2785	B	12/28/12 Payson	$78.00
Dec 31, 2012 4:56:57 PM	2786	B	12/31/12 Payson	$12.00
			Total	$12,848.50

Deposit 12/31/12 506.00
Deposited 1/2/13 $13354.50

Journal Activity

Account		Debits	Credits	Net
Asset				
1005SuspensePrePayAccounts	1005 Suspense - Prepay	$5,819.00	($7,000.00)	($1,181.00)
Cash	Cash/Check	$13,354.50	$0.00	$13,354.50
D-1005-120-01-4612-003	Postage(deferred)	$10.00	($13.00)	($3.00)
D-1005-120-01-4612-023	Recording Fee (deferred)	$30.00	($42.00)	($12.00)
D-7145-120-01-4775-004	Recorder Storage and Retrieval (deferred)	$40.00	($52.00)	($12.00)
ETransfer	Electronic Transfers	$5,116.00	$0.00	$5,116.00
	Total	**$24,369.50**	**($7,107.00)**	**$17,262.50**
Liability				
1005SuspenseChargeAccounts	1005 Suspense - Charge	$107.00	($80.00)	$27.00
	Total	**$107.00**	**($80.00)**	**$27.00**
Expense				
	Total	**$0.00**	**$0.00**	**$0.00**
Revenue				
1005-120-01-4612-001	Copies	$0.00	($332.00)	($332.00)
1005-120-01-4612-002	Certified Seal	$0.00	($45.00)	($45.00)
1005-120-01-4612-003	Postage	$0.00	($871.00)	($871.00)
1005-120-01-4612-005	Affidavit of Property Value	$0.00	($340.00)	($340.00)
1005-120-01-4612-008	Additional Transaction Fee	$0.00	($102.00)	($102.00)
1005-120-01-4612-012	Overpayment	$0.00	($112.00)	($112.00)
1005-120-01-4612-018	Misc Fees (Notification)	$0.00	($171.00)	($171.00)
1005-120-01-4612-023	Recording Fee	$0.00	($8,951.50)	($8,951.50)
1005-120-01-4612-026	Refunds	$0.00	($52.00)	($52.00)
1005-120-01-4612-027	Fax	$0.00	($55.00)	($55.00)
1005-120-01-4612-029	Search	$0.00	($10.00)	($10.00)
7145-120-01-4775-004	Recorder Storage and Retrieval	$0.00	($5,020.00)	($5,020.00)
7146-120-01-4612	Mining Fees	$0.00	($11.00)	($11.00)
7146-120-01-4776-009	State Mining Fees	$0.00	($44.00)	($44.00)
7147-120-01-4774-031	Miscellaneous	$0.00	($1,222.00)	($1,222.00)
eRecording	eRecording	$5,085.00	($5,036.00)	$49.00
	Total	**$5,085.00**	**($22,374.50)**	**($17,289.50)**
	Total	**$29,561.50**	**($29,561.50)**	**$0.00**

Range Summary

Range	Account	Debits	Credits	Net
Cash/Check				
	Cash Cash/Check	$13,354.50	$0.00	$13,354.50
	Range Total	**$13,354.50**	**$0.00**	**$13,354.50**

Sadie Tomerlin
Gila County Recorder

New Fiscal Year Form

Month	FY No of Doc.	2012-2013 Recorder Storage & Retrieval 7145	Recording Fees 1005	Computer Svcs 7147	Mining fees 7146	Recorder Check to Treasurer
July	1,169	4,532	14,548.76	948.93	6.00	20,035.69
Aug	1,521	5,724	21,082.47	920.32	28.00	27,754.79
Sept	1,346	5,180	10,507.62	952.20	11.00	16,650.82
Oct	1,378	5,140	16,655.49	1,286.00	2.00	23,083.49
Nov	1,177	4,432	5,751.16	775.30	2.00	10,960.46
Dec	1,342	5,032	12,091.33	1,222.00	11.00	18,356.33
Jan						0.00
Feb						0.00
Mar						0.00
Apr						0.00
May						0.00
June						0.00
Total	7,933	30,040	80,636.83	6,104.75	60.00	116,841.58
Fiscal Year All Monies		116,841.58				

	A	B	C	D	E	F
1		GILA COUNTY RECORDER				
2						
3		REPORT FOR	Decmeber 2012			
4						
5	SECTION I		CREDIT	DEBIT	TOTAL	EXPLANATION
6	1005 (GENERAL FUND)	PAID INTO SUSPENSE ACCT	$12,116.00		$0.00	
7		PAID OUT OF SUSPENSE ACCT		$11,011.00	$1,105.00	
8		RECORDING FEES	$11,056.50	$0.00	$0.00	
9		REFUNDS-EXCESS FEES	$0.00	$52.00		
10		NSF Check		$32.00		
11		Bank Fee		$12.00		
12		Collections	$57.00			
13		INTEREST PD TO ACCT	$0.83	$0.00		
14		IRS PAYMENT FROM 11/2012		$32.00		
15	TOTAL 1005 FUNDS		$23,230.33	$11,139.00	$12,091.33	
16						
17	SECTION II					
18		7145 FUND (RECORDER)	$5,032.00	$0.00	$5,032.00	
19		7146 FUND (MINING - 80% STATE TREAS)	$44.00	$44.00	$44.00	
20		7146 FUND (MINING - 20% RECORDER)	$11.00	$0.00	$11.00	
21		7147 FUND (COMPUTER SVCS)	$1,222.00	$0.00	$1,222.00	
22	TOTAL SEC II FUNDS		$6,309.00	$44.00	$6,309.00	
23						
24	COMBINED TOTALS - TOTAL FEES COLLECTED		$29,539.33	$11,183.00	$18,356.33	
25						
26						

House Account Summary

Gila County AZ Recorder

For the Period of 12/01/2012 - 12/31/2012

Immediate and Deferred Accounts

House Account ID	House Account Name	Starting Balance	Charges	Payments	Ending Balance
ACCU	ACCUSEARCH	($154.00)	$0.00	$0.00	($154.00)
ADOR-M	STATE OF ARIZONA - DEPT OF REVENUE	($456.57)	$46.80	$0.00	($409.77)
ADOT	AZ DEPT OF TRANS	($295.50)	$0.00	$0.00	($295.50)
APS	APS/COPIES	($185.00)	$0.00	$0.00	($185.00)
APSR	APS/RECORDINGS	($129.00)	$30.00	$0.00	($99.00)
ARARS	AZ RESEARCH &AMP RETRIEVAL SVCS	($195.00)	$14.00	$0.00	($181.00)
AWC	ARIZONA WATER COMPANY	($242.00)	$0.00	$0.00	($242.00)
AZDOR	ADOR ACCOUNTS PAYABLE	($2,070.00)	$0.00	$0.00	($2,070.00)
AZRE/RECORDING	ARIZONA DEPT OF REALESTATE	($2,050.00)	$0.00	$0.00	($2,050.00)
CARD	Cardon Hiatt / The Vineyrd Group	($105.00)	$0.00	$0.00	($105.00)
EQUIT	EQUITY SERVICES	($80.00)	$0.00	$0.00	($80.00)
ERAY	ERA YOUNG REALTY	($197.40)	$46.80	$0.00	($150.60)
EXCEL	EXCEL DOCUMENT SERVICES	($49.00)	$0.00	$0.00	($49.00)
FARES	First American Corelogic Inc.	($436.40)	$285.00	$0.00	($151.40)
FATM	FIRST AMERICAN MICROFICHE	($2,269.60)	$335.40	$0.00	($1,934.20)
FB	FLOYD BLEAK / NANCY SHEPPARD	($584.00)	$0.00	$0.00	($584.00)
FCS.INC	Pacific Corportate & Title Service	($51.00)	$0.00	$0.00	($51.00)
FNDS	LPS APPLIED ANALYTICS	($873.20)	$285.00	$0.00	($588.20)
GCCD	GILA COUNTY COMMUNITY DEVELOPMENT	$83.50	$19.00	$0.00	$102.50
HANSEN-ENGINEERING	HANSEN ENGINEERING & SURVEYING	($43.00)	$0.00	$0.00	($43.00)
IMAPP	IMAPP , INC	($53.40)	$0.00	$0.00	($53.40)
INDEPTH	INDEPTH SOLUTIONS INC	($113.00)	$13.00	$0.00	($100.00)
Ingeo	Ingeo - eRecording	($507.00)	$811.00	($829.00)	($525.00)
IRS	INTERNAL REVENUE SERVICE	($82.00)	$88.00	($80.00)	($74.00)
LA001	First American Title Lenders Advantage	($428.50)	$0.00	$0.00	($428.50)
MHK	MORRIS HALL KINGHORN	($266.00)	$0.00	$0.00	($266.00)
NDTS-TSG	FIRST AMERICAN TITLE INSURANCE COMPANY	($886.00)	$0.00	$0.00	($886.00)
NewAcct1	Applied Technology Resources Inc	($100.00)	$0.00	$0.00	($100.00)
PIONE	PIONEER TITLE AGENCY FICHE	($470.00)	$257.00	$0.00	($213.00)
PTP2	PIONEER TITLE AGENCY RECORDINGS 2	($620.00)	$4,456.00	($7,000.00)	($3,164.00)
RSSI	RECORD SEARCHING SERVICES INC	($119.00)	$50.00	$0.00	($69.00)
simplifile	Simplifile - eRecording	($835.00)	$4,274.00	($4,207.00)	($768.00)
SOUTHWES DIV	FIRST AMERICAN TITLE	($1,159.20)	$0.00	$0.00	($1,159.20)
Totals		**($16,021.27)**	**$11,011.00**	**($12,116.00)**	**($17,126.27)**

-32 Shows in Plus

ARF-1683 **4- F**

Regular BOS Meeting

Meeting Date: 02/19/2013

Reporting Period: Globe Regional Justice Court's Monthly Report for January 2013

Submitted For: Mary Navarro

Submitted By: Mary Navarro, Justice Court Operations Mgr, Superior Court

---

Information

Subject

Globe Regional Justice Court's Monthly Report for January 2013

Suggested Motion

Approval of the January 2013 month departmental activity report submitted by the Globe Regional Justice Court

---

Attachments

Globe Regional Justice Court's Monthly Report for January 2012

GLOBE JUSTICE COURT TREASURER'S RECAP FY2013

JANUARY, 2013 FUND NAME	AZTEC CODE	ACCOUNT CODE	ACCOUNT CODE	TOTAL AMOUNT ALLOCATED	5% FILL THE GAP SET ASIDE	ADJUSTED BALANCE
Bulk Merchandise Civil Penalty	ZBULK		STATE	$ -	$ -	$ -
Child Passenger Restraint	ZCPRF		STATE	$ 69.04	$ 3.46	$ 65.58
Drug and Gang Enforcement Fines	ZDECJ		STATE	$ 699.17	$ 34.96	$ 664.21
Domestic Violence Shelter Fund	ZDVSF		STATE	$ -	$ -	$ -
FARE Special Collection Fee 19%	ZFAR1		STATE	$ 4,790.11		$ 4,790.11
FARE Delinquency Fee $35.00	ZFAR2		STATE	$ 2,385.73		$ 2,385.73
Game and Fish - Wildlife	ZGF		STATE	$ -	$ -	$ -
Extra DUI Assessment $500	ZGFDU		STATE	$ 4,415.01	$ 220.76	$ 4,194.25
HURF 1 28-5438, 2533C	ZHRF1		STATE	$ 26.50	$ 1.33	$ 25.17
HURF 3 28-5433C, 4139	ZHRF3		STATE	$ 240.00	$ 12.00	$ 228.00
HURF - to DPS	ZHRFD		STATE	$ 60.00	$ 3.00	$ 57.00
Registrar of Contractors	ZRCA		STATE	$ -	$ -	$ -
Display Suspended Plates (DPS)	ZSLPD		STATE	$ 6.85	$ 0.35	$ 6.50
State Photo Enforcement Base Fine	ZSPBF		STATE	$ -	$ -	$ -
State Photo Enforcement Clean Election Surcharge	ZSPCE		STATE	$ -	$ -	$ -
Public Safety Equipment Fund	ZPSEF		STATE	$ 1,000.00	$ 50.00	$ 950.00
Alternative Dispute Resolution	ZADR		T848-2061	$ 47.62	$ 2.39	$ 45.23
Arson Detection Reward Fund 41-2167D	ZADRF		T901-2061	$ -	$ -	$ -
Confidential Address Assessment - State Treasurer	ZCAA1	1005.311.3360.85		$ -	$ -	$ -
Confidential Address Assessment - Local	ZCAA2	1005.311.3800.30		$ -	$ -	$ -
Citizens Clean Elections	ZCEF		T888-2061	$ 1,656.93		$ 1,656.93
Criminal Justice Enhancement 67%	ZCJEF		T812-2061	$ 8,011.37	$ 400.57	$ 7,610.80
Defensive Driving Diversion Fee	ZDDS	1005.311-3510.10	X105-4831	$ 700.00	$ 35.00	$ 665.00
DNA State Surcharge 3% 12-116.01C	ZDNAS		T872-2061	$ 935.28	$ 46.77	$ 888.51
DUI Abatement	ZDUIA		T889-2061	$ 340.00	$ 17.00	$ 323.00
Elected Officials Retirement Fund 15.30%	ZEORF		T801-2061	$ 355.95	$ 17.80	$ 338.15
Extra Adult Probation Assessment	ZEXAP	4042.335-3405.30	X25001335-4835	$ 60.78	$ 3.04	$ 57.74
Base Fees (General Fund)	ZFEE	1005.311-3400.15	X105-4615	$ 800.88	$ 40.05	$ 760.83
Forensic Investigation Fund	ZFIF			$ -	$ -	$ -
Base Fines (General Fund)	ZFINE	1005.311-3510.10	X105-4831	$ 15,805.52	$ 790.28	$ 15,015.24
Fill the Gap Surcharge 7%	ZFTGS		T870-2061	$ 1,159.74	$ 57.99	$ 1,101.75
Failure To Pay Warrant Surcharge 10%	ZFTPS	1005.311.3400.17	X10501311-4861	$ 1,140.42	$ 57.03	$ 1,083.39
HURF - to Sheriff's Office 28-5533G	ZHRFS	1005.300-3400.15	X1050234-4615	$ -	$ -	$ -
Judicial Collection Enhancement $7	ZJCL	4740.311-3400.15	X357-4615	$ 834.57		$ 834.57
Judicial Collection Enhancement Local %	ZJCLF	1005.311-3400.15	X105-4615	$ 158.41	$ 7.93	$ 150.48
Judicial Collection Enhancement $13	ZJCS		T840-2061	$ 1,548.78		$ 1,548.78
Judicial Collection Enhancement %PC	ZJCSF		T840-2061	$ 362.74	$ 18.14	$ 344.60
Jail (Incarceration) Fees	ZJF	1005.300-3405.40	X10502442-4651	$ 2,172.62		$ 2,172.62
Local Costs	ZLCL1-5	1005.311-3400.10	X105-4450	$ 174.96	$ 8.75	$ 166.21
Cost of Prosecution Reimbursement 60%	ZLCL6	3544.301-3400.11	X182-4620	$ 204.97		$ 204.97
Cost of Prosecution Reimbursement 40%	ZLCL6	4574.333-3400.16	X22601333-4864	$ 136.64		$ 136.64
County Attorney Bad Check Program	ZLCL7	3545.301-3400.11	X183-4620	$ 425.00	$ 21.25	$ 403.75
Miscellaneous Fees - Local	ZMISC	1005.311-3400.15	X105-4615	$ 601.90	$ 30.10	$ 571.80
Medical Services Enhancement 13%	ZMSEF		T813-2061	$ 2,215.98	$ 110.80	$ 2,105.18
2011 Additional Assessment - State Treasurer	ZOS1		T930-2061	$ 1,890.59	$ 94.53	$ 1,796.06
2011 Additional Assessment - County Treasurer	ZOS2		T931-2061	$ 236.35	$ 11.82	$ 224.53
Officer Safety Equipment - City Police - Globe (CP)	ZOS3		T932-2061	$ 73.87	$ 3.70	$ 70.17
Officer Safety Equipment - Sheriff (SHF)	ZOS4		T933-2061	$ 39.60	$ 1.98	$ 37.62
Officer Safety Equipment - DPS (DPS)	ZOS5		T934-2061	$ 812.45	$ 40.63	$ 771.82
Officer Safety Equipment - MVD/ADOT (MVD)	ZOS6		T935-2061	$ 2.57	$ 0.13	$ 2.44
Officer Safety Equipment - Game and Fish (GF)	ZOS7		T936-2061	$ -	$ -	$ -
Officer Safety - Registrar of Contractors (ROFC)	ZOS8		T937-2061	$ -	$ -	$ -
Officer Safety Equipment - Globe Fire (FD)	ZOS13		T938-2061	$ -	$ -	$ -
Arizona Department of Insurance (ADOI)	ZOS15		T939-2061	$ -	$ -	$ -
Officer Safety Equipment - Miami Police Dept. (MPD)	ZOS16		T940-2061	$ 10.36	$ 0.52	$ 9.84
Health and Human Services (HHS)	ZOS17		T941-2061	$ -	$ -	$ -
Gila County Animal Control (R)	ZOS18		T942-2061	$ 0.30	$ 0.02	$ 0.28
Officer Safety - San Carlos Tribal Police (SCPD)	ZOS19		T943-2061	$ 6.06	$ 0.31	$ 5.75
TriCity Fire Department (TRIFI)	ZOS20		T944-2061	$ -	$ -	$ -
San Carlos Game and Fish (SCGF)	ZOS23		T945-2061	$ -	$ -	$ -
Officer Safety Equip. - Hayden Police Dept. (HPD)	ZOS24		T946-2061	$ -	$ -	$ -
Arizona Department of Liquor (ADL)	ZOS25		T947-2061	$ -	$ -	$ -
Overpayment Forfeited	ZOVF	1005.311.3510.10	X105-4831	$ 32.52	$ 1.63	$ 30.89
Adult Probation Fee	ZPBA	4042.335-3405.30	X25001335-4835	$ 254.13	$ 12.71	$ 241.42
Prison Construction Fund	ZPCOF		T908-2061	$ 6,073.55	$ 303.68	$ 5,769.87
Probation Surcharge 2006 ($10.00)	ZPRS6		T871-2061	$ 143.46	$ 7.17	$ 136.29
Probation Surcharge 2009 ($20.00)	ZPRS9		T871-2061	$ 5,046.70	$ 252.34	$ 4,794.36
Probation Surcharge $5.00	ZPRSU		T871-2061	$ 80.94	$ 4.05	$ 76.89
Public Defender Fees	ZPUBZ	1005.345-3300.00	X105-4429	$ 167.31		$ 167.31
Reimbursement to County Attorney 60%	ZREIM	3544.301.3400.11	X182-4620	$ 2,972.12		$ 2,972.12
Reimbursement to County Attorney 40%	ZREIM	4574.333.3400.16	X22601333-4864	$ 1,981.41		$ 1,981.41
Security Enhancement Fee	ZSECE			$ -	$ -	$ -
State Highway Fund	ZSHWY			$ -	$ -	$ -
State Highway Work Zone Fund	ZSHWZ		T855-2061	$ -	$ -	$ -

GLOBE JUSTICE COURT TREASURER'S RECAP FY2013

JANUARY, 2013 FUND NAME	AZTEC CODE	ACCOUNT CODE	ACCOUNT CODE	TOTAL AMOUNT ALLOCATED	5% FILL THE GAP SET ASIDE	ADJUSTED BALANCE
Display Suspended Plates (Sheriff's Office)	ZSLPS	1005.300-3510.10	X105-4264	$ -	$ -	$ -
Technical Registration Fund ($15 Drug Offenses)	ZTECH			$ -	$ -	$ -
Victims Assistance Fund	ZVAF		T814-2061	$ -	$ -	$ -
Local Warrant Fee	ZWAR			$ -	$ -	$ -
DARE - Sheriff's Office	ZDASO		SHERIFF D.A.R.E	$ 39.80	$ 1.99	$ 37.81
HURF - to City Police	ZHRFC		CITY POLICE	$ -	$ -	$ -
Display Suspended Plates (City Police)	ZSLPC		CITY POLICE	$ -	$ -	$ -
TOTALS				$ 73,407.56	$ 2,727.96	$ 70,679.60
				TOTAL ADJUSTED BALANCE VERIFICATION		$ 70,679.60
				TOTAL RESTITUTION RECEIVED		$ 3,232.64
				TOTAL RECEIPTS THIS MONTH		$ 76,640.20

DATE	CHECK NO.	AMOUNT	MONTHLY REMITTANCE TO:
2/1/2013	7087	$ 13,366.55	ARIZONA STATE TREASURER
2/1/2013	7088	$ 60,003.20	GILA COUNTY TREASURER
2/1/2013	7089	$ 37.81	GILA COUNTY SHERIFF D.A.R.E.
		$ -	CITY POLICE SUSPENDED PLATES
		$ 73,407.56	TOTAL DISTRIBUTIONS THIS MONTH

I, Gary Gpetteman, Justice of the Peace for the Globe Regional Justice Court, do hereby certify that the foregoing is a true and correct account of funds, to the best of my knowledge and belief, collected by me for the month of JANUARY, 2013.

Justice of the Peace

Subscribed and Sworn to before me this 4th day of February, 2013.

Notary Public

My Commission Expires: 12-12-2015

MARY E. MENDEZ
Notary Public - State of Arizona
GILA COUNTY
My Commission Expires
December 12, 2016

GLOBE REGIONAL JUSTICE COURT
MONTHLY TRUST REPORT

For the Month of: January, 2013

BONDS

BALANCE AT THE BEGINNING OF THE MONTH	**$ 5,348.65**
RECEIVED DURING THE MONTH	**$ 9,305.52**
DISBURSED DURING THE MONTH	**$10,789.32**
BALANCE AT THE END OF THE MONTH	**$ 3,864.85**

Justice of the Peace

Susan L. Williams

Court Manager/Financial Clerk

*Auditor General: Monthly trust report-summarize the courts bond and deposit transactions - although bond and deposit monies remain in the court bonds account, it must be included in financial reports – the report must be filed with the county disbursement and it must indicate beginning balances, deposits, withdrawals and balances due.

ARF-1685 **4- G**

Regular BOS Meeting

Meeting Date: 02/19/2013

Reporting Period: Payson Regional Constable's Monthly Report for January 2013

Submitted For: Colt White

Submitted By: Michelle Keegan, Administrative Clerk Senior, Constable - Payson

---

Information

Subject

Payson Regional Constable's Monthly Report for January 2013

Suggested Motion

Approval of the January 2013 monthly activity report submitted by the Payson Regional Constable's Office

---

Attachments

Payson Regional Constable's Office Monthly Report for January 2013

David Vaughn
Deputy Constable

Michelle Keegan
Clerk of the Constable

Office of
Payson Regional Constable
Colt White

January 2013
MONTHLY REPORT

TABLE OF CONTENTS

MONTHLY ACTIVITY LETTER

MONTHLY COMPARISON SHEET

FEES COLLECTED

SERVICE SUMMARY REPORT

LOG OF FEES

LOG OF NON-FEES

MILEAGE CHART

TREASURER'S RECEIPT

108 WEST MAIN STREET, PAYSON, AZ 85541 – PHONE: (928) 474-3844/FAX: (928) 468-1509

David Vaughn
Deputy Constable

Michelle Keegan
Clerk of the Constable

Office of
Payson Regional Constable
Colt White

February 1, 2013

Gila County Board of Supervisors
Gila County Courthouse
1400 East Ash Street
Globe, Arizona 85501

PAYSON REGIONAL CONSTABLE'S OFFICE MONTHLY ACTIVITY LETTER

For the month of **January, 2013**, the Payson Regional Constable's Office:

- Received a total of **152** papers for service
- Drove a total of **1,821** miles
- Collected a total of **$1,220.20** as follows:

• Check Total	$606.20
• Cash Total	$614.00
• Total Deposited	$1,220.20
• Less Writ Fee (2 @ $5.00/each) Collected (Check #2313/Treasurer's Receipt #98356)	($ 10.00)
• Paid to General Fund (Check #2314/Treasurer's Receipt #98357)	$1,210.20
• Additional funds from the Town of Payson paid into General Fund for process serving by the Payson Constable	$ 875.00
Grand Total Paid to General Fund	**$2,085.20**

Respectfully submitted,

Colt White
Payson Regional Constable
Gila County, Payson, Arizona

David Vaughn
Deputy Constable

Michelle Keegan
Clerk of the Constable

Office of
Payson Regional Constable
Colt White

PAYSON REGIONAL CONSTABLE'S OFFICE STATISTICS
MONTHLY TOTALS FOR FISCAL YEAR 2012-2013

2012-2013 MONTH	TOTAL PAPERS	MILES DRIVEN	FEES COLLECTED	CONTRACT INCOME	ADJUSTED TOTAL
JULY	136	1,765	$1,721.60	$875.00	$2,596.60
AUGUST	124	2,046	$1,634.65	$875.00	$2,509.65
SEPTEMBER	161	1,984	$1,735.30	$875.00	$2,610.30
OCTOBER	164	1,629	$1,316.00	$875.00	$2,191.00
NOVEMBER	110	1,867	$2,046.40	$875.00	$2,921.40
DECEMBER	112	1,985	$1,218.60	$875.00	$2,093.60
JANUARY	152	1,821	$1,220.20	$875.00	$2,095.20
FEBRUARY					
MARCH					
APRIL					
MAY					
JUNE					
YEAR TOTAL:	959	13,097	$10,892.75	$6,125.00	$17,017.75

108 WEST MAIN STREET, PAYSON, AZ 85541 – PHONE: (928) 474-3844/FAX: (928) 468-1509

CHECK AND CASH RECEIVED FOR MONTH				JANUARY	2013
DATE	CHECK# / RECEIPT#	AMOUNT	CASE #	PLAINTIFF	DEFENDANT
1/2/2013	485003/8336	$40.00	2012CV00321	Discover Bank (JJL Process Corp)	Charlotte Hulet & John/Jane Doe Hulet (if married)
1/2/2013	485004	$56.00	DO201200140	Jake Dean Lamons	Carylynn C Spencer
1/14/2013	485005	$40.00	2013CV000027	Carole Hargrove	Mikayla Mendoza
1/14/2013	485006	$40.00	2013CV000028	Carole Hargrove	Kayla Warren
1/14/2013	485007/8983	$20.00	2012CV792	Capital One Bank (JJL Process Corp)	Suella L Minniss John/Jane Doe Minniss (if married)
1/14/2013	485008/7396	$91.20	CC2012-239614	Royal Ranch Homeowners Association (Get Smart Process Service)	Michael Grim and Jennifer Grim
1/14/2013	485011/9928	$61.00	201108087	Zions Bank, a National Banking Association, c/o Robert S Porter, Esq.	Paul R Archer and Holly M Archer, husband and wife
1/15/2013	485009/1223	$32.00	CV2011-00424	Canyon State Credit Union (Phoenix Professional Services)	Casey Bennett and Heather Bennett
1/16/2013	485010	$40.00	2013CV000031	Flor Vazquez	Iris Alexandra Gonzalez-Felix
1/17/2013	485012	$80.00	2012CV651-SC & 2013CV23-SC	PJ Rental Properties LLC, Paul Bates and Joy Richards	Dave Burdick & Tiffany McDaniel
1/17/2013	485013	$40.00	2013CV000039	Kathleen (Kathy) Bickert	Stephen Fenton
1/18/2013	485014	void	void	void	void
1/22/2013	485015	$60.00	DO2011-00356	James A McCaw	Sharon L. McCaw
1/22/2013	485016	$40.00	2013CV000029	Karen Dinovo	J R Pfundheller
1/23/2013	485017	$40.00	2013CV000051	Timothy Lewis Hines	AJ Jordan
1/24/2013	485018	$40.00	2013CV34-IH	Joseph Armstrong	Leticia Alatriz
1/24/2013	485019/7423	$64.00	CC2013-002767RC	Ashton Ranch Community Homeowners Association, Inc., an Arizona non-profit corporation (Get Smart Process Svc)	Luigi DiFabio and Luciana DiFabio, husband and wife
1/24/2013	485020/11115	$56.00	DO2007-0388	Brandi Lynne Morris (Clark Family Law PC)	Jerry Michael Morris
1/25/2013	485021	$40.00	DO2005-373	Deborah Rose-Ellis	Glen Owen Ellis
1/28/2013	485022/32694	$60.00	CC2012085181SC	Cactus Park Community Association, Inc	Robert J & Carolyn A Fenwick
1/29/2013	485023/5057	$46.00	2013CV58-FD	Ponderosa Glen MHP, Roy Haught	Timothy Mitchell
1/29/2013	485024/2046	$56.00	2012CV897-OV	Law Offices of Jo Ellen Vork	Carol Jolene Schaff
1/29/2013	485025	$46.00	2013CV60FD	Green Valley Apartments c/o Rick Croy	Marek Szcygiel
1/29/2013	485026	$46.00	2013CV61FD	Green Valley Apartments c/o Rick Croy	Donna Cleary
1/31/2013	485027	$40.00	2013CV66-SC	Lisa Faircloth	Greg Jones, Montezuma Hay Sales
1/31/2013	485028	$46.00	2013CV73FD	William Epley	Daniel & Tiffany Woodward

	Total deposit for January 2013	$1,220.20			
	Writ Fees Collected for January 2013 2/1/2013 ck#2313	$10.00			
	Adjusted Service Fees Collected for January 2013 2/1/2013 ck#2314	$1,210.20			

PAYSON REGIONAL CONSTABLE

Colt White
108 West Main Street Payson, Arizona 85541

Payson Regional Constable's Office,
Payson Regional
(928) 474-3844

GENERAL CERTIFICATE of SERVICE
SERVICE SUMMARY REPORT - by DATE SERVED

1/1/2013 TO 1/31/2013

Number of Cases	Description
1	Injunction Against Harassment (Fee Waived By Ct) (Fee)
7	Injunction Against Harassment (Fee)
1	Motion (Fee)
3	Notice & Summons (Fee)
1	Order To Appear; Petition For Modification Of Child Support, Visitation (Fee)
1	Petition To Modify Child Custody, Parenting Time & Child Support (Fee)
1	Subpoena (Fee)
5	Summons & Complaint (Fee)
1	Summons & Complaint; Certificate Of Compulsory Arbitration (Fee)
4	Summons & Complaint-Forcible Detainer (Fee)
1	Writ Of Garnishment (Earnings) & Summons (Fee)
1	WRIT OF GARNISHMENT (Fee)
2	Notice Of Continuance Of Hearing
14	Notice To Appear; Petition
1	Order For Telephonic Deposition

GENERAL CERTIFICATE of SERVICE

SERVICE SUMMARY REPORT - by DATE SERVED

1/1/2013 TO 1/31/2013

Number of Cases	Description
10	Order Of Protection
3	Order To Appear
1	Order To Show Cause
75	Subpoena
1	Summons
18	Summons & Complaint

Total Number of Fee Services	27
Total Number of Non Fee Services	125
Total Number of Services	152

PAYSON REGIONAL CONSTABLE

Colt White

108 West Main Street Payson, Arizona 85541

Payson Regional Constable's Office,
Payson Regional
(928) 474-3844

ITEMIZED SERVICES by DATE RECEIVED for TREASURER

1/1/2013 TO 1/31/2013

Date: 2/6/2013

Date Received	Date Served	Case Number / Service	Plaintiff / Defendant	Person To Be Served / Address	Person Served / Address	Fees / Paid	Reference	Agency	Miles / Attempts
1/2/2013	1/2/2013	2012CV00321	Discover Bank	Charlotte Hulet & John/Jane Doe Hulet (if married)	Suzanne Francis, Guardian	$40.00	485003/8336	Superior Court Gila County	0
		Summons & Complaint; Certificate Of Compulsory Arbitration	Charlotte Hulet & John/Jane Doe Hulet (if married)	504 W Arabian Way Payson, AZ 85541-3072	504 W Arabian Way Payson, AZ 85541-3072	$40.00			1
1/2/2013	1/4/2013	DO201200140	Jake Dean Lamons	Jake Dean Lamons	Jake Dean Lamons	$56.00	485004	Superior Court Gila County	0
		Order To Appear; Petition For Modification Of Child Support, Visitation	Carylynn C Spencer	1107 S McLane Road #2 Payson, AZ 85541	1107 S McLane Road #2 Payson, AZ 85541	$56.00			1
1/3/2013	1/3/2013	2012CV000912	Teona Koutz	Claudia Jo Slover	Claudia Jo Slover	$0.00		Payson Regional Justice Court	0
		Injunction Against Harassment (Fee Waived By Ct)	Claudia Jo Slover	404 W. Bridle Path Lane Payson, AZ 85541	404 W. Bridle Path Lane Payson, AZ 85541	$0.00			1
1/14/2013	1/16/2013	CC2012-239614	Royal Ranch Homeowners Association	Michael Grim	Unserved	$67.20	485008/7396	Maricopa County-Hassayampa Justice Court	0
		Summons & Complaint	Michael Grim and Jennifer Grim	HC 1 Box 381 Strawberry, AZ 85544		$67.20			1
1/14/2013	1/16/2013	CC2012-239614	Royal Ranch Homeowners Association	Jennifer Grim	Jennifer Grim	$24.00	485008/7396	Maricopa County-Hassayampa Justice Court	0
		Summons & Complaint	Michael Grim and Jennifer Grim	HC 1 Box 381 Strawberry, AZ 85544	4945 Columbine Drive Strawberry, AZ 85544	$24.00			2
1/14/2013	1/22/2013	201108087	Zions Bank, a National Banking Association, c/o Robert S Porter, Esq.	Gordon Trucking, LLC, c/o Michael Gordon	Michael Walker Gordon	$61.00	485011/9928	Prescott Precint Justice Court	0
		WRIT OF GARNISHMENT	Paul R Archer and Holly M Archer, husband and wife	1100 N Ponderosa Cir Payson, AZ 85541	1100 N Pondersona Cir Payson, AZ 85541	$61.00			1
1/14/2013	1/14/2013	2013CV000027	Carole Susanne Hargrove	Tammie R. Mendoza	Gilberto Mendoza	$40.00	485005	Payson Regional Justice Court	0
		Injunction Against Harassment	Mikayla Mendoza, minor	502 E. Saguaro Payson, AZ 85541	502 E. Saguaro Payson, AZ 85541	$40.00			1

ITEMIZED SERVICES by DATE RECEIVED for TREASURER

1/1/2013 TO 1/31/2013

Date Received	Date Served	Case Number / Service	Plaintiff / Defendant	Person To Be Served / Address	Person Served / Address	Fees / Paid	Reference	Agency	Miles / Attempts
1/14/2013	1/14/2013	2013CV000028	Carole Susanne Hargrove	Barbara Warren	Barbara Warren	$40.00	485006	Payson Regional Justice Court	0
		Injunction Against Harassment	Kayla Warren, minor	701 E Juniper Street Payson, AZ 85541	701 E Juniper Street Payson, AZ 85541	$40.00			1
1/15/2013	1/22/2013	CV2011-00424	Canyon State Credit Union.	Red Feather Enterprises, LLC dba, Payson Feed & Pet Supply, garnishee c/o Connie Agnes, Statutory Agent	Payson Feed & Pet Supply, Breeze Sprague, Manager	$69.00	485009/1223	Superior Court Gila County	0
		Writ Of Garnishment (Earnings) & Summons	Casey C Bennett and Heather M Bennett, husband and wife	101 West Aero Payson, AZ 85541	101 W Aero Drive Payson, AZ 85541	$32.00			1
1/16/2013	1/16/2013	2013CV000029	Karen Dinovo	Jarred R Pfundheller	Jarred R Pfundheller	$40.00	485016	Payson Regional Justice Court	0
		Injunction Against Harassment	Jarred R Pfundheller	714 S Beeline Hwy Payson, AZ 85541	714 S Beeline Hwy Payson, AZ 85541	$40.00			1
1/16/2013	1/16/2013	2013CV000031	Flor Vazquez	Iris Alexandra Gonzalez-Felix	Iris Alexandra Gonzalez-Felix	$40.00	485010	Payson Regional Justice Court	0
		Injunction Against Harassment	Iris Alexandra Gonzalez-Felix	151 S. Moonlight Drive, #2 Star Valley, Az 85541	151 S. Moonlight Drive, #2 Star Valley, Az 85541	$40.00			2
1/16/2013	1/16/2013	2013CV000034	Joseph (Joe) Armstrong	Leticia Alatriz	Leticia Alatriz	$40.00	485018	Payson Regional Justice Court	0
		Injunction Against Harassment	Leticia Alatriz	1107 McLane #12 Payson, AZ 85541	1107 McLane #12 Payson, AZ 85541	$40.00			2
1/17/2013	1/22/2013	2013CV23SC	PJ Rental Properties LLC, Paul Bates and Joy Richards	Dave Burdick	Dave Burdick	$40.00	485012/2382	Payson Justice Court	0
		Notice & Summons	Dave Burdick	905 S Beeline Hwy Payson, AZ 85541	905 S Beeline Hwy Payson, AZ 85541	$40.00			1
1/17/2013	1/25/2013	2012CV651-SC	PJ Rental Properties LLC, Paul Bates and Joy Richards	Tiffany McDaniel	Tiffany McDaniel	$40.00	485012/2382	Payson Justice Court	0
		Notice & Summons	Tiffany McDaniel	112 W Bonita Payson, AZ 85541	3838 E Hwy 260 Star Valley, AZ 85541	$40.00			3
1/17/2013	1/17/2013	2013CV000039	Kathleen (Kathy) Bickert	Stephen Fenton	Stephen Fenton	$40.00	485013	Payson Regional Justice Court	0
		Injunction Against Harassment	Stephen Fenton	610 W Main Street # Payson, AZ 85541	610 W Main Street # Payson, AZ 85541	$40.00			1
1/22/2013	1/22/2013	DO2011-00356	James A McCaw	Sharon L. McCaw	Sharon L. McCaw	$60.00	485015	Superior Court Gila County	0
		Motion	Sharon L. McCaw	6793 Tonto Drive Pine, AZ 85544	6793 Tonto Drive Pine, AZ 85544	$60.00			3
1/23/2013	1/23/2013	2013CV000051	Timothy Lewis Hines	AJ Jordan	AJ Jordan	$40.00	485017	Payson Regional Justice Court	0
		Injunction Against Harassment	AJ Jordan	962 Oxbow Trail sp I&J Payson, AZ 85541	962 Oxbow Trail sp I&J Payson, AZ 85541	$40.00			1
1/23/2013	1/25/2013	CC2013-002767RC	Ashton Ranch Community Homeowners Association, Inc., an Arizona non-profit corporation	Luigi DiFabio	Unserved	$40.00	485019/7423	Maricopa County-Hassayampa Justice Court	0
		Summons & Complaint	Luigi DiFabio and Luciana DiFabio, husband and wife	706 West Colt Payson, AZ 85541		$40.00			1

ITEMIZED SERVICES by DATE RECEIVED for TREASURER

1/1/2013 TO 1/31/2013

Date Received	Date Served	Case Number / Service	Plaintiff / Defendant	Person To Be Served / Address	Person Served / Address	Fees / Paid	Reference	Agency	Miles / Attempts
1/23/2013	1/25/2013	CC2013-002767RC	Ashton Ranch Community Homeowners Association, Inc., an Arizona non-profit corporation	Luciana DiFabio	Unserved	$24.00	485019/7423	Maricopa County-Hassayampa Justice Court	0
		Summons & Complaint	Luigi DiFabio and Luciana DiFabio, husband and wife	706 West Colt Payson, AZ 85541		$24.00			1
1/23/2013	1/25/2013	DO2007-0388	Brandi Lynne Morris	Jerry Michael Morris	Jerry Michael Morris	$56.00	485020/11115	Superior Court Gila County	0
		Petition To Modify Child Custody, Parenting Time & Child Support	Jerry Michael Morris	406 Granite Butte Star Valley, AZ 85541	2000 N Beeline Hwy Payson, AZ 85541	$56.00			1
1/25/2013	1/25/2013	DO2005-373	Deborah Rose-Ellis	Christine Tetzloff, Phd	Christine Tetzloff, Phd	$40.00	485021	Superior Court Gila County	0
		Subpoena	Glynn Owen Ellis	814 N. Beeline Hwy, Suite I Payson, AZ 85541	814 N. Beeline Hwy, Suite I Payson, AZ 85541	$40.00			1
1/28/2013	1/28/2013	CC2012085181SC	Cactus Park Community Association, Inc	Carolyn A Fenwick aka Carolyn A Osterberg	Carolyn A Osterberg	$60.00	485022/32694	Maricopa County Manistee Justice Court	0
		Summons & Complaint	Robert J & Carolyn A Fenwick	6889 W Brokaw Lane Pine, AZ 85544	6889 W Brokaw Lane Pine, AZ 85544	$60.00			1
1/29/2013	1/29/2013	2013CV58FD	Ponderosa Glen MHP, Roy Haught	Timothy Mitchell	Posted-front door	$46.00	485023/5057	Payson Justice Court	0
		Summons & Complaint-Forcible Detainer	Timothy Mitchell	190 Cornerstone Way #28 Star Valley, AZ 85541	190 Cornerstone #28 Star Valley, AZ 85541	$46.00			1
1/29/2013	1/30/2013	2013CV60FD	Green Valley Apartments c/o Rick Croy	Marek Szcygiel	Posted-front door	$46.00	485025	Payson Regional Justice Court	0
		Summons & Complaint-Forcible Detainer	Marek Szcygiel	905 S McLane #7 Payson, AZ 85541	905 S McLane #7 Payson, AZ 85541	$46.00			1
1/29/2013	1/30/2013	2013CV61FD	Green Valley Apartments c/o Rick Croy	Donna Cleary	Posted-front door	$46.00	485026	Payson Justice Court	0
		Summons & Complaint-Forcible Detainer	Donna Cleary	905 S McLane #24 Payson, AZ 85541	905 S McLane #24 Payson, AZ 85541	$46.00			1
1/31/2013	2/4/2013	2013CV66-SC	Lisa Faircloth	Montezuma Hay Sales, Greg Jones	Montezuma Hay Sales, Greg Jones	$40.00	485027	Payson Justice Court	0
		Notice & Summons	Montezuma Hay Sales, Greg Jones	41481 Hwy 260 Star Valley, AZ 85541	41481 Hwy 260 Star Valley, AZ 85541	$40.00			4
1/31/2013	2/1/2013	2013CV73FD	William C. Epley	Daniel & Tiffany Woodward	Daniel Woodward	$46.00	485028	Payson Justice Court	0
		Summons & Complaint-Forcible Detainer	Daniel & Tiffany Woodward	600 W Forest Payson, AZ 85541	600 W Forest Payson, AZ 85541	$46.00			1

PAYSON REGIONAL CONSTABLE

Colt White

108 West Main Street Payson, Arizona 85541

Payson Regional Constable's Office,
Payson Regional
(928) 474-3844

ITEMIZED SERVICES by DATE RECEIVED

1/1/2013 TO 1/31/2013

Date: 2/6/2013

Date Received	Date Served	Case Number / Service	Plaintiff / Defendant	Person To Be Served / Address	Person Served / Address	Fees / Paid	Reference	Agency	Miles / Attempts
1/2/2013	1/4/2013	2012TR003113	State of Arizona	Jeffrey Pilkington	Unserved	$0.00		Payson Justice Court	0
		Summons & Complaint	Jeffrey Pilkington	1555 S Dream View Drive Tonto Basin, AZ 85553		$0.00			1
1/3/2013	1/4/2013	2012CR418	State of Arizona	Tonto Apache Tribal Police, Officer Q Goseyun	TAR Clipboard	$0.00		Payson Regional Justice Court	0
		Subpoena	Ronald Lee Hines	Tonto Apache Reservation Highway 87, Milepost 251 Payson, AZ 85541	TAR, Highway 87 Payson, AZ 85541	$0.00			1
1/3/2013	1/3/2013	2012CR012506	State of Arizona	Devin Swapp	Devin Swapp	$0.00		Payson Magistrate Court	0
		Summons & Complaint	Devin Swapp	1100 South Street Globe, AZ 85501	1100 South Street Globe, AZ 85501	$0.00			1
1/3/2013	1/14/2013	2012TR003054	State of Arizona	Elizabeth Wilson	Unserved	$0.00		Payson Justice Court	0
		Summons & Complaint	Elizabeth Wilson	573 N Javelina Road Payson, AZ 85541		$0.00			2
1/3/2013	1/4/2013	2012CR000623	State of Arizona	Michael Lee Lester	Steven Michael Helms	$0.00		Payson Justice Court	0
		Summons & Complaint	Michael Lee Lester	8180 W Stallion Payson, AZ 85541	2907 W Hughes Payson, AZ 85541	$0.00			1
1/3/2013	1/4/2013	2012CR012496	State of Arizona	Amy Michelle Gordon-Pantenburg	Unserved	$0.00		Payson Magistrate Court	0
		Summons & Complaint	Amy Michelle Gordon-Pantenburg	608 W. Barnum Circle Payson, AZ 85541		$0.00			1
1/3/2013	1/14/2013	2012CR012497	State of Arizona	Kennedy Norton	Kennedy Norton	$0.00		Payson Magistrate Court	0
		Summons & Complaint	Kennedy Norton	500 S Mariposa Street Payson, AZ 85541	8177 W Camino Real Payson, AZ 85541	$0.00			3
1/3/2013	1/14/2013	2012CR012498	State of Arizona	Walter Ryan	Unserved	$0.00		Payson Magistrate Court	0
		Summons & Complaint	Walter Ryan	1111 W Crestview Drive Payson, AZ 85541		$0.00			4
1/3/2013	1/4/2013	2012CR012499	State of Arizona	Scott Daniel Jackson	Scott Daniel Jackson	$0.00		Payson Magistrate Court	0
		Summons & Complaint	Scott Daniel Jackson	301 W. Bonita Street, #5 Payson, AZ 85541	301 W. Bonita Street, #5 Payson, AZ 85541	$0.00			1
1/3/2013	1/4/2013	2012CR012500	State of Arizona	Andrea Braswell	Unserved	$0.00		Payson Magistrate Court	0
		Summons & Complaint	Andrea Braswell	905 N. Beeline Highway, #15 Payson, AZ 85541		$0.00			2

ITEMIZED SERVICES by DATE RECEIVED

1/1/2013 TO 1/31/2013

Date Received	Date Served	Case Number / Service	Plaintiff / Defendant	Person To Be Served / Address	Person Served / Address	Fees / Paid	Reference	Agency	Miles / Attempts
1/3/2013	1/14/2013	2012CR012501	State of Arizona	Saley Shaheen	Unserved	$0.00		Payson Magistrate Court	0
		Summons & Complaint	Saley Shaheen	212 E McKamey Street Payson, AZ 85541		$0.00			4
1/3/2013	1/4/2013	2012CR012502	State of Arizona	Ashley VanBuskirk	Unserved	$0.00		Payson Magistrate Court	0
		Summons & Complaint	Ashley VanBuskirk	303 S Ash St #5 Payson, AZ 85541		$0.00			2
1/3/2013	1/4/2013	2012CR012503	State of Arizona	Ronald Lee Hines	Unserved	$0.00		Payson Magistrate Court	0
		Summons & Complaint	Ronald Lee Hines	203 N Airport Road Payson, AZ 85541		$0.00			1
1/3/2013	1/7/2013	2012CV000911	Teona Koutz	Martin Douglas Slover	Martin Douglas Slover	$0.00		Payson Regional Justice Court	0
		Order Of Protection	Martin Douglas Slover	1100 South Street Globe, AZ 85502	1100 South Street Globe, AZ 85502	$0.00			1
1/3/2013	1/4/2013	JV2012-110(2012-1)	State of Arizona	GCSO, Det. G. Ratliff	GCSO Clipboard	$0.00		Superior Court Gila County	0
		Subpoena	Bryce Cooke	GCSO, 108 W. Main Street Payson, AZ 85541	108 W. Main Street Payson, AZ 85541	$0.00			1
1/3/2013	1/4/2013	JV2012-110(2012-1)	State of Arizona	GCSO, Jacob Delecki	GCSO Clipboard	$0.00		Superior Court Gila County	0
		Subpoena	Bryce Cooke	108 W Main Street Payson, AZ 85541	108 W. Main Street Payson, AZ 85541	$0.00			1
1/3/2013	1/4/2013	JV2012-110(2012-1)	State of Arizona	GCSO, Deputy M. Havey	GCSO Clipboard	$0.00		Superior Court Gila County	0
		Subpoena	Bryce Cooke	108 W. Main Street Payson, AZ 85541	108 W. Main Street Payson, AZ 85541	$0.00			1
1/3/2013	1/4/2013	JV2012-109(2012-1)	State of Arizona	GCSO, Det. G. Ratliff	GCSO Clipboard	$0.00		Superior Court Gila County	0
		Subpoena	Jonah Reese May	GCSO, 108 W. Main Street Payson, AZ 85541	108 W. Main Street Payson, AZ 85541	$0.00			1
1/3/2013	1/4/2013	JV2012-109(2012-1)	State of Arizona	GCSO, Jacob Delecki	GCSO Clipboard	$0.00		Superior Court Gila County	0
		Subpoena	Jonah Reese May	108 W Main Street Payson, AZ 85541	108 W. Main Street Payson, AZ 85541	$0.00			1
1/3/2013	1/4/2013	JV2012-109(2012-1)	State of Arizona	GCSO, Deputy M. Havey	GCSO Clipboard	$0.00		Superior Court Gila County	0
		Subpoena	Jonah Reese May	108 W. Main Street Payson, AZ 85541	108 W. Main Street Payson, AZ 85541	$0.00			1
1/4/2013	1/4/2013	2012CR460	State of Arizona	Joy Richards	Joy Richards	$0.00		Payson Regional Justice Court	0
		Subpoena	Christopher Lynn Post	370 S Granite Ridge Road Star Valley, AZ 85541	424 S Beeline Hwy Payson, AZ 85541	$0.00			1
1/4/2013	1/4/2013	2012CR460	State of Arizona	GCSO, Deputy D Engler	GCSO Clipboard	$0.00		Payson Regional Justice Court	0
		Subpoena	Christopher Lynn Post	108 W Main Street Payson, AZ 85541	108 W. Main Street Payson, AZ 85541	$0.00			1
1/4/2013	1/4/2013	2012CR460	State of Arizona	Maureen Kirk	Unserved	$0.00		Payson Regional Justice Court	0
		Subpoena	Christopher Lynn Post	2425 E Enrose Street Payson, AZ 85541		$0.00			1
1/4/2013	1/4/2013	2012CR460	State of Arizona	John Nelson	John Nelson	$0.00		Payson Regional Justice Court	0
		Subpoena	Christopher Lynn Post	95 S Hillside Drive Star Valley, AZ 85541	95 S Hillside Drive Star Valley, AZ 85541	$0.00			1

ITEMIZED SERVICES by DATE RECEIVED

1/1/2013 TO 1/31/2013

Date Received	Date Served	Case Number / Service	Plaintiff / Defendant	Person To Be Served / Address	Person Served / Address	Fees / Paid	Reference	Agency	Miles / Attempts
1/4/2013	1/14/2013	2012CR418	State of Arizona	Mazatzal Hotel and Casino, Bill Tostensen, Security Dept	Mazatzal Hotel and Casino, Bill Tostensen, Security Dept	$0.00		Payson Regional Justice Court	0
		Subpoena	Ronald Lee Hines	Hwy 87 mm 251 Payson, AZ 85541	Hwy 87 mm 251 Payson, AZ 85541	$0.00			3
1/4/2013	1/14/2013	2012CR418	State of Arizona	Mazatzal Hotel and Casino, Mike Spaulding, Security Dept	Mazatzal Hotel and Casino, Mike Spaulding, Security Dept	$0.00		Payson Regional Justice Court	0
		Subpoena	Ronald Lee Hines	Hwy 87 mm 251 Payson, AZ 85541	602 E Miller Payson, AZ 85541	$0.00			2
1/14/2013	1/22/2013	2013CR000002	State of Arizona	Richard Allen Price	Unserved	$0.00		Payson Justice Court	0
		Summons & Complaint	Richard Allen Price	8327 W. Fossil Creek Road Strawberry, AZ 85544		$0.00			3
1/14/2013	1/14/2013	2012-221	State of Arizona	Gila County Narcotics Task Force, Det. R.A. McDaniel	Gila County Narcotics Task Force, Det. R.A. McDaniel	$0.00		Superior Court Gila County	0
		Subpoena	Jonathan J. Bluebird	108 W. Main Street Payson, AZ 85541	108 W. Main Street Payson, AZ 85541	$0.00			1
1/14/2013	1/18/2013	2012-221	State of Arizona	Dept of Economic Security, Doc Dimbat, Special Investigator	Dept of Economic Security, Doc Dimbat, Special Investigator	$0.00		Superior Court Gila County	0
		Subpoena	Jonathan J. Bluebird	100 N Tonto Ste 100 Payson, AZ 85541	100 N Tonto Ste 100 Payson, AZ 85541	$0.00			1
1/14/2013	2/1/2013	2012-221	State of Arizona	Tommy Holdren, Jr.	Tommy Holdren, Jr.	$0.00		Superior Court Gila County	0
		Subpoena	Jonathan J. Bluebird	412 S. Ponderosa Street Payson, AZ 85541	801 W. Longhorn Road, #4 Payson, AZ 85541	$0.00			9
1/14/2013	1/18/2013	2012-221	State of Arizona	Walmart, Tami Levendowski, Loss Prevention	Walmart, Tami Levendowski, Loss Prevention	$0.00		Superior Court Gila County	0
		Subpoena	Jonathan J. Bluebird	300 N Beeline Hwy Payson, AZ 85541	300 N Beeline Hwy Payson, AZ 85541	$0.00			1
1/14/2013	1/18/2013	2012-221	State of Arizona	Alex Mourax	Alex Mourax	$0.00		Superior Court Gila County	0
		Subpoena	Jonathan J. Bluebird	502 W Main Street Payson, AZ 85541	502 W Main Street Payson, AZ 85541	$0.00			2
1/14/2013	1/22/2013	2012-221	State of Arizona	Laverne Jablonsky	Unserved	$0.00		Superior Court Gila County	0
		Subpoena	Jonathan J. Bluebird	310 S Goodnow Payson, AZ 85541		$0.00			3
1/14/2013	1/30/2013	2012-221	State of Arizona	Denise Foster	Unserved	$0.00		Superior Court Gila County	0
		Subpoena	Jonathan J. Bluebird	308 S Goodnow Payson, AZ 85541		$0.00			4
1/14/2013	1/18/2013	2012-221	State of Arizona	Payson Police Department, Ofc. J. Johnson	PPD Clipboard	$0.00		Superior Court Gila County	0
		Subpoena	Jonathan J. Bluebird	303 N. Beeline Highway Payson, AZ 85541	303 N. Beeline Highway Payson, AZ 85541	$0.00			1
1/14/2013	1/18/2013	2012-221	State of Arizona	Payson Police Department, Ofc. L. Ortiz	PPD Clipboard	$0.00		Superior Court Gila County	0
		Subpoena	Jonathan J. Bluebird	303 N. Beeline Highway Payson, AZ 85541	303 N. Beeline Highway Payson, AZ 85541	$0.00			1
1/14/2013	1/18/2013	2012-221	State of Arizona	Payson Police Department, Ofc. J. Meredith	PPD Clipboard	$0.00		Superior Court Gila County	0
		Subpoena	Jonathan J. Bluebird	303 N. Beeline Highway Payson, AZ 85541	303 N. Beeline Highway Payson, AZ 85541	$0.00			1

ITEMIZED SERVICES by DATE RECEIVED

1/1/2013 TO 1/31/2013

Date Received	Date Served	Case Number / Service	Plaintiff / Defendant	Person To Be Served / Address	Person Served / Address	Fees / Paid	Reference	Agency	Miles / Attempts
1/14/2013	1/18/2013	2012-221	State of Arizona	Payson Police Department, Detective M. Varga	PPD Clipboard	$0.00		Superior Court Gila County	0
		Subpoena	Jonathan J. Bluebird	303 N. Beeline Highway Payson, AZ 85541	303 N. Beeline Highway Payson, AZ 85541	$0.00			1
1/14/2013	1/18/2013	JV2010-062 Petition 2013-1	State of Arizona	minor	minor	$0.00		Juvenile Court Gila County	0
		Notice To Appear; Petition	minor	190 N Cornerstone Way #48 Star Valley, AZ 85541	301 S McLane Payson, AZ 85541	$0.00			1
1/14/2013	1/23/2013	JV2010-062 Petition 2013-1	State of Arizona	Jesus Manuel Osorio-Espinoza	Jesus Manuel Osorio-Espinoza	$0.00		Juvenile Court Gila County	0
		Notice To Appear; Petition	minor	190 N Cornerstone Way #48 Star Valley, AZ 85541	Bar T Bar Ranch Payson, AZ 85541	$0.00			1
1/14/2013	1/18/2013	JV2013-006 Petition 2013-1	State of Arizona	minor	minor	$0.00		Juvenile Court Gila County	0
		Notice To Appear; Petition	minor	2808 E Pinegate Court Payson, AZ 85541	2808 E Pinegate Court Payson, AZ 85541	$0.00			1
1/14/2013	1/18/2013	JV2013-006 Petition 2013-1	State of Arizona	Richard Cook	Richard Cook	$0.00		Juvenile Court Gila County	0
		Notice To Appear; Petition	minor	2808 E Pinegate Court Payson, AZ 85541	2808 E Pinegate Court Payson, AZ 85541	$0.00			1
1/14/2013	1/18/2013	JV2013-004 Petiton 2013-1	State of Arizona	minor	minor	$0.00		Juvenile Court Gila County	0
		Notice To Appear; Petition	minor	207 W Pecan Street Payson, AZ 85541	207 W Pecan Street Payson, AZ 85541	$0.00			1
1/14/2013	1/18/2013	JV2013-004 Petiton 2013-1	State of Arizona	Robert Picking	Robert Picking	$0.00		Juvenile Court Gila County	0
		Notice To Appear; Petition	minor	207 E Pecan Street Payson, AZ 85541	207 E Pecan Street Payson, AZ 85541	$0.00			1
1/14/2013	1/22/2013	JV2013-007 Petition 2013-1	State of Arizona	minor	minor	$0.00		Juvenile Court Gila County	0
		Notice To Appear; Petition	minor	1000 W Summit Payson, AZ 85541	1000 W Summit Payson, AZ 85541	$0.00			3
1/14/2013	1/18/2013	JV2013-007 Petition 2013-1	State of Arizona	Daniel Groeneveld	Daniel Groeneveld	$0.00		Juvenile Court Gila County	0
		Notice To Appear; Petition	minor	1000 W Summit Payson, AZ 85541	214 W Main Payson, AZ 85541	$0.00			3
1/14/2013	1/18/2013	JV2013-005 Petition 2013-1	State of Arizona	minor	minor	$0.00		Juvenile Court Gila County	0
		Notice To Appear; Petition	minor	406 W Granite Butte Road Payson, AZ 85541	304 S Meadow Payson, AZ 85541	$0.00			1
1/14/2013	1/18/2013	JV2013-005 Petition 2013-1	State of Arizona	Christopher Conway	Rebecca Conway, mother	$0.00		Juvenile Court Gila County	0
		Notice To Appear; Petition	minor	406 W Granite Butte Road Payson, AZ 85541	111 W Cedar Payson, AZ 85541	$0.00			1
1/15/2013	1/16/2013	2012TR12488	State of Arizona	GCSO, Jacob Delecki	GCSO Clipboard	$0.00		Payson Regional Justice Court	0
		Order For Telephonic Deposition	David Harper	108 W Main Street Payson, AZ 85541	108 W. Main Street Payson, AZ 85541	$0.00			1
1/15/2013	1/16/2013	2012CR537	State of Arizona	GCSO, Jacob Delecki	GCSO Clipboard	$0.00		Payson Regional Justice Court	0
		Subpoena	Denisya Johnson	108 W Main Street Payson, AZ 85541	108 W. Main Street Payson, AZ 85541	$0.00			1
1/15/2013	1/16/2013	2012CR537	State of Arizona	GCSO, Detective J. Garrett	GCSO Clipboard	$0.00		Payson Regional Justice Court	0
		Subpoena	Denisya Johnson	GCSO, 108 W. Main Street Payson, AZ 85541	108 W. Main Street Payson, AZ 85541	$0.00			1

ITEMIZED SERVICES by DATE RECEIVED

1/1/2013 TO 1/31/2013

Date Received	Date Served	Case Number / Service	Plaintiff / Defendant	Person To Be Served / Address	Person Served / Address	Fees / Paid	Reference	Agency	Miles / Attempts
1/15/2013	1/16/2013	2012CR537	State of Arizona	GCSO, Deputy L. Kerszykowski	GCSO Clipboard	$0.00		Payson Regional Justice Court	0
		Subpoena	Denisya Johnson	108 W. Main Street Payson, AZ 85541	108 W. Main Street Payson, AZ 85541	$0.00			1
1/15/2013	1/16/2013	2012CR537	State of Arizona	Ruby Sturtz	Ruby Sturtz	$0.00		Payson Regional Justice Court	0
		Subpoena	Denisya Johnson	190 N. Cornerstone Way, #49 Star Valley, AZ 85541	301 S McLane Road Payson, AZ 85541	$0.00			1
1/15/2013	1/17/2013	2012CR537	State of Arizona	Summer Dawn Carroll	Summer Dawn Carroll	$0.00		Payson Regional Justice Court	0
		Subpoena	Denisya Johnson	190 Cornerstone #48 Star Valley, AZ 85541	190 Cornerstone #48 Star Valley, AZ 85541	$0.00			3
1/15/2013	1/22/2013	2012CR537	State of Arizona	Richard Suarez	Richard Suarez	$0.00		Payson Regional Justice Court	0
		Subpoena	Denisya Johnson	190 Cornerstone #48 Star Valley, AZ 85541	301 S McLane Payson, AZ 85541	$0.00			1
1/15/2013	1/16/2013	2012CR537	State of Arizona	Tina Louise Webb	Tina Louise Webb	$0.00		Payson Regional Justice Court	0
		Subpoena	Denisya Johnson	190 Cornerstone Way, #46 Star Valley, AZ 85541	301 S McLane Road Payson, AZ 85541	$0.00			1
1/15/2013	1/16/2013	2012CR537	State of Arizona	Eugene Knorr	Eugene Knorr	$0.00		Payson Regional Justice Court	0
		Subpoena	Denisya Johnson	190 Cornerstone #49 Star Valley, AZ 85541	108 W Main Street Payson, AZ 85541	$0.00			3
1/16/2013	1/16/2013	2012CV000030	Brandy Reynolds	Stephen Reynolds	Stephen Reynolds	$0.00		Payson Regional Justice Court	0
		Order Of Protection	Stephen Reynolds	105 E Main Street #124 Payson, AZ 85541	105 E Main Street #124 Payson, AZ 85541	$0.00			1
1/16/2013	1/16/2013	2013CV000032	Joshua Stauffer	Deanne Goebel	Deanne Goebel	$0.00		Payson Regional Justice Court	0
		Order Of Protection	Deanne Goebel	110 W Main Street Payson, AZ 85541	204 E Jura Apt C PO Box 2965 Payson, AZ 85541	$0.00			1
1/16/2013	1/16/2013	2013CV000033	Stephen Reynolds	Brandy Reynolds	Brandy Reynolds	$0.00		Payson Regional Justice Court	0
		Order Of Protection	Brandy Reynolds	305 E Wade Lane Payson, AZ 85541	305 E Wade Lane Payson, AZ 85541	$0.00			1
1/17/2013	1/18/2013	2012-104	State of Arizona	GCSO, Deputy L. Kerszykowski	GCSO Clipboard	$0.00		Superior Court Gila County	0
		Subpoena	Frances Anne Busby	108 W. Main Street Payson, AZ 85541	108 W. Main Street Payson, AZ 85541	$0.00			1
1/17/2013	1/18/2013	2012-104	State of Arizona	GCSO, Deputy C. Maxwell	GCSO Clipboard	$0.00		Superior Court Gila County	0
		Subpoena	Frances Anne Busby	GCSO, 108 W. Main Street Payson, AZ 85541	108 W. Main Street Payson, AZ 85541	$0.00			1
1/17/2013	1/18/2013	2012-104	State of Arizona	GCSO, Det. G. Ratliff	GCSO Clipboard	$0.00		Superior Court Gila County	0
		Subpoena	Frances Anne Busby	GCSO, 108 W. Main Street Payson, AZ 85541	108 W. Main Street Payson, AZ 85541	$0.00			1
1/17/2013	1/18/2013	2012-104	State of Arizona	Gila County Narcotics Task Force, Det. T.R. Phillips	GCSO Clipboard	$0.00		Superior Court Gila County	0
		Subpoena	Frances Anne Busby	108 W. Main Street Payson, AZ 85541	108 W. Main Street Payson, AZ 85541	$0.00			1
1/17/2013	1/18/2013	2012-104	State of Arizona	Gila County Narcotics Task Force, Det. R.A. McDaniel	GCSO Clipboard	$0.00		Superior Court Gila County	0
		Subpoena	Frances Anne Busby	108 W. Main Street Payson, AZ 85541	108 W. Main Street Payson, AZ 85541	$0.00			1

ITEMIZED SERVICES by DATE RECEIVED

1/1/2013 TO 1/31/2013

Date Received	Date Served	Case Number / Service	Plaintiff / Defendant	Person To Be Served / Address	Person Served / Address	Fees / Paid	Reference	Agency	Miles / Attempts
1/17/2013	1/23/2013	2012-104	State of Arizona	Terry C. Gaden	Terry C. Gaden	$0.00		Superior Court Gila County	0
		Subpoena	Frances Anne Busby	3588 S Forest Service Road 184 Payson, AZ 85541	Del Shay Payson, AZ 85541	$0.00			2
1/17/2013	1/18/2013	2012-104	State of Arizona	GCSO, Deputy D. Newman	GCSO Clipboard	$0.00		Superior Court Gila County	0
		Subpoena	Frances Anne Busby	108 W. Main Street Payson, AZ 85541	108 W. Main Street Payson, AZ 85541	$0.00			1
1/17/2013	1/18/2013	2012TC012079	State of Arizona	PPD, Officer McDonough	PPD Clipboard	$0.00		Payson Magistrate Court	0
		Subpoena	Sine Scott	303 N Beeline Highway Payson, AZ 85541	303 N. Beeline Highway Payson, AZ 85541	$0.00			1
1/17/2013	1/18/2013	2012TC012079	State of Arizona	Gordon Black	Gordon Black	$0.00		Payson Magistrate Court	0
		Subpoena	Sine Scott	202 S Thomas Lane Payson, AZ 85541	202 S Thomas Lane Payson, AZ 85541	$0.00			2
1/17/2013	1/25/2013	2012TC012079	State of Arizona	Larry Maniag	Larry Maniag	$0.00		Payson Magistrate Court	0
		Subpoena	Sine Scott	201 S Thomas Ln Payson, AZ 85541	201 S Thomas Ln Payson, AZ 85541	$0.00			3
1/17/2013	1/18/2013	2012TR002998	State of Arizona	GCSO, Jacob Delecki	GCSO Clipboard	$0.00		Payson Justice Court	0
		Subpoena	Kyle Disilvestro	108 W Main Street Payson, AZ 85541	108 W. Main Street Payson, AZ 85541	$0.00			1
1/17/2013	1/18/2013	2012TR002688	State of Arizona	Department of Public Safety, Ofc. T. Harold	DPS Clipboard - Payson	$0.00		Payson Justice Court	0
		Subpoena	Norma Steele	Department of Public Safety 201 N. Colcord Road Payson, AZ 85541	Payson DPS Office Payson, AZ 85541	$0.00			1
1/17/2013	1/18/2013	2010CV704-SC	Steven N. Booth, DDS, PC	Steven N. Booth, DDS, PC	Steven Booth DDS, Alisa Wessel, Office Manager	$0.00		Payson Justice Court	0
		Order To Appear	Nora Noriega-Charleston	120 E. Main Street, Ste. B Payson, AZ 85541	120 E Main Street Payson, AZ 85541	$0.00			2
1/17/2013	1/18/2013	2010CV704-SC	Steven N. Booth, DDS, PC	Nora Noriega-Charleston	Nora Noriega-Charleston	$0.00		Payson Justice Court	0
		Order To Appear	Nora Noriega-Charleston	1207 N William Tell Circle Payson, AZ 85541	1207 N William Tell Circle Payson, AZ 85541	$0.00			1
1/17/2013	1/25/2013	2010CV101-UN	Capital One Bank (USA), N.A.	Excellent and Quality Drywall, Inc, garnishee, Alonso Munoz, Authorized Agent	Maria Munoz	$0.00		Payson Regional Justice Court	0
		Order To Appear	Alonso Munoz, Jr., minor	905 W Prairie Drive Payson, AZ 85541	108 W Main Street Payson, AZ 85541	$0.00			2
1/17/2013	1/18/2013	JV2013-013 Petition 2013-1	State of Arizona	Arnold Stonebrink	Penni Stonebrink	$0.00		Juvenile Court Gila County	0
		Notice To Appear; Petition	[redacted] minor	211 W Sherwood Payson, AZ 85541	211 W Sherwood Payson, AZ 85541	$0.00			1
1/17/2013	1/18/2013	JV2013-014 Petition 2013-1	State of Arizona	[redacted] minor	[redacted] minor	$0.00		Juvenile Court Gila County	0
		Notice To Appear; Petition	[redacted] minor	801 E Frontier Street Payson, AZ 85541	301 S McLane Payson, AZ 85541	$0.00			1
1/17/2013	1/18/2013	JV2013-014 Petition 2013-1	State of Arizona	Tanya Cline	Tanya Cline	$0.00		Juvenile Court Gila County	0
		Notice To Appear; Petition	[redacted] minor	801 E Frontier Street Payson, AZ 85541	801 E Frontier Street Payson, AZ 85541	$0.00			1

ITEMIZED SERVICES by DATE RECEIVED

1/1/2013 TO 1/31/2013

Date Received	Date Served	Case Number / Service	Plaintiff / Defendant	Person To Be Served / Address	Person Served / Address	Fees / Paid	Reference	Agency	Miles / Attempts
1/17/2013	1/23/2013	2012TC012078	State of Arizona	Payson Police Department, Ofc. L. Ortiz	PPD Clipboard	$0.00		Payson Magistrate Court	0
		Subpoena	Beau James Lootans	303 N. Beeline Highway Payson, AZ 85541	303 N. Beeline Highway Payson, AZ 85541	$0.00			1
1/17/2013	1/25/2013	2012TC012078	State of Arizona	Jeremy Hammer	Jeremy Hammer	$0.00		Payson Magistrate Court	0
		Subpoena	Beau James Lootans	720 W Summit Street Payson, AZ 85541	720 W Summit Street Payson, AZ 85541	$0.00			3
1/17/2013	1/25/2013	2012-193	State of Arizona	GCSO, Deputy T. Hensley	GCSO Clipboard	$0.00		Superior Court Gila County	0
		Subpoena	Scott Michael Brakefield	108 W. Main Street Payson, AZ 85541	108 W. Main Street Payson, AZ 85541	$0.00			1
1/17/2013	2/4/2013	2012-193	State of Arizona	Loran Eaton	Loran Eaton	$0.00		Superior Court Gila County	0
		Subpoena	Scott Michael Brakefield	4M Desert Rose Drive Tonto Basin, AZ 85553	191 Desert Rose Drive Tonto Basin, AZ 85553	$0.00			3
1/17/2013	1/25/2013	2012-193	State of Arizona	GCSO, Detective J. Garrett	GCSO Clipboard	$0.00		Superior Court Gila County	0
		Subpoena	Scott Michael Brakefield	GCSO, 108 W. Main Street Payson, AZ 85541	108 W. Main Street Payson, AZ 85541	$0.00			1
1/17/2013	1/25/2013	2012-193	State of Arizona	GCSO, Deputy C. Maxwell	GCSO Clipboard	$0.00		Superior Court Gila County	0
		Subpoena	Scott Michael Brakefield	GCSO, 108 W. Main Street Payson, AZ 85541	108 W. Main Street Payson, AZ 85541	$0.00			1
1/17/2013	1/28/2013	2012-193	State of Arizona	Frankie Rocco	Frankie Rocco	$0.00		Superior Court Gila County	0
		Subpoena	Scott Michael Brakefield	23 Old Hwy 188 Tonto Basin, AZ 85553	23 Old Hwy 188 Tonto Basin, AZ 85553	$0.00			1
1/17/2013	1/28/2013	2012-193	State of Arizona	Chris Halsey	Chris Halsey	$0.00		Superior Court Gila County	0
		Subpoena	Scott Michael Brakefield	199 Purtill Trail Tonto Basin, AZ 85553	23 Old Hwy 188 Tonto Basin, AZ 85553	$0.00			1
1/17/2013	1/25/2013	2012-193	State of Arizona	GCSO, Deputy T. Nudson	GCSO Clipboard	$0.00		Superior Court Gila County	0
		Subpoena	Scott Michael Brakefield	108 W. Main Street Payson, AZ 85541	108 W. Main Street Payson, AZ 85541	$0.00			1
1/17/2013	1/23/2013	2012-219	State of Arizona	Cade Connolly	Cade Connolly	$0.00		Superior Court Gila County	0
		Subpoena	Rachel Ann Jones aka Rachel Ann Connolly	409 E Rancho Road Payson, AZ 85541	409 E Rancho Road Payson, AZ 85541	$0.00			2
1/17/2013	1/25/2013	2012-219	State of Arizona	Carlos Frausto	Unserved	$0.00		Superior Court Gila County	0
		Subpoena	Rachel Ann Jones aka Rachel Ann Connolly	105 E Main Street #101 Payson, AZ 85541		$0.00			2
1/17/2013	1/23/2013	2012-219	State of Arizona	Payson Police Department, Ofc. J. Davies	PPD Clipboard	$0.00		Superior Court Gila County	0
		Subpoena	Rachel Ann Jones aka Rachel Ann Connolly	303 N. Beeline Highway Payson, AZ 85541	303 N. Beeline Highway Payson, AZ 85541	$0.00			1

ITEMIZED SERVICES by DATE RECEIVED

1/1/2013 TO 1/31/2013

Date Received	Date Served	Case Number / Service	Plaintiff / Defendant	Person To Be Served / Address	Person Served / Address	Fees / Paid	Reference	Agency	Miles / Attempts
1/17/2013	1/25/2013	2012-219	State of Arizona	Alexandra Frausto	Alexandra Frausto	$0.00		Superior Court Gila County	0
		Subpoena	Rachel Ann Jones aka Rachel Ann Connolly	105 E Main Street #101 Payson, AZ 85541	105 E Main Street #101 Payson, AZ 85541	$0.00			2
1/22/2013	1/22/2013	2013CV000045	Lindsay Ann Nichols	Sean Dillon	Sean Dillon	$0.00		Payson Regional Justice Court	0
		Order Of Protection	Sean Dillon	107 E Airline Blvd Payson, AZ 85541	107 E Airline Blvd Payson, AZ 85541	$0.00			1
1/22/2013	1/23/2013	CP1012-004	County of Gila	Rickie Paul Wood	Rickie Paul Wood	$0.00		N/A	0
		Notice Of Continuance Of Hearing	Rickie Paul Wood & Nelly Jean Golslin	326 S. River Road Gisela, AZ 85541	199 S Elm Gisela, AZ 85541	$0.00			1
1/22/2013	1/23/2013	CP1012-004	County of Gila	Nelly Jean Golslin	Nelly Jean Golslin	$0.00		N/A	0
		Notice Of Continuance Of Hearing	Rickie Paul Wood & Nelly Jean Golslin	326 S. River Road Gisela, AZ 85541	326 S. River Road Gisela, AZ 85541	$0.00			1
1/22/2013	1/23/2013	2012TR003065	State of Arizona	Department of Public Safety, Ofc. T. Harold	DPS Clipboard - Payson	$0.00		Payson Justice Court	0
		Subpoena	David Shapiro	Department of Public Safety 201 N. Colcord Road Payson, AZ 85541	Payson DPS Office Payson, AZ 85541	$0.00			1
1/22/2013	1/22/2013	DO201300024	Melissa Moore	Michael Moore	Michael Moore	$0.00		Superior Court Gila County	0
		Order Of Protection	Michael Moore	501 E Rancho Road Payson, AZ 85541	501 E Rancho Road Payson, AZ 85541	$0.00			1
1/23/2013	1/30/2013	2012TR12161	State of Arizona	Isaac Bradford, c/o Calvary Chapel	Isaac Bradford, c/o Calvary Chapel	$0.00		Payson Magistrate Court	0
		Subpoena	Christopher Lester Elman	1103 N Beeline Hwy Payson, AZ 85541	1103 N Beeline Hwy Payson, AZ 85541	$0.00			3
1/23/2013	1/25/2013	2012TR12161	State of Arizona	GCSO, Deputy L. Kerszykowski	GCSO Clipboard	$0.00		Payson Magistrate Court	0
		Subpoena	Christopher Lester Elman	108 W. Main Street Payson, AZ 85541	108 W. Main Street Payson, AZ 85541	$0.00			1
1/23/2013	1/25/2013	2012TR12161	State of Arizona	Payson Police Department, Sgt. Jason Hazelo	PPD Clipboard	$0.00		Payson Magistrate Court	0
		Subpoena	Christopher Lester Elman	303 N. Beeline Highway Payson, AZ 85541	303 N. Beeline Highway Payson, AZ 85541	$0.00			1
1/23/2013	1/25/2013	2012TR12161	State of Arizona	Payson Police Department, Ofc. L. Ortiz	PPD Clipboard	$0.00		Payson Magistrate Court	0
		Subpoena	Christopher Lester Elman	303 N. Beeline Highway Payson, AZ 85541	303 N. Beeline Highway Payson, AZ 85541	$0.00			1
1/23/2013	1/25/2013	2012CR12075	State of Arizona	Claudia Jo Slover	Claudia Jo Slover	$0.00		Payson Regional Justice Court	0
		Order To Show Cause	Claudia Jo Slover	404 W. Bridle Path Lane Payson, AZ 85541	404 W. Bridle Path Lane Payson, AZ 85541	$0.00			1
1/23/2013	1/25/2013	2013TR012022	State of Arizona	Matthew Shane Johnson, Sr.	Matthew Shane Johnson, Sr.	$0.00		Payson Magistrate Court	0
		Summons & Complaint	Matthew Shane Johnson, Sr.	105 E Main Street #205 Payson, AZ 85541	Tonto Apache Reservation Payson, AZ 85541	$0.00			2
1/23/2013	1/25/2013	2013CR012011	State of Arizona	Paige Suftko	Paige Suftko	$0.00		Payson Justice Court	0
		Summons & Complaint	Paige Suftko	801 E Frontier Street #39 Payson, AZ 85541	108 W Main Street Payson, AZ 85541	$0.00			5

ITEMIZED SERVICES by DATE RECEIVED

1/1/2013 TO 1/31/2013

Date Received	Date Served	Case Number / Service	Plaintiff / Defendant	Person To Be Served / Address	Person Served / Address	Fees / Paid	Reference	Agency	Miles / Attempts
1/23/2013	1/28/2013	2013CR012013	State of Arizona	Miguel Samarripas	Miguel Samarripas	$0.00		Payson Magistrate Court	0
		Summons & Complaint	Miguel Samarripas	208 E. Cherry Street Payson, AZ 85541	1100 S Street Globe, AZ 85502	$0.00			4
1/23/2013	1/31/2013	2013CR012014	State of Arizona	George D. Kendall	Unserved	$0.00		Payson Magistrate Court	0
		Summons & Complaint	George D. Kendall	1604 N. Maverick Circle Payson, AZ 85541		$0.00			4
1/23/2013	1/28/2013	CR2013-00023	State of Arizona	Amber Cundiff	Amber Cundiff	$0.00		Superior Court Gila County	0
		Summons	Amber Cundiff	76 Latigo Lane Payson, AZ 85541	W Main Street Payson, AZ 85541	$0.00			4
1/23/2013	1/24/2013	2013CV000052	Lori Lyne Sandretto	Sharon Spessard	Sharon Spessard	$0.00		Payson Regional Justice Court	0
		Order Of Protection	Sharon Spessard	1100 Granite Drive Payson, AZ 85541	1100 Granite Drive Payson, AZ 85541	$0.00			4
1/24/2013	1/25/2013	JV2012-125	State of Arizona	Payson Police Department, Ofc. M. Zimmerman	PPD Clipboard	$0.00		Superior Court Gila County	0
		Subpoena	[redacted] minor	303 N. Beeline Highway Payson, AZ 85541	303 N. Beeline Highway Payson, AZ 85541	$0.00			1
1/24/2013	1/25/2013	JV2012-125	State of Arizona	Colt White, Constable	Colt White, Constable	$0.00		Superior Court Gila County	0
		Subpoena	[redacted] minor	108 W. Main Street Payson, AZ 85541	108 W. Main Street Payson, AZ 85541	$0.00			1
1/24/2013	1/28/2013	JV2012-125	State of Arizona	Coty Garcia	Coty Garcia	$0.00		Superior Court Gila County	0
		Subpoena	[redacted] minor	300 W Frontier Street #19 Payson, AZ 85541	300 W Frontier Street #19 Payson, AZ 85541	$0.00			3
1/24/2013	1/28/2013	JV2012-125	State of Arizona	Brandy Sharp	Brandy Sharp	$0.00		Superior Court Gila County	0
		Subpoena	[redacted] minor	300 W Frontier #19 Payson, AZ 85541	300 W Frontier #19 Payson, AZ 85541	$0.00			1
1/25/2013	1/25/2013	2013CV000055	Joanne Selvey	Mason Selvey	Mason Selvey	$0.00		Payson Regional Justice Court	0
		Order Of Protection	Mason Selvey	1100 South Street Globe, AZ 85502	1100 South Street Globe, AZ 85502	$0.00			1
1/25/2013	1/28/2013	2013CV000056	Yesenia Sherman	Sherrie Saavedra	Sherrie Saavedra	$0.00		Payson Regional Justice Court	0
		Order Of Protection	Sherrie Saavedra	410 S Ponderosa Payson, AZ 85541	410 S Ponderosa Payson, AZ 85541	$0.00			3
1/25/2013	1/28/2013	JV2011-016 Petition 2012-1	State of Arizona	Alonso Munoz, Sr.	Maria Munoz	$0.00		Superior Court Gila County	0
		Notice To Appear; Petition	[redacted] minor	405 W Black Forest Lane Payson, AZ 85541	405 W Black Forest Lane Payson, AZ 85541	$0.00			1
1/28/2013	1/28/2013	2012CR580	State of Arizona	GCSO, Deputy S Osborne	GCSO Clipboard	$0.00		Payson Regional Justice Court	0
		Subpoena	Patrice Louise Chambers	108 W Main Street Payson, AZ 85541	108 W. Main Street Payson, AZ 85541	$0.00			1
1/28/2013	1/28/2013	2012CR580	State of Arizona	GCSO, Deputy M. Havey	GCSO Clipboard	$0.00		Payson Regional Justice Court	0
		Subpoena	Patrice Louise Chambers	108 W. Main Street Payson, AZ 85541	108 W. Main Street Payson, AZ 85541	$0.00			1
1/28/2013	1/28/2013	2012CR580	State of Arizona	GCSO, Deputy T. Nudson	GCSO Clipboard	$0.00		Payson Regional Justice Court	0
		Subpoena	Patrice Louise Chambers	108 W. Main Street Payson, AZ 85541	108 W. Main Street Payson, AZ 85541	$0.00			1

ITEMIZED SERVICES by DATE RECEIVED

1/1/2013 TO 1/31/2013

Date Received	Date Served	Case Number / Service	Plaintiff / Defendant	Person To Be Served / Address	Person Served / Address	Fees / Paid	Reference	Agency	Miles / Attempts
1/28/2013	2/4/2013	2012CR580	State of Arizona	Roxanne C. Osbonlighter	Roxanne C. Osbonlighter	$0.00		Payson Regional Justice Court	0
		Subpoena	Patrice Louise Chambers	Lot 82, Punkin Center Village Tonto Basin, AZ 85553	215 S Butcher Hook Drive Tonto Basin, AZ 85553	$0.00			4
1/28/2013	1/28/2013	2012CR581	State of Arizona	GCSO, Deputy S Osborne	GCSO Clipboard	$0.00		Payson Regional Justice Court	0
		Subpoena	Randall Michael Eddy	108 W Main Street Payson, AZ 85541	108 W. Main Street Payson, AZ 85541	$0.00			1
1/28/2013	1/28/2013	2012CR581	State of Arizona	GCSO, Deputy M. Havey	GCSO Clipboard	$0.00		Payson Regional Justice Court	0
		Subpoena	Randall Michael Eddy	108 W. Main Street Payson, AZ 85541	108 W. Main Street Payson, AZ 85541	$0.00			1
1/28/2013	1/28/2013	2012CR581	State of Arizona	GCSO, Deputy T. Nudson	GCSO Clipboard	$0.00		Payson Regional Justice Court	0
		Subpoena	Randall Michael Eddy	108 W. Main Street Payson, AZ 85541	108 W. Main Street Payson, AZ 85541	$0.00			1
1/28/2013	2/4/2013	2012CR581	State of Arizona	Roxanne C. Osbonlighter	Roxanne C. Osbonlighter	$0.00		Payson Regional Justice Court	0
		Subpoena	Randall Michael Eddy	Lot 82, Punkin Center Village Tonto Basin, AZ 85553	215 S Butcher Hook Drive Tonto Basin, AZ 85553	$0.00			2
1/28/2013	1/28/2013	2012TR2648	State of Arizona	Department of Public Safety, Ofc. H. Thomason	DPS Clipboard - Payson	$0.00		Payson Regional Justice Court	0
		Subpoena	Marjorie Schmidt	Department of Public Safety-Payson Office ,	Payson DPS Office Payson, AZ 85541	$0.00			1
1/29/2013	1/29/2013	2013CV000062	Paul Greene	Jennifer Charlton	Jennifer Charlton	$0.00		Payson Regional Justice Court	0
		Order Of Protection	Jennifer Charlton	908 W Briddle Path Payson, AZ 85541	908 W Briddle Path Payson, AZ 85541	$0.00			4
1/31/2013		2013TR000341	State of Arizona	Clinton Lee Ulmer		$0.00		Payson Justice Court	0
		Summons & Complaint	Clinton Lee Ulmer	402 E Sherwood Street Payson, AZ 85541		$0.00			0

MILEAGE FOR THE MONTH January 2013

DATE	MILES DRIVEN BY B-185		MILES DRIVEN BY B-12	
1/1				
1/2			44	
1/3	44			
1/4	34		112	
1/5	243			
1/7				
1/8				
1/9				
1/10				
1/11	257			
1/14	32		77	
1/15	18			
1/16	48		68	
1/17	42			
1/18	33		44	
1/21			45	
1/22	33		77	
1/23	45		87	
1/24	42			
1/25	32		65	
1/26	41			
1/28	30		133	
1/29	32			
1/30			23	
1/31	40			
DAYS	**1046**		**775**	

Total Miles Driven By The Constable's Office **1821** **January 2013**

GILA COUNTY TREASURER'S RECEIPT
GILA COUNTY, ARIZONA

DATE 2/1/13

GRANT # _____

DEPOSIT TO FUND Gila County Treasurer FUND # _____

REMITTING DEPT Payson Regional Constable's Office

SERVICE RENDERED Constables Ethics, Standards & Treasurers Board - Writ fees Collected

Account Code	Revenue Description	Amount	
TG1620601	CESTB - Writ fee Collected	10	00
	For January 2013		
	2 @ 5.00		
	Ck # 2313		
		10	00

Authorized Signature 3230 Title PRCO #324

SUMMARY OF DEPOSIT

Currency	
Coins	
Checks	
Total	

TREASURER By _____ Date _____

TREASURER 98356

PAYSON CONSTABLE
108 W. MAIN ST. 928-474-3844
PAYSON, AZ 85541

2313
91-527/1221 6128
0703680454

DATE 2/1/13

PAY TO THE ORDER OF Gila County Treasurer $ 10.00

Ten dollars & 00/100's DOLLARS

Security Features Details on Back

WELLS FARGO Wells Fargo Bank, N.A. Arizona wellsfargo.com

FOR Writ Fees - January 3230

⑈000002313⑈ ⑆122105278⑆ 0703680454⑈

GILA COUNTY TREASURER'S RECEIPT
GILA COUNTY, ARIZONA

DATE 2/1/13

GRANT # _____

DEPOSIT TO FUND Gila County Treasurer FUND # _____

REMITTING DEPT Payson Regional Constable's Office

SERVICE RENDERED Service fees collected - January 2013

Account Code	Revenue Description	Amount	
1005-324-3405.80	Service fees collected	1210	20
1005-01-32400-4614	1/1/13 thru 1/31/13		
		1210	20

Authorized Signature 3290 Title PRCO # 324

SUMMARY OF DEPOSIT

Currency	
Coins	
Checks	
Total	

TREASURER By _____ Date _____

TREASURER 98357

PAYSON CONSTABLE
108 W. MAIN ST. 928-474-3844
PAYSON, AZ 85541

2314
91-527/1221 6128
0703680454

DATE 2/1/13

PAY TO THE ORDER OF Gila County Treasuver $ 1210.20

One thousand two hundred ten & 20/100's DOLLARS

WELLS FARGO Wells Fargo Bank, N.A. Arizona wellsfargo.com

FOR Service Fees - January 5276

⑈000002314⑈ ⑆122105278⑆ 0703680454⑈

ARF-1691 **4- H**

Regular BOS Meeting

Meeting Date: 02/19/2013

Reporting Period:

Submitted By: Marian Sheppard, Chief Deputy Clerk, BOS, Clerk of the Board of Supervisors

---

Information

Subject

January 29, 2013, and February 5, 2013, BOS Meeting Minutes

Suggested Motion

Approval of the January 29, 2013, and February 5, 2013, BOS meeting minutes.

Attachments

1-29-13 BOS Meeting Minutes

2-5-13 BOS Meeting Minutes

BOARD OF SUPERVISORS MINUTES
GILA COUNTY, ARIZONA

Date: January 29, 2013

MICHAEL A. PASTOR
Chairman

TOMMIE C. MARTIN
Vice-Chairman

JOHN D. MARCANTI
Member

JOHN F. NELSON
Clerk of the Board

By: Marian Sheppard
Chief Deputy Clerk

Gila County Courthouse
Globe, Arizona

PRESENT: Michael A. Pastor, Chairman;, Tommie C. Martin, Vice-Chairman; John D. Marcanti, Supervisor; Don McDaniel, Jr., County Manager; John Nelson, Deputy County Manager/Clerk; Marian Sheppard, Chief Deputy Clerk; and Bryan Chambers, Deputy Attorney Principal.

Item 1 – Call to Order – Pledge of Allegiance

The Gila County Board of Supervisors met in a work session at 10:00 a.m. this date in the Board of Supervisors hearing room. Bryan Chambers led the Pledge of Allegiance.

Item 2 – REGULAR AGENDA ITEMS:

A. Information/Discussion regarding the proposal submitted by MAXTRAX to design, construct and manage an automobile racetrack facility for the Industrial Development Authority of the County of Gila, Arizona at the Gila County Fairgrounds.

Gerald (Gerry) Kohlbeck addressed this item on behalf of Fred Barcon, President of the Industrial Development Authority (IDA), who was unable to attend today's meeting. He informed the Board that Daisy Flores, counsel for the IDA, was present to address any questions or concerns of the Board of Supervisors. Mr. Kohlbeck advised that the purpose of this agenda item is to determine whether there is the possibility of establishing a long-term lease with Gila County for the use of a portion of the County Fairgrounds property to establish an automobile (car) racetrack. He explained that the lease with the County would be through the IDA and also through a non-profit organization, and back to the end user, which most likely would be MAXTRAX. Mr. Kohlbeck referred to a preliminary design of the proposed project of which he

provided a copy to each Board member. He advised that the most economical method to build this racetrack would be to build it upon the existing horse racetrack that is no longer being used and because the infrastructure is already in place. He then added that the other reason for addressing the Board today is to discuss with the Board if the County would like to participate by funding the concept phase of this project, either partially or fully, of which the estimated cost is $47,500. Mr. Kohlbeck asked John McGinley, Managing Partner of MAXTRAX, LLC, to address the Board.

Mr. McGinley provided an overview of his professional experience operating car racetracks and of the project. The intent of this project is to build a car racetrack of which regional and national events would be held and a racetrack that would make the community, County and its citizens proud. Mr. McGinley advised that a preliminary review of the previous study, which is a study that was completed in August 2002 by Tetra Tech, Inc. and is known as the Gila County Fairgrounds Master Plan, and design materials have been generated. MAXTRAX has extensive experience in design, funding and racetrack management. MAXTRAX is interested in working with the IDA to bring this project to fruition. As for the funding for this project, MAXTRAX is proposing a phased approach as outlined in the project proposal letter to the IDA (letter was not dated.) Phase I – Concept Development is estimated to cost $47,500 and it will take approximately 4-6 weeks to complete; Phase II – Racetrack Development is estimated to cost $80,000 and it is anticipated that it will take 3 weeks for the design and 5 months for construction; and Phase III – Operations – Base Fee will cost $40,000 for Mr. McGinley's salary and 5% to MAXTRAX of the gross revenue. Mr. McGinley stated that this proposed racetrack would provide an economic boost to the community because people who will be attending or participating in the races would stay in the community for 2-3 days at a time. He emphasized that there would be some safety features that would be incorporated into the design of this racetrack to which Globe would be known as an innovator of short track car racing. He advised that there are currently 7 buildings residing on the property which could be utilized, so only a grandstand and concession stands would have to be built. Mr. McGinley emphasized that if MAXTRAX is chosen to design, develop and operate this facility, MAXTRAX would ensure that the local community would be involved.

Daisy Flores stated that in reviewing this proposal with the IDA, the intent of today's meeting is to see whether the County is interested in going forward with this proposal or not. She advised that the IDA is looking at using the County Fairgrounds in a different way whereby the County would lease a portion of the Fairgrounds to a non-profit organization and the non-profit organization would obtain the funding and move forward to get a car racetrack established and then contract with a company such as MAXTRAX to run it.

Mr. McGinley advised that it is the intent of MAXTRAX to have an asphalt track versus a dirt track as it is more economical. He then answered all of the concerns of the Board members regarding mitigating dust, noise and lights.

Supervisor Marcanti expressed a concern as to the amount of money that has already been spent on the Master Plan; however, he did state that he is in favor of a car racetrack to improve the local area.

Vice-Chairman Martin advised that the proposed design places the car racetrack in to what she refers as the "hole," which is a lower portion, more of a canyon area at the Fairgrounds, and it is the current location of the go-cart racetrack. She feels today's conversation is about placing the car racetrack at the location of the former horse racetrack. Mr. McGinley replied that there are benefits to locating the car racetrack in the hole, but it doesn't matter which location is chosen. He added that if the car racetrack was placed in the hole, and in the future the state of Arizona once again allows horse racing to take place and it is reestablished in Globe, a bigger venue could be built. If horse racetrack racing is not reestablished, he believes it is more cost effective to build a car racetrack at the location of the horse racetrack. His approach is to try to find ways to utilize the money the County has already spent.

Chairman Pastor called upon the public for comments. A summary of the comments provided are as follows: Terry Wheeler, City of Globe Mayor and who lives to the west of the Fairgrounds, is in support of a car racetrack; however, he believes it would be best suited in the hole as opposed to building over the current location of the horse racetrack. He also believes that if this project is approved and moves forward, it should be under the purview of the Gila County Fair and Racing Commission and not Gila County. Janet Cline, Gila County Fair Committee Chairman, was in favor of a car racetrack when she was first approached about it; however, when she later learned that the car racetrack was going to be built at the current location of the horse racetrack, she became concerned. Her primary concerns are: 1) local community organizations such as the Lions Club, Globe Rotary, etc. which have their concession booths at the Fairgrounds; 2) the Fair Committee's current use of the grandstands and the infield, along with a contract in place for thousands of dollars for use of the grounds inside the horse racetrack; and 3) the proposal is about building an asphalt car racetrack and she is unsure if people would attend that type of race versus a race upon dirt. She then talked about the land being donated long ago and that the money generated from the horse races was used to build the Fairgrounds. She mentioned that over the years, the Fairgrounds are also utilized for the 4-H program and she is also concerned for all of the youth that use the Fairgrounds for various events/programs, such as the FFA (Future Farmers of America) program. Charles Brewer, Gila County

Rodeo Committee Chairman and who lives closest to the northern boundary of the horse racetrack, advised that he is former race car driver and he is not opposed to building a car racetrack in the hole; however, he has a concern for himself and that of his neighbors regarding the level of noise generated from car racing and also the lighting. William A. Byrne, a member of the IDA Board of Directors and of the Gila County Fair and Racing Commission, supports the car racetrack and he offered to work with MAXTRAX or any other organization that wants to promote a track; however, he does not support the car racetrack being built at the location of the horse racetrack as he believes it would not be in the best interests of the Fairgrounds. Sherron Lavin, Gila County Fair and Racing Commission Chairman, advised that she has served on committees/commissions for the Fairgrounds since the early 1970s and she feels strongly that because the Fairgrounds was built by the County and community, it needs to remain "whole." She stated that she supports a car racetrack 100%, but it needs to be located in the hole. Ms. Lavin added that she has been contacted by the Arizona Fair and Racing Commission to fill out a short questionnaire on whether Gila County would be interested in resuming horse racing should the state of Arizona allow it to resume. She emphasized that the Gila County Fair and Racing Commission fully intends to support the continuation of horse racing in the state as do many other Arizona counties that formerly held horse races. In viewing the proposed design, Ms. Lavin expressed a concern about the property taking over the area currently being used for the 4-H livestock barn and the shop area. She emphasized the importance of the need to define the exact area for the location of the proposed car racetrack so there is no infringement upon the land that is currently being used for the Fair, 4-H events, and other events for the youth. Dennis Gates, a local resident and a race car driver who has been racing since 1967, stated that it was his understanding that a dirt car racetrack was being considered, but he now understands it is going to be an asphalt car racetrack. He advised that in the past, he raced on asphalt tracks and if this track was built with asphalt he would need to buy a new car and purchase new tires every week he raced, whereas when he races on dirt tracks, his tires can last as long for 6-8 races or as long as 10-12 weeks.

At the conclusion of the public comments, Vice-Chairman Martin addressed the issue of the ownership of the land stating that Mr. and Mrs. Kendrick Holder did not give the land to the Fairgrounds, but rather they gave up a section of their grazing permit upon BLM (Bureau of Land Management) land. She asked Mitchell (Mick) Holder, who is the son of Mr. and Mrs. Kendrick Holder, to clarify this issue. Mitchell Holder stated, "That property was a state grazing lease with a 10-year turnover. It was in the early stages of the 10-year lease when Kendrick surrendered it after conversations with Bill Boice, Bill Bohme and other people with the idea that it would be used for building a (horse) racetrack and eventually the Fairgrounds. That's why he was so

incensed when they put the prison out there. That's not the agreement that was made and he voluntarily surrendered, and it wasn't just one section. He felt they violated the agreement they made. Time moves on and changes come about, and agriculture isn't as strong in our community as it was as is nothing else, but there's no reason to slap people, who went before us, in the face and change it to a single use just because it's currently popular. We all enjoy racing and always have in this community, but it doesn't need to abdicate those 4-H programs. Those buildings, the monies comes from various sources and I think you're going to run into a legal situation if you don't be real careful on where you're converting money that has been granted by several different sources and several different governmental entities and private money to a single use, especially held by an out of town lease holder. Even though technically he didn't give up fee land, he gave up the value...If he was here, he would be incensed again. Thank you."

Vice-Chairman Martin stated, "Having looked at the Fairgrounds Agreement with the state, it is my understanding that we can't give up the Fair part to do anything else. Whatever we're talking about here would be in addition to what we are already doing out there; otherwise, we are not allowed. They could jerk the (unfinished.) So, in my mind we're not talking either/or. We're talking about something that has to work with everything else (at the Fairgrounds)...The third thing is when you all talk about whatever it is the County does out there, they put a quarter of a million dollars into that Fairgrounds every year. Now I realize I'm not taking away one minute about what else people have done and built. Fair and racing has, in fact, the horse racing did begin to build that. I just have looked at our budget for the last 8 years and know how much money goes into that Fairgrounds, so we are talking a partnership here, whatever else we do. There's a substantial amount of money that the County puts into the Fairgrounds and I think we get a $10,000 return from all of the activities out there. One of the things I'm looking at it, if we can make this work, is there a way to have some activities out there that actually help pay the way? Okay? Pay the freight because those dollars are taxpayer dollars, they're not some other dollars. If there's some way to supplement that or even take it over, you bet I'm interested, but not to do it instead of what we do out there and not to do it in a way which negatively impacts what is going on out there, but a way to make this a win-win for everybody, particularly the County."

Mr. Byrne commented that he believes it is feasible to run the Fairgrounds more economically than as has been done in the past. He proposed expanding the Fairgrounds area so that it has a multi-functional purpose to include horse racing on the existing horse racetrack, and to build a car racetrack and other motor sports types of activities in the hole.

Mr. McGinley expressed his appreciation for all of today's comments and he reiterated that MAXTRAX wants to work in concert with those involved in running the Fairgrounds. He stated, "Having it (the car racetrack built) in the bottom of the hill is the best place; the only difference is the cost...If we can do it in the bottom of the hill and we can find the money; let's do it in the bottom of the hill." He stated that if the bottom of the hill (hole) was used for the car racetrack, it would require moving a lot of dirt and he suggested that maybe the local copper mines could help in that endeavor. Vice-Chairman Martin advised that it is her inclination to go with a dirt track. Mr. McGinley replied that if a dirt track would be built, it requires using tens of thousands of gallons of water each weekend, plus the cost of diesel fuel to run the water trucks. Vice-Chairman Martin added that there may be an opportunity for the mines to move the dirt as possibly a part of one of its employee training programs.

Supervisor Marcanti advised that it was the Board of Supervisors that approved the expenditure to create the Master Plan and that some of the recommendations have been implemented, such as the RV park. He reiterated the need to carefully review the Master Plan before moving forward as it addresses some of the issues which were raised today such as the design of the Fairgrounds; drawings and drainage.

Chairman Pastor stated that he has participated in discussions with Fred Barcon, IDA President, on this issue over the past 1½ years; he previously served on the IDA Board; he has talked with Mr. Gates many times on this same issue over the last 5-6 years since they first met; and he has also talked about a car racetrack to many other local racers and citizens over the years. He stated, "There's no doubt in my mind that a (car) racetrack is a good economic driver for the community. I, too, have trouble with it being on top." He then asked Steve Stratton, Public Works Division Director, to address the Master Plan drawing on the overhead screen. Mr. Stratton reviewed the Master Plan that was previously adopted by the Board of Supervisors. He stated that several items contained within the Master Plan have been built, such as the RV park and roping arena. Mr. Stratton stated that a grant was awarded to the County to build the RV park, and as part of that agreement the County must operate it for 20 years.

At the conclusion of the discussion Chairman Pastor reiterated that building a car racetrack is a good idea, but not at the current location of the horse racetrack. He commented that local racers are not excited to have an asphalt track, so there needs to be future discussions between local citizens and MAXTRAX. He stated that he would like for the Board the Supervisors to encourage the IDA to look at all options and to include conversations with the Gila County Fair and Racing Commission and County staff. He also advised that a future discussion should take place during a Board work session.

B. Information/Discussion on a draft Curfew Ordinance for future Board of Supervisors approval.

John Nelson, Deputy County Manager/Clerk, advised that the issue of adopting a curfew ordinance for any person under the age of 18 was brought to his attention on May 21, 2012, by Sherry Rice. Ms. Rice attended a Town Hall meeting regarding underage drinking and her opinion after attending that meeting was that there is a lot of community support for a curfew ordinance to be adopted for unincorporated areas within Gila County that would be similar to ordinances that are in place at the City of Globe and the Town of Payson. The curfew would be from 10 p.m. to 6 a.m. seven days a week. Mr. Nelson noted that he previously requested that the Chief Deputy Clerk of the Board survey other counties and it was discovered that 6 other Arizona counties have similar types of ordinances in place. As a result of that survey, a draft curfew ordinance has been created for the Board's review. Mr. Nelson mentioned that other curfew ordinances which have been reviewed are very punishment-oriented and that this proposed ordinance includes a leaner approach as far as consequences for not complying with the curfew. The proposed penalties for non-compliance are as follows: 1st offense - perform not more than 10 hours of community service; 2nd offense – perform not more than 20 hours of community service and pay a fine not to exceed $100; 3rd offense – perform not more than 20 hours of community service and pay a fine not to exceed more than $300; and 4) an adult found in violation of the ordinance shall be guilty of a petty offense punishable by a fine of not more than $300. Mr. Nelson advised that the Sheriff did not have an opportunity to review this draft ordinance; however, he did speak with the Sheriff. The Sheriff did seem supportive of the ordinance for his deputies to use it as a tool to get minors off the streets when they should be home.

Vice-Chairman Martin commented that she didn't like the idea of taking over parents' responsibilities; however, she said if there was none in place for some minors, this may be an option to "parent otherwise." She agreed with the leaner approach of performing community service.

Supervisor Marcanti stated that he is totally against this proposed ordinance. He referred to a 9:30 p.m. curfew that was put in place by the City of Globe in the 1960s and he feels this responsibility should be with the cities and towns, not the County as there are enough rules and regulations already in place. His biggest concern if the ordinance were to be adopted is to determine the agency that would be responsible for enforcing the ordinance.

Ms. Rice stated that she became aware that there is a big problem in Gila County with minors drinking and taking illegal drugs, especially during the

weekends. Her intent for proposing this ordinance is to give "some teeth" to the Sheriff's deputies because at present a deputy cannot do more than ask for a minor's identification and ask what they are doing. She is hoping this ordinance can help the deputies, among other things. She would like the penalties to be more stringent because the agencies that participate in providing community service need to receive a benefit and it should serve a purpose for both the providing agency and the offender. She recommended 20 hours of community service for the first offense. Ms. Rice mentioned that she also spoke to Mr. Nelson about adding addressing emergency medical in the ordinance. She stated, "Gila County leads in so many things we don't want, such as teen pregnancy. Please take a hard look, especially those who are leaning against it."

Chairman Pastor advised that Ms. Rice submitted 35 letters in support of this proposed ordinance and he asked the Chief Deputy Clerk of the Board to circulate them after the meeting to Board members to which she agreed. Mr. Nelson offered to circulate the proposed ordinance to the elected officials and the public and then present those comments/suggestions to the Board of Supervisors at a future Board meeting. Don McDaniel, County Manager, stated that plan of action would be taken as suggested by Mr. Nelson unless the Board objected, of which there was no objection given by any Board member.

C. Information/Discussion regarding the proposed revisions made to the Gila County Merit System Rules and Policies handbook.

Berthan DeNero, Human Resources (H.R.) Director, provided a history of the actions taken to date with regard to updating the Gila County Merit System Rules and Policies handbook, which was last revised in 2002. Approximately 1 to 1½ years ago the H.R. staff began reviewing the handbook. It was also reviewed by a representative of the Arizona Counties Insurance Pool of which Gila County is a member. The H.R. staff also researched various professional H.R. association websites and Arizona laws, and had conversations with other Arizona counties' H.R. directors about rules and policies. The handbook was then revised and presented to the Gila County Administration Team, Management Team and it was reviewed one-on-one with the elected officials who were in office at that time. It has not yet been presented to the newly elected officials. Ms. DeNero stated that Bryan Chambers, Deputy Attorney Principal, was a significant contributor in this endeavor as he provided more than 70 comments of which 95% were incorporated into the revised handbook. These proposed revisions were presented to the Board of Supervisors about a year ago, and Ms. DeNero advised that there has been only one major change made since that time. The major change is to Rule 9 – Computing and Communication Technology Use and Ethics as that section has been

completely deleted from the handbook, and a new policy with accompanying procedures has been drafted as part of the Countywide Policy Manual. That proposed policy has not yet been presented to the Board of Supervisors for review and approval. Vice-Chairman Martin advised that she would like more time to review the revisions and the general consensus was that would be a good idea. Chairman Pastor directed the County Manager to coordinate with Ms. DeNero in scheduling some work sessions with other elected officials and to also schedule departmental employee meetings in order to obtain as much input as possible because this handbook affects all County employees and public officials. Chairman Pastor commented to Joe Heatherly, Finance Director, that this same process should take place with his proposed policy that is listed as agenda item 2D (following this item.)

D. Information/Discussion on a Travel and Related Expenses Policy for inclusion in the Countywide Policy Manual.

Mr. McDaniel advised that this is one more policy being proposed to be added to the Countywide Policy Manual of which there are currently 13-14 adopted policies. He stated that this proposed policy has generated a lot of discussion and there may be more work to be done on it, but it was felt that this would be a good time to present it to the Board in a work session so it can be further discussed.

Mr. Heatherly agreed that it is imperative that all proposed policies are carefully reviewed and he stated "We need to take the time to do it right." He stated that if countywide policies adopted by the Board of Supervisors were to be researched, this policy would probably not be found as Board adopted policy. He assumes that someone from the Finance Department or the H.R. Department established this countywide policy on March 16, 1999; however, it appears it did not go before the Board of Supervisors to be officially adopted and it is due for an "overhaul." He believes there are a lot of good procedures outlined in the current policy; however, he has learned that many County departments and elected offices have their own policies and procedures for travel and related expenses. His goal is to have consistency throughout the County in order to meet the approval of the auditors. He stated, "The only thing we are consistent is that we are inconsistent, so that is one of the things the auditors write us up about." Mr. Heatherly advised that he formed a task force about 1½ years ago comprised of Kendall Rhyne, Chief Probation Officer; Daisy Flores, County Attorney; Michael O'Driscoll, Health and Emergency Services Director; and himself. They met once a month for six months. Travel policies and procedures for Pima, Pinal and Yuma Counties were also reviewed. The major areas addressed in writing this policy were: 1) authorization or pre-approval of travel; 2) defining "travel"; 3) when paying for meals would be applicable; 4) the allowance for meals; 5) use of personal vehicles for travel; 6)

County credit cards; and 7) cash advances. Mr. Heatherly then proceeded to review all of the proposed changes for the above listed areas. He answered specific questions and concerns of Board members. Vice-Chairman Martin stated that she would like the elected officials to have an opportunity to review this proposed policy. Mr. McDaniel replied that this policy is now ready to be discussed with elected officials and others, so he will proceed in scheduling meetings.

Item 3 – CALL TO THE PUBLIC: Call to the Public is held for public benefit to allow individuals to address issue(s) within the Board's jurisdiction. Board members may not discuss items that are not specifically identified on the agenda. Therefore, pursuant to Arizona Revised Statute §38-431.01(H), action taken as a result of public comment will be limited to responding to criticism made by those who have addressed the Board of Supervisors, may ask staff to review the matter or may ask that a matter be put on a future agenda for further discussion and decision at a future date.

There were no requests to speak from the public.

There being no further business to come before the Board of Supervisors, Chairman Martin adjourned the meeting at 12:08 p.m.

APPROVED:

_____

Michael A. Pastor, Chairman

ATTEST:

_____

Marian Sheppard, Chief Deputy Clerk

BOARD OF SUPERVISORS MINUTES
GILA COUNTY, ARIZONA

Date: February 5, 2013

MICHAEL A. PASTOR
Chairman

TOMMIE C. MARTIN
Vice-Chairman

JOHN D. MARCANTI
Member

JOHN F. NELSON
Clerk of the Board

By: Marian Sheppard
Chief Deputy Clerk

Gila County Courthouse
Globe, Arizona

PRESENT: Michael A. Pastor, Chairman;, Tommie C. Martin, Vice-Chairman (via ITV); John D. Marcanti, Supervisor; Don McDaniel, Jr., County Manager; Marian Sheppard, Chief Deputy Clerk; and Bryan Chambers, Deputy Attorney Principal.

Item 1 – Call to Order – Pledge of Allegiance – Invocation

The Gila County Board of Supervisors met in a regular session at 10:00 a.m. this date in the Board of Supervisors hearing room. Linda Eastlick led the Pledge of Allegiance and Reverent James Knight of the Church of the Nazarene (Globe) delivered the invocation.

Item 2 - PRESENTATIONS:

A. Public recognition of 3 employees for January's "Spotlight on Employees" Program, as follows: Antoinette Gonzales, Kenneth Payne Jr. and Ernest Davis.

Angelo Cutter, Human Resources Department Deputy Director, read aloud 2 nomination letters for the 3 selected employees and then presented gift cards to each of them. On behalf of the Board of Supervisors, Chairman Pastor thanked the employees for their dedicated work.

Item 3 – REGULAR AGENDA ITEMS:

A. Information/Discussion/Action to prioritize road improvement projects on roads within federal lands, and authorize the Public Works Department to submit one or more projects to the Central Federal Lands Highway Division (CFLHD) in the "Arizona Call For Projects" that will be due by

February 28, 2013, and further prioritize projects for future submittal for consideration under the Secure Rural Schools and Community Self Determination Act, Title II grant funding cycle for 2013.

Steve Sanders, Public Works Division Deputy Director; Jacque Griffin, Assistant County Manager/Librarian; and Steve Stratton, Public Works Division Director, provided information on this agenda item. Various sections of the staff report accurately provide the information that was presented, as follows:

Background Information - The Central Federal Lands Highway Division (CFLHD) operates as part of the Federal Highway Administration (FHWA), serving the needs of all central states. In past years, this Division administered a number of highway programs, including the Forest Highway Program. When the Safe, Accountable, Flexible Efficient Transportation Equity Act (SAFETEA-LU – public law 109-59) expired Congress adopted a new transportation bill titled Moving Ahead for Progress in the 21st Century (MAP-21). The Map-21 Transportation Program is an opportunity for Arizona to shape a new program and provide focus for the state and local needs with regard to access on federal lands. With the adoption of MAP-21 the existing Forest Highway Program (along with other programs) became part of a new program titled Federal Lands Access Program. In past years, counties were not eligible to recommend projects directly into the Forest Highway Program, but rather gave input to other agencies for their recommendations. We currently have a project that was in the Forest Highway Program that has been moved into the Federal Lands Access Program. One of the major differences in the two programs is that the Forest Highway Program did not require a local match. The Federal Lands Access Program requires a 5.7% local match. The CFLHD has opened the Arizona Call for Projects on the CFLHD website. This is an opportunity for state, county and local entities to obtain funding for a variety of transportation projects accessing the federal lands in the state of Arizona. Project applications are now being accepted to develop a robust 5-7 year program of transportation projects (estimated program availability for Arizona of around $14 million per year). This will be a highly competitive project process. The projects around the state will be included in this 5-7 year cycle, so new projects likely will be scheduled 3-5 years into this process. The window for submitting projects for consideration will close on February 28, 2013. The Public Works Department is asking the Board to discuss and prioritize a number of local road projects that meet the criteria for this and other federal programs.

A second potential federal project funding opportunity was announced by the Department of Agriculture Secretary Tom Vilsak on January 15, 2013, regarding a one year reauthorization of the Secure Rural Schools and Community Self Determination Act for Fiscal Year (FY) 2013 - originally

authorized in 2000, reauthorized for 2008-2011, and renewed for FY2012. It is unclear at this time if this press release is referring to a new year of re-authorization, or if it is referring to the renewal for FY2012. Various contacts within the Apache-Sitgreaves National Forest were not able to clarify that question. However, if this press release is referring to a new, additional re-authorization, then the time frame for applying for funding for Title II projects will be very short, particularly since the Resource Advisory Committee that was created to help the Forest Service in prioritizing projects for funding, was disbanded after the last grant cycle.

Since most of the federal forest roads that Gila County holds easements qualify for both of these programs. Public Works is asking for one prioritized list of projects that could be used for submittal to both of these programs.

Evaluation - Federal funding for road projects in past years has been very important to Gila County in past years. In 2008 Gila County received federal funding through the Public Lands Discretionary Fund in the amount of $674K for paving the Young Road. In 2009 Gila County received $2.96 million through SAFETEA-LU for the design of a bridge over Tonto Creek. In 2011 the Tonto National Forest successfully applied on behalf of Gila County to the Forest Highway Program for bridges on the Houston Mesa Road at 2nd and 3rd crossing over the East Verde River. Since that time the Forest Highway Program has become part of the Public Lands Access Program. The Federal Lands Access Program requires a 5.7% local match, should the County choose to move forward with the project an agreement will be needed with CLFHD for the match.

With regard to Secure Rural Schools Title II funding, in 2009 we secured a Title II grant in the amount of $631,119 that assisted with paving a portion of Forest Road 512 (Young Road). We chip sealed 4.5 miles of Forest Road 423 (Cline Boulevard) with 2010 funding, and are scheduled to chip seal 3.9 miles of Forest Road 55 (Russell Road) with the 2011 funding. We will be improving the surface of the 13.5 unpaved miles of FR512 with our 2012 grant funding. The combined amount of funding from 2010-2012 is in excess of $780,000.

Currently the Public Works Department has identified four road projects that would meet the qualifications for future projects, either under the CFL Program or the Secure Rural Schools Title II Grant Process. They are in no particular order:

- Extension of pavement on Colcord Road
- Extension of pavement on Control Road
- Extension of pavement on FR 512

• Bridging of Oak Creek (FR 423 in Tonto Basin)

In addition, we would like to ask for input from the Board of Supervisors regarding other potential projects for consideration and possible prioritization that could qualify for these federal programs.

Conclusion - Federal forest land comprises the largest portion of Gila County, and many of the roads that our residents and visitors use are contained within these lands. Submitting projects for consideration for federal programs helps ensure that these forest roads are benefiting from road improvement projects. Prioritizing these road projects assists the Public Works Department with identifying which projects to submit, and ensures that the projects are submitted in a timely manner.

Recommendation - Staff recommends that the Board of Supervisors review thefour projects, as well as make suggestions and discuss other projects that are on the forest roads that the County holds easements on, to ensure all roads are considered, identify the Board's priorities with regard to these projects, and authorizes the Public Works Department to submit one or more projects to the Central Federal Lands Highway Division, "Arizona Call for Projects" that is due by February 28, 2013. Further priorities will be considered and recommended for future federal funding opportunities as they become available.

In concluding the presentation, Mr. Stratton thanked Ms. Griffin and Mr. Sanders for their efforts in working with the staff of CFLHD and the Resource Advisory Committee. He stated, "We worded carefully 'extension of pavement' as we don't know the amount of available money...If it's a great deal, we can do more miles of road."

Vice-Chairman Martin commented that it appears that a lot of work went into presenting the Board with the 4 most important proposed projects. Chairman Pastor agreed with the choices of these projects.

The Board discussed the proposed motion to be made and it was agreed that the motion would be as stated on this agenda item and that Public Works in consultation with the County Manager be given the authority to prioritize projects as funding becomes available.

Supervisor Marcanti made a motion to choose the 4 proposed projects as presented and to allow Public Works in consultation with the County Manager to prioritize these projects as funding becomes available, which was seconded by Vice-Chairman Martin and unanimously approved by the Board.

B. Information/Discussion/Action to approve an Intergovernmental Agreement (Economic Development Grant) between Gila County and the Town of Miami, whereby the County will disburse up to $25,000 to the Town of Miami as approved by the Board of Supervisors at its meeting of November 13, 2012, for furtherance of the Town of Miami's Cobre Valley Community Transit System's Dial-A-Ride Program.

Mr. McDaniel advised that the Board awarded this grant to the Town of Miami on November 13, 2012; however, at that time an Intergovernmental Agreement (IGA) had not been prepared for the Board's approval and authorization given for the Chairman to sign the IGA. This agenda item is for the Board to authorize the Chairman's signature on the IGA, which would allow the release of the funding to the Town of Miami. Upon motion by Vice-Chairman Martin, seconded by Supervisor Marcanti, the Board unanimously approved the IGA.

C. Information/Discussion/Action to approve Amendment F to the Copper Mountain Inn, Inc. Lease Agreement whereby the County leases office space at 1100 Monroe Street, Globe, Arizona, in the monthly amount of $13,394.16.

Mr. Stratton advised that this office space is rented by the County for use by the Probation Department and it has been several years since the rent was last increased. The current yearly cost to rent this office space is $146,118.12 and with an increase of $15,611 per year, the total yearly cost will now be $160,729.92. He advised that the ultimate goal of the County is to not rent any office space. Mr. Stratton further advised that he and County Manager Don McDaniel will be meeting tomorrow with the elected officials regarding office space. Upon motion by Supervisor Marcanti, seconded by Vice-Chairman Martin, the Board unanimously approved Amendment F to the Lease Agreement with Copper Mountain Inn, Inc.

D. Information/Discussion/Action to table this item indefinitely until Public Works has completed a final draft, at which time Policy No. DPW 12-01 - Storm/Fire/Flood Event Stipend shall be placed on a Board meeting agenda for consideration and action.

Mr. Stratton advised that due to conflicting schedules of other County personnel, there hasn't been enough time to finalize this policy, so he requested that the Board table this agenda to allow more time to present the Board with a final draft of the proposed policy in the future. Upon motion by Vice-Chairman Martin, seconded by Supervisor Marcanti, the Board unanimously tabled this item.

E. Information/Discussion/Action to approve the Boards, Commissions and Committees Policy (BOS-COB-002) and the Community Agency and Economic Development Funding Policy (BOS-FIN-016) to be included in the Countywide Policy Manual.

Mr. McDaniel advised that the Board of Supervisors (BOS) has officially adopted 15 countywide policies and, if approved, these two policies will be included in the Countywide Policy Manual. He added that a table of contents for the Manual has also been included with this agenda item. Mr. McDaniel stated that on June 19, 2012, the BOS reviewed these proposed policies during a work session. He then explained the process leading up to the creation of Boards, Commissions and Committees (BCCs) policy, which also includes a Staff Liaison's Handbook. He explained that approximately 2½ years ago staff began compiling information on all BCCs that were established by the BOS. To date there are 38 BCCs. Responsibility was given to Marian Sheppard, Chief Deputy Clerk of the BOS, to coordinate the oversight of all BCCs with the Staff Liaisons. The County Manager designated all County division/department heads as a Staff Liaison for those BCCs under the purview of their division/department. He emphasized the importance of tracking these BCCs to ensure their compliance with the Open Meeting Law and other laws and bylaws because ultimately the responsibility for compliance falls upon the BOS. Vice-Chairman Martin commented that once this policy is adopted by the BOS, she wants assurance that all BCCs are treated the same as far as consistency. She suggested scheduling a work session in the future to review the BCCs to which Mr. McDaniel agreed that would be a good idea. Upon motion by Supervisor Marcanti, seconded by Vice-Chairman Martin, the BOS unanimously approved Boards, Commissions and Committees Policy No. BOS-COB-002.

Mr. McDaniel then provided information on Economic Development Funding Policy No. BOS-FIN-016. The purpose of this policy is to clarify the whole area of providing funds to various community agencies, cities and towns of which there are currently 39 agencies. He stated, "This again provides some consistency in the way they are handled." He further advised that the community agency must be qualified as 501(3)(C) agency and that before any funds are released to any qualified agency, an Intergovernmental Agreement must be executed by Gila County and the agency. Upon motion by Supervisor Marcanti, seconded by Vice-Chairman Martin, the Board unanimously approved Economic Development Funding Policy No. BOS-FIN-016.

Item 4 – CONSENT AGENDA ACTION ITEMS:

A. Approval of Amendment No. 9 to an Intergovernmental Agreement (Contract No. DE111006001) between the Arizona Department of Economic Security and the Gila County Board of Supervisors decreasing

the Contract amount from $8,699,003 to $8,549,003 due to the Gila-Pinal Workforce Investment Area's transfer of Dislocated Worker FY12 Program funds to the Tribal Entities' Adult Programs.

B. Approval of an Intergovernmental Agreement for Election Services between Gila County and the Town of Hayden.

C. Acceptance of the FFY2012 Emergency Management Performance Grant (EMPG) Grant Award No. EMW-2012-EP-00003 from the Arizona Division of Emergency Management in the amount of $113,783 for the performance period of October 1, 2011, through June 30, 2013, replacing FFY2011 Grant Award No. EMW-2011-EP-00006.

D. Approval to re-appoint Peter Havens to the Gila County Building Advisory and Appeals Board for an additional four (4) years, from January 1, 2013, to December 31, 2016.

E. Approval to re-appoint Tommie C. Martin to the Coalition of Arizona/New Mexico Counties for 2013.

F. Approval of the following precinct committeemen appointments as submitted by the Gila County Democratic Committee: Globe #1 Precinct - Leonard L. Leverance and Payson #3 Precinct - Vicki S. Shulman.

G. Approval of a request submitted by the Sheriff's Reserve Posse to waive fees for the use of the Gila County Fairgrounds Exhibit Hall for its Sweetheart Dance to be held on February 9, 2013.

H. Approval of a request submitted by the Gila County CowBelles on behalf of the Arizona State CowBelles to waive fees for the use of the Gila County Fairgrounds for a fund raising event entitled "An Evening with Baxter Black" on April 13, 2013.

I. Approval of a Special Event Liquor License Application submitted by the Gila County Rodeo Committee to serve liquor at a special event entitled "An Evening with Baxter Black" on April 13, 2013.

J. Approval of the December 2012 monthly activity report submitted by the Globe Regional Justice Court.

K. Approval of the December 2012 monthly activity report submitted by the Payson Regional Justice Court.

L. Approval of the December 2012 monthly activity report submitted by the Clerk of the Superior Court.

M. Approval of the January 22, 2013, BOS meeting minutes.

N. Acknowledgment of the Human Resources reports for the weeks of January 1, 2013, January 8, 2013, January 15, 2013, January 22, 2013, and January 29, 2013.

O. Acknowledgment of contracts under $50,000 which have been approved by the County Manager for the weeks of December 31, 2012, to January 4, 2013; and January 7, 2013, to January 11, 2013.

P. Approval of finance reports/demands/transfers for the weeks of January 29, 2013, and February 5, 2013.

January 29, 2013

$503,577.80 was disbursed for County expenses by check numbers 251910 through 252023.

February 5, 2013

$1,634,919.65 was disbursed for County expenses by check numbers 252024 through 252146. **(An itemized list of disbursements is permanently on file in the Board of Supervisors' Office.)**

Upon motion by Vice-Chairman Martin, seconded by Supervisor Marcanti, the Board unanimously approved Consent Agenda action items 4A through 4P.

Item 5 – CALL TO THE PUBLIC: Call to the Public is held for public benefit to allow individuals to address issue(s) within the Board's jurisdiction. Board members may not discuss items that are not specifically identified on the agenda. Therefore, pursuant to Arizona Revised Statute §38-431.01(H), action taken as a result of public comment will be limited to responding to criticism made by those who have addressed the Board of Supervisors, may ask staff to review the matter or may ask that a matter be put on a future agenda for further discussion and decision at a future date.

There were no requests to speak from the public.

Item 6 - At any time during this meeting pursuant to A.R.S. §38-431.02(K), members of the Board of Supervisors and the Chief

Administrator may present a brief summary of current events. No action may be taken on issues presented.

Each Board member and the County Manager presented a summary of current events.

There being no further business to come before the Board of Supervisors, Chairman Martin adjourned the meeting at 11:04 a.m.

APPROVED:

_____

Michael A. Pastor, Chairman

ATTEST:

_____

Marian Sheppard, Chief Deputy Clerk

ARF-1677 **4- I**

Regular BOS Meeting

Meeting Date: 02/19/2013

Reporting Period: Report for County Manager Approved Contracts Under $50,000 for Weeks Ending 01-18-13 and 01-25-13

Submitted For: Joseph Heatherly, Finance Director **Submitted By:** Dana Sgroi, Contracts Support Specialist, Finance Department

---

Information

Subject

Report for County Manager Approved Contracts Under $50,000 for Weeks Ending 01-18-13 and 01-25-13

Suggested Motion

Acknowledgment of contracts under $50,000 which have been approved by the County Manager for the weeks of January 14, 2013, to January 18, 2013; and January 21, 2013, to January 25, 2013.

Attachments

County Manager Approved Contracts Under $50,000 for Weeks Ending 01-18-13 and 01-25-13

Service Agreement No. 011613 with Rodriguez Construction

Amendment No. 2 to Contract No. 012412 with Earthquest Plumbing

Service Agreement No. 011013 with Noble Building

Service Agreement No. 011113 with Rodriguez Construction

Amendment No. 3 to Contract 100109-10R with Swire Coca Cola

Service Agreement No. 010413 with Field Lining

Service Agreement No. 011013-1 with High Country Drywall LLC

Appendix A and B with Sentinel Technologies

Service Agreement No. 011713-1 with MLV Flooring LLC

Service Agreement No. 011513-2 with Pointe Companies Inc.

Service Agreement No. 011513-3 with Pointe Companies Inc.

Service Agreement No. 011513-4 with Pointe Companies Inc.

Service Agreement No. 011713 with Noble Building LLC

COUNTY MANAGER APPROVED CONTRACTS UNDER $50,000

January 14, 2013, to January 18, 2013

Number / Vendor	Title	Amount	Term	Approved	Renewal Option	Summary
Service Agreement No. 011613 with Rodriguez Construction	Service Agreement No. 011613 Weatherization Project No. HH#6279	$9,864.38	01-16-13 to 03-16-13	01-16-13	Expires	This weatherization project is necessary to reduce the energy burden and use for the homeowners. The goal is to provide sufficient heating and cooling to be cost effective.
Amendment No. 2 to Contract No. 012412 with Earthquest Plumbing	Amendment No. 2 Gila County Professional Service Contract No. 012412 Southern Gila County Backflow Testing and Repairs	$1,358.33	01-16-13 to 01-31-13	01-16-13	Expires	Amendment No. 2 to the original contract was issued to increase the contract amount by $1,358.33 to perform an emergency repair and/or replacement of two backflows that froze and broke at the Globe shop.
Service Agreement No. 011013 with Noble Building LLC	Service Agreement No. 011013 Weatherization Project No. HH#152-12-03	$47,385.66	01-16-13 to 03-16-13	01-16-13	Expires	This weatherization project is necessary to abate, encapsulate or remove the existing lead that is present in the home. There are health and safety issues concerning the electrical on the home. The roof is leaking and causing problems with the walls. The roof replacement is included in this cost.
Service Agreement No. 011113 with Rodriguez Construction	Service Agreement No. 011113 Weatherization Project No. HH#9088	$6,469.72	01-16-13 to 03-16-13	01-16-13	Expires	This weatherization project is necessary to reduce the energy burden and use for the homeowners. The goal is to provide sufficient heating and cooling to be cost effective.
Amendment No. 3 to Contract No. 100109-10R with Swire Coca-Cola	Amendment No. 1 to Contract No. 100109-10R Automated Vending Machine Services with Swire Coca-Cola, USA	$0.00	01-12-13 to 01-11-14	01-16-13	Option to extend for one (1) one (1) year period	On January 12, 2010, Gila County entered into a contract with Swire Coca-Cola, whereby Swire Coca-Cola will provide vending machine services to Gila County facilities in Globe and Payson. Amendment No. 3 will extend the contract to January 11, 2014.

January 14, 2013, to January 18, 2013 (continued)

Number / Vendor	Title	Amount	Term	Approved	Renewal Option	Summary
Service Agreement No. 010413 with Field Lining Systems, Inc.	Service Agreement No. 010413 Field Lining Systems, Inc. Repair West Leachate Pond at Buckhead Mesa Landfill	Not to exceed $12,000.00	01-16-13 to 03-16-13	01-16-13	Expires	The West leachate pond at the Buckhead Mesa Landfill in Payson, AZ needs major repair work performed.

January 21, 2013, to January 25, 2013

Number / Vendor	Title	Amount	Term	Approved	Renewal Option	Summary
Service Agreement No. 011013-1 with High Country Drywall	Service Agreement No. 011013-1 High Country Drywall LLC Miscellaneous Drywall Repairs in Payson, Pine and Star Valley Areas	Not to exceed $2,000.00	01-23-13 to 01-22-14	01-23-13	Option to extend for two (2) one (1) year periods	Repair walls and repaint, where drywall has ben damaged over time. It would be less expensive to hire someone in Payson to do these minor repairs than it would be to send Globe workers on three different occasions to finish one job (have to wait for tape & texture to dry each time).
EPS060043-29-A4	Appendix A and B with Sentinel Technologies for Cisco SMARTnet renewal	$2,599.00	01-20-13 to 01-19-14	01-23-13	Expires	Maintenance Agreement for the County's Intrusion Protection System, which is a module in the firewall to protect against real time and Advanced persistent threats. It looks at anomalies and identifies at a packet and IP level threats and attempted hacks.
Service Agreement No. 011713-1 with MLV Flooring LLC	Service Agreement No. 011713-1 Replace carpeting in Payson CAP office	$858.92	01-23-13 to 03-22-13	01-23-13	Expires	Due to odor issues and excessive wear, the old carpet has been removed by County personnel. New padding and carpeting needs to be installed.

January 21, 2013, to January 25, 2013 (continued)

Service Agreement No. 011513-2 with Pointe Companies, Inc.	Service Agreement No. 011513-2 Weatherization Project No. HH#5924	$33,338.19	01-23-13 to 03-23-13	01-23-13	Expires	Sufficient heating and cooling would be cost effective. In order to do so, we have to reduce the infiltration and increase the insulation. REM report states that it would be cost effective to take these measures.
Service Agreement No. 011513-3 with Pointe Companies, Inc.	Service Agreement No. 011513-3 Weatherization Project No. HH#144-11-04	$30,823.65	01-23-13 to 03-23-13	01-23-13	Expires	Lead is present in this residence. An abatement and containment will need to be performed. The goal is to reduce the energy burden and use for the homeowners. Sufficient heating and cooling would be cost effective. In order to do so, we have to reduce the infiltration and increase the insulation. REM report states that it would be cost effective to take these measures
Service Agreement No. 011513-4 with Pointe Companies, Inc.	Service Agreement No. 011513-4 Weatherization Project No. HH#4398	$20,209.02	01-23-13 to 03-23-13	01-23-13	Expires	The goal is to reduce the energy burden and use for the homeowners. Sufficient heating and cooling would be cost effective. In order to do so, we have to reduce the infiltration and increase the insulation. REM report states that it would be cost effective to take these measures
Service Agreement No. 011713 with Noble Building LLC.	Service Agreement No. 011713 Weatherization Project No. HH#8279	$9,182.25	01-23-13 to 03-23-13	01-23-13	Expires	The goal is to reduce the energy burden and use for the homeowners. Sufficient heating and cooling would be cost effective. In order to do so, we have to reduce the infiltration and increase the insulation. REM report states that it would be cost effective to take these measures

Tommie C. Martin, District I
P.O. Box 2297 Payson, AZ. 85547
(928) 474-2029

Michael A. Pastor, District II
1400 E. Ash St. Globe, AZ. 85501
(928) 425-3231 Ext. 8753

John Marcanti, District III
1400 E. Ash St. Globe, AZ. 85501
(928) 425-3231 Ext. 8511

GILA COUNTY
www.gilacountyaz.gov

Don E. McDaniel Jr., County Manager
Phone (928) 425-3231 Ext.8761

Joseph T. Heatherly, Finance Director
Phone (928) 425-3231 Ext. 8743
Fax: (928)425-7056

1400 E. Ash Street
Globe, AZ 85501

SERVICE AGREEMENT NO. 011613

WEATHERIZATION PROJECT NO. HH#6279

THIS AGREEMENT, made and entered into this 16th day of January, **2013**, by and between Gila County, a political subdivision of the State of Arizona hereinafter designated the County, and **Rodriguez Construction, Inc.**, of the City of Globe, State of Arizona, hereinafter designated the Contractor.

WITNESSETH: The Contractor, for and in consideration of the sum to be paid him by the County, in the manner and at the time hereinafter provided, and of the other covenants and agreement's herein contained, hereby agrees, for himself, his heirs, administrators, successors, and assigns as follows:

ARTICLE 1 – SCOPE OF SERVICES: The Contractor shall provide for the services described in the scope of work below of Weatherization Project HH#6279, in a good and workmanlike and substantial manner and to the satisfaction of the County under the direction of the Housing Services Manager or designee.

All work performed by the Contractor shall be completed to local codes and regulation per Gila County and the State of Arizona and consistent with all Weatherization guidelines.

Scope of Work: Refer to attached Attachment "A" by mention made a binding part of this agreement as set forth herein.

Contractor Fee's: Refer to Attachment "A" by mention made a binding part of this agreement as set forth herein. Contractor will be paid fifty (50) percent upon presentation of an invoice at the beginning of the project, and the remaining fifty (50) percent upon presentation of an invoice upon completion of the project.

ARTICLE 2 – TERMINATION: The County reserves the right to terminate the Contract, in whole or in part at any time, when in the best interest of the County, without penalty or recourse. Upon receipt of the written notice, the Contractor shall stop all work as directed in the notice. If the contract is terminated, the County shall be liable only for the services rendered under this contract and accepted material received by the County before the effective date of termination.

ARTICLE 3 - INDEMNIFICATION: Contractor shall indemnify, defend, save and hold harmless the County of Gila and its officers, officials, agents, and employees (hereinafter referred to as "Indemnitee") from and against any and all claims, actions, liabilities, damages, losses, or expenses (including court costs, attorneys' fees, and costs of claim processing, investigation and litigation) (hereinafter referred to as "Claims") for bodily injury or personal injury (including death), or loss or damage to tangible or intangible property caused, or alleged to be caused, in whole or in part, by the negligent or willful acts or omissions of Contractor or any of its owners, officers, directors, agents, employees or subcontractors. This indemnity includes any claim or amount arising out of or recovered under the Workers' Compensation Law or arising out of the failure of such contractor to conform to any federal, state or local law, statute, ordinance, rule, regulation or court decree. It is the specific intention of the parties that the Indemnitee shall, in all instances, except for Claims arising solely from the negligent or willful acts or omissions of the Indemnitee, be indemnified by Contractor from and against any and all claims. It is agreed that Contractor will be responsible for primary loss investigation, defense and judgment costs where this indemnification is applicable. In consideration of the award of this contract, the Contractor agrees to waive all rights of subrogation against the County, its officers, officials, agents and employees for losses arising from the work performed by the Contractor for the County.

ARTICLE 4 – INSURANCE REQUIREMENTS: Contractor and subcontractors shall procure and maintain until all of their obligations have been discharged, including any warranty periods under this Contract are satisfied, insurance against claims for injury to persons or damage to property which may arise from or in connection with the performance of the work hereunder by the Contractor, his agents, representatives, employees or subcontractors.

The insurance requirements herein are minimum requirements for this Contract and in no way limit the indemnity covenants contained in this Contract. The County in no way warrants that the minimum limits contained herein are sufficient to protect the Contractor from liabilities that might arise out of the performance of the work under this contract by the Contractor, his agents, representatives, employees or subcontractors and Contractor is free to purchase additional insurance as may be determined necessary.

A. **MINIMUM SCOPE AND LIMITS OF INSURANCE:** Contractor shall provide coverage with limits of liability not less than those stated below.

1. **Commercial General Liability – Occurrence Form**
   Policy shall include bodily injury, property damage and broad form contractual liability coverage.
   - General Aggregate $2,000,000
   - Products – Completed Operations Aggregate $1,000,000
   - Personal and Advertising Injury $1,000,000
   - Each Occurrence $1,000,000

   a. The policy shall be endorsed to include the following additional insured language: **"The County of Gila shall be named as an additional insured with respect to liability arising out of the activities performed by, or on behalf of the Contractor".**

2. **Worker's Compensation and Employers' Liability**

Workers' Compensation	Statutory
Employers' Liability	
Each Accident	$100,000
Disease – Each Employee	$100,000
Disease – Policy Limit	$500,000

   a. Policy shall contain a **waiver of subrogation** against the County of Gila.

3. **Professional Liability (Errors and Omissions Liability)**

Each Claim	$1,000,000
Annual Aggregate	$2,000,000

   a. In the event that the professional liability insurance required by this Contract is written on a claims-made basis, Contractor warrants that any retroactive date under the policy shall precede the effective date of this Contract; and that either continuous coverage will be maintained or an

extended discovery period will be exercised for a period of two (2) years beginning at the time work under this Contract is completed.

B. **ADDITIONAL INSURANCE REQUIREMENTS:** The policies shall include, or be endorsed to include, the following provisions:

1. On insurance policies where the County of Gila is named as an additional insured, the County of Gila shall be an additional insured to the full limits of liability purchased by the Contractor even if those limits of liability are in excess of those required by this Contract.
2. The Contractor's insurance coverage shall be primary insurance and non-contributory with respect to all other available sources.
3. Coverage provided by the Contractor shall not be limited to the liability assumed under the indemnification provisions of this Contract.

C. **NOTICE OF CANCELLATION:** Each insurance policy required by the insurance provisions of this Contract shall provide the required coverage and shall not be suspended, voided, canceled, reduced in coverage or endorsed to lower limits except after thirty (30) days prior written notice has been given to the County. Such notice shall be sent directly to **Gila County Purchasing Department, Attention: Jeannie Sgroi, 1400 E. Ash St., Globe, AZ, 85501** and shall be sent by certified mail, return receipt requested.

D. **ACCEPTABILITY OF INSURERS:** Insurance is to be placed with insurers duly licensed or approved unlicensed companies in the state of Arizona and with an "A.M. Best" rating of not less than B+ VI. The County in no way warrants that the above-required minimum insurer rating is sufficient to protect the Contractor from potential insurer insolvency.

E. **VERIFICATION OF COVERAGE:** Contractor shall furnish the County with certificates of insurance (ACORD form or equivalent approved by the County) as required by this Contract. The certificates for each insurance policy are to be signed by a person authorized by that insurer to bind coverage on its behalf.

All certificates and endorsements are to be received and approved by the County before work commences. Each insurance policy required by this Contract must be in effect at or prior to commencement of work under this Contract and remain in effect for the duration of the project. Failure to maintain the insurance policies as required by this Contract or to provide evidence of renewal is a material breach of contract.

All certificates required by this Contract shall be sent directly to **Gila County Purchasing Department, Attention: Jeannie Sgroi, 1400 E. Ash St., Globe, AZ, 85501** or via email to Ms. Sgroi at dsgroi@co.gila.az.us. The County project/contract number and project description shall be noted on the certificate of insurance. The County reserves the right to require complete, certified copies of all insurance policies required by this Contract at any time.

F. **SUBCONTRACTORS:** Contractors' certificate(s) shall include all subcontractors as additional insured's under its policies **or** Contractor shall furnish to the County separate certificates and endorsements for each subcontractor. All coverage's for subcontractors shall be subject to the minimum requirements identified above.

G. **APPROVAL:** Any modification or variation from the insurance requirements in this Contract shall be made by the County Attorney, whose decision shall be final. Such action will not require a formal Contract amendment, but may be made by administrative action.

ARTICLE 5 – LEGAL ARIZONA WORKERS ACT COMPLIANCE: Contractor hereby warrants that it will at all times during the term of this Contract comply with all federal immigration laws applicable to Contractor's employment of its employees, and with the requirements of A.R.S. § 23-214 (A) (together the "State and Federal Immigration Laws"). Contractor shall further ensure that each subcontractor who performs any work for Contractor under this contract likewise complies with the State and Federal Immigration Laws. County shall have the right at any time to inspect the books and records of Contractor and any subcontractor in order to verify such party's compliance with the State and Federal Immigration Laws.

Any breach of Contractor's or any subcontractor's warranty of compliance with the State and Federal Immigration Laws, or of any other provision of this section, shall be deemed to be a material breach of this Contract subjecting Contractor to penalties up to and including suspension or termination of this Contract. If the breach is by a subcontractor, and the subcontract is suspended or terminated as a result, Contractor shall be required to take such steps as may be necessary to either self-perform the services that would have been provided under the subcontract or retain a replacement subcontractor as soon as possible so as not to delay project completion.

Contractor shall advise each subcontractor of County's rights, and the subcontractor's obligations, under this Article by including a provision in each subcontract substantially in the following form: "Subcontractor hereby warrants that it will at all times during the term of this contract comply with all federal immigration laws applicable to Subcontractor's employees, and with the requirements of A.R.S. § 23-214 (A). Subcontractor further agrees that County may inspect the Subcontractor's books and records to insure that Subcontractor is in compliance with these requirements. Any breach of this paragraph by Subcontractor will be deemed to be a material breach of this contract subjecting Subcontractor to penalties up to and including suspension or termination of this contract."

Any additional costs attributable directly or indirectly to remedial action under this Article shall be the responsibility of Contractor. In the event that remedial action under this Article results in delay to one or more tasks on the critical path of Contractor's approved construction or critical milestones schedule, such period of delay shall be deemed excusable delay for which Contractor shall be entitled to an extension of time, but not costs.

ARTICLE 6 – LAWS AND ORDINANCES: This agreement shall be enforced under the laws of the State of Arizona. Contractor shall maintain in current status all Federal, State and Local licenses and permits required for the operation of the business conducted by the Contractor. The Contractor shall comply with the applicable provisions of the Americans with Disabilities Act (Public Law 101-336, 42 U.S.C. 12101-12213) and applicable federal regulations under the Act.

ARTICLE 7– ANTI-TERRORISM WARRANTY: Pursuant to A.R.S. § 35-393.06(B) and 35-301.06(A) the Contractor certifies that it does not have scrutinized business operations in Iran or Sudan and that they are in compliance with the Export Administration Act and not on the Excluded Parties List.

ARTICLE 8 – CANCELLATION: This agreement is subject to cancellation pursuant to A.R.S. §38-511. If the Agreement is terminated, the county shall be liable only for payment for services rendered and accepted material received by the County before the effective date of termination.

ARTICLE 9 – RELATIONSHIP OF THE PARTIES: Contractor is an independent contractor of the County. Contractor represents that he has or will secure, at his own expense, all personnel required in performing the services under this contract. Such personnel shall not be employees of or have any contractual relationship with the County. All personnel engaged in work under this contract shall be fully qualified and shall be authorized or permitted under State and local law to perform such services. Contractor warrants that he has obtained or will obtain Worker's Compensation Insurance for his employees working on this contract and that any subcontractors will likewise obtain Worker's Compensation Insurance for of their employees working on this contract. It is further agreed by Contractor that he shall obey all state and federal statutes,

rules, and regulations which are applicable to provisions of the services called for herein. Neither Contractor nor any employee of the Contractor shall be deemed an officer, employee, or agent of the County.

ARTICLE 10 – NON-APPROPRIATIONS CLAUSE: Contractor acknowledges that the County is a governmental entity, and the contract validity is based upon the availability of public funding under its authority. In the event that public funds are unavailable and not appropriated for the performance of County's obligations under this contract, then this contract shall automatically expire without penalty to County after written notice to Contractor of the unavailability and non-appropriation of public funds. It is expressly agreed that the County shall only activate this non-appropriation provision as an emergency fiscal measure. The County shall not activate this non-appropriation provision for its convenience, to circumvent the requirements of this contract, or to enable the County to contract with another Contractor for the same supplies or services covered under this Addendum.

ARTICLE 11 – ENTIRE CONTRACT CLAUSE: The Contractor and the County have read this Contract and agree to be bound by all of its terms, and further agree that it constitutes the entire contract between the two parties and may only be modified by a written mutual contract signed by the parties. No oral agreement or oral provision outside this Contract shall have any force or effect.

ARTICLE 12 – NON-WAIVER OF ENFORCEABILITY: Failure of the County to enforce, at any time, any of the provisions of this Contract, or to request at any time performance by Contractor of any of the provisions hereof, shall in no way be construed to be a waiver of such provisions, nor in any way affect the validity of this contract or any part thereof, or the right of the County to enforce each and every provision

ARTICLE 13 – GOVERNING LAW: Both parties agree that this Contract shall be governed by the laws of the state of Arizona. The parties further agree that the jurisdiction for any legal disputes arising out of this Contract shall be the Superior Court of the State of Arizona. The parties agree that even if this Contract does not specifically reference any provision required by state or federal law, those state and federally required provisions are incorporated into this Contract by this reference as though they were specifically listed herein.

ARTICLE 14– TERM: Contract shall be effective date signed by the County Manager and expires 60 days thereafter.

ARTICLE 15 – PAYMENT/BILLING: Contractor shall be paid a flat fee of **$ 9,864.38** for completion of the projects as outlined in the Scope of Services.

All invoices shall be submitted to Gila County Accounts Payable, 1400 E. Ash St, Globe, Arizona and include the following information:

- Purchase Order Number
- Contract Number
- Invoice Number
- Service Location
- Vendor Name and Address
- Description of Service

Any alterations to the scope of work resulting in a change in cost must have prior written approval by the County. Any unauthorized work may result in non-payment to the vendor.

Gila County employs a "Net 15" payment term for services meaning the payment will be issued fifteen (15) days from the date the County receives the invoice from the Contractor. Purchase orders sent to the Contractor reflect these terms and conditions.

The Contractor shall have a current I.R.S. W-9 form on file with the County unless not required by law. The County shall not remit payment if the Contractor does not have a current W-9.

***IN WITNESS WHEREOF, Service Agreement No. 011613** has been duly executed by the parties hereinabove named, on the date and year first above written.*

GILA COUNTY

Don E. McDaniel, Jr., County Manager

Date: 1/16/13

RODRIGUEZ CONSTRUCTIONS, INC.

Art Rodriguez

GILA COUNTY COMMUNITY SERVICES DIVISION

Location: 5515 South Apache Ave., Globe, AZ 85501
PHONE: (928) 425-7631 FAX: (928) 425-9468
"Improving the Quality of Life for all Residents"

Gila County Community Action/Housing Services
Weatherization Program

BID RESULTS FORM

Quote Request Date: 1-14-13 Job Number: 6279

Name: Linda Carrillo

Address: 6206 S. Russell Space # 43

The following bids were received at the Gila County Housing Services Department, 5515 S. Apache Ave Suite 200, Globe, AZ 85501; at 1129 ☒am ☐pm. Bidding should be at least 72 hours from the time of the initial request.

NAME OF BIDDER:	VERBAL CONTACT	BID AMOUNT:
Mountain Retreat Builders		$ No bid
Noble Building		$ No bid
Rodriguez Construction		$
		$
		$
		$

Person opening bids: Nicholas Montoya Witness: Gabriel C Eglicio

Bidder Selected: Rodriguez Construction

Supervisor Sign-off Date 1/24/13

Housing Rehabilitation | Community Action | Section 8 Housing | GEST
Workforce Investment Act | REPAC | Weatherization Program

Reasonable accommodations for persons with disabilities may be requested.
Countywide TTY (928) 425-0839

832190

CUSTOMER'S ORDER NO.	DEPARTMENT	DATE

NAME Linda Carrillo HH# 6279

ADDRESS 6206 S. Russell Space #43

CITY, STATE, ZIP Globe Az 85501

SOLD BY	CASH	C.O.D.	CHARGE	ON. ACCT.	MDSE. RETD.	PAID OUT

	QUANTITY	DESCRIPTION	PRICE	AMOUNT
1	1-14-13	@1129 Mountain retreat said "No"		
2			NWM	
3	1-14-13	@1130 called Noble and Byron said "No"		
4			NWM	
5	1-8-13	Rodriguez sent in a bid of	$9,864.38	
6			NWM	
7				
8				
9				
10				
11				
12				
13				
14				
15				
16				
17				
18				

RECEIVED BY

A-3606
T-46320/43350

KEEP THIS SLIP FOR REFERENCE

RODRIGUEZ CONSTRUCTIONS INC.

01-08-13

TO: Gila County Housing – Weatherization Program
ATTN: Gabe Eylicio
5515 South Apache Avenue
Globe, AZ. 85501
RE: HH #6279

• Reduce infiltration to BAS level to 650 (reduction of 1550 cfm) =	$1050.00
• Has no ducting to seal	
• Install 280 sf of attic insulation to be installed to an R-38=	$ 420.00
• No belly repairs needed	$ 00.00
• Install 8 cfls	$ 00.00
• Does not qualify for heat pump W/H	$ 00.00
• Does not qualify for refrigerator	$ 00.00
• Three shade screens	$ 195.00
• LCNC	$ 250.00

Heat Pump HVAC System Install a new 1.5 ton 14 SEER heat pump system as specified to code. Install new duct work with supply to feed each room. Install new digital thermostat will be included along with registers, and main disconnect to code. New duct work will be sized to the home per ACCA Manual J, Residential Load. Electrical supply will be a dedicated circuit with a switch at the unit.

Total labor and material= $6,720.00

- Fix the settling at addition and rehang same door to open smoothly. The area to settle will be area beneath door to be rehung.

Total labor and material= $650.00

SUBTOTAL CONTRACT AMOUNT: $9285.00

6.24% sales tax: $579.38

Total contract amount: **$9,864.38**

Respectfully Submitted,

s/ Art J. Rodriguez

PO Box 13, Miami AZ 85539 * 547 S. East Street, Globe AZ 85501 * Phone: 928-425-7244* Fax: 928-425-5337
Info@rodriguez-az.com
RES/COMM. LIC. # ROC247373K42* RES. # ROC247371B* COMM. # ROC247372 B-01

AMENDMENT NO. 2

GILA COUNTY PROFESSIONAL SERVICE CONTRACT NO. 012412
SOUTHERN GILA COUNTY
BACKFLOW TESTING AND REPAIRS

Effective March 07, 2012, Gila County and Earthquest Plumbing, Inc. entered into an agreement whereby Earthquest Plumbing Inc. would perform the annual backflow testing at multiple county facilities in Globe, Arizona and repair and/or replace material as needed per county approval.

Amendment No. 1 to contract 012412 will increase the amount of the contract by a total of $2,000.00. The additional funds are necessary due to the amount of backflows that need to be retested and have repairs performed.

Amendment No. 2 to contract 012412 will increase the amount of the contract by a total of $1,358.33 to repair and/or replace backflows that froze and broke, per attached Earthquest Plumbing, Inc. Estimate #199.

SCOPE OF SERVICES:
Per attached Earthquest Plumbing, Inc. Estimate #199.

All other terms and conditions of the original agreement shall remain in full force and affect during the term of the contract.

IN WITNESS WHEREOF, two (2) identical counterparts of this amendment, each which shall include original signatures and for all purposes be deemed an original thereof, have been duly executed by the parties hereinabove named, on this 16TH day of JANUARY, 2013.

GILA COUNTY:

Don E. McDaniel Jr., County Manager

Date: 1/16/13

EARTHQUEST PLUMBING

Signature

Print Name

Tommie C. Martin, District I
P.O. Box 2297 Payson, AZ. 85547
(928) 474-2029

Michael A. Pastor, District II
1400 E. Ash St. Globe, AZ. 85501
(928) 425-3231 Ext. 8753

John Marcanti, District III
1400 E. Ash St. Globe, AZ. 85501
(928) 425-3231 Ext. 8511

GILA COUNTY
www.gilacountyaz.gov

Don E. McDaniel Jr., County Manager
Phone (928) 425-3231 Ext.8761

Joseph T. Heatherly, Finance Director
Phone (928) 425-3231 Ext. 8743

1400 E. Ash Street
Globe, AZ 85501

SERVICE AGREEMENT NO. 011013

WEATHERIZATION PROJECT NO. HH#152-12-03

THIS AGREEMENT, made and entered into this 16TH day of JANUARY, **2013,** by and between Gila County, a political subdivision of the State of Arizona hereinafter designated the County, and **Noble Building LLC**, of the City of Payson, State of Arizona, hereinafter designated the Contractor.

WITNESSETH: The Contractor, for and in consideration of the sum to be paid him by the County, in the manner and at the time hereinafter provided, and of the other covenants and agreement's herein contained, hereby agrees, for himself, his heirs, administrators, successors, and assigns as follows:

ARTICLE 1 – SCOPE OF SERVICES: The Contractor shall provide the services and products listed in the Scope of Work below for Weatherization Project HH#152-12-03, and shall do so in a good, workmanlike, and substantial manner and to the satisfaction of the County under the direction of the Housing Services Manager or designee.

All work performed by the Contractor shall be completed to local codes and regulation per Gila County and the State of Arizona and consistent with all Weatherization guidelines.

Scope of Work: Refer to attached Attachment "A" by mention made a binding part of this agreement as set forth herein.

Contractor Fee's: Refer to Attachment "A" by mention made a binding part of this agreement as set forth herein.

ARTICLE 2 – TERMINATION: The County reserves the right to terminate the Contract, in whole or in part at any time, when in the best interest of the County, without penalty or recourse. Upon receipt of the written notice, the Contractor shall stop all work as directed in the notice. If the contract is terminated, the County shall be liable only for the services rendered under this contract and accepted material received by the County before the effective date of termination.

ARTICLE 3 - INDEMNIFICATION: Contractor shall indemnify, defend, save and hold harmless the County of Gila and its officers, officials, agents, and employees (hereinafter referred to as "Indemnitee") from and against any and all claims, actions, liabilities, damages, losses, or expenses (including court costs, attorneys' fees, and costs of claim processing, investigation and litigation) (hereinafter referred to as

"Claims") for bodily injury or personal injury (including death), or loss or damage to tangible or intangible property caused, or alleged to be caused, in whole or in part, by the negligent or willful acts or omissions of Contractor or any of its owners, officers, directors, agents, employees or subcontractors. This indemnity includes any claim or amount arising out of or recovered under the Workers' Compensation Law or arising out of the failure of such contractor to conform to any federal, state or local law, statute, ordinance, rule, regulation or court decree. It is the specific intention of the parties that the Indemnitee shall, in all instances, except for Claims arising solely from the negligent or willful acts or omissions of the Indemnitee, be indemnified by Contractor from and against any and all claims. It is agreed that Contractor will be responsible for primary loss investigation, defense and judgment costs where this indemnification is applicable. In consideration of the award of this contract, the Contractor agrees to waive all rights of subrogation against the County, its officers, officials, agents and employees for losses arising from the work performed by the Contractor for the County.

ARTICLE 4 – INSURANCE REQUIREMENTS: Contractor and subcontractors shall procure and maintain until all of their obligations have been discharged, including any warranty periods under this Contract are satisfied, insurance against claims for injury to persons or damage to property which may arise from or in connection with the performance of the work hereunder by the Contractor, his agents, representatives, employees or subcontractors.

The insurance requirements herein are minimum requirements for this Contract and in no way limit the indemnity covenants contained in this Contract. The County in no way warrants that the minimum limits contained herein are sufficient to protect the Contractor from liabilities that might arise out of the performance of the work under this contract by the Contractor, his agents, representatives, employees or subcontractors and Contractor is free to purchase additional insurance as may be determined necessary.

A. **MINIMUM SCOPE AND LIMITS OF INSURANCE:** Contractor shall provide coverage with limits of liability not less than those stated below.

1. **Commercial General Liability – Occurrence Form**
   Policy shall include bodily injury, property damage and broad form contractual liability coverage.
   - General Aggregate $2,000,000
   - Products – Completed Operations Aggregate $1,000,000
   - Personal and Advertising Injury $1,000,000
   - Each Occurrence $1,000,000

   a. The policy shall be endorsed to include the following additional insured language: **"The County of Gila shall be named as an additional insured with respect to liability arising out of the activities performed by, or on behalf of the Contractor".**

2. **Worker's Compensation and Employers' Liability**

Workers' Compensation	Statutory
Employers' Liability	
Each Accident	$100,000
Disease – Each Employee	$100,000
Disease – Policy Limit	$500,000

   a. Policy shall contain a **waiver of subrogation** against the County of Gila.

3. **Professional Liability (Errors and Omissions Liability)**

Each Claim	$1,000,000
Annual Aggregate	$2,000,000

   a. In the event that the professional liability insurance required by this Contract is written on a claims-made basis, Contractor warrants that any retroactive date under the policy shall precede the effective date of this Contract; and that either continuous coverage will be

maintained or an extended discovery period will be exercised for a period of two (2) years beginning at the time work under this Contract is completed.

B. **ADDITIONAL INSURANCE REQUIREMENTS:** The policies shall include, or be endorsed to include, the following provisions:

1. On insurance policies where the County of Gila is named as an additional insured, the County of Gila shall be an additional insured to the full limits of liability purchased by the Contractor even if those limits of liability are in excess of those required by this Contract.
2. The Contractor's insurance coverage shall be primary insurance and non-contributory with respect to all other available sources.
3. Coverage provided by the Contractor shall not be limited to the liability assumed under the indemnification provisions of this Contract.

C. **NOTICE OF CANCELLATION:** Each insurance policy required by the insurance provisions of this Contract shall provide the required coverage and shall not be suspended, voided, canceled, reduced in coverage or endorsed to lower limits except after thirty (30) days prior written notice has been given to the County. Such notice shall be sent directly to **Gila County Purchasing Department, 1400 E. Ash St., Globe, AZ, 85501** or and shall be sent by certified mail, return receipt requested.

D. **ACCEPTABILITY OF INSURERS:** Insurance is to be placed with insurers duly licensed or approved unlicensed companies in the state of Arizona and with an "A.M. Best" rating of not less than B+ VI. The County in no way warrants that the above-required minimum insurer rating is sufficient to protect the Contractor from potential insurer insolvency.

E. **VERIFICATION OF COVERAGE:** Contractor shall furnish the County with certificates of insurance (ACORD form or equivalent approved by the County) as required by this Contract. The certificates for each insurance policy are to be signed by a person authorized by that insurer to bind coverage on its behalf.

All certificates and endorsements are to be received and approved by the County before work commences. Each insurance policy required by this Contract must be in effect at or prior to commencement of work under this Contract and remain in effect for the duration of the project. Failure to maintain the insurance policies as required by this Contract or to provide evidence of renewal is a material breach of contract.

All certificates required by this Contract shall be sent directly to **Gila County Purchasing Department, 1400 E. Ash St., Globe, AZ, 85501** or email to dsgroi@co.gila.az.us,. The County project/contract number and project description shall be noted on the certificate of insurance. The County reserves the right to require complete, certified copies of all insurance policies required by this Contract at any time.

F. **SUBCONTRACTORS:** Contractors' certificate(s) shall include all subcontractors as additional insured's under its policies **or** Contractor shall furnish to the County separate certificates and endorsements for each subcontractor. All coverage's for subcontractors shall be subject to the minimum requirements identified above.

G. **APPROVAL:** Any modification or variation from the insurance requirements in this Contract shall be made by the County Attorney, whose decision shall be final. Such action will not require a formal Contract amendment, but may be made by administrative action.

ARTICLE 5 – LEGAL ARIZONA WORKERS ACT COMPLIANCE: Contractor hereby warrants that it will at all times during the term of this Contract comply with all federal immigration laws applicable to Contractor's employment of its employees, and with the requirements of A.R.S. § 23-214 (A) (together the

"State and Federal Immigration Laws"). Contractor shall further ensure that each subcontractor who performs any work for Contractor under this contract likewise complies with the State and Federal Immigration Laws. County shall have the right at any time to inspect the books and records of Contractor and any subcontractor in order to verify such party's compliance with the State and Federal Immigration Laws.

Any breach of Contractor's or any subcontractor's warranty of compliance with the State and Federal Immigration Laws, or of any other provision of this section, shall be deemed to be a material breach of this Contract subjecting Contractor to penalties up to and including suspension or termination of this Contract. If the breach is by a subcontractor, and the subcontract is suspended or terminated as a result, Contractor shall be required to take such steps as may be necessary to either self-perform the services that would have been provided under the subcontract or retain a replacement subcontractor as soon as possible so as not to delay project completion.

Contractor shall advise each subcontractor of County's rights, and the subcontractor's obligations, under this Article by including a provision in each subcontract substantially in the following form: "Subcontractor hereby warrants that it will at all times during the term of this contract comply with all federal immigration laws applicable to Subcontractor's employees, and with the requirements of A.R.S. § 23-214 (A). Subcontractor further agrees that County may inspect the Subcontractor's books and records to insure that Subcontractor is in compliance with these requirements. Any breach of this paragraph by Subcontractor will be deemed to be a material breach of this contract subjecting Subcontractor to penalties up to and including suspension or termination of this contract."

Any additional costs attributable directly or indirectly to remedial action under this Article shall be the responsibility of Contractor. In the event that remedial action under this Article results in delay to one or more tasks on the critical path of Contractor's approved construction or critical milestones schedule, such period of delay shall be deemed excusable delay for which Contractor shall be entitled to an extension of time, but not costs.

ARTICLE 6 – LAWS AND ORDINANCES: This agreement shall be enforced under the laws of the State of Arizona. Contractor shall maintain in current status all Federal, State and Local licenses and permits required for the operation of the business conducted by the Contractor. The Contractor shall comply with the applicable provisions of the Americans with Disabilities Act (Public Law 101-336, 42 U.S.C. 12101-12213) and applicable federal regulations under the Act.

ARTICLE 7– ANTI-TERRORISM WARRANTY: Pursuant to A.R.S. § 35-393.06(B) and 35-301.06(A) the Contractor certifies that it does not have scrutinized business operations in Iran or Sudan and that they are in compliance with the Export Administration Act and not on the Excluded Parties List.

ARTICLE 8 – CANCELLATION: This agreement is subject to cancellation pursuant to A.R.S. §38-511. If the Agreement is terminated, the county shall be liable only for payment for services rendered and accepted material received by the County before the effective date of termination.

ARTICLE 9 – RELATIONSHIP OF THE PARTIES: Contractor is an independent contractor of the County. Contractor represents that he has or will secure, at his own expense, all personnel required in performing the services under this contract. Such personnel shall not be employees of or have any contractual relationship with the County. All personnel engaged in work under this contract shall be fully qualified and shall be authorized or permitted under State and local law to perform such services. Contractor warrants that he has obtained or will obtain Worker's Compensation Insurance for his employees working on this contract and that any subcontractors will likewise obtain Worker's Compensation Insurance for of their employees working on this contract. It is further agreed by

Contractor that he shall obey all state and federal statutes, rules, and regulations which are applicable to provisions of the services called for herein. Neither Contractor nor any employee of the Contractor shall be deemed an officer, employee, or agent of the County.

ARTICLE 10 – NON-APPROPRIATIONS CLAUSE: Contractor acknowledges that the County is a governmental entity, and the contract validity is based upon the availability of public funding under its authority. In the event that public funds are unavailable and not appropriated for the performance of County's obligations under this contract, then this contract shall automatically expire without penalty to County after written notice to Contractor of the unavailability and non-appropriation of public funds. It is expressly agreed that the County shall only activate this non-appropriation provision as an emergency fiscal measure. The County shall not activate this non-appropriation provision for its convenience, to circumvent the requirements of this contract, or to enable the County to contract with another Contractor for the same supplies or services covered under this Addendum.

ARTICLE 11 – ENTIRE CONTRACT CLAUSE: The Contractor and the County have read this Contract and agree to be bound by all of its terms, and further agree that it constitutes the entire contract between the two parties and may only be modified by a written mutual contract signed by the parties. No oral agreement or oral provision outside this Contract shall have any force or effect.

ARTICLE 12 – NON-WAIVER OF ENFORCEABILITY: Failure of the County to enforce, at any time, any of the provisions of this Contract, or to request at any time performance by Contractor of any of the provisions hereof, shall in no way be construed to be a waiver of such provisions, nor in any way affect the validity of this contract or any part thereof, or the right of the County to enforce each and every provision

ARTICLE 13 – GOVERNING LAW: Both parties agree that this Contract shall be governed by the laws of the state of Arizona. The parties further agree that the jurisdiction for any legal disputes arising out of this Contract shall be the Superior Court of the State of Arizona. The parties agree that even if this Contract does not specifically reference any provision required by state or federal law, those state and federally required provisions are incorporated into this Contract by this reference as though they were specifically listed herein.

ARTICLE 14– TERM: Contract shall be effective date signed by the County Manager and expire 60 days thereafter.

ARTICLE 15 – PAYMENT/BILLING: Contractor shall be paid a flat fee of **$ 47,385.66** for completion of the projects as outlined in the Scope of Services.

All invoices shall be submitted to Gila County Accounts Payable, 1400 E. Ash St, Globe, Arizona and include the following information:

- Purchase Order Number
- Contract Number
- Invoice Number
- Service Location
- Vendor Name and Address
- Description of Service

Any alterations to the scope of work resulting in a change in cost must have prior written approval by the County. Any unauthorized work may result in non-payment to the vendor.

Gila County employs a "Net 15" payment term for services meaning the payment will be issued fifteen (15) days from the date the County receives the invoice from the Contractor. Purchase orders sent to the Contractor reflect these terms and conditions.

The Contractor shall have a current I.R.S. W-9 form on file with the County unless not required by law. The County shall not remit payment if the Contractor does not have a current W-9.

IN WITNESS WHEREOF, Service Agreement No. 011013 has been duly executed by the parties hereinabove named, on the date and year first above written.

GILA COUNTY

Don E. McDaniel Jr., County Manager

Date: 1/16/13

NOBLE BUILDING LLC ~~INC.~~

Signature

J. Byron Tarrenhaus

Print Name

ATTACHMENT "A"

GILA COUNTY COMMUNITY SERVICES DIVISION

Location: 5515 South Apache Ave., Globe, AZ 85501
PHONE: (928) 425-7631 FAX: (928) 425-9468
"Improving the Quality of Life for all Residents"

Gila County Community Action/Housing Services
Weatherization Program

BID RESULTS FORM

Quote Request Date: 1/03/2013 Job Number: CDBG 152-12-03

Name: Jennifer Miller

Address: 750 S. Second St.

The following bids were received at the Gila County Housing Services Department, 5515 S. Apache Ave Suite 200, Globe, AZ 85501; at 10:00 ☒am ☐pm. Bidding should be at least 72 hours from the time of the initial request.

NAME OF BIDDER:	VERBAL CONTACT	BID AMOUNT:
Mountain		$ 65,445.00
Point		$ No bid
Noble		$ 47 305.66
Rodriguez		$ 50 641.42
		$
		$

Person opening bids: Gabriel Eylicio Witness: Nicholas Montague

Bidder Selected: Noble

Supervisor Sign-off 1-8-2012 Date

Housing Rehabilitation | Community Action | Section 8 Housing | GEST
Workforce Investment Act | REPAC | Weatherization Program

Reasonable accommodations for persons with disabilities may be requested.

ATTACHMENT "A"

NOBLE BUILDING, L.L.C.
236 W. Thompson Road
PAYSON, AZ 85541

Estimate

12/31/2012

Jennifer Miller
750 S. Second st
Globe AZ 85501

P.O. No.

Description	Total
#5- 200 amp panel	1,200.00T
#6- Rewire house	5,040.00T
#7- Roofing	12,000.00T
#8- HVAC	9,178.16T
#9- Stairs	600.00T
#10- Insulation	1,800.00T
#11- butt closet	180.00T
#12- Drywall and prime	750.00T
#13- windows	5,100.00T
#14- Int door	300.00T
#15- Back door	800.00T
#16- Front door	800.00T
#17- Under stair door	300.00T
#18- Attic door	300.00T
#19-Interior paint	4,500.00T
#20-Exterior paint	2,000.00T
#21- Indoor out door carpet	630.84T

Subtotal	$45,155.00
Sales Tax (4.94%)	$2,230.66
Total	$47,385.66

excepted _____

Phone # (928) 478-0059 Fax # (928) 478-4514 nobiebuildingllc@yahoo.com

Tommie C. Martin, District I
P.O. Box 2297 Payson, AZ. 85547
(928) 474-2029

Michael A. Pastor, District II
1400 E. Ash St. Globe, AZ. 85501
(928) 425-3231 Ext. 8753

John Marcanti, District III
1400 E. Ash St. Globe, AZ. 85501
(928) 425-3231 Ext. 8511

GILA COUNTY
www.gilacountyaz.gov

Don E. McDaniel Jr., County Manager
Phone (928) 425-3231 Ext.8761

Joseph T. Heatherly, Finance Director
Phone (928) 425-3231 Ext. 8743
Fax: (928)425-7056

1400 E. Ash Street
Globe, AZ 85501

SERVICE AGREEMENT NO. 011113

WEATHERIZATION PROJECT NO. HH#9088

THIS AGREEMENT, made and entered into this 16TH day of JANUARY, **2013**, by and between Gila County, a political subdivision of the State of Arizona hereinafter designated the County, and **Rodriguez Construction, Inc.**, of the City of Globe, State of Arizona, hereinafter designated the Contractor.

WITNESSETH: The Contractor, for and in consideration of the sum to be paid him by the County, in the manner and at the time hereinafter provided, and of the other covenants and agreement's herein contained, hereby agrees, for himself, his heirs, administrators, successors, and assigns as follows:

ARTICLE 1 – SCOPE OF SERVICES: The Contractor shall provide the services and products listed in the Scope of Work below and shall do so in a good, workmanlike, and substantial manner and to the satisfaction of the County under the direction of the Housing Services Manager or designee.

All work performed by the Contractor shall be completed to local codes and regulation per Gila County and the State of Arizona and consistent with all Weatherization guidelines.

Scope of Work: Refer to attached Attachment "A" by mention made a binding part of this agreement as set forth herein.

Contractor Fee's: Refer to Attachment "A" by mention made a binding part of this agreement as set forth herein.

ARTICLE 2 – TERMINATION: The County reserves the right to terminate the Contract, in whole or in part at any time, when in the best interest of the County, without penalty or recourse. Upon receipt of the written notice, the Contractor shall stop all work as directed in the notice. If the contract is terminated, the County shall be liable only for the services rendered under this contract and accepted material received by the County before the effective date of termination.

ARTICLE 3 - INDEMNIFICATION: Contractor shall indemnify, defend, save and hold harmless the County of Gila and its officers, officials, agents, and employees (hereinafter referred to as "Indemnitee") from and against any and all claims, actions, liabilities, damages, losses, or expenses (including court costs, attorneys'

fees, and costs of claim processing, investigation and litigation) (hereinafter referred to as "Claims") for bodily injury or personal injury (including death), or loss or damage to tangible or intangible property caused, or alleged to be caused, in whole or in part, by the negligent or willful acts or omissions of Contractor or any of its owners, officers, directors, agents, employees or subcontractors. This indemnity includes any claim or amount arising out of or recovered under the Workers' Compensation Law or arising out of the failure of such contractor to conform to any federal, state or local law, statute, ordinance, rule, regulation or court decree. It is the specific intention of the parties that the Indemnitee shall, in all instances, except for Claims arising solely from the negligent or willful acts or omissions of the Indemnitee, be indemnified by Contractor from and against any and all claims. It is agreed that Contractor will be responsible for primary loss investigation, defense and judgment costs where this indemnification is applicable. In consideration of the award of this contract, the Contractor agrees to waive all rights of subrogation against the County, its officers, officials, agents and employees for losses arising from the work performed by the Contractor for the County.

ARTICLE 4 – INSURANCE REQUIREMENTS: Contractor and subcontractors shall procure and maintain until all of their obligations have been discharged, including any warranty periods under this Contract are satisfied, insurance against claims for injury to persons or damage to property which may arise from or in connection with the performance of the work hereunder by the Contractor, his agents, representatives, employees or subcontractors.

The insurance requirements herein are minimum requirements for this Contract and in no way limit the indemnity covenants contained in this Contract. The County in no way warrants that the minimum limits contained herein are sufficient to protect the Contractor from liabilities that might arise out of the performance of the work under this contract by the Contractor, his agents, representatives, employees or subcontractors and Contractor is free to purchase additional insurance as may be determined necessary.

A. **MINIMUM SCOPE AND LIMITS OF INSURANCE:** Contractor shall provide coverage with limits of liability not less than those stated below.

1. **Commercial General Liability – Occurrence Form**
   Policy shall include bodily injury, property damage and broad form contractual liability coverage.
   - General Aggregate $2,000,000
   - Products – Completed Operations Aggregate $1,000,000
   - Personal and Advertising Injury $1,000,000
   - Each Occurrence $1,000,000

   a. The policy shall be endorsed to include the following additional insured language: **"The County of Gila shall be named as an additional insured with respect to liability arising out of the activities performed by, or on behalf of the Contractor".**

2. **Worker's Compensation and Employers' Liability**

Workers' Compensation	Statutory
Employers' Liability	
Each Accident	$100,000
Disease – Each Employee	$100,000
Disease – Policy Limit	$500,000

   a. Policy shall contain a **waiver of subrogation** against the County of Gila.

3. **Professional Liability (Errors and Omissions Liability)**

Each Claim	$1,000,000
Annual Aggregate	$2,000,000

   a. In the event that the professional liability insurance required by this Contract is written on a claims-made basis, Contractor warrants that any retroactive date under the policy shall precede the effective date of this Contract; and that either continuous coverage will be maintained or an extended discovery period will be exercised for a period of two (2) years beginning at the time work under this Contract is completed.

B. **ADDITIONAL INSURANCE REQUIREMENTS:** The policies shall include, or be endorsed to include, the following provisions:

1. On insurance policies where the County of Gila is named as an additional insured, the County of Gila shall be an additional insured to the full limits of liability purchased by the Contractor even if those limits of liability are in excess of those required by this Contract.
2. The Contractor's insurance coverage shall be primary insurance and non-contributory with respect to all other available sources.
3. Coverage provided by the Contractor shall not be limited to the liability assumed under the indemnification provisions of this Contract.

C. **NOTICE OF CANCELLATION:** Each insurance policy required by the insurance provisions of this Contract shall provide the required coverage and shall not be suspended, voided, canceled, reduced in coverage or endorsed to lower limits except after thirty (30) days prior written notice has been given to the County. Such notice shall be sent directly to **Gila County Purchasing Department, Attention: Jeannie Sgroi, 1400 E. Ash St., Globe, AZ, 85501** and shall be sent by certified mail, return receipt requested.

D. **ACCEPTABILITY OF INSURERS:** Insurance is to be placed with insurers duly licensed or approved unlicensed companies in the state of Arizona and with an "A.M. Best" rating of not less than B+ VI. The County in no way warrants that the above-required minimum insurer rating is sufficient to protect the Contractor from potential insurer insolvency.

E. **VERIFICATION OF COVERAGE:** Contractor shall furnish the County with certificates of insurance (ACORD form or equivalent approved by the County) as required by this Contract. The certificates for each insurance policy are to be signed by a person authorized by that insurer to bind coverage on its behalf.

All certificates and endorsements are to be received and approved by the County before work commences. Each insurance policy required by this Contract must be in effect at or prior to commencement of work under this Contract and remain in effect for the duration of the project. Failure to maintain the insurance policies as required by this Contract or to provide evidence of renewal is a material breach of contract.

All certificates required by this Contract shall be sent directly to **Gila County Purchasing Department, Attention: Jeannie Sgroi, 1400 E. Ash St., Globe, AZ, 85501** or via email to Ms. Sgroi at dsgroi@co.gila.az.us. The County project/contract number and project description shall be noted on the certificate of insurance. The County reserves the right to require complete, certified copies of all insurance policies required by this Contract at any time.

F. **SUBCONTRACTORS:** Contractors' certificate(s) shall include all subcontractors as additional insured's under its policies **or** Contractor shall furnish to the County separate certificates and endorsements for each subcontractor. All coverage's for subcontractors shall be subject to the minimum requirements identified above.

G. **APPROVAL:** Any modification or variation from the insurance requirements in this Contract shall be made by the County Attorney, whose decision shall be final. Such action will not require a formal Contract amendment, but may be made by administrative action.

ARTICLE 5 – LEGAL ARIZONA WORKERS ACT COMPLIANCE: Contractor hereby warrants that it will at all times during the term of this Contract comply with all federal immigration laws applicable to Contractor's employment of its employees, and with the requirements of A.R.S. § 23-214 (A) (together the "State and Federal Immigration Laws"). Contractor shall further ensure that each subcontractor who performs any work for Contractor under this contract likewise complies with the State and Federal Immigration Laws. County shall

have the right at any time to inspect the books and records of Contractor and any subcontractor in order to verify such party's compliance with the State and Federal Immigration Laws.
Any breach of Contractor's or any subcontractor's warranty of compliance with the State and Federal Immigration Laws, or of any other provision of this section, shall be deemed to be a material breach of this Contract subjecting Contractor to penalties up to and including suspension or termination of this Contract. If the breach is by a subcontractor, and the subcontract is suspended or terminated as a result, Contractor shall be required to take such steps as may be necessary to either self-perform the services that would have been provided under the subcontract or retain a replacement subcontractor as soon as possible so as not to delay project completion.

Contractor shall advise each subcontractor of County's rights, and the subcontractor's obligations, under this Article by including a provision in each subcontract substantially in the following form: "Subcontractor hereby warrants that it will at all times during the term of this contract comply with all federal immigration laws applicable to Subcontractor's employees, and with the requirements of A.R.S. § 23-214 (A). Subcontractor further agrees that County may inspect the Subcontractor's books and records to insure that Subcontractor is in compliance with these requirements. Any breach of this paragraph by Subcontractor will be deemed to be a material breach of this contract subjecting Subcontractor to penalties up to and including suspension or termination of this contract."

Any additional costs attributable directly or indirectly to remedial action under this Article shall be the responsibility of Contractor. In the event that remedial action under this Article results in delay to one or more tasks on the critical path of Contractor's approved construction or critical milestones schedule, such period of delay shall be deemed excusable delay for which Contractor shall be entitled to an extension of time, but not costs.

ARTICLE 6 – LAWS AND ORDINANCES: This agreement shall be enforced under the laws of the State of Arizona. Contractor shall maintain in current status all Federal, State and Local licenses and permits required for the operation of the business conducted by the Contractor. The Contractor shall comply with the applicable provisions of the Americans with Disabilities Act (Public Law 101-336, 42 U.S.C. 12101-12213) and applicable federal regulations under the Act.

ARTICLE 7– ANTI-TERRORISM WARRANTY: Pursuant to A.R.S. § 35-393.06(B) and 35-301.06(A) the Contractor certifies that it does not have scrutinized business operations in Iran or Sudan and that they are in compliance with the Export Administration Act and not on the Excluded Parties List.

ARTICLE 8 – CANCELLATION: This agreement is subject to cancellation pursuant to A.R.S. §38-511. If the Agreement is terminated, the county shall be liable only for payment for services rendered and accepted material received by the County before the effective date of termination.

ARTICLE 9 – RELATIONSHIP OF THE PARTIES: Contractor is an independent contractor of the County. Contractor represents that he has or will secure, at his own expense, all personnel required in performing the services under this contract. Such personnel shall not be employees of or have any contractual relationship with the County. All personnel engaged in work under this contract shall be fully qualified and shall be authorized or permitted under State and local law to perform such services. Contractor warrants that he has obtained or will obtain Worker's Compensation Insurance for his employees working on this contract and that any subcontractors will likewise obtain Worker's Compensation Insurance for of their employees working on this contract. It is further agreed by Contractor that he shall obey all state and federal statutes, rules, and regulations which are applicable to provisions of the services called for herein. Neither Contractor nor any employee of the Contractor shall be deemed an officer, employee, or agent of the County.

ARTICLE 10 – NON-APPROPRIATIONS CLAUSE: Contractor acknowledges that the County is a governmental entity, and the contract validity is based upon the availability of public funding under its authority. In the event that public funds are unavailable and not appropriated for the performance of County's obligations under this contract, then this contract shall automatically expire without penalty to County after written notice to Contractor of the unavailability and non-appropriation of public funds. It is expressly agreed that the County shall only activate this non-appropriation provision as an emergency fiscal measure. The County shall not activate this non-appropriation provision for its convenience, to circumvent the requirements of this contract, or to enable the County to contract with another Contractor for the same supplies or services covered under this Addendum.

ARTICLE 11 – ENTIRE CONTRACT CLAUSE: The Contractor and the County have read this Contract and agree to be bound by all of its terms, and further agree that it constitutes the entire contract between the two parties and may only be modified by a written mutual contract signed by the parties. No oral agreement or oral provision outside this Contract shall have any force or effect.

ARTICLE 12 – NON-WAIVER OF ENFORCEABILITY: Failure of the County to enforce, at any time, any of the provisions of this Contract, or to request at any time performance by Contractor of any of the provisions hereof, shall in no way be construed to be a waiver of such provisions, nor in any way affect the validity of this contract or any part thereof, or the right of the County to enforce each and every provision

ARTICLE 13 – GOVERNING LAW: Both parties agree that this Contract shall be governed by the laws of the state of Arizona. The parties further agree that the jurisdiction for any legal disputes arising out of this Contract shall be the Superior Court of the State of Arizona. The parties agree that even if this Contract does not specifically reference any provision required by state or federal law, those state and federally required provisions are incorporated into this Contract by this reference as though they were specifically listed herein.

ARTICLE 14– TERM: Contract shall be effective date signed by the County Manager and expires 60 days thereafter.

ARTICLE 15 – PAYMENT/BILLING: Contractor shall be paid a flat fee of **$ 11,699.15** for completion of the projects as outlined in the Scope of Services.

All invoices shall be submitted to Gila County Accounts Payable, 1400 E. Ash St, Globe, Arizona and include the following information:

- Purchase Order Number
- Contract Number
- Invoice Number
- Service Location
- Vendor Name and Address
- Description of Service

Any alterations to the scope of work resulting in a change in cost must have prior written approval by the County. Any unauthorized work may result in non-payment to the vendor.

Gila County employs a "Net 15" payment term for services meaning the payment will be issued fifteen (15) days from the date the County receives the invoice from the Contractor. Purchase orders sent to the Contractor reflect these terms and conditions.

The Contractor shall have a current I.R.S. W-9 form on file with the County unless not required by law. The County shall not remit payment if the Contractor does not have a current W-9.

IN WITNESS WHEREOF, Service Agreement No. 011113 *has been duly executed by the parties hereinabove named, on the date and year first above written.*

GILA COUNTY

Don E. McDaniel, Jr., County Manager

Date: 1/16/13

RODRIGUEZ CONSTRUCTIONS, INC.

Art Rodriguez

ATTACHMENT "A"

GILA COUNTY COMMUNITY SERVICES DIVISION

Location: 5515 South Apache Ave., Globe, AZ 85501
PHONE: (928) 425-7631 FAX: (928) 425-9468
"Improving the Quality of Life for all Residents"

Gila County Community Action/Housing Services
Weatherization Program

BID RESULTS FORM

Quote Request Date: 1-8-13 Job Number: 9088

Name: Estelle Whitney

Address: 547 S. High Street, Globe Az 85501

The following bids were received at the Gila County Housing Services Department, 5515 S. Apache Ave Suite 200, Globe, AZ 85501; at 1250 ☐am ☒pm. Bidding should be at least 72 hours from the time of the initial request.

NAME OF BIDDER:	VERBAL CONTACT	BID AMOUNT:
Mountain Retreat		$ No bid
Noble Building		$ No bid
Rodriguez Constructions		$ 11,699.15
		$
		$
		$

Person opening bids: Nicholas Montague Witness: Gabriel E. Eglises

Bidder Selected: Rodriguez Constructions

Supervisor Sign-off 1-10-2013 Date

Housing Rehabilitation **Community Action** **Section 8 Housing** **GEST**

Workforce Investment Act **REPAC** **Weatherization Program**

Reasonable accommodations for persons with disabilities may be requested.
Countywide TTY (928) 425-0839

ATTACHMENT "A"

RODRIGUEZ CONSTRUCTIONS INC.

11-30-2012

TO: Gila County Housing – Weatherization Program
ATTN: Gabe Eylicio
5515 South Apache Avenue
Globe, AZ. 85501
RE: 15829---HH #9088

• Reduce infiltration to BAS level to 1504 CFM (reduction of 3384 CFM) =	$2,310.00
• Install fiberglass blown insulation to attic area for an R-38 (1384 SF) =	$1,384.00
• Install 8 CFL's at $8.00 ea. =	$ 64.00
• Water Heater OK, needs new flue and T&P line =	$ 425.00
• Refrigerator does not qualify.	
• LCNC	$ 250.00
• A/C System – A 14 SEER 60,000 BTU gas pack manufactured by RUUD will be installed on roof top. One (1) new 230V electrical circuit will be ran from SEP to service disconnect. A new plenum with a return system will have to be fabricated. New duct work along with adjustable supply registers will feed all rooms in home with the appropriate sizes needed. Condensation line will be installed. Installation will include new digital thermostat. Rodriguez will remove evaporative cooler and seal the window accordingly. 1) Gas pack will be sized to the home per ACCA Manual J, Residential Load. 2) Install and vent the unit per the manufacturer's instructions (PMI). 3) Electrical supply will be a dedicated circuit with a switch at the unit. 4) The temp rise and match to unit will be checked (PMI).	$6,579.00
Sub Total =	$11,012.00
6.24% Sales Tax=	$ 687.15
Total Contract Amount =	**$11,699.15**

Respectfully Submitted,

by Art J. Rodriguez

PO Box 13, Miami AZ 85539 * 547 S. East Street, Globe AZ 85501 * Phone: 928-425-7244* Fax: 928-425-5337
Info@rodriguez-az.com
RES/COMM. LIC. # ROC247373K42* RES. # ROC247371B* COMM. # ROC247372 B-01

AMENDMENT NO. 3

The following amendments are hereby incorporated into the contract documents for the below stated project:

CONTRACT NO. 100109-10R
AUTOMATED VENDING MACHINE SERVICES

SWIRE COCA-COLA, USA

Effective January 12, 2010, Gila County and Swire Coca-Cola, USA entered into a contract whereby Swire Coca-Cola, USA agreed to provide vending machine services to Gila County facilities in Globe and Payson for a one (1) year period. Per Article III of the contract, this period may be renewed by mutual agreement of the parties for four (4) additional one (1) year periods.

Amendment No. 1 extended the contract for a one (1) year period from January 12, 2011 to January 11, 2012.

Amendment No. 2 extended the contract for a one (1) year period from January 12, 2012 to January 11, 2013.

Amendment No. 3 will extend the contract period for a one (1) year period from January 12, 2013 to January 11, 2014.

All other terms and conditions of the original agreement shall remain in full force and affect during the term of the contract.

IN WITNESS WHEREOF, two (2) identical counterparts of this amendment, each which shall include original signatures and for all purposes be deemed an original thereof, have been duly executed by the parties hereinabove named, on this 16 TH day of JANUARY, ~~2012~~ 2013

GILA COUNTY

1/10/13
Don E. McDaniel, Jr., County Manager

CONTRACTOR

SWIRE COCA-COLA, USA

Manuel Rodriguez
Authorized Signature

Manuel Rodriguez
Print Name

Tommie C. Martin, District I
P.O. Box 2297 Payson, AZ. 85547
(928) 474-2029

Michael A. Pastor, District II
1400 E. Ash St. Globe, AZ. 85501
(928) 425-3231 Ext. 8753

John Marcanti, District III
1400 E. Ash St. Globe, AZ. 85501
(928) 425-3231 Ext. 8511

GILA COUNTY
www.gilacountyaz.gov

Don E. McDaniel Jr., County Manager
Phone (928) 425-3231 Ext.8761

Joseph T. Heatherly, Finance Director
Phone (928) 425-3231 Ext. 8743

1400 E. Ash Street
Globe, AZ 85501

SERVICE AGREEMENT NO. 010413

FIELD LINING SYSTEMS, INC.
Repair West Leachate Pond at Buckhead Mesa Landfill

THIS AGREEMENT, made and entered into this 16TH day of JANUARY, **2013,** by and between Gila County, a political subdivision of the State of Arizona hereinafter designated the County, and **Field Lining Systems, Inc.**, of the City of Avondale, State of Arizona, hereinafter designated the Contractor.

WITNESSETH: The Contractor, for and in consideration of the sum to be paid him by the County, in the manner and at the time hereinafter provided, and of the other covenants and agreement's herein contained, hereby agrees, for himself, his heirs, administrators, successors, and assigns as follows:

ARTICLE 1 – SCOPE OF SERVICES: The Contractor shall provide the services and products listed in the scope of work below and shall do so in a good, workmanlike, and substantial manner and to the satisfaction of the County under the direction of the County Recycling and Landfill Manager or designee.

Scope of Work: Refer to attached Attachment "A" by mention made a binding part of this agreement as set forth herein.

Contractor Fee's: Refer to Attachment "A" by mention made a binding part of this agreement as set forth herein.

ARTICLE 2 – TERMINATION: The County reserves the right to terminate the Contract, in whole or in part at any time, when in the best interest of the County, without penalty or recourse. Upon receipt of the written notice, the Contractor shall stop all work as directed in the notice. If the contract is terminated, the County shall be liable only for the services rendered under this contract and accepted material received by the County before the effective date of termination.

ARTICLE 3 - INDEMNIFICATION: Contractor shall indemnify, defend, save and hold harmless the County of Gila and its officers, officials, agents, and employees (hereinafter referred to as "Indemnitee") from and against any and all claims, actions, liabilities, damages, losses, or expenses (including court costs, attorneys' fees, and costs of claim processing, investigation and litigation) (hereinafter referred to as "Claims") for bodily injury or personal injury (including death), or loss or damage to tangible or intangible property caused, or alleged to be caused, in whole or in part, by the negligent or willful acts or omissions of Contractor or any of its owners, officers, directors, agents, employees or subcontractors. This indemnity includes any claim or amount arising out of or recovered under the Workers' Compensation Law or arising out of the failure of such contractor to conform to any federal, state or local law, statute, ordinance, rule, regulation or court decree. It is the specific intention of the parties that the Indemnitee shall, in all instances, except for Claims arising solely from the negligent or willful acts or omissions of the Indemnitee, be indemnified by Contractor from and against any and all claims. It is agreed that Contractor will be responsible for primary loss investigation, defense and judgment costs where this indemnification is applicable. In consideration of the award of this contract, the Contractor agrees to waive all rights of subrogation against the County, its officers, officials, agents and employees for losses arising from the work performed by the Contractor for the County.

ARTICLE 4 – INSURANCE REQUIREMENTS: Contractor and subcontractors shall procure and maintain until all of their obligations have been discharged, including any warranty periods under this Contract are satisfied, insurance against claims for injury to persons or damage to property which may arise from or in connection with the performance of the work hereunder by the Contractor, his agents, representatives, employees or subcontractors.

The insurance requirements herein are minimum requirements for this Contract and in no way limit the indemnity covenants contained in this Contract. The County in no way warrants that the minimum limits contained herein are sufficient to protect the Contractor from liabilities that might arise out of the performance of the work under this contract by the Contractor, his agents, representatives, employees or subcontractors and Contractor is free to purchase additional insurance as may be determined necessary.

A. **MINIMUM SCOPE AND LIMITS OF INSURANCE:** Contractor shall provide coverage with limits of liability not less than those stated below.

1. **Commercial General Liability – Occurrence Form**
   Policy shall include bodily injury, property damage and broad form contractual liability coverage.
   - General Aggregate $2,000,000
   - Products – Completed Operations Aggregate $1,000,000
   - Personal and Advertising Injury $1,000,000
   - Each Occurrence $1,000,000

   a. The policy shall be endorsed to include the following additional insured language: **"The County of Gila shall be named as an additional insured with respect to liability arising out of the activities performed by, or on behalf of the Contractor".**

2. **Worker's Compensation and Employers' Liability**

Workers' Compensation	Statutory
Employers' Liability	
Each Accident	$100,000
Disease – Each Employee	$100,000
Disease – Policy Limit	$500,000

   a. Policy shall contain a **waiver of subrogation** against the County of Gila.

3. **Professional Liability (Errors and Omissions Liability)**

Each Claim	$1,000,000

Annual Aggregate	$2,000,000

a. In the event that the professional liability insurance required by this Contract is written on a claims-made basis, Contractor warrants that any retroactive date under the policy shall precede the effective date of this Contract; and that either continuous coverage will be maintained or an extended discovery period will be exercised for a period of two (2) years beginning at the time work under this Contract is completed.

B. **ADDITIONAL INSURANCE REQUIREMENTS:** The policies shall include, or be endorsed to include, the following provisions:

1. On insurance policies where the County of Gila is named as an additional insured, the County of Gila shall be an additional insured to the full limits of liability purchased by the Contractor even if those limits of liability are in excess of those required by this Contract.
2. The Contractor's insurance coverage shall be primary insurance and non-contributory with respect to all other available sources.
3. Coverage provided by the Contractor shall not be limited to the liability assumed under the indemnification provisions of this Contract.

C. **NOTICE OF CANCELLATION:** Each insurance policy required by the insurance provisions of this Contract shall provide the required coverage and shall not be suspended, voided, canceled, reduced in coverage or endorsed to lower limits except after thirty (30) days prior written notice has been given to the County. Such notice shall be sent directly to **Gila County Purchasing Department, 1400 E. Ash St., Globe, AZ, 85501** or and shall be sent by certified mail, return receipt requested.

D. **ACCEPTABILITY OF INSURERS:** Insurance is to be placed with insurers duly licensed or approved unlicensed companies in the state of Arizona and with an "A.M. Best" rating of not less than B+ VI. The County in no way warrants that the above-required minimum insurer rating is sufficient to protect the Contractor from potential insurer insolvency.

E. **VERIFICATION OF COVERAGE:** Contractor shall furnish the County with certificates of insurance (ACCORD form or equivalent approved by the County) as required by this Contract. The certificates for each insurance policy are to be signed by a person authorized by that insurer to bind coverage on its behalf.

All certificates and endorsements are to be received and approved by the County before work commences. Each insurance policy required by this Contract must be in effect at or prior to commencement of work under this Contract and remain in effect for the duration of the project. Failure to maintain the insurance policies as required by this Contract or to provide evidence of renewal is a material breach of contract.

All certificates required by this Contract shall be sent directly to **Gila County Purchasing Department, 1400 E. Ash St., Globe, AZ, 85501** or email to dsgroi@co.gila.az.us,. The County project/contract number and project description shall be noted on the certificate of insurance. The County reserves the right to require complete, certified copies of all insurance policies required by this Contract at any time.

F. **SUBCONTRACTORS:** Contractors' certificate(s) shall include all subcontractors as additional insured's under its policies **or** Contractor shall furnish to the County separate certificates and endorsements for each subcontractor. All coverage's for subcontractors shall be subject to the minimum requirements identified above.

G. **APPROVAL:** Any modification or variation from the insurance requirements in this Contract shall be made by the County Attorney, whose decision shall be final. Such action will not require a formal Contract amendment, but may be made by administrative action.

ARTICLE 5 – LEGAL ARIZONA WORKERS ACT COMPLIANCE: Contractor hereby warrants that it will at all times during the term of this Contract comply with all federal immigration laws applicable to Contractor's employment of its employees, and with the requirements of A.R.S. § 23-214 (A) (together the "State and Federal Immigration Laws"). Contractor shall further ensure that each subcontractor who performs any work for Contractor under this contract likewise complies with the State and Federal Immigration Laws. County shall have the right at any time to inspect the books and records of Contractor and any subcontractor in order to verify such party's compliance with the State and Federal Immigration Laws.

Any breach of Contractor's or any subcontractor's warranty of compliance with the State and Federal Immigration Laws, or of any other provision of this section, shall be deemed to be a material breach of this Contract subjecting Contractor to penalties up to and including suspension or termination of this Contract. If the breach is by a subcontractor, and the subcontract is suspended or terminated as a result, Contractor shall be required to take such steps as may be necessary to either self-perform the services that would have been provided under the subcontract or retain a replacement subcontractor as soon as possible so as not to delay project completion.

Contractor shall advise each subcontractor of County's rights, and the subcontractor's obligations, under this Article by including a provision in each subcontract substantially in the following form: "Subcontractor hereby warrants that it will at all times during the term of this contract comply with all federal immigration laws applicable to Subcontractor's employees, and with the requirements of A.R.S. § 23-214 (A). Subcontractor further agrees that County may inspect the Subcontractor's books and records to insure that Subcontractor is in compliance with these requirements. Any breach of this paragraph by Subcontractor will be deemed to be a material breach of this contract subjecting Subcontractor to penalties up to and including suspension or termination of this contract."

Any additional costs attributable directly or indirectly to remedial action under this Article shall be the responsibility of Contractor. In the event that remedial action under this Article results in delay to one or more tasks on the critical path of Contractor's approved construction or critical milestones schedule, such period of delay shall be deemed excusable delay for which Contractor shall be entitled to an extension of time, but not costs.

ARTICLE 6 – LAWS AND ORDINANCES: This agreement shall be enforced under the laws of the State of Arizona. Contractor shall maintain in current status all Federal, State and Local licenses and permits required for the operation of the business conducted by the Contractor. The Contractor shall comply with the applicable provisions of the Americans with Disabilities Act (Public Law 101-336, 42 U.S.C. 12101-12213) and applicable federal regulations under the Act.

ARTICLE 7– ANTI-TERRORISM WARRANTY: Pursuant to A.R.S. § 35-393.06(B) and 35-301.06(A) the Contractor certifies that it does not have scrutinized business operations in Iran or Sudan and that they are in compliance with the Export Administration Act and not on the Excluded Parties List.

ARTICLE 8 – CANCELLATION: This agreement is subject to cancellation pursuant to A.R.S. §38-511. If the Agreement is terminated, the county shall be liable only for payment for services rendered and accepted material received by the County before the effective date of termination.

ARTICLE 9 – RELATIONSHIP OF THE PARTIES: Contractor is an independent contractor of the County. Contractor represents that he has or will secure, at his own expense, all personnel required in performing the services under this contract. Such personnel shall not be employees of or have any

contractual relationship with the County. All personnel engaged in work under this contract shall be fully qualified and shall be authorized or permitted under State and local law to perform such services. Contractor warrants that he has obtained or will obtain Worker's Compensation Insurance for his employees working on this contract and that any subcontractors will likewise obtain Worker's Compensation Insurance for of their employees working on this contract. It is further agreed by Contractor that he shall obey all state and federal statutes, rules, and regulations which are applicable to provisions of the services called for herein. Neither Contractor nor any employee of the Contractor shall be deemed an officer, employee, or agent of the County.

ARTICLE 10 – NON-APPROPRIATIONS CLAUSE: Contractor acknowledges that the County is a governmental entity, and the contract validity is based upon the availability of public funding under its authority. In the event that public funds are unavailable and not appropriated for the performance of County's obligations under this contract, then this contract shall automatically expire without penalty to County after written notice to Contractor of the unavailability and non-appropriation of public funds. It is expressly agreed that the County shall only activate this non-appropriation provision as an emergency fiscal measure. The County shall not activate this non-appropriation provision for its convenience, to circumvent the requirements of this contract, or to enable the County to contract with another Contractor for the same supplies or services covered under this Addendum.

ARTICLE 11 – ENTIRE CONTRACT CLAUSE: The Contractor and the County have read this Contract and agree to be bound by all of its terms, and further agree that it constitutes the entire contract between the two parties and may only be modified by a written mutual contract signed by the parties. No oral agreement or oral provision outside this Contract shall have any force or effect.

ARTICLE 12 – NON-WAIVER OF ENFORCEABILITY: Failure of the County to enforce, at any time, any of the provisions of this Contract, or to request at any time performance by Contractor of any of the provisions hereof, shall in no way be construed to be a waiver of such provisions, nor in any way affect the validity of this contract or any part thereof, or the right of the County to enforce each and every provision

ARTICLE 13 – GOVERNING LAW: Both parties agree that this Contract shall be governed by the laws of the state of Arizona. The parties further agree that the jurisdiction for any legal disputes arising out of this Contract shall be the Superior Court of the State of Arizona. The parties agree that even if this Contract does not specifically reference any provision required by state or federal law, those state and federally required provisions are incorporated into this Contract by this reference as though they were specifically listed herein.

ARTICLE 14– TERM: Contract shall be effective date signed by the County Manager and expire 60 days thereafter.

ARTICLE 15 – PAYMENT/BILLING: Contractor shall be paid a not to exceed amount of **$12,000.00** for completion of the project as outlined in Article 1 - Scope of Services.

All invoices shall be submitted to Gila County Accounts Payable, 1400 E. Ash St, Globe, Arizona and include the following information:

- Purchase Order Number
- Contract Number
- Invoice Number
- Service Location
- Vendor Name and Address
- Description of Service

Any alterations to the scope of work resulting in a change in cost must have prior written approval by the County. Any unauthorized work may result in non-payment to the vendor.

Gila County employs a "Net 15" payment term for services meaning the payment will be issued fifteen (15) days from the date the County receives the invoice from the Contractor. Purchase orders sent to the Contractor reflect these terms and conditions.

The Contractor shall have a current I.R.S. W-9 form on file with the County unless not required by law. The County shall not remit payment if the Contractor does not have a current W-9.

IN WITNESS WHEREOF, Service Agreement No. 010413 has been duly executed by the parties hereinabove named, on the date and year first above written.

GILA COUNTY

Don E. McDaniel Jr., County Manager

Date: 1/6/13

FIELD LINING SYSTEMS, INC.

Signature

Kristy Leguna88

Print Name

ATTACHMENT "A"

FIELD LINING SYSTEMS, INC.
Installers of Quality Lining Systems

439 South 3rd Avenue, Avondale, AZ 85323
Bus: (623) 842-1255 Fax: (623) 930-1766
E-Mail Address: jeff@flsico.com

T & M QUOTE

FAX NO: swinters@cogila.az.us
ATTN: Sharon
Gila County Solid Waste
PHONE: 928-402-8531
BID RE: Buckhead Mesa LF _ Pond Repairs

SI. No. 1933
DATE: 14-Dec-12
(including cover page)
FLSI RE: B-007-12 Liner Quote

We are pleased to present our proposal to provide labor, material, and equipment to furnish and install a 60mil Black Smooth HDPE Liner per plans and specifications as follows:

BID ITEM	ITEM DESCRIPTION	EST QUANTITY	UNITS	UNIT PRICE	TOTAL AMOUNT
1	Mob/DeMob Including Travel:	1	LS	$ 500.00	$ 500.00
2a	60mil HDPE / Welding Rod (Approximate)	5,000	SF	$ 0.50	$ 2,500.00
2b	14 oz/sy Geotextile (Optional)	5,000	SF	$ 0.30	$ 1,500.00
3	Equipment	3	Days	$ 550.00	$ 1,650.00
4	Labor (3 - 4 Men - 8 Hrs per day)	3	Days	$ 1,700.00	$ 5,100.00
5	Per diem (3 men @ $75.00 per man)	3	Days	$ 225.00	$ 675.00
	Total:				$ 11,925.00

Total "Not to Exceed": $ 12,000.00 (For up to 3 Days)

General Notes and Clarifications:

* *All prices are FOB jobsite. Above quote is based on attached T/M Rate Sheet.*
* *Estimated repair time is unknown and will be determined based on the scope (TBD) after a visual inspection of the pond liner.*
* *Scope of work includes installing approximately 60' X 75' Patch over existing Liner extrusion welded all around the perimeter.*
* *Daily Rates are generated from T/M Rate sheet attached. Bid Items 3-5 will be billed at daily rate listed.*
* *Tax is not included. FLSI is required to collect sales tax when applicable if company is not tax exempt*
* *Work Schedule is 8 hour per day Monday thru Friday.*
* *Wages are based on Standard Rates (Non-Prevailing/Non -Union).*
* *Price quoted includes only one mobilization. Additional move-ons will be as quoted.*
* *This quotation is valid for 30 days. Orders will be processed after "Order Acknowledgement" is signed and returned or a Purchase Order is issued.*
* *All area must be clean and accessible and ready for our crew to repair.*

Thank you for the opportunity of presenting this proposal.
We look forward to being of service to you.

Best Regards,
J. Jaweed *12/14/2012*

Jafer Jaweed M. ASCE
Project Engineer

JeffieldLiningSystems.Com
** FLSI is an Equal Opportunity Employer **

(P) 623-842-1255
(F) 623-930-1766

Order Acknowledgment

By signing this Acknowledgment, Customer hereby accepts the above quotation and General Notes. Payments will be made as indicated. Field Lining Systems, Inc. reserves the right to file a preliminary lien notice as required by law.

Signature | Printed Name: DON McDANIEL, JR. | Date: 1/4/13 | P.O. #

ATTACHMENT "A"

FIELD LINING SYSTEMS, INC.
Installers of Quality Lining Systems

439 South 3rd Avenue, Avondale, AZ 85323
Bus: (623) 842-1255 Fax: (623) 930-1766
E-Mail Address: leffi@flsico.com

2012 LABOR & Equipment Rate

FAX NO: swinters@cogila.az.us

Sl. No. 1933

ATTN: Sharon
Gila County Solid Waste

DATE: 13-Dec-12

PHONE: 928-402-8531

PAGES: 1
(including cover page)

BID RE: Buckhead Mesa LF _ Pond Repairs

FLSI RE: B-007-12 Liner Quote

MANPOWER RATES

	Straight Time Rate	Over Time Rate	Double Time Rate
Operator	$60.75	$84.53	$108.31
Superintendent	$57.75	$78.41	$99.07
Technician	$54.71	$73.99	$93.26
Helper	$50.22	$67.43	$84.65

- Straight time rates are based on eight (8) hour days Monday through Friday. All hours exceeding that, including Saturdays are at over time rates. Sundays & Holidays are at double time.
- Subsistence pay at $ 75.00 per man per day ($225.00 / Day Total)
- Round trip travel per trip per man (Included)
- Additional material and misc. supplies will be at cost plus 15%.
- Any Stand-by time will be at straight time rates.
- Mobilization and demobilization at $500.00 each
- Minimum 8 hour pay per day.

EQUIPMENT RATES per Day

Truck	$75.00 / day & $0.60 / mile	$75.00	1
Generator / Airlance & Compressor		$75.00	1
Hot Shoe Welder	$55.00	$55.00	1
Extrusion Welder	$55.00	$55.00	1
Grinder		$20.00	1
Leister		$25.00	1
Vacuum Tester	$55.00	$50.00	1
Tensiometer		$75.00	1
Coupon Cutter		$20.00	1
Reach Forklift	Rental rate plus Markup		0
TOOL TRAILER		$100.00	1
	TOTAL Equipment Cost:	$550.00	

Tommie C. Martin, District I
P.O. Box 2297 Payson, AZ. 85547
(928) 474-2029

Michael A. Pastor, District II
1400 E. Ash St. Globe, AZ. 85501
(928) 425-3231 Ext. 8753

John Marcanti, District III
1400 E. Ash St. Globe, AZ. 85501
(928) 425-3231 Ext. 8511

GILA COUNTY
www.gilacountyaz.gov

Don E. McDaniel Jr., County Manager
Phone (928) 425-3231 Ext.8761

Joseph T. Heatherly, Finance Director
Phone (928) 425-3231 Ext. 8743

1400 E. Ash Street
Globe, AZ 85501

SERVICE AGREEMENT NO. 011013-1

HIGH COUNTRY DRYWALL LLC
Miscellaneous Drywall Repairs in Payson, Pine and Star Valley Areas

THIS AGREEMENT, made and entered into this 23rd day of January, **2013,** by and between Gila County, a political subdivision of the State of Arizona hereinafter designated the County, and **High Country Drywall LLC**, of the City of Payson, State of Arizona, hereinafter designated the Contractor.

WITNESSETH: The Contractor, for and in consideration of the sum to be paid him by the County, in the manner and at the time hereinafter provided, and of the other covenants and agreement's herein contained, hereby agrees, for himself, his heirs, administrators, successors, and assigns as follows:

ARTICLE 1 – SCOPE OF SERVICES: The Contractor shall provide the services and products listed in the scope of work below and shall do so in a good, workmanlike, and substantial manner and to the satisfaction of the County under the direction of the County Facilities Manager or designee.

Scope of Work: Repair or replace damaged drywall. Tape and texture per the direction of Facilities Manager or designee. Paint when requested by Facilities Manager. Building materials such as drywall, paint, baseboards and screws will be purchased by the County. Contractor is to install materials and provide own tool and labor for each project requested.

Contractor Fee's: Contractor shall submit detailed invoicing, stating what building and office the work occurred in, and a name of the County Facilities Management Employee who requested the work. Contractor will be paid a not to exceed amount of **$2,000.00.**

ARTICLE 2 – TERMINATION: The County reserves the right to terminate the Contract, in whole or in part at any time, when in the best interest of the County, without penalty or recourse. Upon receipt of the written notice, the Contractor shall stop all work as directed in the notice. If the contract is terminated, the County shall be liable only for the services rendered under this contract and accepted material received by the County before the effective date of termination.

ARTICLE 3 - INDEMNIFICATION: Contractor shall indemnify, defend, save and hold harmless the County of Gila and its officers, officials, agents, and employees (hereinafter referred to as "Indemnitee") from and against any and all claims, actions, liabilities, damages, losses, or expenses (including court costs, attorneys' fees, and costs of claim processing, investigation and litigation) (hereinafter referred to as "Claims") for bodily injury or personal injury (including death), or loss or damage to tangible or intangible property caused, or alleged to be caused, in whole or in part, by the negligent or willful acts or omissions of Contractor or any of its owners, officers, directors, agents, employees or subcontractors. This indemnity includes any claim or amount arising out of or recovered under the Workers' Compensation Law or arising out of the failure of such contractor to conform to any federal, state or local law, statute, ordinance, rule, regulation or court decree. It is the specific intention of the parties that the Indemnitee shall, in all instances, except for Claims arising solely from the negligent or willful acts or omissions of the Indemnitee, be indemnified by Contractor from and against any and all claims. It is agreed that Contractor will be responsible for primary loss investigation, defense and judgment costs where this indemnification is applicable. In consideration of the award of this contract, the Contractor agrees to waive all rights of subrogation against the County, its officers, officials, agents and employees for losses arising from the work performed by the Contractor for the County.

ARTICLE 4 – INSURANCE REQUIREMENTS: Contractor and subcontractors shall procure and maintain until all of their obligations have been discharged, including any warranty periods under this Contract are satisfied, insurance against claims for injury to persons or damage to property which may arise from or in connection with the performance of the work hereunder by the Contractor, his agents, representatives, employees or subcontractors.

The insurance requirements herein are minimum requirements for this Contract and in no way limit the indemnity covenants contained in this Contract. The County in no way warrants that the minimum limits contained herein are sufficient to protect the Contractor from liabilities that might arise out of the performance of the work under this contract by the Contractor, his agents, representatives, employees or subcontractors and Contractor is free to purchase additional insurance as may be determined necessary.

A. **MINIMUM SCOPE AND LIMITS OF INSURANCE:** Contractor shall provide coverage with limits of liability not less than those stated below.

1. **Commercial General Liability – Occurrence Form**
   Policy shall include bodily injury, property damage and broad form contractual liability coverage.
   - General Aggregate $2,000,000
   - Products – Completed Operations Aggregate $1,000,000
   - Personal and Advertising Injury $1,000,000
   - Each Occurrence $1,000,000

   a. The policy shall be endorsed to include the following additional insured language: **"The County of Gila shall be named as an additional insured with respect to liability arising out of the activities performed by, or on behalf of the Contractor".**

2. **Worker's Compensation and Employers' Liability**
   Workers' Compensation Statutory

Employers' Liability

Each Accident	$100,000
Disease – Each Employee	$100,000
Disease – Policy Limit	$500,000

a. Policy shall contain a **waiver of subrogation** against the County of Gila.

3. **Professional Liability (Errors and Omissions Liability)**

Each Claim	$1,000,000
Annual Aggregate	$2,000,000

a. In the event that the professional liability insurance required by this Contract is written on a claims-made basis, Contractor warrants that any retroactive date under the policy shall precede the effective date of this Contract; and that either continuous coverage will be maintained or an extended discovery period will be exercised for a period of two (2) years beginning at the time work under this Contract is completed.

B. **ADDITIONAL INSURANCE REQUIREMENTS:** The policies shall include, or be endorsed to include, the following provisions:

1. On insurance policies where the County of Gila is named as an additional insured, the County of Gila shall be an additional insured to the full limits of liability purchased by the Contractor even if those limits of liability are in excess of those required by this Contract.
2. The Contractor's insurance coverage shall be primary insurance and non-contributory with respect to all other available sources.
3. Coverage provided by the Contractor shall not be limited to the liability assumed under the indemnification provisions of this Contract.

C. **NOTICE OF CANCELLATION:** Each insurance policy required by the insurance provisions of this Contract shall provide the required coverage and shall not be suspended, voided, canceled, reduced in coverage or endorsed to lower limits except after thirty (30) days prior written notice has been given to the County. Such notice shall be sent directly to **Gila County Purchasing Department, 1400 E. Ash St., Globe, AZ, 85501** or and shall be sent by certified mail, return receipt requested.

D. **ACCEPTABILITY OF INSURERS:** Insurance is to be placed with insurers duly licensed or approved unlicensed companies in the state of Arizona and with an "A.M. Best" rating of not less than B+ VI. The County in no way warrants that the above-required minimum insurer rating is sufficient to protect the Contractor from potential insurer insolvency.

E. **VERIFICATION OF COVERAGE:** Contractor shall furnish the County with certificates of insurance (ACORD form or equivalent approved by the County) as required by this Contract. The certificates for each insurance policy are to be signed by a person authorized by that insurer to bind coverage on its behalf.

All certificates and endorsements are to be received and approved by the County before work commences. Each insurance policy required by this Contract must be in effect at or prior to commencement of work under this Contract and remain in effect for the duration of the project. Failure to maintain the insurance policies as required by this Contract or to provide evidence of renewal is a material breach of contract.

All certificates required by this Contract shall be sent directly to Jeannie Sgroi at **Gila County Finance Department, 1400 E. Ash St., Globe, AZ, 85501** or email to dsgroi@co.gila.az.us, The County project/contract number and project description shall be noted on the certificate of insurance. The County reserves the right to require complete, certified copies of all insurance policies required by this Contract at any time.

F. **SUBCONTRACTORS:** Contractors' certificate(s) shall include all subcontractors as additional insured's under its policies **or** Contractor shall furnish to the County separate certificates and endorsements for each subcontractor. All coverage's for subcontractors shall be subject to the minimum requirements identified above.

G. **APPROVAL:** Any modification or variation from the insurance requirements in this Contract shall be made by the County Attorney, whose decision shall be final. Such action will not require a formal Contract amendment, but may be made by administrative action.

ARTICLE 5 – LEGAL ARIZONA WORKERS ACT COMPLIANCE: Contractor hereby warrants that it will at all times during the term of this Contract comply with all federal immigration laws applicable to Contractor's employment of its employees, and with the requirements of A.R.S. § 23-214 (A) (together the "State and Federal Immigration Laws"). Contractor shall further ensure that each subcontractor who performs any work for Contractor under this contract likewise complies with the State and Federal Immigration Laws. County shall have the right at any time to inspect the books and records of Contractor and any subcontractor in order to verify such party's compliance with the State and Federal Immigration Laws.

Any breach of Contractor's or any subcontractor's warranty of compliance with the State and Federal Immigration Laws, or of any other provision of this section, shall be deemed to be a material breach of this Contract subjecting Contractor to penalties up to and including suspension or termination of this Contract. If the breach is by a subcontractor, and the subcontract is suspended or terminated as a result, Contractor shall be required to take such steps as may be necessary to either self-perform the services that would have been provided under the subcontract or retain a replacement subcontractor as soon as possible so as not to delay project completion.

Contractor shall advise each subcontractor of County's rights, and the subcontractor's obligations, under this Article by including a provision in each subcontract substantially in the following form: "Subcontractor hereby warrants that it will at all times during the term of this contract comply with all federal immigration laws applicable to Subcontractor's employees, and with the requirements of A.R.S. § 23-214 (A). Subcontractor further agrees that County may inspect the Subcontractor's books and records to insure that Subcontractor is in compliance with these requirements. Any breach of this paragraph by Subcontractor will be deemed to be a material breach of this contract subjecting Subcontractor to penalties up to and including suspension or termination of this contract."

Any additional costs attributable directly or indirectly to remedial action under this Article shall be the responsibility of Contractor. In the event that remedial action under this Article results in delay to one or more tasks on the critical path of Contractor's approved construction or critical milestones schedule, such period of delay shall be deemed excusable delay for which Contractor shall be entitled to an extension of time, but not costs.

ARTICLE 6 – LAWS AND ORDINANCES: This agreement shall be enforced under the laws of the State of Arizona. Contractor shall maintain in current status all Federal, State and Local licenses and permits required for the operation of the business conducted by the Contractor. The Contractor shall comply with the applicable provisions of the Americans with Disabilities Act (Public Law 101-336, 42 U.S.C. 12101-12213) and applicable federal regulations under the Act.

ARTICLE 7– ANTI-TERRORISM WARRANTY: Pursuant to A.R.S. § 35-393.06(B) and 35-301.06(A) the Contractor certifies that it does not have scrutinized business operations in Iran or Sudan and that they are in compliance with the Export Administration Act and not on the Excluded Parties List.

ARTICLE 8 – CANCELLATION: This agreement is subject to cancellation pursuant to A.R.S. §38-511. If the Agreement is terminated, the county shall be liable only for payment for services rendered and accepted material received by the County before the effective date of termination.

ARTICLE 9 – RELATIONSHIP OF THE PARTIES: Contractor is an independent contractor of the County. Contractor represents that he has or will secure, at his own expense, all personnel required in performing the services under this contract. Such personnel shall not be employees of or have any contractual relationship with the County. All personnel engaged in work under this contract shall be fully qualified and shall be authorized or permitted under State and local law to perform such services. Contractor warrants that he has obtained or will obtain Worker's Compensation Insurance for his employees working on this contract and that any subcontractors will likewise obtain Worker's Compensation Insurance for of their employees working on this contract. It is further agreed by Contractor that he shall obey all state and federal statutes, rules, and regulations which are applicable to provisions of the services called for herein. Neither Contractor nor any employee of the Contractor shall be deemed an officer, employee, or agent of the County.

ARTICLE 10 – NON-APPROPRIATIONS CLAUSE: Contractor acknowledges that the County is a governmental entity, and the contract validity is based upon the availability of public funding under its authority. In the event that public funds are unavailable and not appropriated for the performance of County's obligations under this contract, then this contract shall automatically expire without penalty to County after written notice to Contractor of the unavailability and non-appropriation of public funds. It is expressly agreed that the County shall only activate this non-appropriation provision as an emergency fiscal measure. The County shall not activate this non-appropriation provision for its convenience, to circumvent the requirements of this contract, or to enable the County to contract with another Contractor for the same supplies or services covered under this Addendum.

ARTICLE 11 – ENTIRE CONTRACT CLAUSE: The Contractor and the County have read this Contract and agree to be bound by all of its terms, and further agree that it constitutes the entire contract between the two parties and may only be modified by a written mutual contract signed by the parties. No oral agreement or oral provision outside this Contract shall have any force or effect.

ARTICLE 12 – NON-WAIVER OF ENFORCEABILITY: Failure of the County to enforce, at any time, any of the provisions of this Contract, or to request at any time performance by Contractor of any of the provisions hereof, shall in no way be construed to be a waiver of such provisions, nor in any way affect the validity of this contract or any part thereof, or the right of the County to enforce each and every provision

ARTICLE 13 – GOVERNING LAW: Both parties agree that this Contract shall be governed by the laws of the state of Arizona. The parties further agree that the jurisdiction for any legal disputes arising out of this Contract shall be the Superior Court of the State of Arizona. The parties agree that even if this Contract does not specifically reference any provision required by state or federal law, those state and federally required provisions are incorporated into this Contract by this reference as though they were specifically listed herein.

ARTICLE 14– TERM: The term of the agreement shall commence on **the date contract is signed by the County Manager,** and continue in full force and effect for one calendar year from the date signed by County Manager, unless terminated, canceled or extended as otherwise provided herein. The Contractor agrees that Gila County shall have the right, at its sole option, to renew the agreement for two (2) additional one (1) year periods. In the event the County exercises such a right, all terms, conditions and provisions of the original agreement shall remain the same and apply during the renewal period.

ARTICLE 15 – PAYMENT/BILLING: Contractor shall be paid a fee not to exceed **$ 2,000.00** for completion of the project as outlined in Article 1 - Scope of Services.

All invoices shall be submitted to Gila County Accounts Payable, 1400 E. Ash St, Globe, Arizona and include the following information:

- Purchase Order Number
- Contract Number
- Invoice Number
- Service Location
- Vendor Name and Address
- Description of Service

Any alterations to the scope of work resulting in a change in cost must have prior written approval by the County. Any unauthorized work may result in non-payment to the vendor.

Gila County employs a "Net 15" payment term for services meaning the payment will be issued fifteen (15) days from the date the County receives the invoice from the Contractor. Purchase orders sent to the Contractor reflect these terms and conditions.

The Contractor shall have a current I.R.S. W-9 form on file with the County unless not required by law. The County shall not remit payment if the Contractor does not have a current W-9.

IN WITNESS WHEREOF, Service Agreement No. 011013-1 has been duly executed by the parties hereinabove named, on the date and year first above written.

GILA COUNTY

Don E. McDaniel Jr., County Manager

Date: 1/23/12

High Country Drywall, LLC

Signature

Jim Scholl

Print Name

sentinel

APPENDIX A

Customer Name: Gila County

Street Address: 1400 E Ash Street

City, State, Zip: Globe, AZ 85501

The Agreement referenced below by and between Sentinel Technologies, Inc., (Contractor) with principal offices at 2550 Warrenville Road, Downers Grove, Illinois 60515, and Gila County (Customer) with principal offices at 1400 E. Ash Street, Globe, AZ 85501 is hereby amended to include the following:

Commencement Date | Agreement No. | Addendum No. 018

Resale of Cisco SMARTnet maintenance as outlined in attached Appendix B.

Attachment "A" by mention is made a binding part of this agreement as set forth therein.

CUSTOMER:
Gila County

Signature: _____

Printed Name: Don E. McDaniel, Jr.

Title: County Manager

Date: 1/23/13

CONTRACTOR:
Sentinel Technologies, Inc.

Signature: _____

Printed Name: Brad Faubion

Title: GM-PHX

Date: 1-15-13

sentinel

APPENDIX B

Customer Name: Gila County

Street Address: 1400 E Ash Street

City, State, Zip: Globe, AZ 85501

The Agreement referenced below by and between Sentinel Technologies, Inc., (Contractor) with principal offices at 2550 Warrenville Road, Downers Grove, Illinois 60515, and Gila County (Customer) with principal offices at 1400 E. Ash Street, Globe, AZ 85501 is hereby amended to include the following:

Commencement Date | Agreement No. | Addendum No. 018

PROJECT SCHEDULE

Customer agrees to pay Contractor for services in accordance with the following schedule:

Gila County						
Part Number	**Serial Number**	**Begin Date**	**End Date**	**Qty**	**Unit**	**Ext. Price**
Cisco direct, Advance Replacment, NBD coverage						
ASA-SSM-AIP-20-K9=	JAF1452BBQM	20-Jan-13	19-Jan-14	1	$ 2,599	$ 2,599
					Total	**2,599**

Terms: Net 30 days. Cisco equipment maintenance contracts are for a twelve (12) month term. No deletions or cancellations are allowed.

Attachment "A" by mention is made a binding part of this agreement as set forth therein.

This quote is valid for 30 days from 12 / 21 / 2012.

CUSTOMER:
Gila County

Signature: [signature]

Printed Name: Don E. McDaniel, Jr.

Title: County Manager

Date: 1/23/13

P.O. #:

CONTRACTOR:
Sentinel Technologies, Inc.

Signature: [signature]

Printed Name: Brad Faubion

Title: GM-Phx

Date: 1-14-13

ATTACHMENT "A"

Anti-Terrorism Warranty: Pursuant to **A.R.S. §35-393.06(B) and 35-391.06(A)** the Contractor certifies that it does not have scrutinized business operations in Iran or Sudan and that they are in compliance with the Export Administration Act and not on the Excluded Parties List.

Legal Arizona Workers Act Compliance: Firm hereby warrants that it will at all times during the term of this Contract comply with all federal immigration laws applicable to Firm's employment of its employees, and with the requirements of A.R.S. § 23-214 (A) (together the "State and Federal Immigration Laws"). Firm shall further ensure that each subcontractor who performs any work for Firm under this contract likewise complies with the State and Federal Immigration Laws.

County shall have the right at any time to inspect the books and records of Firm and any subcontractor in order to verify such party's compliance with the State and Federal Immigration Laws.

Any breach of Firm's or any subcontractor's warranty of compliance with the State and Federal Immigration Laws, or of any other provision of this section, shall be deemed to be a material breach of this Contract subjecting Firm to penalties up to and including suspension or termination of this Contract. If the breach is by a subcontractor, and the subcontract is suspended or terminated as a result, Firm shall be required to take such steps as may be necessary to either self-perform the services that would have been provided under the subcontract or retain a replacement subcontractor as soon as possible so as not to delay project completion.

Firm shall advise each subcontractor of County's rights, and the subcontractor's obligations, under this Article by including a provision in each subcontract substantially in the following form: "Subcontractor hereby warrants that it will at all times during the term of this contract comply with all federal immigration laws applicable to Subcontractor's employees, and with the requirements of A.R.S. § 23-214 (A). Subcontractor further agrees that County may inspect the Subcontractor's books and records to insure that Subcontractor is in compliance with these requirements. Any breach of this paragraph by Subcontractor will be deemed to be a material breach of this contract subjecting Subcontractor to penalties up to and including suspension or termination of this contract."

Cancellation: This agreement is subject to cancellation pursuant to A.R.S. §38.511.

GILA COUNTY:

GILA COUNTY MANAGER

Don E. McDaniel Jr.

Date 1/23/13

SENTINEL TECHNOLOGIES, INC.

Individual Authorized to Sign

Brad Faubion

Print Name

GM - Phx

Title

Tommie C. Martin, District I
P.O. Box 2297 Payson, AZ. 85547
(928) 474-2029

Michael A. Pastor, District II
1400 E. Ash St. Globe, AZ. 85501
(928) 425-3231 Ext. 8753

John Marcanti, District III
1400 E. Ash St. Globe, AZ. 85501
(928) 425-3231 Ext. 8511

GILA COUNTY
www.gilacountyaz.gov

Don E. McDaniel Jr., County Manager
Phone (928) 425-3231 Ext.8761

Joseph T. Heatherly, Finance Director
Phone (928) 425-3231 Ext. 8743
Fax: (928)425-7056

1400 E. Ash Street
Globe, AZ 85501

SERVICE AGREEMENT NO. 011713-1

REPLACE CARPETING IN PAYSON CAP OFFICE

THIS AGREEMENT, made and entered into this 23RD day of JANUARY, **2013**, by and between Gila County, a political subdivision of the State of Arizona hereinafter designated the County, and **MLV Flooring LLC**, of the City of Payson, State of Arizona, hereinafter designated the Contractor.

WITNESSETH: The Contractor, for and in consideration of the sum to be paid him by the County, in the manner and at the time hereinafter provided, and of the other covenants and agreement's herein contained, hereby agrees, for himself, his heirs, administrators, successors, and assigns as follows:

ARTICLE 1 – SCOPE OF SERVICES: The Contractor shall provide for the services described in the scope of work below, in a good and workmanlike and substantial manner and to the satisfaction of the County under the direction of the Public Works Manager or designee.

All work performed by the Contractor shall be completed to local codes and regulation per Gila County and the State of Arizona.

Scope of Work: Refer to attached Attachment "A" by mention made a binding part of this agreement as set forth herein.

Contractor Fee's: Refer to Attachment "A" by mention made a binding part of this agreement as set forth herein.

ARTICLE 2 – TERMINATION: The County reserves the right to terminate the Contract, in whole or in part at any time, when in the best interest of the County, without penalty or recourse. Upon receipt of the written notice, the Contractor shall stop all work as directed in the notice. If the contract is terminated, the County shall be liable only for the services rendered under this contract and accepted material received by the County before the effective date of termination.

ARTICLE 3 - INDEMNIFICATION: Contractor shall indemnify, defend, save and hold harmless the County of Gila and its officers, officials, agents, and employees (hereinafter referred to as "Indemnitee") from and against any and all claims, actions, liabilities, damages, losses, or expenses (including court costs, attorneys' fees, and costs of claim processing, investigation and litigation) (hereinafter referred to as "Claims") for bodily injury or personal injury (including death), or loss or damage to tangible or intangible property caused, or alleged to be caused, in whole or in part, by the negligent or willful acts or omissions of Contractor or any of its owners, officers, directors, agents, employees or subcontractors. This indemnity includes any claim or amount arising out of or recovered under the Workers' Compensation Law or arising out of the failure of such contractor to conform to any federal, state or local law, statute, ordinance, rule, regulation or court decree. It is the specific intention of the parties that the Indemnitee shall, in all instances, except for Claims arising solely from the negligent or willful acts or omissions of the Indemnitee, be indemnified by Contractor from and against any and all claims. It is agreed that Contractor will be responsible for primary loss investigation, defense and judgment costs where this indemnification is applicable. In consideration of the award of this contract, the Contractor agrees to waive all rights of subrogation against the County, its officers, officials, agents and employees for losses arising from the work performed by the Contractor for the County.

ARTICLE 4 – INSURANCE REQUIREMENTS: Contractor and subcontractors shall procure and maintain until all of their obligations have been discharged, including any warranty periods under this Contract are satisfied, insurance against claims for injury to persons or damage to property which may arise from or in connection with the performance of the work hereunder by the Contractor, his agents, representatives, employees or subcontractors.

The insurance requirements herein are minimum requirements for this Contract and in no way limit the indemnity covenants contained in this Contract. The County in no way warrants that the minimum limits contained herein are sufficient to protect the Contractor from liabilities that might arise out of the performance of the work under this contract by the Contractor, his agents, representatives, employees or subcontractors and Contractor is free to purchase additional insurance as may be determined necessary.

A. **MINIMUM SCOPE AND LIMITS OF INSURANCE:** Contractor shall provide coverage with limits of liability not less than those stated below.

1. **Commercial General Liability – Occurrence Form**
   Policy shall include bodily injury, property damage and broad form contractual liability coverage.
   - General Aggregate $2,000,000
   - Products – Completed Operations Aggregate $1,000,000
   - Personal and Advertising Injury $1,000,000
   - Each Occurrence $1,000,000

   a. The policy shall be endorsed to include the following additional insured language: **"The County of Gila shall be named as an additional insured with respect to liability arising out of the activities performed by, or on behalf of the Contractor".**

2. **Worker's Compensation and Employers' Liability**

Workers' Compensation	Statutory
Employers' Liability	
Each Accident	$100,000
Disease – Each Employee	$100,000
Disease – Policy Limit	$500,000

   a. Policy shall contain a **waiver of subrogation** against the County of Gila.

3. **Professional Liability (Errors and Omissions Liability)**

Each Claim	$1,000,000
Annual Aggregate	$2,000,000

   a. In the event that the professional liability insurance required by this Contract is written on a claims-made basis, Contractor warrants that any retroactive date under the policy shall precede the effective date of this Contract; and that either continuous coverage will be maintained or an

extended discovery period will be exercised for a period of two (2) years beginning at the time work under this Contract is completed.

B. **ADDITIONAL INSURANCE REQUIREMENTS:** The policies shall include, or be endorsed to include, the following provisions:

1. On insurance policies where the County of Gila is named as an additional insured, the County of Gila shall be an additional insured to the full limits of liability purchased by the Contractor even if those limits of liability are in excess of those required by this Contract.
2. The Contractor's insurance coverage shall be primary insurance and non-contributory with respect to all other available sources.
3. Coverage provided by the Contractor shall not be limited to the liability assumed under the indemnification provisions of this Contract.

C. **NOTICE OF CANCELLATION:** Each insurance policy required by the insurance provisions of this Contract shall provide the required coverage and shall not be suspended, voided, canceled, reduced in coverage or endorsed to lower limits except after thirty (30) days prior written notice has been given to the County. Such notice shall be sent directly to **Gila County Purchasing Department, Attention: Jeannie Sgroi, 1400 E. Ash St., Globe, AZ, 85501** and shall be sent by certified mail, return receipt requested.

D. **ACCEPTABILITY OF INSURERS:** Insurance is to be placed with insurers duly licensed or approved unlicensed companies in the state of Arizona and with an "A.M. Best" rating of not less than B+ VI. The County in no way warrants that the above-required minimum insurer rating is sufficient to protect the Contractor from potential insurer insolvency.

E. **VERIFICATION OF COVERAGE:** Contractor shall furnish the County with certificates of insurance (ACORD form or equivalent approved by the County) as required by this Contract. The certificates for each insurance policy are to be signed by a person authorized by that insurer to bind coverage on its behalf.

All certificates and endorsements are to be received and approved by the County before work commences. Each insurance policy required by this Contract must be in effect at or prior to commencement of work under this Contract and remain in effect for the duration of the project. Failure to maintain the insurance policies as required by this Contract or to provide evidence of renewal is a material breach of contract.

All certificates required by this Contract shall be sent directly to **Gila County Purchasing Department, Attention: Jeannie Sgroi, 1400 E. Ash St., Globe, AZ, 85501** or via email to Ms. Sgroi at dsgroi@co.gila.az.us. The County project/contract number and project description shall be noted on the certificate of insurance. The County reserves the right to require complete, certified copies of all insurance policies required by this Contract at any time.

F. **SUBCONTRACTORS:** Contractors' certificate(s) shall include all subcontractors as additional insured's under its policies or Contractor shall furnish to the County separate certificates and endorsements for each subcontractor. All coverage's for subcontractors shall be subject to the minimum requirements identified above.

G. **APPROVAL:** Any modification or variation from the insurance requirements in this Contract shall be made by the County Attorney, whose decision shall be final. Such action will not require a formal Contract amendment, but may be made by administrative action.

ARTICLE 5 – LEGAL ARIZONA WORKERS ACT COMPLIANCE: Contractor hereby warrants that it will at all times during the term of this Contract comply with all federal immigration laws applicable to Contractor's employment of its employees, and with the requirements of A.R.S. § 23-214 (A) (together the "State and Federal Immigration Laws"). Contractor shall further ensure that each subcontractor who performs any work for Contractor under this contract likewise complies with the State and Federal Immigration Laws. County shall have the right at any time to inspect the books and records of Contractor and any subcontractor in order to verify such party's compliance with the State and Federal Immigration Laws.

Any breach of Contractor's or any subcontractor's warranty of compliance with the State and Federal Immigration Laws, or of any other provision of this section, shall be deemed to be a material breach of this Contract subjecting Contractor to penalties up to and including suspension or termination of this Contract. If the breach is by a subcontractor, and the subcontract is suspended or terminated as a result, Contractor shall be required to take such steps as may be necessary to either self-perform the services that would have been provided under the subcontract or retain a replacement subcontractor as soon as possible so as not to delay project completion.

Contractor shall advise each subcontractor of County's rights, and the subcontractor's obligations, under this Article by including a provision in each subcontract substantially in the following form: "Subcontractor hereby warrants that it will at all times during the term of this contract comply with all federal immigration laws applicable to Subcontractor's employees, and with the requirements of A.R.S. § 23-214 (A). Subcontractor further agrees that County may inspect the Subcontractor's books and records to insure that Subcontractor is in compliance with these requirements. Any breach of this paragraph by Subcontractor will be deemed to be a material breach of this contract subjecting Subcontractor to penalties up to and including suspension or termination of this contract."

Any additional costs attributable directly or indirectly to remedial action under this Article shall be the responsibility of Contractor. In the event that remedial action under this Article results in delay to one or more tasks on the critical path of Contractor's approved construction or critical milestones schedule, such period of delay shall be deemed excusable delay for which Contractor shall be entitled to an extension of time, but not costs.

ARTICLE 6 – LAWS AND ORDINANCES: This agreement shall be enforced under the laws of the State of Arizona. Contractor shall maintain in current status all Federal, State and Local licenses and permits required for the operation of the business conducted by the Contractor. The Contractor shall comply with the applicable provisions of the Americans with Disabilities Act (Public Law 101-336, 42 U.S.C. 12101-12213) and applicable federal regulations under the Act.

ARTICLE 7– ANTI-TERRORISM WARRANTY: Pursuant to A.R.S. § 35-393.06(B) and 35-301.06(A) the Contractor certifies that it does not have scrutinized business operations in Iran or Sudan and that they are in compliance with the Export Administration Act and not on the Excluded Parties List.

ARTICLE 8 – CANCELLATION: This agreement is subject to cancellation pursuant to A.R.S. §38-511. If the Agreement is terminated, the county shall be liable only for payment for services rendered and accepted material received by the County before the effective date of termination.

ARTICLE 9 – RELATIONSHIP OF THE PARTIES: Contractor is an independent contractor of the County. Contractor represents that he has or will secure, at his own expense, all personnel required in performing the services under this contract. Such personnel shall not be employees of or have any contractual relationship with the County. All personnel engaged in work under this contract shall be fully qualified and shall be authorized or permitted under State and local law to perform such services. Contractor warrants that he has obtained or will obtain Worker's Compensation Insurance for his employees working on this contract and that any subcontractors will likewise obtain Worker's Compensation Insurance for of their employees working on this contract. It is further agreed by Contractor that he shall obey all state and federal statutes,

rules, and regulations which are applicable to provisions of the services called for herein. Neither Contractor nor any employee of the Contractor shall be deemed an officer, employee, or agent of the County.

ARTICLE 10 – NON-APPROPRIATIONS CLAUSE: Contractor acknowledges that the County is a governmental entity, and the contract validity is based upon the availability of public funding under its authority. In the event that public funds are unavailable and not appropriated for the performance of County's obligations under this contract, then this contract shall automatically expire without penalty to County after written notice to Contractor of the unavailability and non-appropriation of public funds. It is expressly agreed that the County shall only activate this non-appropriation provision as an emergency fiscal measure. The County shall not activate this non-appropriation provision for its convenience, to circumvent the requirements of this contract, or to enable the County to contract with another Contractor for the same supplies or services covered under this Addendum.

ARTICLE 11 – ENTIRE CONTRACT CLAUSE: The Contractor and the County have read this Contract and agree to be bound by all of its terms, and further agree that it constitutes the entire contract between the two parties and may only be modified by a written mutual contract signed by the parties. No oral agreement or oral provision outside this Contract shall have any force or effect.

ARTICLE 12 – NON-WAIVER OF ENFORCEABILITY: Failure of the County to enforce, at any time, any of the provisions of this Contract, or to request at any time performance by Contractor of any of the provisions hereof, shall in no way be construed to be a waiver of such provisions, nor in any way affect the validity of this contract or any part thereof, or the right of the County to enforce each and every provision

ARTICLE 13 – GOVERNING LAW: Both parties agree that this Contract shall be governed by the laws of the state of Arizona. The parties further agree that the jurisdiction for any legal disputes arising out of this Contract shall be the Superior Court of the State of Arizona. The parties agree that even if this Contract does not specifically reference any provision required by state or federal law, those state and federally required provisions are incorporated into this Contract by this reference as though they were specifically listed herein.

ARTICLE 14– TERM: Contract shall be effective date signed by the County Manager and expires 60 days thereafter.

ARTICLE 15 – PAYMENT/BILLING: Contractor shall be paid a flat fee of **$858.92** for completion of the projects as outlined in the Scope of Services.

All invoices shall be submitted to Gila County Accounts Payable, 1400 E. Ash St, Globe, Arizona and include the following information:

- Purchase Order Number
- Contract Number
- Invoice Number
- Service Location
- Vendor Name and Address
- Description of Service

Any alterations to the scope of work resulting in a change in cost must have prior written approval by the County. Any unauthorized work may result in non-payment to the vendor.

Gila County employs a "Net 15" payment term for services meaning the payment will be issued fifteen (15) days from the date the County receives the invoice from the Contractor. Purchase orders sent to the Contractor reflect these terms and conditions.

The Contractor shall have a current I.R.S. W-9 form on file with the County unless not required by law. The County shall not remit payment if the Contractor does not have a current W-9.

***IN WITNESS WHEREOF, Service Agreement No. 011713** has been duly executed by the parties hereinabove named, on the date and year first above written.*

GILA COUNTY

Don E. McDaniel, Jr., County Manager

Date: 6/23/13

MLV FLOORING LLC

Signature

ATTACHMENT "A"
Carpet Bid

MLV FLOORING LLC

928-468-8811
928-468-8882 FAX
111 W BONITA ST

Estimate

Date	Estimate #
9/20/2012	10549-B

Name / Address
GILA COUNTY FINANCE DEPT ATTN: Accounts Payable 1400 E Ash Street Globe Az 85501

			Project
			CAP OFFICE
Description	Qty	Cost	Total
CAP OFFICE			
ALARCO /HOMERUN COLOR ROCKY TOP 12X15.5	20.66	10.00	206.60T
COMMERCIAL PAD	20.66	4.00	82.64T
Install Carpet MINIMUM		150.00	150.00
R&R FURNITURE AND DEMO CARPET		250.00	250.00
4" COVEBASE	45	1.50	67.50T
Install covebase Lineal Foot	45	1.50	67.50
STATE SALES TAX		9.72%	34.68
		Total	$858.92

Customer Signature _____

From:Payson Health 928 474 7069 12/11/2012 16:40 #533 P.003/003

Tommie C. Martin, District I
P.O. Box 2297 Payson, AZ. 85547
(928) 474-2029

Michael A. Pastor, District II
1400 E. Ash St. Globe, AZ. 85501
(928) 425-3231 Ext. 8753

John Marcantl, District III
1400 E. Ash St. Globe, AZ. 85501
(928) 425-3231 Ext. 8511

GILA COUNTY
www.gilacountyaz.gov

Don E. McDaniel Jr., County Manager
Phone (928) 425-3231 Ext.8761

Joseph T. Heatherly, Finance Director
Phone (928) 425-3231 Ext. 8743

1400 E. Ash Street
Globe, AZ 85501

SERVICE AGREEMENT NO. 011513-2

WEATHERIZATION PROJECT NO. HH#5924

THIS AGREEMENT, made and entered into this 23 RD day of JANUARY, **2013**, by and between Gila County, a political subdivision of the State of Arizona hereinafter designated the County, and Pointe Companies, Inc., of the City of Lakeside, State of Arizona, hereinafter designated the Contractor.

WITNESSETH: The Contractor, for and in consideration of the sum to be paid him by the County, in the manner and at the time hereinafter provided, and of the other covenants and agreement's herein contained, hereby agrees, for himself, his heirs, administrators, successors, and assigns as follows:

ARTICLE 1 – SCOPE OF SERVICES: The Contractor shall provide the services and products listed in the Scope of Work below for Weatherization Project HH#5924, and shall do so in a good, workmanlike, and substantial manner and to the satisfaction of the County under the direction of the Housing Services Manager or designee.

All work performed by the Contractor shall be completed to local codes and regulation per Gila County and the State of Arizona and consistent with all Weatherization guidelines.

Scope of Work: Refer to attached Attachment "A" by mention made a binding part of this agreement as set forth herein.

Contractor Fee's: Refer to Attachment "A" by mention made a binding part of this agreement as set forth herein. Contractor will be paid fifty (50) percent upon presentation of an invoice at the beginning of the project, and the remaining fifty (50) percent upon presentation of an invoice upon completion of the project.

ARTICLE 2 – TERMINATION: The County reserves the right to terminate the Contract, in whole or in part at any time, when in the best interest of the County, without penalty or recourse. Upon receipt of the written notice, the Contractor shall stop all work as directed in the notice. If the contract is terminated, the County shall be liable only for the services rendered under this contract and accepted material received by the County before the effective date of termination.

ARTICLE 3 - INDEMNIFICATION: Contractor shall indemnify, defend, save and hold harmless the County of Gila and its officers, officials, agents, and employees (hereinafter referred to as "Indemnitee") from and against any and all claims, actions, liabilities, damages, losses, or expenses (including court costs, attorneys' fees, and costs of claim processing, investigation and litigation) (hereinafter referred to as "Claims") for bodily injury or personal injury (including death), or loss or damage to tangible or intangible property caused, or alleged to be caused, in whole or in part, by the negligent or willful acts or omissions of Contractor or any of its owners, officers, directors, agents, employees or subcontractors. This indemnity includes any claim or amount arising out of or recovered under the Workers' Compensation Law or arising out of the failure of such contractor to conform to any federal, state or local law, statute, ordinance, rule, regulation or court decree. It is the specific intention of the parties that the Indemnitee shall, in all instances, except for Claims arising solely from the negligent or willful acts or omissions of the Indemnitee, be indemnified by Contractor from and against any and all claims. It is agreed that Contractor will be responsible for primary loss investigation, defense and judgment costs where this indemnification is applicable. In consideration of the award of this contract, the Contractor agrees to waive all rights of subrogation against the County, its officers, officials, agents and employees for losses arising from the work performed by the Contractor for the County.

ARTICLE 4 – INSURANCE REQUIREMENTS: Contractor and subcontractors shall procure and maintain until all of their obligations have been discharged, including any warranty periods under this Contract are satisfied, insurance against claims for injury to persons or damage to property which may arise from or in connection with the performance of the work hereunder by the Contractor, his agents, representatives, employees or subcontractors.

The insurance requirements herein are minimum requirements for this Contract and in no way limit the indemnity covenants contained in this Contract. The County in no way warrants that the minimum limits contained herein are sufficient to protect the Contractor from liabilities that might arise out of the performance of the work under this contract by the Contractor, his agents, representatives, employees or subcontractors and Contractor is free to purchase additional insurance as may be determined necessary.

A. **MINIMUM SCOPE AND LIMITS OF INSURANCE:** Contractor shall provide coverage with limits of liability not less than those stated below.

1. **Commercial General Liability – Occurrence Form**
   Policy shall include bodily injury, property damage and broad form contractual liability coverage.
   - General Aggregate $2,000,000
   - Products – Completed Operations Aggregate $1,000,000
   - Personal and Advertising Injury $1,000,000
   - Each Occurrence $1,000,000

   a. The policy shall be endorsed to include the following additional insured language: **"The County of Gila shall be named as an additional insured with respect to liability arising out of the activities performed by, or on behalf of the Contractor".**

2. **Worker's Compensation and Employers' Liability**

Workers' Compensation	Statutory
Employers' Liability	
Each Accident	$100,000
Disease – Each Employee	$100,000
Disease – Policy Limit	$500,000

   a. Policy shall contain a **waiver of subrogation** against the County of Gila.

3. **Professional Liability (Errors and Omissions Liability)**

Each Claim	$1,000,000
Annual Aggregate	$2,000,000

a. In the event that the professional liability insurance required by this Contract is written on a claims-made basis, Contractor warrants that any retroactive date under the policy shall precede the effective date of this Contract; and that either continuous coverage will be maintained or an extended discovery period will be exercised for a period of two (2) years beginning at the time work under this Contract is completed.

B. **ADDITIONAL INSURANCE REQUIREMENTS:** The policies shall include, or be endorsed to include, the following provisions:

1. On insurance policies where the County of Gila is named as an additional insured, the County of Gila shall be an additional insured to the full limits of liability purchased by the Contractor even if those limits of liability are in excess of those required by this Contract.
2. The Contractor's insurance coverage shall be primary insurance and non-contributory with respect to all other available sources.
3. Coverage provided by the Contractor shall not be limited to the liability assumed under the indemnification provisions of this Contract.

C. **NOTICE OF CANCELLATION:** Each insurance policy required by the insurance provisions of this Contract shall provide the required coverage and shall not be suspended, voided, canceled, reduced in coverage or endorsed to lower limits except after thirty (30) days prior written notice has been given to the County. Such notice shall be sent directly to **Gila County Purchasing Department, 1400 E. Ash St., Globe, AZ, 85501** or and shall be sent by certified mail, return receipt requested.

D. **ACCEPTABILITY OF INSURERS:** Insurance is to be placed with insurers duly licensed or approved unlicensed companies in the state of Arizona and with an "A.M. Best" rating of not less than B+ VI. The County in no way warrants that the above-required minimum insurer rating is sufficient to protect the Contractor from potential insurer insolvency.

E. **VERIFICATION OF COVERAGE:** Contractor shall furnish the County with certificates of insurance (ACORD form or equivalent approved by the County) as required by this Contract. The certificates for each insurance policy are to be signed by a person authorized by that insurer to bind coverage on its behalf.

All certificates and endorsements are to be received and approved by the County before work commences. Each insurance policy required by this Contract must be in effect at or prior to commencement of work under this Contract and remain in effect for the duration of the project. Failure to maintain the insurance policies as required by this Contract or to provide evidence of renewal is a material breach of contract.

All certificates required by this Contract shall be sent directly to **Gila County Purchasing Department, 1400 E. Ash St., Globe, AZ, 85501** or email to dsgrpi@co.gila.az.us. The County project/contract number and project description shall be noted on the certificate of insurance. The County reserves the right to require complete, certified copies of all insurance policies required by this Contract at any time.

F. **SUBCONTRACTORS:** Contractors' certificate(s) shall include all subcontractors as additional insured's under its policies or Contractor shall furnish to the County separate certificates and endorsements for each subcontractor. All coverage's for subcontractors shall be subject to the minimum requirements identified above.

G. **APPROVAL:** Any modification or variation from the insurance requirements in this Contract shall be made by the County Attorney, whose decision shall be final. Such action will not require a formal Contract amendment, but may be made by administrative action.

ARTICLE 5 – LEGAL ARIZONA WORKERS ACT COMPLIANCE: Contractor hereby warrants that it will at all times during the term of this Contract comply with all federal immigration laws applicable to Contractor's employment of its employees, and with the requirements of A.R.S. § 23-214 (A) (together the "State and Federal Immigration Laws"). Contractor shall further ensure that each subcontractor who performs any work for Contractor under this contract likewise complies with the State and Federal Immigration Laws. County shall have the right at any time to inspect the books and records of Contractor and any subcontractor in order to verify such party's compliance with the State and Federal Immigration Laws.

Any breach of Contractor's or any subcontractor's warranty of compliance with the State and Federal Immigration Laws, or of any other provision of this section, shall be deemed to be a material breach of this Contract subjecting Contractor to penalties up to and including suspension or termination of this Contract. If the breach is by a subcontractor, and the subcontract is suspended or terminated as a result, Contractor shall be required to take such steps as may be necessary to either self-perform the services that would have been provided under the subcontract or retain a replacement subcontractor as soon as possible so as not to delay project completion.

Contractor shall advise each subcontractor of County's rights, and the subcontractor's obligations, under this Article by including a provision in each subcontract substantially in the following form: "Subcontractor hereby warrants that it will at all times during the term of this contract comply with all federal immigration laws applicable to Subcontractor's employees, and with the requirements of A.R.S. § 23-214 (A). Subcontractor further agrees that County may inspect the Subcontractor's books and records to insure that Subcontractor is in compliance with these requirements. Any breach of this paragraph by Subcontractor will be deemed to be a material breach of this contract subjecting Subcontractor to penalties up to and including suspension or termination of this contract."

Any additional costs attributable directly or indirectly to remedial action under this Article shall be the responsibility of Contractor. In the event that remedial action under this Article results in delay to one or more tasks on the critical path of Contractor's approved construction or critical milestones schedule, such period of delay shall be deemed excusable delay for which Contractor shall be entitled to an extension of time, but not costs.

ARTICLE 6 – LAWS AND ORDINANCES: This agreement shall be enforced under the laws of the State of Arizona. Contractor shall maintain in current status all Federal, State and Local licenses and permits required for the operation of the business conducted by the Contractor. The Contractor shall comply with the applicable provisions of the Americans with Disabilities Act (Public Law 101-336, 42 U.S.C. 12101-12213) and applicable federal regulations under the Act.

ARTICLE 7– ANTI-TERRORISM WARRANTY: Pursuant to A.R.S. § 35-393.06(B) and 35-301.06(A) the Contractor certifies that it does not have scrutinized business operations in Iran or Sudan and that they are in compliance with the Export Administration Act and not on the Excluded Parties List.

ARTICLE 8 – CANCELLATION: This agreement is subject to cancellation pursuant to A.R.S. §38-511. If the Agreement is terminated, the county shall be liable only for payment for services rendered and accepted material received by the County before the effective date of termination.

ARTICLE 9 – RELATIONSHIP OF THE PARTIES: Contractor is an independent contractor of the County. Contractor represents that he has or will secure, at his own expense, all personnel required in performing the services under this contract. Such personnel shall not be employees of or have any contractual relationship with the County. All personnel engaged in work under this contract shall be fully qualified and shall be authorized or permitted under State and local law to perform such services.

Contractor warrants that he has obtained or will obtain Worker's Compensation Insurance for his employees working on this contract and that any subcontractors will likewise obtain Worker's Compensation Insurance for of their employees working on this contract. It is further agreed by Contractor that he shall obey all state and federal statutes, rules, and regulations which are applicable to provisions of the services called for herein. Neither Contractor nor any employee of the Contractor shall be deemed an officer, employee, or agent of the County.

ARTICLE 10 – NON-APPROPRIATIONS CLAUSE: Contractor acknowledges that the County is a governmental entity, and the contract validity is based upon the availability of public funding under its authority. In the event that public funds are unavailable and not appropriated for the performance of County's obligations under this contract, then this contract shall automatically expire without penalty to County after written notice to Contractor of the unavailability and non-appropriation of public funds. It is expressly agreed that the County shall only activate this non-appropriation provision as an emergency fiscal measure. The County shall not activate this non-appropriation provision for its convenience, to circumvent the requirements of this contract, or to enable the County to contract with another Contractor for the same supplies or services covered under this Addendum.

ARTICLE 11 – ENTIRE CONTRACT CLAUSE: The Contractor and the County have read this Contract and agree to be bound by all of its terms, and further agree that it constitutes the entire contract between the two parties and may only be modified by a written mutual contract signed by the parties. No oral agreement or oral provision outside this Contract shall have any force or effect.

ARTICLE 12 – NON-WAIVER OF ENFORCEABILITY: Failure of the County to enforce, at any time, any of the provisions of this Contract, or to request at any time performance by Contractor of any of the provisions hereof, shall in no way be construed to be a waiver of such provisions, nor in any way affect the validity of this contract or any part thereof, or the right of the County to enforce each and every provision

ARTICLE 13 – GOVERNING LAW: Both parties agree that this Contract shall be governed by the laws of the state of Arizona. The parties further agree that the jurisdiction for any legal disputes arising out of this Contract shall be the Superior Court of the State of Arizona. The parties agree that even if this Contract does not specifically reference any provision required by state or federal law, those state and federally required provisions are incorporated into this Contract by this reference as though they were specifically listed herein.

ARTICLE 14– TERM: Contract shall be effective date signed by the County Manager and expire 60 days thereafter.

ARTICLE 15 – PAYMENT/BILLING: Contractor shall be paid a flat fee of **$ 33,338.19** for completion of the projects as outlined in the Scope of Services.

All invoices shall be submitted to Gila County Accounts Payable, 1400 E. Ash St, Globe, Arizona and include the following information:

- Purchase Order Number
- Contract Number
- Invoice Number
- Service Location
- Vendor Name and Address
- Description of Service

Any alterations to the scope of work resulting in a change in cost must have prior written approval by the County. Any unauthorized work may result in non-payment to the vendor.

Gila County employs a "Net 15" payment term for services meaning the payment will be issued fifteen (15) days from the date the County receives the invoice from the Contractor. Purchase orders sent to the Contractor reflect these terms and conditions.

The Contractor shall have a current I.R.S. W-9 form on file with the County unless not required by law. The County shall not remit payment if the Contractor does not have a current W-9.

IN WITNESS WHEREOF, Service Agreement No. 011513-2 has been duly executed by the parties hereinabove named, on the date and year first above written.

GILA COUNTY

Don E. McDaniel Jr., County Manager

Date: 1/09/13

POINTE COMPANIES, INC.

Signature

Karl Webster

Print Name

GILA COUNTY COMMUNITY SERVICES DIVISION

Location: 5515 South Apache Ave., Globe, AZ 85501
PHONE: (928) 425-7631 FAX: (928) 425-9468
"Improving the Quality of Life for all Residents"

Gila County Community Action/Housing Services
Weatherization Program

BID RESULTS FORM

Quote Request Date: 1/03/2013 Job Number: 5924

Name: Jeff Williams

Address: 3719 Bancroft Way

The following bids were received at the Gila County Housing Services Department, 5515 S. Apache Ave Suite 200, Globe, AZ 85501; at 10:00 ☒am ☐pm. Bidding should be at least 72 hours from the time of the initial request.

NAME OF BIDDER:	VERBAL CONTACT	BID AMOUNT:
Mountain Retreat		$ 45,600.00
Point		$ 33,338.19
Noble		$ 37,400.62
Rodriguez		$ 36,472.19
		$
		$

13,646.00 CDBG 12
19698.19 COHR

Person opening bids: Gabriel Eylicio

Witness: Michela Montague

Bidder Selected:

Supervisor Sign-off

Date

Housing Rehabilitation | Community Action | Section 8 Housing | GEST

Workforce Investment Act | REPAC | Weatherization Program

Reasonable accommodations for persons with disabilities may be requested.
Countywide TTY (928) 425-0839

Gila County Housing Services
5515 S. Apache Ave.
P.O. Box 1254
Globe Az. 85502
(928)425 - 7631

RESPEC
Work Summary

Case Number: 5924

BID TOTAL $: 33,338.19

Property Information:

3719 Bancroft Way
Claypool AZ 85501

Jurisdiction: Claypool
Target Area: General Area
Census: 1
Owner:

Jeff Williams
3719 Bancroft Way
Claypool AZ 85501

Phone: (928)793-3811
Mobile:

BID OPENING DATE

CONTRACTOR INFORMATION

Name: Restoration Pointe L.L.C.
Address: 1792 Commerce Drive
Lakeside, AZ 85929

Voice: 928-369-6116
Fax: 877-489-1546
email: brad@pointe-az.com

Contractor Signature: [signature] Date: 1/2/2013

Mobile Home
Unit Info:

Single Family
Williams Jeff
3719 Bancroft Way
Phone: (928)793-3811 Work Phone:

Owner

RESPEC Estimate Report case#: 5924

Interior | Mobile Home | Single Family |House |General Requirments

1	0000000000	0 NA	0	$ 946.00

Permits and Fees

Contractor to provide all permits and fees required to complete the job to local codes and regulations, including IRC, OSHA, and Gila County Codes. Contractor must also provide a job log, and a health and safty checklist provided by Gila County and completed by contractor.

2	0000000001	0 NA	0	$ 0.00

Alternates and Suggestions

Contractor is encouraged to suggest alternative and better methods to the rehabilitation specialist, and to notify him of items left out or discrepancies. Please use this section to show item and price. Do not add to total.

3	0000000002	0 ea	0	$ 0.00

Performance

All work is to comply with current IRC, or Gila County Building code, Performance Manual guidelines and or local building, electrical and plumbing codes with inspections and permits when applicable.

All work to be done in a quality and Professional manner.

All work to include any items or components required for a complete and functional system. Incidental items not mentioned in the specifications or listed in RESPEC that can reasonably and legitimately be inferred to belong to the work described or be necessary, in good practice to provide a complete system shall be furnished and installed as though called out in every detail associated with each job item even if not listed directly.

4	0000000003	0 1	0	$ 0.00

ALL LEAD WORK

INTERIM CONTROLS, AND ABATEMENT CONTROLS, REMOVAL OR REPLACEMENT OF LEAD BASED PAINTED SURFACES OR COMPONENTS MUST BE DONE BY TRAINED, LICENSED CONTRACTORS AND WORKERS, AND MUST BE DONE IN ACCORDANCE WITH THE DEPARTMENT OF HOUSING AND URBAN DEVELOPMENT GUIDELINES, 24 CFR Part 35,et.a.

Interior | Mobile Home | Single Family |House |Roof Repairs

5	0070010001	0 SF	0	$ 12,138.90

Tear Off Existing Roof and Install New

Remove existing roofing and pile neatly and haul away immediately!! Replace any damaged or rotten roof sheathing.
Replace all flashing, install 30# felt paper, matching metal drip edge, new valley metal, vent boots, and 2" high density foam insulation, and 24 gauge metal roofing with a "MINIMUM SRI of 70" (color MUST be Natural white, Shasta White, or light Almond) material provide a overhang to detour water run off away from side wall.

NOTE: IF EXISTING SHEATHING OR STRUCTURAL MEMBERS ARE DETERIORATED, ROTTED, DAMAGED, NON- EXISTING, THE CONTRACTOR MUST CONTACT THIS AGENCY TO EXECUTE A

RESPEC Estimate Report .e#: 5924

CHANGE ORDER PRIOR TO ANY SHEATHING WORK BEING DONE THAT IS NOT DIRECTLY SPECIFIED IN THE WORK WRITE-UP.

-Roof Options: Price per sheathing replacement allowance, materials and labor: $1.50 per sq. ft.

Interior | Mobile Home | Single Family |House |Stove

6	0330010010	0	0	$ 861.60

Stove

Replace the old stove with a new, electric ignition model. Gas valve and flex line must be replaced also must meet code which it violates currently by not exiting cabinet with hard pipe. Leak test and operate

Interior | Mobile Home | Single Family |House |Electrical

7	0110010007	0 Each	0	$ 1634.22

Relocate & Upgrade Electric Service

Disconnect existing electric service. Install new (100, 150, 200) amp service to specified location. Use Square D, Cutler-Hammer, Westinghouse or equal. Relocation & upgrade to meet NEC.

NOTE: May need to install new poll and ground rod to make code

8	0110030008	0 PER F	0	$ 3370.63

Rewire House

Remove and dispose of all old and or illegal and defective wiring and boxes. Replace with new wiring, outlets and boxes to code. All unused switches, receptacles, fixtures, and conductors must be removed.and switched lighting May be flourescent or CFL bulbs installed and provided for each and every room and exterior lighting and outlets for each door as well sub panels.

Note: Code requires hardwired smoke alarms to be installed. This project will require a building inspection clearence report.

9	0110040010	0 NO	0	$ 274.76

Install Range Hood

Install Range hood securely mounted exhaust fan, to be 2 speed fan and overhead light nutone or approved equal. If possible have exhaust exit side wall in same location original removed hood was located. Color to be chosen by homeowner.

Interior | Mobile Home | Single Family |House |Plumbing Repairs

10	0130010007	0 lf	0	$ 687.76

Insulate water lines 1/2-3/4-1"

Install preformed foam insulation on all lines as needed. Pieces must butt neatly and tight. Loose seams and butt ends to be sealed using an adhesive backed foam tape.

Note: Repair any and all leaks prior to insulating.

11	0130040020	0 NO	0	$ 1458.70

Replace Tub/Shower

Remove old unit and replace water and drain lines with new according to local code as per Performance Manual guidelines. use a low flow shower valve and head washer less assemblies such as brand reference's of moen or delta single lever design, and new tub and surround may be a three piece unit.

Interior | Mobile Home | Single Family |House |Doors

12	0010090006	0	0	$ 1625.45

Install 3 Prehung Exterior Door

Provide and install factory hung 1-3/4" raised panel/metal clad/foam core door,(Pease, Thermatru, Stanley

RESPEC Estimate Report s#: 5924

-or approved equal), complete with keyed lockset and trim both sides, dead bolt, vinyl bubble weatherstripping, and aluminum threshold. Make all necessary wall repairs and finish system to owner's preference.

Interior | Mobile Home | Single Family |House |General Repairs				
13	0060020006	0 NO	0	$ 410.91

Caulk House Complete

Clean all surfaces and caulk to provide leak-free seal according to Performance Manual guidelines.

Interior | Mobile Home | Single Family |House |Floor				
14	0030010006	0 SF	0	$ 2772.68

Replace Sheetgoods

Remove and dispose of existing flooring; scrape and clean surface smooth; fill all cracks and holes with floor leveler.
Install new VCT tile as per manufacturer's recommendations. Include vinyl cove base moulding. Include material allowance of $1.05 square ft. ($9.45 sq. yd)
Include all cove base trim to provide neat finished appearance.
Customer to have choice of color and style

15	0120020004	0 NO	0	$ 38.00

Install Registers

Install new registers of appropriate size to match adjacent surfaces. in living room area

Interior | Mobile Home | Single Family |House |Interior Walls				
16	0010020008	0 SF	0	$ 5223.96

Replace Paneling

Remove old paneling materials (interior of mobile). Remove then install insulation.
Then Caulk and install new paneling trim to be included.

Interior | Mobile Home | Single Family |House |Ceiling				
17	0010200202	0	0	$ 477.34

Repair the ceiling.

Repair the ceiling(s) as described.

Interior | Mobile Home | Single Family |House |Safety				
18	0010040002	0 NO	0	$ 413.54

Replace Stairs

Remove existing stair system and replace with new system as per Performance Manual guidelines. Price shall include all repairs associated with removal and installation of stair and handrail system.

Interior | Mobile Home | Single Family |House |Windows				
19	0010100022	0 NO.	0	$ 803.54

Replace 2 Window With Solid Vinyl

Remove existing prime window and replace with new solid vinyl replacement window made to fit opening. Make all necessary wall repairs and trim with applicable molding. Include all hardware and screen, finish molding to owner's preference. Must be double pane. Owner to have input on color.
Windows must have Energy Star rating. Central Zone Energy star ratings are u-factor 0.40 solar heat gain 0.55 as of August 2002. one in living room and one in kitchen where there have been patched with plywood.

RESPEC Estimate Report Q e#: 5924

Total for: House $ 16,137.00

Total for: Interior $ 17201.19

Job Total Cost: $ 33,338.19

Tommie C. Martin, District I
P.O. Box 2297 Payson, AZ. 85547
(928) 474-2029

Michael A. Pastor, District II
1400 E. Ash St. Globe, AZ. 85501
(928) 425-3231 Ext. 8753

John Marcanti, District III
1400 E. Ash St. Globe, AZ. 85501
(928) 425-3231 Ext. 8511

GILA COUNTY
www.gilacountyaz.gov

Don E. McDaniel Jr., County Manager
Phone (928) 425-3231 Ext.8761

Joseph T. Heatherly, Finance Director
Phone (928) 425-3231 Ext. 8743

1400 E. Ash Street
Globe, AZ 85501

SERVICE AGREEMENT NO. 011513-3

MAJOR REHAB WEATHERIZATION PROJECT NO. HH#144-11-04

THIS AGREEMENT, made and entered into this 23RD day of JANUARY, **2013**, by and between Gila County, a political subdivision of the State of Arizona hereinafter designated the County, and Pointe Companies, Inc., of the City of Lakeside, State of Arizona, hereinafter designated the Contractor.

WITNESSETH: The Contractor, for and in consideration of the sum to be paid him by the County, in the manner and at the time hereinafter provided, and of the other covenants and agreement's herein contained, hereby agrees, for himself, his heirs, administrators, successors, and assigns as follows:

ARTICLE 1 – SCOPE OF SERVICES: The Contractor shall provide the services and products listed in the Scope of Work below for Major Rehab Weatherization Project HH#144-11-04, and shall do so in a good, workmanlike, and substantial manner and to the satisfaction of the County under the direction of the Housing Services Manager or designee.

All work performed by the Contractor shall be completed to local codes and regulation per Gila County and the State of Arizona and consistent with all Weatherization guidelines.

Scope of Work: Refer to attached Attachment "A" by mention made a binding part of this agreement as set forth herein.

Contractor Fee's: Refer to Attachment "A" by mention made a binding part of this agreement as set forth herein. Contractor will be paid fifty (50) percent upon presentation of an invoice at the beginning of the project, and the remaining fifty (50) percent upon presentation of an invoice upon completion of the project.

ARTICLE 2 – TERMINATION: The County reserves the right to terminate the Contract, in whole or in part at any time, when in the best interest of the County, without penalty or recourse. Upon receipt of the written notice, the Contractor shall stop all work as directed in the notice. If the contract is terminated, the County shall be liable only for the services rendered under this contract and accepted material received by the County before the effective date of termination.

ARTICLE 3 - INDEMNIFICATION: Contractor shall indemnify, defend, save and hold harmless the County of Gila and its officers, officials, agents, and employees (hereinafter referred to as "Indemnitee") from and against any and all claims, actions, liabilities, damages, losses, or expenses (including court costs, attorneys' fees, and costs of claim processing, investigation and litigation) (hereinafter referred to as "Claims") for bodily injury or personal injury (including death), or loss or damage to tangible or intangible property caused, or alleged to be caused, in whole or in part, by the negligent or willful acts or omissions of Contractor or any of its owners, officers, directors, agents, employees or subcontractors. This indemnity includes any claim or amount arising out of or recovered under the Workers' Compensation Law or arising out of the failure of such contractor to conform to any federal, state or local law, statute, ordinance, rule, regulation or court decree. It is the specific intention of the parties that the Indemnitee shall, in all instances, except for Claims arising solely from the negligent or willful acts or omissions of the Indemnitee, be indemnified by Contractor from and against any and all claims. It is agreed that Contractor will be responsible for primary loss investigation, defense and judgment costs where this indemnification is applicable. In consideration of the award of this contract, the Contractor agrees to waive all rights of subrogation against the County, its officers, officials, agents and employees for losses arising from the work performed by the Contractor for the County.

ARTICLE 4 – INSURANCE REQUIREMENTS: Contractor and subcontractors shall procure and maintain until all of their obligations have been discharged, including any warranty periods under this Contract are satisfied, insurance against claims for injury to persons or damage to property which may arise from or in connection with the performance of the work hereunder by the Contractor, his agents, representatives, employees or subcontractors.

The insurance requirements herein are minimum requirements for this Contract and in no way limit the indemnity covenants contained in this Contract. The County in no way warrants that the minimum limits contained herein are sufficient to protect the Contractor from liabilities that might arise out of the performance of the work under this contract by the Contractor, his agents, representatives, employees or subcontractors and Contractor is free to purchase additional insurance as may be determined necessary.

A. **MINIMUM SCOPE AND LIMITS OF INSURANCE:** Contractor shall provide coverage with limits of liability not less than those stated below.

1. **Commercial General Liability – Occurrence Form**
   Policy shall include bodily injury, property damage and broad form contractual liability coverage.
   - General Aggregate $2,000,000
   - Products – Completed Operations Aggregate $1,000,000
   - Personal and Advertising Injury $1,000,000
   - Each Occurrence $1,000,000

   a. The policy shall be endorsed to include the following additional insured language: **"The County of Gila shall be named as an additional insured with respect to liability arising out of the activities performed by, or on behalf of the Contractor".**

2. **Worker's Compensation and Employers' Liability**

Workers' Compensation	Statutory
Employers' Liability	
Each Accident	$100,000
Disease – Each Employee	$100,000
Disease – Policy Limit	$500,000

   a. Policy shall contain a **waiver of subrogation** against the County of Gila.

3. **Professional Liability (Errors and Omissions Liability)**

Each Claim	$1,000,000
Annual Aggregate	$2,000,000

a. In the event that the professional liability insurance required by this Contract is written on a claims-made basis, Contractor warrants that any retroactive date under the policy shall precede the effective date of this Contract; and that either continuous coverage will be maintained or an extended discovery period will be exercised for a period of two (2) years beginning at the time work under this Contract is completed.

B. **ADDITIONAL INSURANCE REQUIREMENTS:** The policies shall include, or be endorsed to include, the following provisions:

1. On insurance policies where the County of Gila is named as an additional insured, the County of Gila shall be an additional insured to the full limits of liability purchased by the Contractor even if those limits of liability are in excess of those required by this Contract.
2. The Contractor's insurance coverage shall be primary insurance and non-contributory with respect to all other available sources.
3. Coverage provided by the Contractor shall not be limited to the liability assumed under the indemnification provisions of this Contract.

C. **NOTICE OF CANCELLATION:** Each insurance policy required by the insurance provisions of this Contract shall provide the required coverage and shall not be suspended, voided, canceled, reduced in coverage or endorsed to lower limits except after thirty (30) days prior written notice has been given to the County. Such notice shall be sent directly to **Gila County Purchasing Department, 1400 E. Ash St., Globe, AZ, 85501** or and shall be sent by certified mail, return receipt requested.

D. **ACCEPTABILITY OF INSURERS:** Insurance is to be placed with insurers duly licensed or approved unlicensed companies in the state of Arizona and with an "A.M. Best" rating of not less than B+ VI. The County in no way warrants that the above-required minimum insurer rating is sufficient to protect the Contractor from potential insurer insolvency.

E. **VERIFICATION OF COVERAGE:** Contractor shall furnish the County with certificates of insurance (ACORD form or equivalent approved by the County) as required by this Contract. The certificates for each insurance policy are to be signed by a person authorized by that insurer to bind coverage on its behalf.

All certificates and endorsements are to be received and approved by the County before work commences. Each insurance policy required by this Contract must be in effect at or prior to commencement of work under this Contract and remain in effect for the duration of the project. Failure to maintain the insurance policies as required by this Contract or to provide evidence of renewal is a material breach of contract.

All certificates required by this Contract shall be sent directly to **Gila County Purchasing Department, 1400 E. Ash St., Globe, AZ, 85501** or email to dsgroi@co.gila.az.us. The County project/contract number and project description shall be noted on the certificate of insurance. The County reserves the right to require complete, certified copies of all insurance policies required by this Contract at any time.

F. **SUBCONTRACTORS:** Contractors' certificate(s) shall include all subcontractors as additional insured's under its policies or Contractor shall furnish to the County separate certificates and endorsements for each subcontractor. All coverage's for subcontractors shall be subject to the minimum requirements identified above.

G. **APPROVAL:** Any modification or variation from the insurance requirements in this Contract shall be made by the County Attorney, whose decision shall be final. Such action will not require a formal Contract amendment, but may be made by administrative action.

ARTICLE 5 – LEGAL ARIZONA WORKERS ACT COMPLIANCE: Contractor hereby warrants that it will at all times during the term of this Contract comply with all federal immigration laws applicable to Contractor's employment of its employees, and with the requirements of A.R.S. § 23-214 (A) (together the "State and Federal Immigration Laws"). Contractor shall further ensure that each subcontractor who performs any work for Contractor under this contract likewise complies with the State and Federal Immigration Laws. County shall have the right at any time to inspect the books and records of Contractor and any subcontractor in order to verify such party's compliance with the State and Federal Immigration Laws.

Any breach of Contractor's or any subcontractor's warranty of compliance with the State and Federal Immigration Laws, or of any other provision of this section, shall be deemed to be a material breach of this Contract subjecting Contractor to penalties up to and including suspension or termination of this Contract. If the breach is by a subcontractor, and the subcontract is suspended or terminated as a result, Contractor shall be required to take such steps as may be necessary to either self-perform the services that would have been provided under the subcontract or retain a replacement subcontractor as soon as possible so as not to delay project completion.

Contractor shall advise each subcontractor of County's rights, and the subcontractor's obligations, under this Article by including a provision in each subcontract substantially in the following form: "Subcontractor hereby warrants that it will at all times during the term of this contract comply with all federal immigration laws applicable to Subcontractor's employees, and with the requirements of A.R.S. § 23-214 (A). Subcontractor further agrees that County may inspect the Subcontractor's books and records to insure that Subcontractor is in compliance with these requirements. Any breach of this paragraph by Subcontractor will be deemed to be a material breach of this contract subjecting Subcontractor to penalties up to and including suspension or termination of this contract."

Any additional costs attributable directly or indirectly to remedial action under this Article shall be the responsibility of Contractor. In the event that remedial action under this Article results in delay to one or more tasks on the critical path of Contractor's approved construction or critical milestones schedule, such period of delay shall be deemed excusable delay for which Contractor shall be entitled to an extension of time, but not costs.

ARTICLE 6 – LAWS AND ORDINANCES: This agreement shall be enforced under the laws of the State of Arizona. Contractor shall maintain in current status all Federal, State and Local licenses and permits required for the operation of the business conducted by the Contractor. The Contractor shall comply with the applicable provisions of the Americans with Disabilities Act (Public Law 101-336, 42 U.S.C. 12101-12213) and applicable federal regulations under the Act.

ARTICLE 7– ANTI-TERRORISM WARRANTY: Pursuant to A.R.S. § 35-393.06(B) and 35-301.06(A) the Contractor certifies that it does not have scrutinized business operations in Iran or Sudan and that they are in compliance with the Export Administration Act and not on the Excluded Parties List.

ARTICLE 8 – CANCELLATION: This agreement is subject to cancellation pursuant to A.R.S. §38-511. If the Agreement is terminated, the county shall be liable only for payment for services rendered and accepted material received by the County before the effective date of termination.

ARTICLE 9 – RELATIONSHIP OF THE PARTIES: Contractor is an independent contractor of the County. Contractor represents that he has or will secure, at his own expense, all personnel required in performing the services under this contract. Such personnel shall not be employees of or have any contractual relationship with the County. All personnel engaged in work under this contract shall be fully qualified and shall be authorized or permitted under State and local law to perform such services.

Contractor warrants that he has obtained or will obtain Worker's Compensation Insurance for his employees working on this contract and that any subcontractors will likewise obtain Worker's Compensation Insurance for of their employees working on this contract. It is further agreed by Contractor that he shall obey all state and federal statutes, rules, and regulations which are applicable to provisions of the services called for herein. Neither Contractor nor any employee of the Contractor shall be deemed an officer, employee, or agent of the County.

ARTICLE 10 – NON-APPROPRIATIONS CLAUSE: Contractor acknowledges that the County is a governmental entity, and the contract validity is based upon the availability of public funding under its authority. In the event that public funds are unavailable and not appropriated for the performance of County's obligations under this contract, then this contract shall automatically expire without penalty to County after written notice to Contractor of the unavailability and non-appropriation of public funds. It is expressly agreed that the County shall only activate this non-appropriation provision as an emergency fiscal measure. The County shall not activate this non-appropriation provision for its convenience, to circumvent the requirements of this contract, or to enable the County to contract with another Contractor for the same supplies or services covered under this Addendum.

ARTICLE 11 – ENTIRE CONTRACT CLAUSE: The Contractor and the County have read this Contract and agree to be bound by all of its terms, and further agree that it constitutes the entire contract between the two parties and may only be modified by a written mutual contract signed by the parties. No oral agreement or oral provision outside this Contract shall have any force or effect.

ARTICLE 12 – NON-WAIVER OF ENFORCEABILITY: Failure of the County to enforce, at any time, any of the provisions of this Contract, or to request at any time performance by Contractor of any of the provisions hereof, shall in no way be construed to be a waiver of such provisions, nor in any way affect the validity of this contract or any part thereof, or the right of the County to enforce each and every provision

ARTICLE 13 – GOVERNING LAW: Both parties agree that this Contract shall be governed by the laws of the state of Arizona. The parties further agree that the jurisdiction for any legal disputes arising out of this Contract shall be the Superior Court of the State of Arizona. The parties agree that even if this Contract does not specifically reference any provision required by state or federal law, those state and federally required provisions are incorporated into this Contract by this reference as though they were specifically listed herein.

ARTICLE 14– TERM: Contract shall be effective date signed by the County Manager and expire 60 days thereafter.

ARTICLE 15 – PAYMENT/BILLING: Contractor shall be paid a flat fee of **$ 30,823.65** for completion of the projects as outlined in the Scope of Services.

All invoices shall be submitted to Gila County Accounts Payable, 1400 E. Ash St, Globe, Arizona and include the following information:

- Purchase Order Number
- Contract Number
- Invoice Number
- Service Location
- Vendor Name and Address
- Description of Service

Any alterations to the scope of work resulting in a change in cost must have prior written approval by the County. Any unauthorized work may result in non-payment to the vendor.

Gila County employs a "Net 15" payment term for services meaning the payment will be issued fifteen (15) days from the date the County receives the invoice from the Contractor. Purchase orders sent to the Contractor reflect these terms and conditions.

The Contractor shall have a current I.R.S. W-9 form on file with the County unless not required by law. The County shall not remit payment if the Contractor does not have a current W-9.

IN WITNESS WHEREOF, Service Agreement No. 011513-3 has been duly executed by the parties hereinabove named, on the date and year first above written.

GILA COUNTY

Don E. McDaniel Jr., County Manager

Date: 1/23/13

POINTE COMPANIES, INC.

Signature

Karl Webster

Print Name

GILA COUNTY COMMUNITY SERVICES DIVISION

Location: 5515 South Apache Ave., Globe, AZ 85501
PHONE: (928) 425-7631 FAX: (928) 425-9468
"Improving the Quality of Life for all Residents"

Gila County Community Action/Housing Services
Weatherization Program

BID RESULTS FORM

Quote Request Date: 1/03/2013 Job Number: CDBG 144-11-04

Name: Sandra Morris

Address: 5924 Kinnermur Ave.

The following bids were received at the Gila County Housing Services Department, 5515 S. Apache Ave Suite 200, Globe, AZ 85501; at 10:00 ☒am ☐pm. Bidding should be at least 72 hours from the time of the initial request.

NAME OF BIDDER:	VERBAL CONTACT	BID AMOUNT:
Mountain		$ 44,380.00
Point		$ 30,823.65
Noble		$ 38,491.15
Rodriguez		$ 33,136.26
		$
		$

Person opening bids: Gabriel Eylicio

Witness: Nicholas Montague

Bidder Selected: Pacific Companies

Supervisor Sign-off

1-14-2013
Date

Housing Rehabilitation | Community Action | Section 8 Housing | GEST

Workforce Investment Act | REPAC | Weatherization Program

Reasonable accommodations for persons with disabilities may be requested.
Countywide TTY (928) 425-0839

Gila County Housing Services
5515 S. Apache Ave.
P.O. Box 1254
Globe Az. 85502
(928)425 - 7631

RESPEC
Work Summary

Case Number: CDBG 144-11-04

BID TOTAL $: 30,823.65

Property Information:

5924 Kinnemur Ave
Miami AZ 85539-

Jurisdiction: Town of Miami
Target Area: Lower Miami
Census: 2
Owner:

Sandra Morris
5924 Kinnemur Ave
Miami AZ 85539-

Phone: (928)793-4582
Mobile:

BID OPENING DATE

CONTRACTOR INFORMATION

Name: Respection Pointe LLC.
Address: 1792 Commerce Drive
Lakeside, Az. 85929

Voice: 928-369-6116
Fax: 877-489-1546
email: bradepointe-az.com

Contractor Signature: [signature] Date: 1/2/2013

Main Structure

Unit Info:

Single Family

Owner

Sandra Morris
5924
Phone: Kinnemur Work Phone: (928)793-4582

Interior | Main Structure | Single Family |House |General Requirments

1	0000000000	0 NA	0	$ 949.24

Permits and Fees

Contractor to provide all permits and fees required to complete the job to local codes and regulations, including IRC, OSHA, and Gila County Codes.

2	0000000001	0 NA	0	$ 0.00

Alternates and Suggestions

Contractor is encouraged to suggest alternative and better methods to the rehabilitation specialist, and to notify him of items left out or discrepancies. Please use this section to show item and price. Do not add to total.

3	0000000002	0 ea	0	$ 0.00

Performance

All work is to comply with current IRC, or Gila County Building code, Performance Manual guidelines and or local building, electrical and plumbing codes with inspections and permits when applicable.
All work to be done in a quality and Professional contractor manner.
All work to include any items or components required for a complete and functional system. Incidental items not mentioned in the specifications or listed in RESPEC that can reasonably and legitimately be inferred to belong to the work described or be necessary, in good practice to provide a complete system shall be furnished and installed as though called out in every

4	0000000003	0 1	0	$ 0.00

ALL LEAD WORK INCLUDED IN # 16

INTERIM CONTROLS, AND ABATEMENT CONTROLS, REMOVAL OR REPLACEMENT OF LEAD BASED PAINTED SURFACES OR COMPONENTS MUST BE DONE BY TRAINED, LICENSED CONTRACTORS AND WORKERS, AND MUST BE DONE IN ACCORDANCE WITH THE DEPARTMENT OF HOUSING AND URBAN DEVELOPMENT GUIDELINES, 24 CFR Part 35,et.a.

Interior | Main Structure | Single Family |House |Roof Repairs

5	0070010001	0 SF	0	$ 7262.38

Tear Off Existing Roof and Install New

Remove existing roofing and pile neatly and haul away immediately. Replace any damaged or rotten roof sheathing.
Replace all flashing at chimney and install 30# felt paper, aluminum drip edge, new valley metal, vent boots, include chimney, and new 235 lb. composition 25-year fiberglas shingles.

NOTE: IF EXISTING SHEATHING OR STRUCTURAL MEMBERS ARE DETERIORATED, ROTTED, DAMAGED, NON- EXISTING, THE CONTRACTOR MUST CONTACT THIS AGENCY TO EXECUTE A CHANGE ORDER PRIOR TO ANY SHEATHING WORK BEING DONE THAT IS NOT DIRECTLY SPECIFIED IN THE WORK WRITE-UP.

-Roof Options: Shasta white shingles

6	0010060005	0 LF	0	$ 2297.94

Install Fascia and box eves

Install and Replace #2 grade 1" x pine fascia, Box all eves with pre primed siding; prime all sides before

installation. Use galvanized finished nails. All butt seams must be backed; caulk all seams. Include

7	0070030002	0 LF	0	$ 389.90

Install New Gutters and Downspouts

Install new white aluminum seamless spouting and calculated number of outlets and downspouts to accommodate maximum water volumes.
Also install concrete splash blocks or tie into existing storm lines at each downspout exit to minimize erosion.

Interior | Main Structure | Single Family |House |Heating

8	0120040002	0 ea	0	$ 5705.58

Install Heat Pump 2 Ton System

Install new Electric Heat pump system, Must also perform a Manuel J. to verify sizing per manufactures instructions, include 14 Seer A/C 8. HSPF heat pump, Air handler, Heat strips, Cased coil, new R-8 ductwork, thermostat, registers, dedicated electrical breakers, installed to code. Outdoor unit elevation: PMI by area snowfall, or local code.

1) size the new furnace/heat pump to the home per ACCA Manual J, Residential Load Calculations, submit your load calculation form with your bid showing the sizing of the furnace for the design heat load. Do not over size the unit. **NOTE:** Unit size may round up to nearest 1/2 ton, but must not be undersized.
2) electrical supply must be a dedicated circut.
3) unit must have a minimum 30 inch front clearance, when installed.
4) check the temp. rise and match to the unit (PMI)
5) Must meet or Exceed WAP STANDARDS also must record blower door results with rehab specialist present and submitted prior to finial draw.

All furnace work must meet or exceed NFPA #54, as well as any other local codes

Install the ductwork for best possible efficiency, Use a reduced plenum system if possible.
size all ducts for best performance (PMI)
1) all joints in return air and supply ducts must be sealed
2) install a filter chamber with a cover
3) filter to be of common readily available size and provide 1 case with install

Note: All attic installations of combined heating/cooling or condensing furnace equipment, requires the addition of a properly drained overflow pan.

Interior | Main Structure | Single Family |House |Insulation

9	0060010006	0 S.F.	0	$ 2075.25

Blown Fiberglass, Open Attic - (R-38)

Coverage should be as level as possible, and to the depth of material that corresponds with each R- value. According to each Individual manufacturer's recommendations for initially installed thickness and settled density: usually found in the coverage table on the material packaging with a label stapled to entrance framing and at least 3 depth gages installed properly in various sections of attic. Material shall meet and conform to ASTM C764-84.

NOTE: In bedroom 2 and in Storage install a R-9 Batt.

10	0060010009	0 S.F.	0	$ 89.80

Fiberglass Insulation, Wall - (R11) Batt

Install the batts insulation in bedroom 2 open wall cavities after gaps and or voids are sealed with foam or chalking. Insulation shall be installed with the vapor barrier facing the conditioned area; insulation shall

RESPEC Estimate Report Case#: CDBG 144-11-04

completely fill area between joints or studs and shall be secured with the appropriate mechanical fasteners. Material shall meet ASTM C665-86 or subsequently amended.

Interior | Main Structure | Single Family |House |Electrical

11	0110010006	0 Each	0	$ 2149.71

Upgrade Electric to (200) Amp Service

Disconnect existing service. Install new (200) amp 3 wire service and panel, complete with a main breaker, and breaker style circuits, with all circuits labeled and balanced. Also electrical must have GFCI outlets and or circuits within 6 ft of water or in weather also provide a service outlet on panel and hard wired smoke alarms. Square D, Cutler-Hammer, Westinghouse or approved equal. Upgrade to meet NEC.

12	0110030008	0 PER F	0	$ 3934.60

Rewire House

Remove and dispose of all illegal and defective wiring and boxes. Replace with new wiring, outlets and boxes to code.All unused switches,receptacles,fixtures, and conductors must be removed.

Interior | Main Structure | Single Family |House |Doors

13	0010090006	0	0	$ 580.24

Install Prehung Exterior Door

Provide and install factory hung 1-3/4" raised panel/metal clad/foam core door,(Pease, Thermatru, Stanley or approved equal), complete with keyed lockset and trim both sides, dead bolt, vinyl bubble weatherstripping, and aluminum threshold. Make all necessary wall repairs to stucco and finish system to industry standards.

Interior | Main Structure | Single Family |House |Windows

14	0010100028	0	0	$ 2655.36

Replace aluminum windows

Replace all 10 old windows with aluminum framed, double pane single hung silders. All trim work inside

15	0010100027	0 ea	0	$ 829.71

Remove and Close in Opening

Remove opening for windows C-1 thru C-2 ; frame in opening; insulate to full "R" value, Prime interior, on exterior surfaces stucco to match existing.

Interior | Main Structure | Single Family |House |Painting

16	0100010007	0 LF	0	$ 63.97

Paint Trim

Lead paint encapsulate kitchen to storage door casing and Jam also kitchen shelve C-wall, also include wall of Dormer. Prepare surface and prime and paint as system per manufactures requirements.

Interior | Main Structure | Single Family |House |Floor

17	0030010007	0 SF	0	$ 495.59

Install Carpet

Prepare floor to smooth and uniform surface; Install new carpet with backing and cushioning as per manufacturer's recommendation. Include needed chrome threshold strips. (Material allowance of $12.00 per square yard.) in bedroom 1

Interior | Main Structure | Single Family |House |Drywall

18	0010020008	0 SF	0	$ 744.91

Install Sheet Rock

Install 1/2 sheet rock, Tape, and one finish coat walls and cieling of bedroom 2.

RESPEC Estimate Report Case#: CDBG 144-11-04

Total for: House $ 22590.33

Total for: Interior $ 8233.32

Job Total Cost: $ 30,823.65

XRF POSITIVE SUMMARY REPORT

Address: 5924 Kinnemur Avenue, Miami, Arizona 85539

Sample	Area	Room Equivalent	Site Tested	Component	Substrate	Condition	Color	Lead	Results	Quantities (Including Sides) Per Area	Comments
23	Exterior	01 Exterior	D	Window Sill	Wood	Poor	Brown	7.02	Positive	10 Each (C, D)*	
24	Exterior	01 Exterior	D	Window Sash	Wood	Poor	Brown	9.65	Positive	10 Each (C, D)*	
25	Exterior	01 Exterior	D	Window Casing	Wood	Poor	Brown	7.11	Positive	10 Each (C, D)*	
26	Exterior	01 Exterior	D	Window Jamb	Wood	Poor	Brown	6.04	Positive	10 Each (C, D)	
27	Exterior	01 Exterior	A	Rafter Tails	Wood	Poor	Brown	3.87	Positive	50 Ln. Ft. (A, B)	
28	Exterior	01 Exterior	A	Eaves	Wood	Poor	Brown	4.39	Positive	100 Sq. Ft. (A, B)	
30	Exterior	01 Exterior	A	Dormer Wall	Wood	Poor	White	1.40	Positive	12 Sq. Ft.	
31	Exterior	01 Exterior	A	Dormer Fascia	Wood	Poor	White	2.36	Positive	5 Ln. Ft.	
32	Exterior	01 Exterior	A	Dormer Rafter	Wood	Poor	White	1.52	Positive	4 Ln. Ft.	
33	Exterior	01 Exterior	A	Dormer Eaves	Wood	Poor	White	2.08	Positive	10 Sq. Ft.	
49	Exterior	01 Exterior	B	Eaves	Wood	Poor	Brown	1.36	Positive	16 Sq. Ft. (B, D)	
78	Interior	03 Kitchen	C	Door Jamb	Wood	Fair	White	3.16	Positive	1 Each	
87	Interior	03 Kitchen	C	Shelves Casing	Wood	Fair	White	1.47	Positive	1 Each	
96	Interior	04 Storage	A	Door Casing	Wood	Poor	White	2.67	Positive	1 Each	
97	Interior	04 Storage	A	Door Jamb	Wood	Poor	White	2.01	Positive	1 Each	
100	Interior	04 Storage	A	Window Casing	Wood	Poor	White	1.70	Positive	1 Each	
101	Interior	04 Storage	C	Window Sill	Wood	Poor	White	1.32	Positive	3 Each	
102	Interior	04 Storage	C	Window Sash	Wood	Poor	White	1.48	Positive	3 Each	
103	Interior	04 Storage	C	Window Casing	Wood	Poor	White	1.67	Positive	3 Each	
104	Interior	04 Storage	C	Window Jamb	Wood	Poor	White	1.59	Positive	3 Each	
165	Interior	08 Bedroom	A	Floor	Ceramic Tile	Intact	White	1.40	Positive	100 Sq. Ft.	

*10 Each (C, D) C-1, C-2, C-3, C-4, C-5, C-6, C-7, C-8, D-1 and D-2

ATTACHMENT "A" Page 7 of 8

5924 KINNEMUR AVENUE
MIAMI, ARIZONA 85539

C

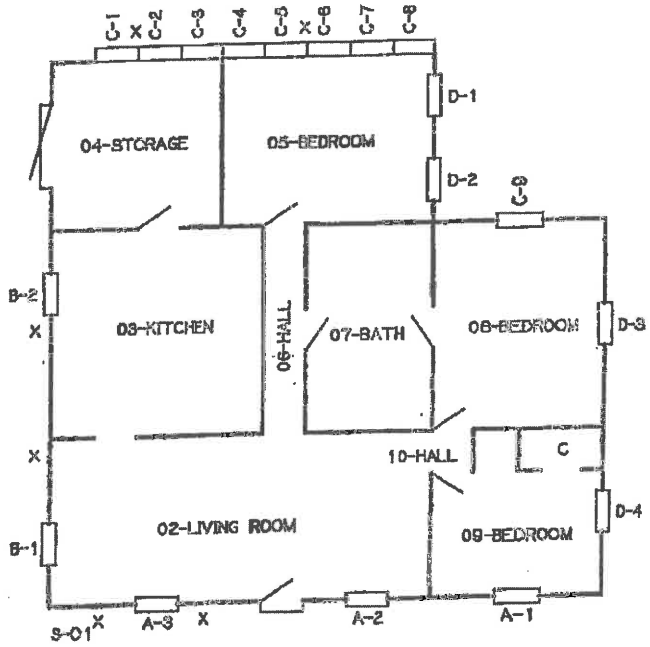

B

D

01-EXTERIOR

A

X = where soil was sampled.

Tommie C. Martin, District I
P.O. Box 2297 Payson, AZ. 85547
(928) 474-2029

Michael A. Pastor, District II
1400 E. Ash St. Globe, AZ. 85501
(928) 425-3231 Ext. 8753

John Marcanti, District III
1400 E. Ash St. Globe, AZ. 85501
(928) 425-3231 Ext. 8511

GILA COUNTY
www.gilacountyaz.gov

Don E. McDaniel Jr., County Manager
Phone (928) 425-3231 Ext.8761

Joseph T. Heatherly, Finance Director
Phone (928) 425-3231 Ext. 8743

1400 E. Ash Street
Globe, AZ 85501

SERVICE AGREEMENT NO. 011513-4

MAJOR REHAB WEATHERIZATION PROJECT NO. HH#4398

THIS AGREEMENT, made and entered into this 23RD day of JANUARY, **2013**, by and between Gila County, a political subdivision of the State of Arizona hereinafter designated the County, and Pointe Companies, Inc., of the City of Lakeside, State of Arizona, hereinafter designated the Contractor.

WITNESSETH: The Contractor, for and in consideration of the sum to be paid him by the County, in the manner and at the time hereinafter provided, and of the other covenants and agreement's herein contained, hereby agrees, for himself, his heirs, administrators, successors, and assigns as follows:

ARTICLE 1 – SCOPE OF SERVICES: The Contractor shall provide the services and products listed in the Scope of Work below for Major Rehab Weatherization Project HH#4398, and shall do so in a good, workmanlike, and substantial manner and to the satisfaction of the County under the direction of the Housing Services Manager or designee.

All work performed by the Contractor shall be completed to local codes and regulation per Gila County and the State of Arizona and consistent with all Weatherization guidelines.

Scope of Work: Refer to attached Attachment "A" by mention made a binding part of this agreement as set forth herein.

Contractor Fee's: Refer to Attachment "A" by mention made a binding part of this agreement as set forth herein. Contractor will be paid fifty (50) percent upon presentation of an invoice at the beginning of the project, and the remaining fifty (50) percent upon presentation of an invoice upon completion of the project.

ARTICLE 2 – TERMINATION: The County reserves the right to terminate the Contract, in whole or in part at any time, when in the best interest of the County, without penalty or recourse. Upon receipt of the written notice, the Contractor shall stop all work as directed in the notice. If the contract is terminated, the County shall be liable only for the services rendered under this contract and accepted material received by the County before the effective date of termination.

ARTICLE 3 - INDEMNIFICATION: Contractor shall indemnify, defend, save and hold harmless the County of Gila and its officers, officials, agents, and employees (hereinafter referred to as "Indemnitee") from and against any and all claims, actions, liabilities, damages, losses, or expenses (including court costs, attorneys' fees, and costs of claim processing, investigation and litigation) (hereinafter referred to as "Claims") for bodily injury or personal injury (including death), or loss or damage to tangible or intangible property caused, or alleged to be caused, in whole or in part, by the negligent or willful acts or omissions of Contractor or any of its owners, officers, directors, agents, employees or subcontractors. This indemnity includes any claim or amount arising out of or recovered under the Workers' Compensation Law or arising out of the failure of such contractor to conform to any federal, state or local law, statute, ordinance, rule, regulation or court decree. It is the specific intention of the parties that the Indemnitee shall, in all instances, except for Claims arising solely from the negligent or willful acts or omissions of the Indemnitee, be indemnified by Contractor from and against any and all claims. It is agreed that Contractor will be responsible for primary loss investigation, defense and judgment costs where this indemnification is applicable. In consideration of the award of this contract, the Contractor agrees to waive all rights of subrogation against the County, its officers, officials, agents and employees for losses arising from the work performed by the Contractor for the County.

ARTICLE 4 – INSURANCE REQUIREMENTS: Contractor and subcontractors shall procure and maintain until all of their obligations have been discharged, including any warranty periods under this Contract are satisfied, insurance against claims for injury to persons or damage to property which may arise from or in connection with the performance of the work hereunder by the Contractor, his agents, representatives, employees or subcontractors.

The insurance requirements herein are minimum requirements for this Contract and in no way limit the indemnity covenants contained in this Contract. The County in no way warrants that the minimum limits contained herein are sufficient to protect the Contractor from liabilities that might arise out of the performance of the work under this contract by the Contractor, his agents, representatives, employees or subcontractors and Contractor is free to purchase additional insurance as may be determined necessary.

A. **MINIMUM SCOPE AND LIMITS OF INSURANCE:** Contractor shall provide coverage with limits of liability not less than those stated below.

1. **Commercial General Liability – Occurrence Form**
   Policy shall include bodily injury, property damage and broad form contractual liability coverage.
   - General Aggregate $2,000,000
   - Products – Completed Operations Aggregate $1,000,000
   - Personal and Advertising Injury $1,000,000
   - Each Occurrence $1,000,000

   a. The policy shall be endorsed to include the following additional insured language: **"The County of Gila shall be named as an additional insured with respect to liability arising out of the activities performed by, or on behalf of the Contractor".**

2. **Worker's Compensation and Employers' Liability**

Workers' Compensation	Statutory
Employers' Liability	
Each Accident	$100,000
Disease – Each Employee	$100,000
Disease – Policy Limit	$500,000

   a. Policy shall contain a **waiver of subrogation** against the County of Gila.

3. **Professional Liability (Errors and Omissions Liability)**

Each Claim	$1,000,000
Annual Aggregate	$2,000,000

a. In the event that the professional liability insurance required by this Contract is written on a claims-made basis, Contractor warrants that any retroactive date under the policy shall precede the effective date of this Contract; and that either continuous coverage will be maintained or an extended discovery period will be exercised for a period of two (2) years beginning at the time work under this Contract is completed.

B. **ADDITIONAL INSURANCE REQUIREMENTS:** The policies shall include, or be endorsed to include, the following provisions:

1. On insurance policies where the County of Gila is named as an additional insured, the County of Gila shall be an additional insured to the full limits of liability purchased by the Contractor even if those limits of liability are in excess of those required by this Contract.
2. The Contractor's insurance coverage shall be primary insurance and non-contributory with respect to all other available sources.
3. Coverage provided by the Contractor shall not be limited to the liability assumed under the indemnification provisions of this Contract.

C. **NOTICE OF CANCELLATION:** Each insurance policy required by the insurance provisions of this Contract shall provide the required coverage and shall not be suspended, voided, canceled, reduced in coverage or endorsed to lower limits except after thirty (30) days prior written notice has been given to the County. Such notice shall be sent directly to **Gila County Purchasing Department, 1400 E. Ash St., Globe, AZ, 85501** or and shall be sent by certified mail, return receipt requested.

D. **ACCEPTABILITY OF INSURERS:** Insurance is to be placed with insurers duly licensed or approved unlicensed companies in the state of Arizona and with an "A.M. Best" rating of not less than B+ VI. The County in no way warrants that the above-required minimum insurer rating is sufficient to protect the Contractor from potential insurer insolvency.

E. **VERIFICATION OF COVERAGE:** Contractor shall furnish the County with certificates of insurance (ACORD form or equivalent approved by the County) as required by this Contract. The certificates for each insurance policy are to be signed by a person authorized by that insurer to bind coverage on its behalf.

All certificates and endorsements are to be received and approved by the County before work commences. Each insurance policy required by this Contract must be in effect at or prior to commencement of work under this Contract and remain in effect for the duration of the project. Failure to maintain the insurance policies as required by this Contract or to provide evidence of renewal is a material breach of contract.

All certificates required by this Contract shall be sent directly to **Gila County Purchasing Department, 1400 E. Ash St., Globe, AZ, 85501** or email to dsgroi@co.gila.az.us. The County project/contract number and project description shall be noted on the certificate of insurance. The County reserves the right to require complete, certified copies of all insurance policies required by this Contract at any time.

F. **SUBCONTRACTORS:** Contractors' certificate(s) shall include all subcontractors as additional insured's under its policies **or** Contractor shall furnish to the County separate certificates and endorsements for each subcontractor. All coverage's for subcontractors shall be subject to the minimum requirements identified above.

G. **APPROVAL:** Any modification or variation from the insurance requirements in this Contract shall be made by the County Attorney, whose decision shall be final. Such action will not require a formal Contract amendment, but may be made by administrative action.

ARTICLE 5 – LEGAL ARIZONA WORKERS ACT COMPLIANCE: Contractor hereby warrants that it will at all times during the term of this Contract comply with all federal immigration laws applicable to Contractor's employment of its employees, and with the requirements of A.R.S. § 23-214 (A) (together the "State and Federal Immigration Laws"). Contractor shall further ensure that each subcontractor who performs any work for Contractor under this contract likewise complies with the State and Federal Immigration Laws. County shall have the right at any time to inspect the books and records of Contractor and any subcontractor in order to verify such party's compliance with the State and Federal Immigration Laws.

Any breach of Contractor's or any subcontractor's warranty of compliance with the State and Federal Immigration Laws, or of any other provision of this section, shall be deemed to be a material breach of this Contract subjecting Contractor to penalties up to and including suspension or termination of this Contract. If the breach is by a subcontractor, and the subcontract is suspended or terminated as a result, Contractor shall be required to take such steps as may be necessary to either self-perform the services that would have been provided under the subcontract or retain a replacement subcontractor as soon as possible so as not to delay project completion.

Contractor shall advise each subcontractor of County's rights, and the subcontractor's obligations, under this Article by including a provision in each subcontract substantially in the following form: "Subcontractor hereby warrants that it will at all times during the term of this contract comply with all federal immigration laws applicable to Subcontractor's employees, and with the requirements of A.R.S. § 23-214 (A). Subcontractor further agrees that County may inspect the Subcontractor's books and records to insure that Subcontractor is in compliance with these requirements. Any breach of this paragraph by Subcontractor will be deemed to be a material breach of this contract subjecting Subcontractor to penalties up to and including suspension or termination of this contract."

Any additional costs attributable directly or indirectly to remedial action under this Article shall be the responsibility of Contractor. In the event that remedial action under this Article results in delay to one or more tasks on the critical path of Contractor's approved construction or critical milestones schedule, such period of delay shall be deemed excusable delay for which Contractor shall be entitled to an extension of time, but not costs.

ARTICLE 6 – LAWS AND ORDINANCES: This agreement shall be enforced under the laws of the State of Arizona. Contractor shall maintain in current status all Federal, State and Local licenses and permits required for the operation of the business conducted by the Contractor. The Contractor shall comply with the applicable provisions of the Americans with Disabilities Act (Public Law 101-336, 42 U.S.C. 12101-12213) and applicable federal regulations under the Act.

ARTICLE 7– ANTI-TERRORISM WARRANTY: Pursuant to A.R.S. § 35-393.06(B) and 35-301.06(A) the Contractor certifies that it does not have scrutinized business operations in Iran or Sudan and that they are in compliance with the Export Administration Act and not on the Excluded Parties List.

ARTICLE 8 – CANCELLATION: This agreement is subject to cancellation pursuant to A.R.S. §38-511. If the Agreement is terminated, the county shall be liable only for payment for services rendered and accepted material received by the County before the effective date of termination.

ARTICLE 9 – RELATIONSHIP OF THE PARTIES: Contractor is an independent contractor of the County. Contractor represents that he has or will secure, at his own expense, all personnel required in performing the services under this contract. Such personnel shall not be employees of or have any contractual relationship with the County. All personnel engaged in work under this contract shall be fully qualified and shall be authorized or permitted under State and local law to perform such services.

Contractor warrants that he has obtained or will obtain Worker's Compensation Insurance for his employees working on this contract and that any subcontractors will likewise obtain Worker's Compensation Insurance for of their employees working on this contract. It is further agreed by Contractor that he shall obey all state and federal statutes, rules, and regulations which are applicable to provisions of the services called for herein. Neither Contractor nor any employee of the Contractor shall be deemed an officer, employee, or agent of the County.

ARTICLE 10 – NON-APPROPRIATIONS CLAUSE: Contractor acknowledges that the County is a governmental entity, and the contract validity is based upon the availability of public funding under its authority. In the event that public funds are unavailable and not appropriated for the performance of County's obligations under this contract, then this contract shall automatically expire without penalty to County after written notice to Contractor of the unavailability and non-appropriation of public funds. It is expressly agreed that the County shall only activate this non-appropriation provision as an emergency fiscal measure. The County shall not activate this non-appropriation provision for its convenience, to circumvent the requirements of this contract, or to enable the County to contract with another Contractor for the same supplies or services covered under this Addendum.

ARTICLE 11 – ENTIRE CONTRACT CLAUSE: The Contractor and the County have read this Contract and agree to be bound by all of its terms, and further agree that it constitutes the entire contract between the two parties and may only be modified by a written mutual contract signed by the parties. No oral agreement or oral provision outside this Contract shall have any force or effect.

ARTICLE 12 – NON-WAIVER OF ENFORCEABILITY: Failure of the County to enforce, at any time, any of the provisions of this Contract, or to request at any time performance by Contractor of any of the provisions hereof, shall in no way be construed to be a waiver of such provisions, nor in any way affect the validity of this contract or any part thereof, or the right of the County to enforce each and every provision

ARTICLE 13 – GOVERNING LAW: Both parties agree that this Contract shall be governed by the laws of the state of Arizona. The parties further agree that the jurisdiction for any legal disputes arising out of this Contract shall be the Superior Court of the State of Arizona. The parties agree that even if this Contract does not specifically reference any provision required by state or federal law, those state and federally required provisions are incorporated into this Contract by this reference as though they were specifically listed herein.

ARTICLE 14– TERM: Contract shall be effective date signed by the County Manager and expire 60 days thereafter.

ARTICLE 15 – PAYMENT/BILLING: Contractor shall be paid a flat fee of **$ 20,209.02** for completion of the projects as outlined in the Scope of Services.

All invoices shall be submitted to Gila County Accounts Payable, 1400 E. Ash St, Globe, Arizona and include the following information:

- Purchase Order Number
- Contract Number
- Invoice Number
- Service Location
- Vendor Name and Address
- Description of Service

Any alterations to the scope of work resulting in a change in cost must have prior written approval by the County. Any unauthorized work may result in non-payment to the vendor.

Gila County employs a "Net 15" payment term for services meaning the payment will be issued fifteen (15) days from the date the County receives the invoice from the Contractor. Purchase orders sent to the Contractor reflect these terms and conditions.

The Contractor shall have a current I.R.S. W-9 form on file with the County unless not required by law. The County shall not remit payment if the Contractor does not have a current W-9.

IN WITNESS WHEREOF, Service Agreement No. 011513-4 has been duly executed by the parties hereinabove named, on the date and year first above written.

GILA COUNTY

Don E. McDaniel Jr., County Manager

Date: 1/23/13

POINTE COMPANIES, INC.

Signature

Karl Webster

Print Name

GILA COUNTY COMMUNITY SERVICES DIVISION

Location: 5515 South Apache Ave., Globe, AZ 85501
PHONE: (928) 425-7631 FAX: (928) 425-9468
"Improving the Quality of Life for all Residents"

Gila County Community Action/Housing Services
Weatherization Program

BID RESULTS FORM

Quote Request Date: 1/03/2013 Job Number: 4398

Name: Pearl Powell

Address: 6231 Woodward St.

The following bids were received at the Gila County Housing Services Department, 5515 S. Apache Ave Suite 200, Globe, AZ 85501; at 10:00 ☒am ☐pm. Bidding should be at least 72 hours from the time of the initial request.

NAME OF BIDDER:	VERBAL CONTACT	BID AMOUNT:
Mountain Retreat		$ 42,500.60
Point		$ 20,209.02
Noble		$ 36,162.32
Rodriguez		$ 27,068.89
		$
		$

Person opening bids: Gabriel Eylicio Witness: Nicholas Montaño

Bidder Selected: _____

Supervisor Sign-off Date

Reasonable accommodations for persons with disabilities may be requested.
Countywide TTY (928) 425-0839

Gila County Housing Services
5515 S: Apache Ave.
P.O. Box 1254
Globe Az. 85502
(928)425 - 7631

RESPEC
Work Summary

Case Number: HH #4398

BID TOTAL $: 20,209.02

Property Information:

6231 Woodward St.
Globe AZ 85501

Jurisdiction: Gila County
Target Area: Central Heights
Census: 4.5
Owner:

Pearl Powell
6231 Woodward St.
Globe AZ 85501

Phone: (928)473-1286
Mobile: (928)200-9602

BID OPENING DATE

CONTRACTOR INFORMATION

Name: Keystone Pointe LLC.
Address: 1792 Commerce Drive
Lakeside, AZ 85929

Voice: 928-369-6116
Fax: 877-489-1546
email: brad@pointe-az-com.

Contractor Signature: [signature] Date: 1/2/13

Mobile Home

Unit Info:

Single Family

Powell Pearl
6231 Woodward St. Globe
Phone: (928)473-1286 Work Phone: (928)200-9602

Owner

Printed on: 12/17/2012 10:44:27 AM

RESPEC Estimate Report Case#: HH #4398

Interior | Mobile Home | Single Family |House |General Requirments

1	0000000000	0 NA	0	$ 0.00

Permits and Fees

Contractor to provide all permits and fees required to complete the job to local codes and regulations, including IRC, OSHA, and Gila County Codes.

2	0000000001	0 NA	0	$ 0.00

Alternates and Suggestions

Contractor is encouraged to suggest alternative and better methods to the rehabilitation specialist, and to notify him of items left out or discrepancies. Please use this section to show item and price. Do not add to total.

3	0000000002	0 ea	0	$ 0.00

Performance

All work is to comply with current IRC, or Gila County Building code, Performance Manual guidelines and or local building, electrical and plumbing codes with inspections and permits when applicable.
All work to be done in a quality and PROFESSIONAL manner.
All work to include any items or components required for a complete and functional system. Incidental items not mentioned in the specifications or listed in RESPEC that can reasonably and legitimately be inferred to belong to the work described or be necessary, in good practice to provide a complete system shall be furnished and installed as though called out in every

Interior | Mobile Home | Single Family |House |Roof Repairs

4	0070010001	0 SF	0	$ 6483.61

Tear Off Existing Roof and Install New

Remove existing roofing and pile neatly and haul away immediately. Install Sheathing in order to form a pitch and then install all new flashing at chimney new vent boots valley metal, and install 30# felt paper, aluminum drip edge, a volcanized roofing material.

NOTE: IF EXISTING STRUCTURAL MEMBERS ARE DETERIORATED, ROTTED, DAMAGED, NON-EXISTING, THE CONTRACTOR MUST REPAIR THE AREA PRIOR TO ANY SHEATHING WORK BEING DONE! NO CHANGE ORDER WILL ISSUED FOR THIS ITEM UNLESS CAN BE PROVEN THAT IT WAS UNABLE TO DETERMINED ISSUES TO BUILD UP PRIOR TO STARTING WORK. CHECK THE E-MAIL FOR ANY ADDITIONAL QUESTIONS.

-Roofing material must be a light color and approved by housing services prior to install.

5	0070030002	0 LF	0	$ 1254.71

Install New Gutters and Downspouts

Install new white aluminum seamless spouting and calculated number of outlets and downspouts to accommodate maximum water volumes.
Also install concrete splash blocks or tie into existing storm lines at each downspout exit to minimize erosion.

Interior | Mobile Home | Single Family |House |Siding

6	0010050009	0 S.F.	0	$ 1709.11

Repair or replace Aluminum Siding

RESPEC Estimate Report Case#: HH #4398

Remove all defective or damaged ...ding and repair or replace to match ex...ng. Install ALCOA or approved equal as per manufacturers specifications.

7	0010040003	0 NO	0	$ 412.96

Repair Stairs

Remove all defective materials and replace with new material to match existing. Repair as specified to leave stair system in tight, safe working condition, include handrails ect.

8	0010060015	0 LF	0	$ 989.34

Replace Skirt

Remove existing skirt, and replace with insulating skirting such as the insulated skirting Rapid wall found at westland include all ventaltion as needed to skirting as a kit with auto dampers.

9	0010050002	0 SF	0	$ 2,972.56

Replace Wood Siding

Remove existing siding and replace with new horizontal or vertical beveled siding. Include sheathing paper chalk and Trim. Install as per manufacturer's recommendation.

Interior | Mobile Home | Single Family |House |Windows

10	0010100028	0	0	$ 1731.63

Replace aluminum windows

Replace the old windows with aluminum framed, double pane Low E, single hung sliders. All trim work

Interior | Mobile Home | Single Family |House |Door

11	0010090002	0 NO	0	$ 887.42

Install Exterior Door including Security

Provide and install white, preprimed steel insulated raised panel exterior 1-3/4" solid core door,(Pease, Thermatru, Stanley or approved equal). Include keyed lockset, doorstop, deadbolt, and vinyl bubble weather-stripping. Owner to paint if desired.
Provide and install white, prefinished metal security door with dead bolt and knob to match panel door. Swing to complement exterior door. Caulk where necessary.

Interior | Mobile Home | Single Family |House |Cooling system

12	0180050051	0	0	$ 1099.32

REPLACE THE WINDOW COOLER.

Replace the window cooler with same size or upgraded size. Must be on a stand and chain kit. Reconnect to existing water and power. Interior cooler throat must be framed with wood and plexi glass used where possible for look retention.

Interior | Mobile Home | Single Family |House |Ceiling

13	0010120121	0	0	$ 589.82

Patch holes

Patch holes in the sheet rock in all walls, ceilings and replace insulation as needed in repaired areas. Tapped and textured to match existing. No painting unless approved. Must use a Blower door during Air

Interior | Mobile Home | Single Family |House |Floor

14	0030020002	0 SF	0	$ 425.93

Repair Subfloor

Remove all defective materials and replace with with plywood to match existing in dimension.

No new flooring unless, approved by rehab specialist prior to install.

RESPEC Estimate Report Case#: HH #4398

Interior | Mobile Home | Single Family |House |Plumbing Repairs

15	0130060002	0 NO	0	$ 1159.38

Replace Hot Water Heater

Remove and dispose of old unit and install new 40 gallon energy-efficient unit to code.
1) Include new shut off valve.
2) Install with new water flex lines.
3) Install a drain line from the pop-off valve to below the floor level, then horizontally in sight
4) Install to include dielectric unions
5) Repair electrical as needed.
6) Repair cabinet and seal to meet WAP Standards.

Interior | Mobile Home | Single Family |House |Stove

16	0330010010	0	0	$ 493.27

Stove

Replace the old stove with a new, electric model include new cord and verify operation record ppm's.

Total for: House $ 1699.99

Total for: Interior $ 1509.03

Job Total Cost: $ 20,209.02

Printed on: 12/17/2012 10:44:27 AM

Tommie C. Martin, District I
P.O. Box 2297 Payson, AZ. 85547
(928) 474-2029

Michael A. Pastor, District II
1400 E. Ash St. Globe, AZ. 85501
(928) 425-3231 Ext. 8753

John Marcantl, District III
1400 E. Ash St. Globe, AZ. 85501
(928) 425-3231 Ext. 8511

GILA COUNTY
www.gilacountyaz.gov

Don E. McDaniel Jr., County Manager
Phone (928) 425-3231 Ext.8761

Joseph T. Heatherly, Finance Director
Phone (928) 425-3231 Ext. 8743

1400 E. Ash Street
Globe, AZ 85501

SERVICE AGREEMENT NO. 011713

WEATHERIZATION PROJECT NO. HH#8279

THIS AGREEMENT, made and entered into this 23RD day of JANUARY, **2013,** by and between Gila County, a political subdivision of the State of Arizona hereinafter designated the County, and **Noble Building LLC**, of the City of Payson, State of Arizona, hereinafter designated the Contractor.

WITNESSETH: The Contractor, for and in consideration of the sum to be paid him by the County, in the manner and at the time hereinafter provided, and of the other covenants and agreement's herein contained, hereby agrees, for himself, his heirs, administrators, successors, and assigns as follows:

ARTICLE 1 – SCOPE OF SERVICES: The Contractor shall provide the services and products listed in the Scope of Work below for Weatherization Project HH#8279, and shall do so in a good, workmanlike, and substantial manner and to the satisfaction of the County under the direction of the Housing Services Manager or designee.

All work performed by the Contractor shall be completed to local codes and regulation per Gila County and the State of Arizona and consistent with all Weatherization guidelines.

Scope of Work: Refer to attached Attachment "A" by mention made a binding part of this agreement as set forth herein.

Contractor Fee's: Refer to Attachment "A" by mention made a binding part of this agreement as set forth herein. Contractor will be paid fifty (50) percent upon presentation of an invoice at the beginning of the project, and the remaining fifty (50) percent upon presentation of an invoice upon completion of the project.

ARTICLE 2 – TERMINATION: The County reserves the right to terminate the Contract, in whole or in part at any time, when in the best interest of the County, without penalty or recourse. Upon receipt of the written notice, the Contractor shall stop all work as directed in the notice. If the contract is terminated, the County shall be liable only for the services rendered under this contract and accepted material received by the County before the effective date of termination.

ARTICLE 3 - INDEMNIFICATION: Contractor shall indemnify, defend, save and hold harmless the County of Gila and its officers, officials, agents, and employees (hereinafter referred to as "Indemnitee") from and against any and all claims, actions, liabilities, damages, losses, or expenses (including court costs, attorneys' fees, and costs of claim processing, investigation and litigation) (hereinafter referred to as "Claims") for bodily injury or personal injury (including death), or loss or damage to tangible or intangible property caused, or alleged to be caused, in whole or in part, by the negligent or willful acts or omissions of Contractor or any of its owners, officers, directors, agents, employees or subcontractors. This indemnity includes any claim or amount arising out of or recovered under the Workers' Compensation Law or arising out of the failure of such contractor to conform to any federal, state or local law, statute, ordinance, rule, regulation or court decree. It is the specific intention of the parties that the Indemnitee shall, in all instances, except for Claims arising solely from the negligent or willful acts or omissions of the Indemnitee, be indemnified by Contractor from and against any and all claims. It is agreed that Contractor will be responsible for primary loss investigation, defense and judgment costs where this indemnification is applicable. In consideration of the award of this contract, the Contractor agrees to waive all rights of subrogation against the County, its officers, officials, agents and employees for losses arising from the work performed by the Contractor for the County.

ARTICLE 4 – INSURANCE REQUIREMENTS: Contractor and subcontractors shall procure and maintain until all of their obligations have been discharged, including any warranty periods under this Contract are satisfied, insurance against claims for injury to persons or damage to property which may arise from or in connection with the performance of the work hereunder by the Contractor, his agents, representatives, employees or subcontractors.

The insurance requirements herein are minimum requirements for this Contract and in no way limit the indemnity covenants contained in this Contract. The County in no way warrants that the minimum limits contained herein are sufficient to protect the Contractor from liabilities that might arise out of the performance of the work under this contract by the Contractor, his agents, representatives, employees or subcontractors and Contractor is free to purchase additional insurance as may be determined necessary.

A. **MINIMUM SCOPE AND LIMITS OF INSURANCE:** Contractor shall provide coverage with limits of liability not less than those stated below.

1. **Commercial General Liability – Occurrence Form**
   Policy shall include bodily injury, property damage and broad form contractual liability coverage.
   - General Aggregate $2,000,000
   - Products – Completed Operations Aggregate $1,000,000
   - Personal and Advertising Injury $1,000,000
   - Each Occurrence $1,000,000

   a. The policy shall be endorsed to include the following additional insured language: **"The County of Gila shall be named as an additional insured with respect to liability arising out of the activities performed by, or on behalf of the Contractor".**

2. **Worker's Compensation and Employers' Liability**

Workers' Compensation	Statutory
Employers' Liability	
Each Accident	$100,000
Disease – Each Employee	$100,000
Disease – Policy Limit	$500,000

   a. Policy shall contain a **waiver of subrogation** against the County of Gila.

3. **Professional Liability (Errors and Omissions Liability)**

Each Claim	$1,000,000
Annual Aggregate	$2,000,000

a. In the event that the professional liability insurance required by this Contract is written on a claims-made basis, Contractor warrants that any retroactive date under the policy shall precede the effective date of this Contract; and that either continuous coverage will be maintained or an extended discovery period will be exercised for a period of two (2) years beginning at the time work under this Contract is completed.

B. **ADDITIONAL INSURANCE REQUIREMENTS:** The policies shall include, or be endorsed to include, the following provisions:

1. On insurance policies where the County of Gila is named as an additional insured, the County of Gila shall be an additional insured to the full limits of liability purchased by the Contractor even if those limits of liability are in excess of those required by this Contract.
2. The Contractor's insurance coverage shall be primary insurance and non-contributory with respect to all other available sources.
3. Coverage provided by the Contractor shall not be limited to the liability assumed under the indemnification provisions of this Contract.

C. **NOTICE OF CANCELLATION:** Each insurance policy required by the insurance provisions of this Contract shall provide the required coverage and shall not be suspended, voided, canceled, reduced in coverage or endorsed to lower limits except after thirty (30) days prior written notice has been given to the County. Such notice shall be sent directly to **Gila County Purchasing Department, 1400 E. Ash St., Globe, AZ, 85501** or and shall be sent by certified mail, return receipt requested.

D. **ACCEPTABILITY OF INSURERS:** Insurance is to be placed with insurers duly licensed or approved unlicensed companies in the state of Arizona and with an "A.M. Best" rating of not less than B+ VI. The County in no way warrants that the above-required minimum insurer rating is sufficient to protect the Contractor from potential insurer insolvency.

E. **VERIFICATION OF COVERAGE:** Contractor shall furnish the County with certificates of insurance (ACORD form or equivalent approved by the County) as required by this Contract. The certificates for each insurance policy are to be signed by a person authorized by that insurer to bind coverage on its behalf.

All certificates and endorsements are to be received and approved by the County before work commences. Each insurance policy required by this Contract must be in effect at or prior to commencement of work under this Contract and remain in effect for the duration of the project. Failure to maintain the insurance policies as required by this Contract or to provide evidence of renewal is a material breach of contract.

All certificates required by this Contract shall be sent directly to **Gila County Purchasing Department, 1400 E. Ash St., Globe, AZ, 85501** or email to dsgroi@co.gila.az.us. The County project/contract number and project description shall be noted on the certificate of insurance. The County reserves the right to require complete, certified copies of all insurance policies required by this Contract at any time.

F. **SUBCONTRACTORS:** Contractors' certificate(s) shall include all subcontractors as additional insured's under its policies **or** Contractor shall furnish to the County separate certificates and endorsements for each subcontractor. All coverage's for subcontractors shall be subject to the minimum requirements identified above.

G. **APPROVAL:** Any modification or variation from the insurance requirements in this Contract shall be made by the County Attorney, whose decision shall be final. Such action will not require a formal Contract amendment, but may be made by administrative action.

ARTICLE 5 – LEGAL ARIZONA WORKERS ACT COMPLIANCE: Contractor hereby warrants that it will at all times during the term of this Contract comply with all federal immigration laws applicable to Contractor's employment of its employees, and with the requirements of A.R.S. § 23-214 (A) (together the "State and Federal Immigration Laws"). Contractor shall further ensure that each subcontractor who performs any work for Contractor under this contract likewise complies with the State and Federal Immigration Laws. County shall have the right at any time to inspect the books and records of Contractor and any subcontractor in order to verify such party's compliance with the State and Federal Immigration Laws.

Any breach of Contractor's or any subcontractor's warranty of compliance with the State and Federal Immigration Laws, or of any other provision of this section, shall be deemed to be a material breach of this Contract subjecting Contractor to penalties up to and including suspension or termination of this Contract. If the breach is by a subcontractor, and the subcontract is suspended or terminated as a result, Contractor shall be required to take such steps as may be necessary to either self-perform the services that would have been provided under the subcontract or retain a replacement subcontractor as soon as possible so as not to delay project completion.

Contractor shall advise each subcontractor of County's rights, and the subcontractor's obligations, under this Article by including a provision in each subcontract substantially in the following form: "Subcontractor hereby warrants that it will at all times during the term of this contract comply with all federal immigration laws applicable to Subcontractor's employees, and with the requirements of A.R.S. § 23-214 (A). Subcontractor further agrees that County may inspect the Subcontractor's books and records to insure that Subcontractor is in compliance with these requirements. Any breach of this paragraph by Subcontractor will be deemed to be a material breach of this contract subjecting Subcontractor to penalties up to and including suspension or termination of this contract."

Any additional costs attributable directly or indirectly to remedial action under this Article shall be the responsibility of Contractor. In the event that remedial action under this Article results in delay to one or more tasks on the critical path of Contractor's approved construction or critical milestones schedule, such period of delay shall be deemed excusable delay for which Contractor shall be entitled to an extension of time, but not costs.

ARTICLE 6 – LAWS AND ORDINANCES: This agreement shall be enforced under the laws of the State of Arizona. Contractor shall maintain in current status all Federal, State and Local licenses and permits required for the operation of the business conducted by the Contractor. The Contractor shall comply with the applicable provisions of the Americans with Disabilities Act (Public Law 101-336, 42 U.S.C. 12101-12213) and applicable federal regulations under the Act.

ARTICLE 7– ANTI-TERRORISM WARRANTY: Pursuant to A.R.S. § 35-393.06(B) and 35-301.06(A) the Contractor certifies that it does not have scrutinized business operations in Iran or Sudan and that they are in compliance with the Export Administration Act and not on the Excluded Parties List.

ARTICLE 8 – CANCELLATION: This agreement is subject to cancellation pursuant to A.R.S. §38-511. If the Agreement is terminated, the county shall be liable only for payment for services rendered and accepted material received by the County before the effective date of termination.

ARTICLE 9 – RELATIONSHIP OF THE PARTIES: Contractor is an independent contractor of the County. Contractor represents that he has or will secure, at his own expense, all personnel required in performing the services under this contract. Such personnel shall not be employees of or have any contractual relationship with the County. All personnel engaged in work under this contract shall be fully qualified and shall be authorized or permitted under State and local law to perform such services. Contractor warrants that he has obtained or will obtain Worker's Compensation Insurance for his employees working on this contract and that any subcontractors will likewise obtain Worker's Compensation Insurance for of their employees working on this contract. It is further agreed by Contractor that he shall obey all state and federal statutes, rules, and regulations which are applicable to provisions of the services called for herein. Neither Contractor nor any employee of the Contractor shall be deemed an officer, employee, or agent of the County.

ARTICLE 10 – NON-APPROPRIATIONS CLAUSE: Contractor acknowledges that the County is a governmental entity, and the contract validity is based upon the availability of public funding under its authority. In the event that public funds are unavailable and not appropriated for the performance of County's obligations under this contract, then this contract shall automatically expire without penalty to County after written notice to Contractor of the unavailability and non-appropriation of public funds. It is expressly agreed that the County shall only activate this non-appropriation provision as an emergency fiscal measure. The County shall not activate this non-appropriation provision for its convenience, to circumvent the requirements of this contract, or to enable the County to contract with another Contractor for the same supplies or services covered under this Addendum.

ARTICLE 11 – ENTIRE CONTRACT CLAUSE: The Contractor and the County have read this Contract and agree to be bound by all of its terms, and further agree that it constitutes the entire contract between the two parties and may only be modified by a written mutual contract signed by the parties. No oral agreement or oral provision outside this Contract shall have any force or effect.

ARTICLE 12 – NON-WAIVER OF ENFORCEABILITY: Failure of the County to enforce, at any time, any of the provisions of this Contract, or to request at any time performance by Contractor of any of the provisions hereof, shall in no way be construed to be a waiver of such provisions, nor in any way affect the validity of this contract or any part thereof, or the right of the County to enforce each and every provision

ARTICLE 13 – GOVERNING LAW: Both parties agree that this Contract shall be governed by the laws of the state of Arizona. The parties further agree that the jurisdiction for any legal disputes arising out of this Contract shall be the Superior Court of the State of Arizona. The parties agree that even if this Contract does not specifically reference any provision required by state or federal law, those state and federally required provisions are incorporated into this Contract by this reference as though they were specifically listed herein.

ARTICLE 14– TERM: Contract shall be effective date signed by the County Manager and expire 60 days thereafter.

ARTICLE 15 – PAYMENT/BILLING: Contractor shall be paid a flat fee of **$9,182.25** for completion of the projects as outlined in the Scope of Services.

All invoices shall be submitted to Gila County Accounts Payable, 1400 E. Ash St, Globe, Arizona and include the following information:

- Purchase Order Number
- Contract Number

- Invoice Number
- Service Location
- Vendor Name and Address
- Description of Service

Any alterations to the scope of work resulting in a change in cost must have prior written approval by the County. Any unauthorized work may result in non-payment to the vendor.

Gila County employs a "Net 15" payment term for services meaning the payment will be issued fifteen (15) days from the date the County receives the invoice from the Contractor. Purchase orders sent to the Contractor reflect these terms and conditions.

The Contractor shall have a current I.R.S. W-9 form on file with the County unless not required by law. The County shall not remit payment if the Contractor does not have a current W-9.

IN WITNESS WHEREOF, Service Agreement No. 011713 has been duly executed by the parties hereinabove named, on the date and year first above written.

GILA COUNTY

Don E. McDaniel Jr., County Manager

Date: 1/23/13

NOBLE BUILDING LLC

Signature

J. Byron Tanenhaus

Print Name

GILA COUNTY COMMUNITY SERVICES DIVISION

Location: 5515 South Apache Ave., Globe, AZ 85501
PHONE: (928) 425-7631 FAX: (928) 425-9468
"Improving the Quality of Life for all Residents"

Gila County Community Action/Housing Services
Weatherization Program

BID RESULTS FORM

Quote Request Date: 1-15-13 Job Number: 8179

Name: Trina Stoch

Address: 175 N Fitch Lane PAYSON Az 85541

The following bids were received at the Gila County Housing Services Department, 5515 S. Apache Ave Suite 200, Globe, AZ 85501; at 11:13 ☒am ☐pm. Bidding should be at least 72 hours from the time of the initial request.

NAME OF BIDDER:	VERBAL CONTACT	BID AMOUNT:
Rodriguez Construction		$ No bid
Mountain Retreat		$ No bid
Noble Building		$ 9,182.25
		$
		$
		$

Person opening bids: Nicholas Montoya Witness: Gabriel E. Eglicio

Bidder Selected: Noble Building

Supervisor Sign-off 1/15/13 Date

Reasonable accommodations for persons with disabilities ...

Governor's
Office of Energy Policy

ARIZONA GOVERNOR'S OFFICE OF ENERGY POLICY (OEP)
WEATHERIZATION ASSISTANCE PROGRAM

PRIOR APPROVAL BY OEP FIELD REPRESENTATIVE

Name of Weatherization Subgrantee: Gila County

Client's Name Trina Stock Address 175 N. Fitch Lane Payson

is hereby authorized for:

This waiver was must be approved by OEP staff PRIOR to the commencement of ANY WORK.

☒ Replacement of heating or cooling equipment not indicated by audit. REM Design (.blg) file to be submitted with waiver form.

☒ Site Specific REM Design for dwellings. (For use when not using priority lists.)

☐ Switching of any fuel source.

☐ Evaporative cooling switched to central air conditioning. (Requires doctor's note and must be charged to subgrantee's health and safety budget only)

☐ Change in order of single family priority list.

☒ Change in order of mobile home priority list.

☐ Completion of measures with a SIR of less than one prior to completion of all higher SIR measures. REM Design (.blg) file to be submitted with waiver form.

☐ Re-weatherization of a building weatherized after September 30, 1994.

☐ Other: Please Describe

Reason for waiver or additional notes:
Heating in home very expensive to use electric resistant heat purposed to heat pump and also provides cooling which allows use to address infiltration better and balance air flow.

Total Cost: $9,182.25

Funding Source: APS, LIHEAP, URRD

Signature of OEP Field Representative: _____ Date: 1-14-13

Signature of OEP Program Manager: _____ Date: 1-15-13

IMPROVEMENT ANALYSIS REPORT

Building Name:	HH#8279	Date:	January 11, 2013
Owner's Name:	Trina Stock	Builder's Name:	Noble Building llc
Property Address:	175 N. Fitch Lane Payson, AZ 85541	Weather Site: File Name:	Payson, AZ Stock Trina.blg

Energy Costs ($/yr)

End-Use	As Is	With All Improvements	Savings
Heating	1629	509	1120
Cooling	0	153	-153
Hot Water	392	392	0
Lights and Appliances	690	690	0
Photovoltaics	-0	-0	0
Service Charge	60	60	0
TOTAL	2771	1804	967

Total Costs ($/yr)

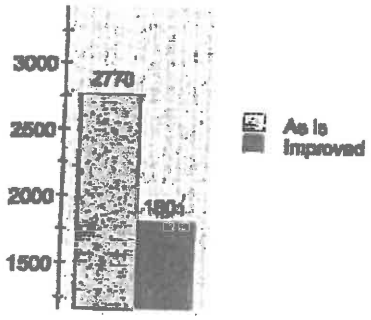

Information For Lenders and Appraisers

Installed Cost of Improvements ($)	7900
Cost Weighted Life of Measure (Years)	17
Mortgage Term (Years)	0
Discount/Mortgage Rate (%)	2.000
Present Value Factor	14.6
Expected Annual Energy Savings ($)	967
Expected Annual Maintenance Costs ($)	0
Expected Annual Savings ($)	967
Increased Annual Mortgage Costs ($)	0
Present Value of Savings ($)	14100
Expected Annual Cash Flow ($)	967

Cost Comparison ($/yr)

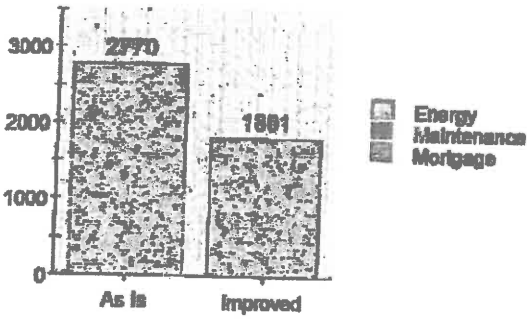

This Information does not constitute any warranty of energy cost or savings.
© 1985-2012 Architectural Energy Corporation, Boulder, Colorado.

IMPROVEMENT ANALYSIS REPORT

HH#8279

Recommended Improvements

Component	Life	Cost	SIR
1. Ceiling 1: Attic	20	2000	2.6
Existing: Mobile Home Ceiling			
Proposed: R-38 Blown, Attic*			
Measure: Increase by R-33*			
2. Infiltration:	20	1700	2.3
Existing: 1302-1952/1302-1952 CFM50			
Proposed: 100/100 As Specified			
Measure: Achieve 0.4ACH*			
3. Equip 1: HEAT:	15	4100	1.3
Existing: 25 kw elec res heat*****			
Proposed: 48k 14seer 8.5hspf*			
Measure: 4t elec Res to 2.5T HP*			
4. Leakage 1:	20	100	0.4
Existing: Tot 64-96 CFM50			
Proposed: Tot 50 As Specified			
Measure: 50 cfm Duct sealing*			

Criteria

Ranking Criteria: SIR	Maximum $ Limit: No Limit
Cutoff: 0	Measures: Interactive

This information does not constitute any warranty of energy cost or savings.
© 1985-2012 Architectural Energy Corporation, Boulder, Colorado.

HVAC Equipment Efficiency Calculator

Gas/Oil Furnace's (AFUE)	Actual	Base AFUE	Maintenance Factor	Age of Equipment	Loss of Efficiency
		0	0.015	0	#DIV/0!
		User Input Required			

FOR A/C or Heatpumps (SEER / EER / HSPF)	Actual	Base SEER	Maintenance Factor	Age of Equipment	Loss of Efficiency
		10	0.01	3	3%
		User Input Required			

$EFF = (Base\ EFF) \times (1 - M)^{10}$

Base EFF = Typical efficiency of Pre-Retrofit equipment when new (SEER, EER, or HSPF)
M = Maintenance Factor (see appropriate tables for factor)
Age = Age of equipment in years.

*The default air-conditioner and heat pump efficiencies in the tables may be used if the actual efficiency cannot be calculated or measured.

Source: Department of Energy
http://www.nrel.gov/buildings/pdfs/38238.pdf
Building America Performance Analysis Procedures for Existing Homes

Existing Furnace is a 3year old electric resistant heater with an A coil that will be cleaned and a used to make furnace a H/P

832191

CUSTOMER'S ORDER NO.	DEPARTMENT	DATE

NAME Irving Stock HH# 8279

ADDRESS 175 N. Fitch Lane

CITY, STATE, ZIP Payson, Az 85541

SOLD BY	CASH	C.O.D.	CHARGE	ON ACCT.	MDSE. RET'D.	PAID OUT

	QUANTITY	DESCRIPTION	PRICE	AMOUNT
1	1-15-13	@1113 called Rodriguez Construction, left		
2		message.	NWM	
3				
4	1-15-13	@1116 called Mountain Retreat, "No"		
5			NWM	
6	1-15-13	@1203 Rodriguez Construction called and		
7		said "Not interested"	NWM	
8				
9	2-27-13	Noble Building sent bid of	$9,182.25	
10			NWM	
11				
12				
13				
14				
15				
16				
17				
18				

RECEIVED BY

KEEP THIS SLIP FOR REFERENCE

NOBLE BUILDING, L.L.C.
236 W. Thompson Road
PAYSON, AZ 85541

Estimate

12/27/2012

HH68278
175 N. Fitch Lane
Payson AZ 85541

P.O. No.

Description	Total
1) Utilize existing air handler and add a new HP condenser on the exterior of the home and remove a 10kw heat strip. Converting the existing 25kw electric resistant heater into a 4t 14SEER HP with a 10kw back up heat strip and pressure balance bedrooms.	4,100.00T
2) Bring attic up to an R-38 in entire attic	2,000.00T
3) Infiltration	1,700.00T
4) Seal all ductwork to 1 Pascal or less	100.00T
5) No cost low cost- WH blanket, CFLs, Low flow shower head, weather strip, 2- aerators, Air filters,	250.00T
6)Electrical repairs (health and safety)- correct wiring to ceiling fan, repair EPVC connection a existing 200amp electrical panel	800.00T

Accepted_____

Subtotal	$8,750.00
Sales Tax (4.94%)	$432.25
Total	$9,182.25

excepted _____

Phone # (928) 478-8059 Fax # (928) 478-4514 noblebuildingllc@yahoo.com

NOBLE BUILDING, L.L.C.
236 W. Thompson Road
PAYSON, AZ 85541

Scope of Work

12/27/2012

HH#8279
175 N. Fitch Lane
Payson AZ 85541

P.O. No.

Description
1) Utilize existing air handler and add a new HP condenser on the exterior of the home and remove a 15kw heat strip. Converting the existing 25kw electric resistant heater into a 4t 14SEER HP with a 10kw back up heat strip and pressure balance bedrooms. 2) Bring attic up to an R-38 in entire attic 3) Infiltration 4) Seal all ductwork to 1 Pascal or less 5) No cost low cost- WH blanket, CFLs, Low flow shower head, weather strip, 2- aerators, Air filters, 6)Electrical repairs (health and safety)- correct wiring to ceiling fan, repair PVC connection a existing 200amp electrical panel Sales Tax Gila County

Accepted_____

Phone # (928) 478-0056 Fax # (928) 478-4514 nobleBuildingllc@yahoo.com