PURSUANT TO A.R.S. SECTION 38-431 THE GILA COUNTY BOARD OF SUPERVISORS WILL HOLD AN OPEN MEETING IN THE SUPERVISORS' AUDITORIUM, 1400 EAST ASH STREET, GLOBE, ARIZONA. ONE OR MORE BOARD MEMBERS MAY PARTICIPATE IN THE MEETING BY TELEPHONE CONFERENCE CALL OR BY INTERACTIVE TELEVISION VIDEO (ITV). **ANY MEMBER OF THE PUBLIC IS WELCOME TO ATTEND THE MEETING VIA ITV WHICH IS HELD AT 610 E. HIGHWAY 260, BOARD OF SUPERVISORS' CONFERENCE ROOM, PAYSON, ARIZONA.** THE AGENDA IS AS FOLLOWS:

REGULAR MEETING - TUESDAY, AUGUST 7, 2012 - 10 A.M.

1 Call to Order - Pledge of Allegiance – Invocation

2 **PUBLIC HEARINGS:**

A Public Hearing-Information/Discussion/Action to adopt Resolution No. 12-08-01, which approves Gila County Planning and Zoning Case No. CUP-12-02, an application submitted by Stephanie Marr requesting use of Gila County Assessor's tax parcel numbers 205-21-041 through -046 as a swap meet on Fridays and Saturdays from 8:00 a.m. to 5:00 p.m.
(Robert Gould)

B Public Hearing-Information/Discussion/Action to adopt Resolution No. 12-08-02, which approves Gila County Planning and Zoning Case No. CUP-12-01, an application submitted by David Stoghill, agent for owner, Donald Garvin, requesting to operate a vehicle dismantling and metal recycling business on Gila County Assessor's tax parcel number 304-32-003A.
(Robert Gould)

3 **REGULAR AGENDA ITEMS:**

A Information/Discussion/Action to adopt Proclamation No. 12-06 proclaiming August 1-31, 2012, as Child Support Awareness Month in Gila County.
(Jeff Dalton)

B **(Motion to adjourn as the Board of Supervisors and convene as the Gila County Library District Board of Directors.)**
Information/Discussion/Action to approve Library Service Agreements between the Gila County Library District and the following libraries to cooperate in the provision of library services to the citizens of the District for the period July 1, 2012 through June 30, 2013: Hayden Public Library - match up to $52,100; Isabelle Hunt Memorial Library - fund $104,750; Miami Memorial Library - match up to $43,600; Payson Public Library - match up to $229,230; Tonto Basin Public Library - fund $60,950; and Young Public Library - fund $57,670.
(John Nelson)
(Motion to adjourn as the Library district Board of Directors and reconvene as the Board of Supervisors.)

C Information/Discussion/Action to approve an Intergovernmental Agreement (Contract No. A.G. P001-2012-001854) between the Arizona Department of Public Safety and the Gila County Sheriff's Office in the amount of $25,000 for the period of July 1, 2012, to December 31, 2012, in order to provide overtime pay for Sheriff's Office deputies/officers under the Domestic Cannabis Eradication/Suppression Program. **(Johnny Sanchez)**

D Information/Discussion/Action to authorize the advertisement of Invitation for Bids No. 032712-1 for the Russell Road Reconstruction Project. **(Joseph Heatherly)**

E Information/Discussion/Action to authorize the quarterly posting of a public notice of on-line auction of surplus materials in the Arizona Silver Belt newspaper per A.R.S. §11-251[9]. **(Joseph Heatherly)**

4 **CONSENT AGENDA ACTION ITEMS:**

A Approval of an Annual Equitable Sharing Agreement and Certification Report between the Gila County Sheriff's Office, U.S. Department of Justice, and U.S. Department of Treasury to participate in the federal equitable sharing program for fiscal year 2011-2012, all of which pertains to the use of federally forfeited cash, property, proceeds and any interest earned thereon.

B Approval of an Arizona Criminal Justice Commission Drug, Gang and Violent Crime Control Grant Agreement (FY 2013 Grant Cycle 26 Award - ACJC Grant No. DC-13-036) awarded to the Gila County Sheriff's Office to provide continued funding for the Gila County Drug, Gang and Violent Crime Task Force in the amount of $344,288 ($181,784 in federal funds, $93,646 in state funds and $68,858 in matching funds from the Sheriff's Office Specialized Funds) for the period July 1, 2012, through June 30, 2013.

C Approval of Amendment No. 3 to an Intergovernmental Agreement (Contract No. DE101056001) between the Arizona Department of Economic Security and Gila County pursuant to Paragraph 33.3 Termination, Section 3.3.1 at the Contractor's request and mutually agreed upon by both parties, the contract is terminated effective July 1, 2012.

D Approval of Amendment No. 4 to Contract No. A11PC00100 between the Bureau of Indian Affairs and Gila County, on behalf of the Gila County Juvenile Detention Center, decreasing the total contract amount by $17,000 for a grand total contract amount of $83,400 for payment coverage of continuing detention services.

E Approval of Amendment No. 3 to Intergovernmental Agreement (Contract No. HG060003) between the Arizona Department of Health Services and the Gila County Division of Health and Emergency Services in the amount of $135,000 to extend tobacco free services from July 1, 2012, through June 30, 2013.

F Approval of a Weatherization Low Income Assistance Agreement (OEP Contract No. EW-ESA-12-2182-02Y2) between the State of Arizona, Governor's Office of Energy Policy, and the Gila County Division of Community Services, Housing Services, to continue to provide weatherization services to eligible citizens residing in Gila County, using the remaining unspent Department of Energy funds assigned to the Gila County Weatherization Program from Fiscal Year 2012; amount to be determined and contract is effective upon signature by both parties through June 30, 2013.

G Approval of Amendment No. 5 to an Intergovernmental Agreement (Contract No. DE111073001) between the Arizona Department of Economic Security and Gila County Division of Community Services, Housing Services, requiring Contractors and subcontractor staff who are required or allowed to provide services directly to juveniles or vulnerable adults to possess a fingerprint clearance card that meets Level One requirements effective on the date of last signature through June 30, 2013.

H Approval of Intergovernmental Agreements for Election Services between Gila County and the Pine Creek Canyon Domestic Water Improvement District and between Gila County and the Rim Trail Domestic Water Improvement District to provide election services.

I Adoption of an Order canceling precinct elections and appointing the precinct committeemen shown on Attachment A attached to Order who have filed nomination petitions or nominating papers for precinct committeeman of their party in the precinct shown.

J Approval of an Intergovernmental Agreement for Election Services between Gila County and the Whispering Pines Domestic Water Improvement District.

K Approval of an Intergovernmental Agreement for Election Services between Gila County and the Gila County School Superintendent.

L Approval of an Intergovernmental Agreement for Election Services between Gila County and the Pine-Strawberry Water Improvement District.

M Acknowledgment of the Beaver Valley Fire District Governing Board's appointment of Ms. Pat Walker to fill the board vacancy created by the passing of member Joyce Lynch. Ms. Pat Walker will complete the term that expires November 30, 2014.

N Acknowledgment of the resignation of Mr. Robert O'Brien from the Northern Gila County Sanitary District Governing Board and the appointment of Mr. Bill Easton to complete the term of Mr. O'Brien, which expires November 30, 2014.

O Acknowledgment of the resignation of Mr. Jerry Nicholas from the Beaver Valley Domestic Water Improvement District and the appointment of Mr. Scott Smith to complete the term of Mr. Nicholas which expires November 30, 2012.

P Approval of the appointment of Judge Charles Adornetto as Justice of the Peace Pro Tempore of the Globe and Payson Regional Justice Courts for a period of five months from August 1, 2012, through December 31, 2012.

Q Approval to accept the updated and corrected membership list for the Gila County Community Action Program Advisory Board.

R Approval of a request by the Payson Rodeo Committee, a non-profit organization, for the use of the Payson Court Complex grounds for a Chili Cook Off on September 15, 2012, from 8:00 a.m. to 6:00 p.m.

S Approval of the June 2012 monthly activity report submitted by the Payson Regional Constable.

T Approval of the fiscal year 2011-2012 annual activity report submitted by the Payson Regional Constable.

U Approval of the June 2012 monthly activity report submitted by the Globe Regional Justice Court.

V Approval of the June 2012 monthly activity report submitted by the Payson Regional Justice of the Peace.

W Approval of the June 2012 monthly activity report submitted by the Recorder's Office.

X Approval of the June 26, 2012, BOS meeting minutes.

Y Approval of the Human Resources reports for the weeks of July 3, 2012, July 10, 2012, July 17, 2012, July 24, 2012 and July 31, 2012.

Z Acknowledgment of contracts under $50,000 which have been approved by the County Manager for the weeks of June 30, 2012, to July 6, 2012, July 7, 2012, to July 13, 2012, and July 14, 2012 to July 20, 2012.

AA Approval of finance reports/demands/transfers for the weeks of July 24, 2012, July 31, 2012, and August 7, 2012.

5 **CALL TO THE PUBLIC:** Call to the Public is held for public benefit to allow individuals to address issue(s) within the Board's jurisdiction. Board members may not discuss items that are not specifically identified on the agenda. Therefore, pursuant to Arizona Revised Statute §38-431.01(G), action taken as a result of public comment will be limited to directing staff to study the matter, responding to criticism, or scheduling the matter for further discussion and decision at a future date.

6 At any time during this meeting pursuant to A.R.S. §38-431.02(K), members of the Board of Supervisors and the Chief Administrator may present a brief summary of current events. No action may be taken on issues presented.

IF SPECIAL ACCOMMODATIONS ARE NEEDED, PLEASE CONTACT THE RECEPTIONIST AT (928) 425-3231 AS EARLY AS POSSIBLE TO ARRANGE THE ACCOMMODATIONS. FOR TTY, PLEASE DIAL 7-1-1 TO REACH THE ARIZONA RELAY SERVICE AND ASK THE OPERATOR TO CONNECT YOU TO (928) 425-3231.

THE BOARD MAY VOTE TO HOLD AN EXECUTIVE SESSION FOR THE PURPOSE OF OBTAINING LEGAL ADVICE FROM THE BOARD'S ATTORNEY ON ANY MATTER LISTED ON THE AGENDA PURSUANT TO A.R.S. SECTION 38-431.03(A)((3)

THE ORDER OR DELETION OF ANY ITEM ON THIS AGENDA IS SUBJECT TO MODIFICATION AT THE MEETING

ARF-1327 **Public Hearing 2- A**

Regular BOS Meeting

Meeting Date: 08/07/2012

Submitted For:	Robert Gould, Community Development Division Director	Submitted By:	Beverly Valenzuela, Executive Administrative Assistant, Community Development Division
Department:	Community Development Division	Division:	Community Development Administratio

Information

Request/Subject

Adoption of Resolution No. 12-08-01 Regarding P&Z Dept Case No. CUP-12-02--Stephanie Marr

Background Information

This area is an island within the City of Globe on East Ash Street and the City is opposed to the project (see attached letter from the City of Globe.) The applicant proposed to operate a swap meet on Fridays and Saturdays from 8:00 a.m. to 5:00 p.m. year round. The parcels being proposed for the swap meet include five parcels with a total of 1.7 acres (+-.) The area has historically been used by the current owner for the display of trailers for sale.

Evaluation

Current zoning regulations do not list swap meets or flea markets as permissible uses within any commercial district. In fact it is completely silent on this type of use. Due to this reason, it has been requested by the Community Development Division Director that the applicant obtain a Conditional Use Permit to establish this use based on the following section from current zoning regulations.

Gila County Zoning Ordinance - Section 103.11 Conditional Uses and Conditional Use Permits: A. General: As defined in Section 102, Conditional Uses are those uses which, although not specifically permitted in a given zoning district, would become harmonious or compatible with neighboring uses through the application and maintenance of qualifying conditions. Conditional Use Permits shall be issued setting forth all qualifying conditions subject to the procedures for rezoning found in Section 105 Amendment Procedures.

Gila County Zoning Ordinance - Section 104.2.H.-Commericial Two District: 4.a. reads "Indoor or outdoor sales or rental of new and used autos, trucks, boats, mobile homes, trailers, agricultural implements, lumber, lawn furniture, nursery stock and home gardening supplies and equipment; provided that no sales, rentals or displays are performed in the required front setback."

Staff has received two letters of opposition for this application.

Conclusion

Efforts need to be made to ensure this this area is under the jurisdiction of the Design Review Guidelines; while there are no permanent structures, there are guidelines for the site that will apply. The intent in developing the Design Review Guidelines was to ensure that development along this corridor enhanced the overall character of our main commerical activity center.

Recommendation

The Planning and Zoning Commission has unanimously recommended approval.

Suggested Motion

Public Hearing-Information/Discussion/Action to adopt Resolution No. 12-08-01, which approves Gila County Planning and Zoning Case No. CUP-12-02, an application submitted by Stephanie Marr requesting use of Gila County Assessor's tax parcel numbers 205-21-041 through -046 as a swap meet on Fridays and Saturdays from 8:00 a.m. to 5:00 p.m.
(Robert Gould)

Attachments

Public Hearing Notice

Staff Report

Resolution and Exhibit

Assessor's Parcel Map

Gerhardt opposition letter

City of Globe opposition letter

LEGAL NOTICE
GILA COUNTY
PLANNING & ZONING COMMISSION
AND
BOARD OF SUPERVISORS

NOTICE IS HEREBY GIVEN that the *Gila County Planning & Zoning Commission will hold a public hearing on July 19, 2012, and the Board of Supervisors* will hold a public hearing on August 7, 2012 concerning application CUP-12-02, filed by Stephanie Marr/property owner is John Angal. CUP-12-02 is a request to use Gila County Tax Assessor's Parcels 205-21-041, 042, 043, 044, 045 (zoned C2) and 046 (zoned C1) as a swap meet on Fridays and Saturdays from 8:00 am to 5:00 pm; property address is known as 1980 E. Ash Street, Globe, AZ.

The P & Z Commission hearing will be held at 10:00 a.m. in the Public Works Conference Room located at 745 N Rose Mofford Way, Globe, Arizona; video conferencing will be available in Payson at the Board of Supervisors Conference Room located at 610 E Highway 260. The Board of Supervisors hearing will be held at 10:00 a.m. in the Board of Supervisors Hearing Room, 1400 E. Ash Street, Globe, Arizona and will also be available by video conference from the Payson Conference Room.

The Board of Supervisors hearing date will be continued if the Planning & Zoning Commission has not given a recommendation. Citizens may file a statement in writing for or against the Conditional Use Permit request or appear and be heard at the dates set forth. Citizens can mail their statements to the addresses listed below.

Information regarding this application will be available for review in the Gila County Community Development Division offices, located at 745 N Rose Mofford Way in Globe, Arizona and at 608 E. Highway 260 in Payson, Arizona. Citizens may also call the offices at 928-402-8513 (Globe) or at 928-474-9276 (Payson), during normal business hours.

Planning and Zoning

By: Robert A. Gould, Community Development Director

Publications:	Arizona Silver Belt	One Publication:	July 3, 2012
	Payson Roundup	One Publication:	July 3, 2012

Staff Report
To the
Board of Supervisors

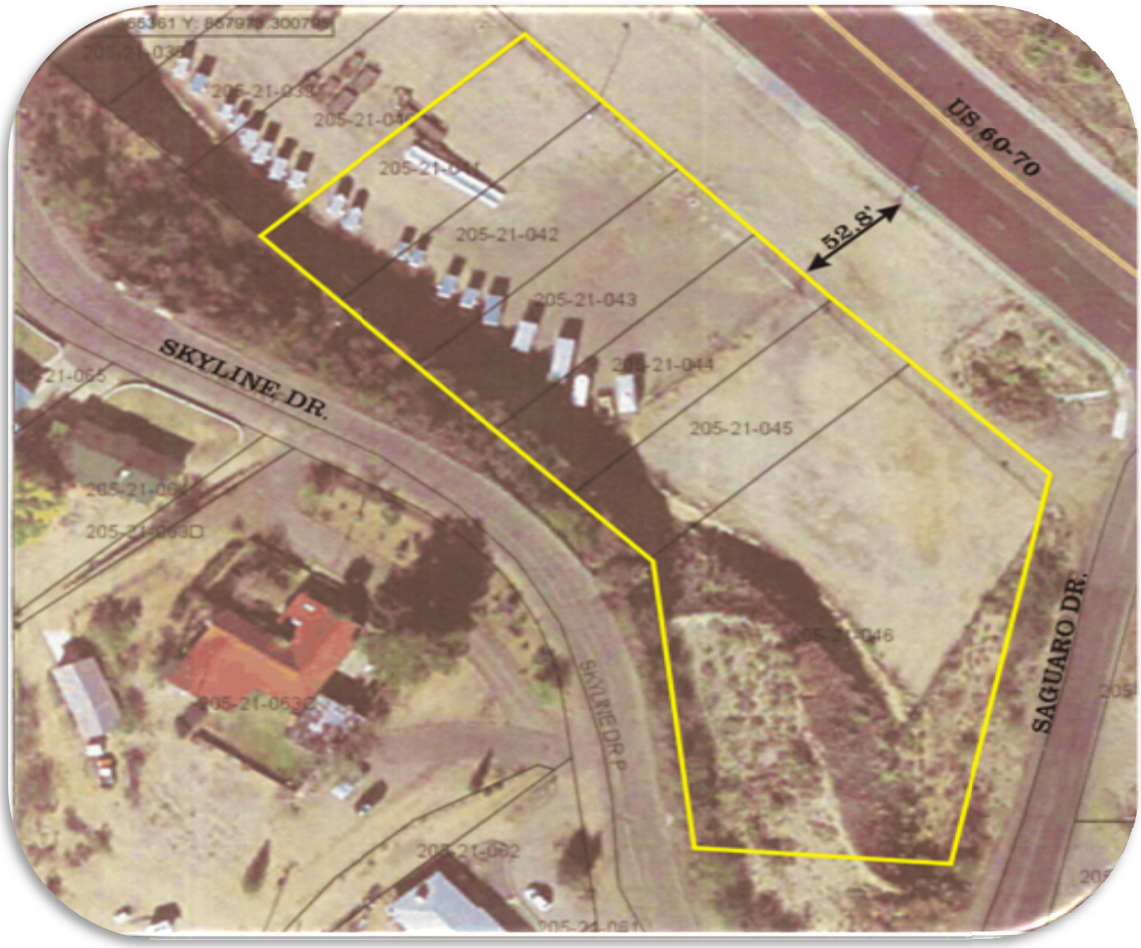

Conditional Use Permit Application
CUP-12-02

Meeting Date-August 7, 2012

I APPLICATION

Applicant Name	Stephanie Marr
Applicant Address	4750 Gold Strike Road
Site Address	1980 East Ash, Globe, AZ
APN Number	205-21-041 thru 046
Current Zoning	Parcels 41 thru 46 are zoned C2 and Parcel 46 is zoned C1
Current Comprehensive Plan Designation	Community Commercial: The Community Commercial category denotes the areas of the county where facilities that provide community and regional scale commercial services are preferred. Community Commercial development typically includes a grocery store and may contain numerous other support commercial services. Community Commercial facilities are typically located at the intersections of major roadways that carry regional and community-wide traffic. Community Commercial facilities shall be designed to be compatible with adjacent residential and nonresidential development and shall provide a common architectural theme for the center.
Application Number	CUP-12-02

II Purpose & Description

The applicant proposes to operate the Swap Meet on Fridays and Saturdays from the hours of 8:00 AM to 5:00 PM year round. The parcels being proposed for the Swap Meet include five parcels with a total of 1.7 acres. The area is a flat level area with no significant vegetation. The area has historically been used by the current owner for the display of trailers for sale.

III Zoning Regulations

Our current zoning regulations do not list Swap Meets or Flea Markets as permissible uses within any commercial district. In fact it is completely silent on this type of use. Due to this I have requested the applicant to obtain a Condition Use Permit to establish this use based on the following section from our current zoning regulations.

A. GENERAL:

As defined in Section 102, Conditional Uses are those uses which, although not specifically permitted in a given zoning district, would become harmonious or compatible with neighboring uses through the application and maintenance of qualifying conditions. Conditional Use Permits shall be issued setting forth all qualifying conditions subject to the procedures for rezoning found in Section 105 Amendment Procedures.

Under the C2 zoning district in the zoning ordinance there is a section for uses being established with a use permit. A use permit is an administrative tool allowing the Director to decide the appropriateness of the proposed use in the district. In this section it list indoor and outdoor sales or rental of various items. Staff opinion is that this list is too general to apply to a swap meet and therefore have chosen to utilize the Conditional Use Permit process. The following was extracted from our current Zoning Ordinance.

Uses Subject to Use Permits:

a. Indoor or outdoor sales or rental of new and used autos, trucks, boats, mobile homes, trailers, agricultural implements, lumber, lawn furniture, nursery stock and home gardening supplies and equipment; provided that no sales, rentals or displays are performed in the required front setback.

Another issue regarding zoning is related to a request by the property owner to recognize this use as a continuing nonconforming use as the property has historically been utilized for outdoor sales and display of trailers. After considering this request it is staff opinion that this use is very different from the use of selling trailers and would not constitute a continuation of a similar use and grandfathering rights should not apply to the establishment of a Swap Meet.

IV Primary issue or issues to consider

Parking:

There is an area fifty-two feet wide between the chain linked fence and the actual State Highway 60/70 pavement section. Just about all this area belongs to ADOT right of way. It is unpaved. This would be ample room for one row of parking with room to provide forward movement of the vehicle to both ingress and egress the property. There would be no need to back out onto the State Highway. There are two curb cuts along State Highway 60/70 that provide ingress and egress to the parking area.

Parking Area

Design Review Regulations:

This project is within the area designated for the Design Review Guidelines. While no structures are proposed the area of the Guidelines designated for site planning would apply. The applicable guidelines are listed in Attachment "A" of this report

Waste Disposal:

The applicant proposes to provide two Port-a-potties on the site.

Port-a-Potty

Solid Waste Disposal:

There is no proposal for dealing with solid waste. The property owner has included in the rules that all vendors pack out their waste materials. This does not work well for the customers on the site therefore some arrangements will need to be required for waste containers and maintenance of these containers.

Adjoining Properties:

1. North: Hwy 60 and Circle K and UPS business (Within City of Globe)

2. South: Skyline Drive and single family residential development
   Zoning designation R1-D8 (Within the City of Globe)

3. East: Undeveloped and Church Property within the City of Globe

4. West: C2 zoned property (Trailer Sales & Pawn Shop) within unincorporated area of the Gila County

Buffering:

There is a significant cliff face to south that rises approximately 35 feet with Skyline Drive on the other side and residential development across the street. There is no buffering provided other than the cliff face. The fencing is chain linked with barbed wire across the top. There is a requirement that the use provide an opaque fence in our current zoning regulations

Current Fencing

Landscaping:

No landscaping is proposed

Signage:

No signage plan is submitted. Below is the current signage on the property.

Current Signage

V Background

The SWAP Meet has historically operated on Highway 60/70 to the west of this location within the City of Globe. Due to a Hotel being proposed for that site the SWAP Meet was required to relocate to another site. Parcels 205-21-041 thru 046 have been used for outdoor sales of Manufactured homes and Trailers for approximately 20 years according to the applicant.

VI Analysis

Swap meets are an important part of our economy. They provide a means of income for low income families and usually do not have significant impacts on community commercial. It is very important that vendors at a swap meet follow all tax laws that are applicable to them.

This area is an island within the City of Globe. A copy of this report will be sent to the City for their input.

This Swap Meet is proposed to operate Friday thru Sunday for each weekend throughout the year. The unpaved parking could create dust conditions for neighboring properties. All of the parking is within ADOT rights-of-way. The applicant has been told to request approval from them to utilize this area for their business.

This area is also under the jurisdiction of the Design Review Guidelines. While there are no permanent structures there are guidelines for the site that will apply to this project. A list of those guidelines is attached to this report in Attachment "A". I'm not sure it is feasible to address those guidelines and still have a swap meet at this location.

There are two port-a-potties on site for use by the vendors and customers. With no permanent structures being utilized on the site the port-a-potties should be adequate

The fencing does not meet the regulations requiring an opaque fence and I also believe it will be an issue with the Design Review Board. Landscaping and signage should also be addressed by the Design Review Board.

Buffering could be an issue. The high embankment between this project and the residential area is more than sufficient for visual buffering, but we also need to be careful about lighting and noise issues. All lighting on this site should be shielded in accordance with our dark sky ordinance. Limiting activities to day time hours should mitigate noise problems as well as lighting.

VII Summary

Efforts need to be made to ensure this proposed use is compatible with nearby residential property and that it fits within the overall plan for development of properties along the Highway 60/70 corridor. The intent in developing the Design Review Guidelines was to ensure that development along this corridor enhanced the overall character of our main commercial activity center.

VIII Recommendation

The Planning and Zoning Commission held a public hearing on July 19th, 2012 and unanimously recommended approval to the Board of Supervisors.

Staff has included two recommendations in this section one to approve and one to not approve this activity.

Motion to approve:

I move to approve the proposal to establish a Swap Meet with the following conditions:

1. That the applicant must submit for approval of site planning guidelines to the Design Review Board.
2. That all lighting on this site must be shielded
3. That the applicant shall provide to the County approval of use of parking area from ADOT.
4. The applicant shall provide trash receptacles on site for use by both vendors and customers and maintain those receptacles.
5. The applicant shall ensure that all vendors are properly registered with ADOR.

I move to deny the CUP 12 02 application due to the fact that it is not compatible with the intent and purpose of our Design Review Program to help beautify the Highway 60/70 Corridor.

IX Attachments

Attachment "A" Applicable Design Review Guidelines
Attachment "B" Area Map

Attachment "A"
Applicable Design Review Guidelines

1. Pedestrian and Vehicular Circulation

   a. Circulation patterns should be obvious and simple. All likely pedestrian routes should be considered in the design phase to eliminate "short cuts" that damage landscaped areas.
   b. Circulation systems should limit conflicts between vehicular, bicycle and pedestrian Traffic.
   c. Where pedestrian routes cross vehicular traffic paths; a change in grade; materials; textures and/or colors should be provided.
   d. Pedestrian routes/paths should be provided to the front entrance of a building from the public right of way.
   e. Bicycle parking facilities may be substituted for automobile parking spaces required at a ratio of five (5) bicycle spaces for one required vehicle parking space. A maximum of 5% of the total required parking spaces may be reduced from the total number of parking spaces required under the established Parking spaces related requirements in the government agency's standards. Bicycle parking facilities should include provisions for locking of the bicycle in a secure rack.

2. Parking Facilities

   Parking should not be positioned between the public sidewalk and the front of the building, where feasible. Parking at the side of the property must be landscaped and screened

3. Driveways

   a. Shared or common driveways are encouraged.
   b. There should be a maximum of one driveway per lot or parcel except where the lot has more than one hundred (100) feet of frontage on the Highway Corridor. Driveways should be separated by a minimum of 100 feet. Approval of the Arizona Department of Transportation must be obtained in each case. The State's jurisdiction and decision shall always prevail if different than the recommendation of the Design Review Committee.

4. Signage

   a. No roof sign should be permitted except where significant negative grade change exists from the roadway to the building site.
   b. Portable freestanding signs must not exceed three (3) feet in height, six (6) square feet

c. On each face, and must not obstruct pedestrian ways or cause line of sight problems. Permanent freestanding signs should not exceed thirty-two (32) square feet on each face and must be low profile.
d. Marquee signs must not be installed in such a manner that the illumination from the sign causes distraction or hindrance to vehicles on the corridor nor occupants of nearby properties.
e. Colors should be used from the approved color board.
f. Signs must be properly maintained.
g. Signs should be architecturally integrated with their surroundings in terms of size, shape, color, texture and lighting.
h. Signs should not be in visual competition with each other.
i. In the event that these signage guidelines are found to be in conflict with the adopted sign code provisions of the government agency with jurisdiction, the established governmental sign code requirements shall have precedence.

5. <u>Lighting</u>

a. Colored lighting is allowed but should not:

i. spill over onto adjacent properties,
ii. be the primary lighting theme,
iii. contain moving or streaming lights or components

b. Lighting fixtures should be historically appropriate to the area, close in appearance to other installed historic lighting within the government jurisdiction.

6. <u>Utility Equipment</u>

a. Mechanical systems equipment should be screened and sound attenuated, using approved building materials and positioned to maintain minimum intrusion on the public view.
b. Utility areas and equipment, such as trash receptacles, storage areas, service yards, loading/unloading areas should be screened from public view with approved building materials.
c. Permanently installed utility standards and communication equipment should blend into the surrounding environment. The use of earth colors and/or the installation of faux foliage, and/or the installation of equipment constructed to replicate a living plant, such as a palm tree, cactus, or other tree as appropriate to blend the equipment into the environment should be considered

7. <u>Landscaping</u>

a. Landscaping should soften the visual appearance of the site, and provide a pedestrian friendly environment.
b. Any planting within the rights of way should not create a line of sight nuisance, or be a nuisance to pedestrian and vehicular traffic in any way.
c. All undeveloped areas, within public view, should be landscaped or left with undisturbed natural vegetation

i. Deciduous or evergreen shrubs and trees can be used.
ii. Planter boxes are encouraged for flowers.

8. Hardscape

   a. Colors, textures and materials selected for walkways, patios, and other ground plane enhancements must support the architectural character of the area.
   b. Materials should not impede accessibility to those who are physically challenged
   c. The texture and color of hardscape should clearly differentiate between driveways, parking facilities, and those areas used by bicyclists or pedestrians.
   d. Stone, brick, colored concrete, pavers, covered boardwalks, and concrete finishes are acceptable.
   e. Natural materials should be used to the maximum extent; Synthetic materials may be considered.

9. Fences and Walls

   When adding fences and walls, the building materials should comply with the approved building materials in this guideline

10. Overhead Protection Structures

    a. Overhead protection structures should be installed on the façade of the ground floor above any installed or planned pedestrian pathways.
    b. A minimum of seven (7) foot vertical clearance is required for overhead structures above potential pedestrian pathways.

RESOLUTION NO. 12-08-01

A RESOLUTION OF THE BOARD OF SUPERVISORS OF GILA COUNTY, ARIZONA,
APPROVING GILA COUNTY PLANNING AND ZONING DEPARTMENT
CASE NO. CUP-12-02, A REQUEST BY STEPHANIE MARR FOR A CONDITIONAL USE PERMIT ON
GILA COUNTY ASSESSOR'S TAX PARCELS NO. 205-21-041, 042, 043, 044, 045 & 046
LOCATED AT 1980 E. ASH STREET IN GLOBE, AZ.

WHEREAS, the Gila County Planning and Zoning Commission, at a duly noticed public hearing held on July 19, 2012, has recommended to the Board of Supervisors of Gila County, Arizona, that a Conditional Use Permit request, set forth in the attached Exhibit "A", be adopted as provided in Section 11-829, Arizona Revised Statutes; and

WHEREAS, after holding a public hearing as provided by law, the Board of Supervisors of Gila County, Arizona, is of the opinion that the adoption of such recommendation would be in the best interest of Gila County.

NOW, THEREFORE, BE IT RESOLVED that the Gila County Board of Supervisors, at a regularly scheduled and duly noticed public hearing did pass and adopt Gila County Planning and Zoning Department Case No. CUP-12-02, as set forth in the attached Exhibit "A" and that said zoning request become effective immediately.

PASSED AND ADOPTED this 7th day of August 2012, at Globe, Gila County, Arizona.

Attest:

GILA COUNTY BOARD OF SUPERVISORS

_____

Marian Sheppard
Chief Deputy Clerk

_____

Tommie C. Martin, Chairman

Approved as to form:

_____

Bryan Chambers
Chief Deputy County Attorney

EXHIBIT "A" to Resolution No. 12-08-01
CONDITIONAL USE PERMIT
PLANNING AND ZONING CASE NO. CUP-12-02
for Stephanie Marr
1980 East Ash St, Globe, AZ.
Gila County Tax Assessor's Parcel 205-21-041 thru 046

Conditional Use Permit to allow property to be used as a Swap Meet on Fridays and Saturdays from the hours of 8:00 AM to 5:00 PM year round. The parcels include five parcels with at total of 1.7 acres (+-) and Gila County Tax Assessor's Parcels 205-21-041 thru 45 (zoned C2) and 205-21-046 (zoned C1).

The following conditions shall apply; violation of any of these conditions may constitute the conditional use permit to be revoked:

1. The applicant must submit for approval of site planning guidelines to the Design Review Board

2. All lighting on this site must be shielded

3. The applicant shall provide to the County approval of use of parking are from ADOT

4. Applicant shall provide trash receptacles on site for use by both vendors and customers and maintain those receptacles.

5. Applicant shall ensure that all vendors are properly registered with ADOR.

PT SECTION 34
T1N R15 1/2E

205-21
2 of 2
CODE 0101
0150
UPDATED 12-15-11

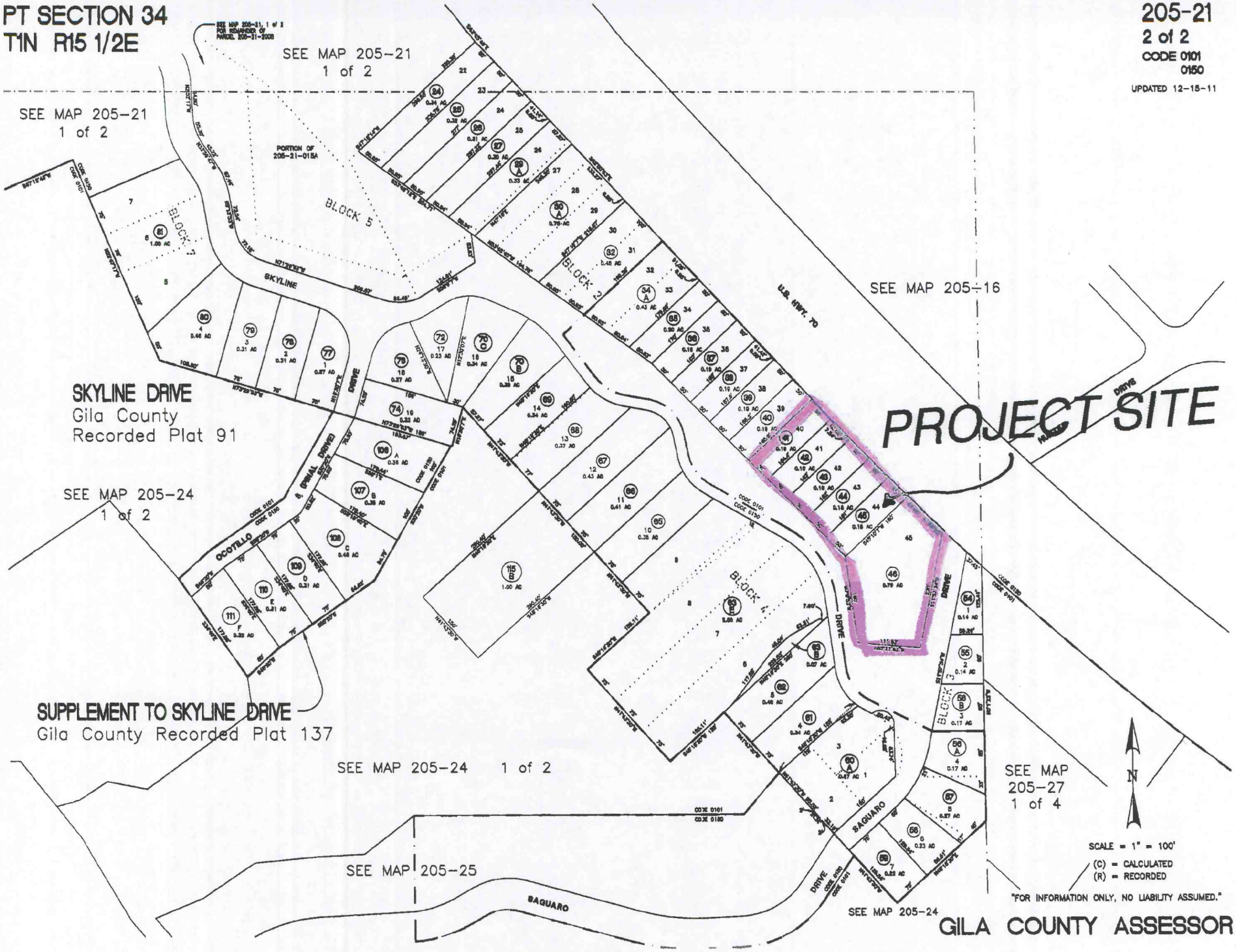

Mr. and Mrs. Ralph A. Gerhardt
1250 East Skyline Drive
Globe, Arizona 85501
(928) 425-5819

June 16, 2012

Gila County Planning and Zoning Commission
Chairman and Commission Members
Gila County Courthouse
1400 East Ash Street
Globe, Arizona 85501

Dear Chairman and Commission Members:

We have been notified of the application for the Conditional Use Permit for the proposed Swap Meet in the County Island within the City of Globe.

In the recommendation from Gila County staff, there are two proposed recommendations, one to approve, and another to deny the Conditional Use Permit. We recommend that the application for CUP 12 02 be denied, as it does not follow the Design Review Guidelines that Gila County, the City of Globe, and the Town of Miami have adopted through an Intergovernmental Agreement.

We understand the need for a property where people or legal entities are able to buy, sell, or exchange products as a means of commerce, but the property identified in CUP 12 02 is located next to our primary place of residence; the value of which could be negatively impacted as a result of locating a Swap Meet in close proximity thereto. Furthermore, the applicant has not provided proof of adequate parking for the property, and there are several issues of concern that were identified by the Gila County Community Development Director. Perhaps an alternative site would better suit the needs of the community. Alternative locations that are not adjacent to an established residential neighborhood should be looked at. An area like the former Mountain View Mobile Home Park would have all the parking and other needs and not be in conflict with regional Design and Review Guidelines.

Sincerely,

Ralph A. Gerhardt
Residential Property Owner
Ralph A. Gerhardt

Donna J. Gerhardt
Residential Property Owner
Donna J. Gerhardt

1907 - 2007

City of Globe

150 N. Pine Street
Globe, Arizona 85501

June 7, 2012

Gila County Planning and Zoning Commission
Chairman & Commission Members
Gila County Court House
1400 East Ash Street
Globe, Arizona 85501

Dear Chairman and Commission Members,

The City of Globe has been notified of the application for the Conditional Use Permit for the proposed Swap Meet in the County Island within the City of Globe.

In the recommendations from County staff, there are two recommendations, one to approve, and the other to deny the CUP. The City of Globe would also like to recommend that the application for CUP 12 02 be denied, as it does not follow the Design Review Guidelines that Gila County, City of Globe, and Town Of Miami are in an Intergovernmental Agreement concerning.

The City of Globe understands the need for a property where people are able to sell products to make money, but this proposed property is next to a City residential area, does not have parking for the property, and all other issues detailed by the Community Development Director. Maybe an alternative site would be the better way to go. An alternative that has been suggested to me has been to approach the Apache Gold Casino to see if the swap meet could be placed in their pavilion on non-event weekends. An area like the Casino Pavilion would have all the parking and other needs and not be in conflict with the guidelines of Design Review.

Sincerely,

Chris Collopy
Planning and Zoning Administrator

ARF-1326 **Public Hearing 2- B**

Regular BOS Meeting

Meeting Date: 08/07/2012

Submitted For:	Robert Gould, Community Development Division Director	Submitted By:	Beverly Valenzuela, Executive Administrative Assistant, Community Development Division
Department:	Community Development Division	Division:	Community Development Administratio

Information

Request/Subject

Adoption of Resolution No. 12-08-02 Re: P&Z Dept Case No. CUP-12-01

Background Information

The property is located on Highway 87 in Rye and it is zoned C-3. In the past it has been used for sales of used items and for RV repair. Surrounding properties are zoned C-3 and the rear of the property is adjacent to Forest Service land.

Evaluation

The applicant is proposing to use the north portion of this property for dismantling automobiles and sales of the parts. The applicant is in the process of getting the required approvals from the state and/or other agencies. The public will come to the office and only the employees will have access to the area where the parts are stored. Storage will be in racks/shelves outside.

Conclusion

The proposed use of dismantling and recycling automobiles will be compatible with the surrounding uses, if the following conditions are met:

1. Addition of any electrical, mechanical, structures, signs, etc will require permits. Building permits shall be obtained and the applicable structures for the dismantling and storage business shall be inspected and approved by the Building Safety Department.

2. All required county, state and/or federal licenses/permits shall be obtained and copies shall be provided to Gila County Community Development. It is the business owner's responsibility to research the necessary licenses/permits that are required.

3. Outside lighting must comply with the Gila County Outdoor Lighting Ordinance, and must be hooded or shielded so as to deflect light away from the right-of-way.

4. Opaque fencing approved by staff shall be installed to screen the business from Highway 87.

5. Violations of any of the previous conditions shall be grounds for suspension or revocation of this Conditional Use Permit.

6. This Conditional Use Permit will be reviewed for compliance every 5 years. If there are no violations, it will be automatically renewed.

Recommendation

The Planning and Zoning Commision has recommended approval with the conditions listed.

Suggested Motion

Public Hearing-Information/Discussion/Action to adopt Resolution No. 12-08-02, which approves Gila County Planning and Zoning Case No. CUP-12-01, an application submitted by David Stoghill, agent for owner, Donald Garvin, requesting to operate a vehicle dismantling and metal recycling business on Gila County Assessor's tax parcel number 304-32-003A.
(Robert Gould)

Attachments

Public Hearing Notice

Staff Report

Resolution No. 12-08-02 and Exhibit

LEGAL NOTICE
GILA COUNTY
PLANNING & ZONING COMMISSION
AND
BOARD OF SUPERVISORS

NOTICE IS HEREBY GIVEN that the Board of Supervisors will hold a public hearing on **August 7, 2012** concerning application CUP-12-01, filed by David Stodghill, agent for owner, Donald Garvin. CUP-12-01 is a request to operate a vehicle dismantling and metal recycling business. The subject property address is **16317 N. Highway 87 in Rye,** and the parcel number is **304-32-003A**.

The P & Z Commission hearing will be held at 10:00 a.m. in the Public Works Conference Room located at 745 N Rose Mofford Way, Globe, Arizona; video conferencing will be available in Payson at the Board of Supervisors Conference Room located at 610 E Highway 260. The Board of Supervisors hearing will be held at 10:00 a.m. in the Board of Supervisors Hearing Room, 1400 E. Ash Street, Globe, Arizona and will also be available by video conference from the Payson Conference Room.

The Board of Supervisors hearing date will be continued if the Planning & Zoning Commission has not given a recommendation. Citizens may file a statement in writing for or against the Conditional Use Permit request or appear and be heard at the dates set forth. Citizens can mail their statements to the addresses listed below.

Information regarding Application CUP-12-01 will be available for review in the Gila County Community Development Division offices, located at 745 N Rose Mofford Way in Globe, Arizona and at 608 E. Highway 260 in Payson, Arizona. Citizens may also call the offices at 928-402-8513 (Globe) or at 928-474-9276 (Payson), during normal business hours.

Planning and Zoning

By: _____
Robert A. Gould, Community Development Director

Publications:	Arizona Silver Belt	One Publication: July 3, 2012
	Payson Roundup	One Publication: July 3, 2012

Staff Report

to the

Board of Supervisors

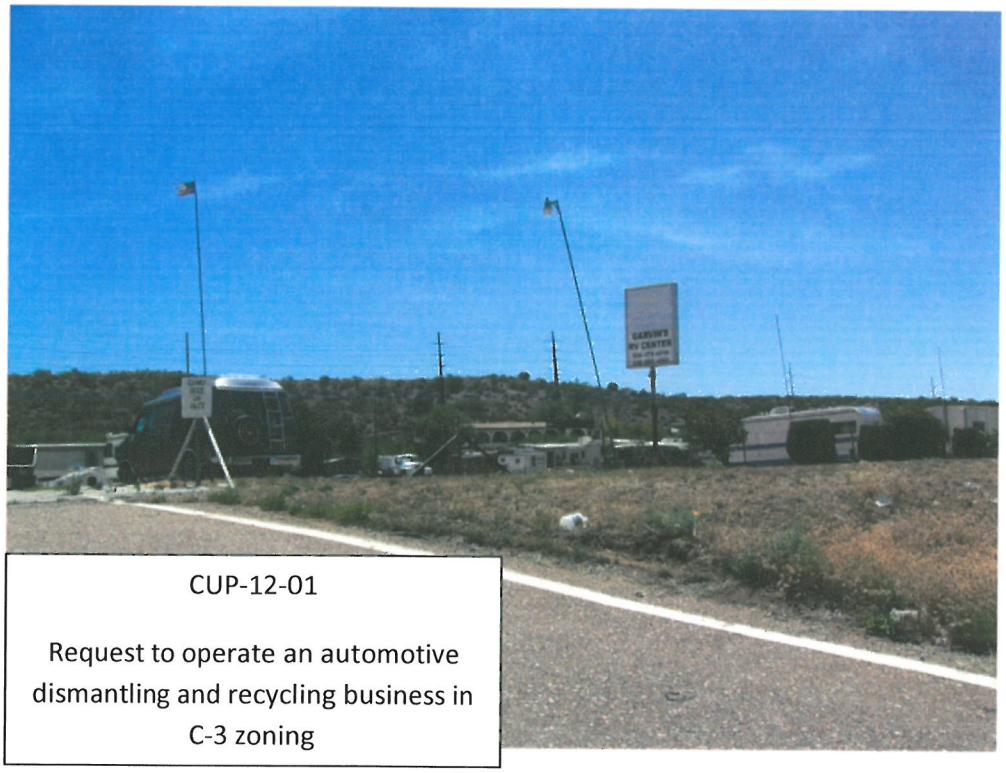

CUP-12-01

Request to operate an automotive dismantling and recycling business in C-3 zoning

July 23, 2012

I APPLICATION

Applicant Name	David Stodghill
Applicant Address	PO Box 781, Pine, AZ 85544
Site Address	16317 N AZ Highway 87, Rye
APN Number	304-32-003A
Current Zoning Designation	C-3
Current Comprehensive Plan Designation	Commercial
Application Number	CUP-12-01

II PURPOSE & DESCRIPTION

The applicant is requesting a Conditional Use Permit to operate an automotive dismantling and recycling (selling the used parts) business on this property. The property has previously been used for sales of used items.

The hours of operation of the dismantling business will be Monday through Saturday, 8am to 6pm; it will be closed on Sundays. There will be 2 full-time employees on site, plus the business owner, who will be out collecting vehicles. The general public will only come to the office. Dismantling will be done outside under a metal awning with a concrete slab, and EPA-approved concrete containment units will be used to hold the liquids recovered from the vehicles. The vehicle parts will be stored on racks outside.

The sale of used vehicle parts qualifies as junk according to the definition in the zoning ordinance; however, because there is no residential district within 300' of the property, no opaque fence is required.

III PRIMARY ISSUE OR ISSUES TO CONSIDER

Zoning requirements for Conditional Uses and Conditional Use Permits are provided in Section 103.11 of the zoning ordinance. C3 permit requirements are in Section 104.2, Item I. See the following excerpts:

Section 104.2 USE DISTRICTS (GENERAL)

I. C3 -- COMMERCIAL THREE DISTRICT (Central Commercial District)

1. **Intent and Purpose:** To provide a district wherein a full range of sales, services, and office uses are permitted, and wherein the density of traffic and building area are not conducive to residential development.
2. **District Stipulations and Provisions:** (supplemental to and/or supplanting the "General Stipulations and Provisions", Section 103):

   a. There shall be a six (6) foot high opaque wall, fence, or approved landscape screen adjacent to any residential district.

b. All outdoor lighting shall be hooded or shielded so as to deflect light away from any residential district or public right-or-way within two hundred (200) feet of said lighting.
c. No use shall be operated in such a manner as to be an explosion or fire hazard, nor shall there be emitted into the atmosphere any smoke, soot, dust, radiation, odor, noise, vibration, heat, glare, or toxic fumes to such an extent as to constitute a nuisance.
d. Sales of junk, as defined in Section 102 of this Ordinance, shall not be conducted within three hundred (300) feet of any residential district; further, such sales shall be conducted within a fully enclosed building or within an area shielded by a six (6) foot high opaque wall, fence, or approved landscape screen.

5. **Uses Permitted Subject to a Conditional Use Permit:**
a. Facilities for the dismantling of automobiles and sale of used auto parts, with the further stipulation that such activity shall not be permitted within three hundred (300) feet of any residential district.
b. Sales of liquid petroleum gas, with the further provision that no above-ground storage tank in excess of one hundred (100) gallon capacity may be located within three hundred (300) feet of any residential district, hospital, school, or public facility.

Section 102 DEFINITIONS

JUNK: Any scrap, waste, reclaimable material, or debris, whether or not stored or used in conjunction with dismantling, processing, salvage, storage, baling, disposal, or other use or disposition, including but not limited to inoperable and unregistered motor vehicles, tires, vehicle parts, equipment, paper, rags, metal, glass, building materials, household appliances, brush, wood and lumber.

IV BACKGROUND

The property is located at 16317 N Highway 87 in Rye, and is zoned C3. There are several existing buildings on the property, including a manufactured home, an office and a large steel building. This business will not currently be housed in the steel building; instead, the public will come to the office and employees will access the vehicle parts stored outside.

V ANALYSIS

Site is accessed off of Highway 87 in Rye; frontage of the lot is bordered by property belonging to ADOT. Properties to the north and south of this parcel are zoned C-3. The property to the east is Forest Service land. Because of the size of this parcel as well as neighboring properties, there are only three neighbors within the 300'notification area.
The property is level and has all utilities already on site.

VI SUMMARY

Staff opinion is that the addition of automobile dismantling and the sale of used parts, with certain conditions, will be an appropriate use in the Rye area where the property is located, and will be compatible with surrounding uses.

VII RECOMMENDATION

Staff supports that the Planning and Zoning Commission recommend to the Board of Supervisors approval of application CUP-12-01 subject to the following conditions:

1. Addition of any electrical, mechanical, structures, signs etc. will require permits. Building permits shall be obtained and the applicable structures for the dismantling and storage business shall be inspected and approved by the Building Safety Department.

2. All required county, state and/or federal licenses/permits shall be obtained and copies shall be provided to Gila County Community Development. It is the business owner's responsibility to research what licenses/permits are required.

3. Outside lighting must comply with the Gila County Outdoor Lighting Ordinance, and must be hooded or shielded so as to deflect light away from the right of way.

4. Opaque fencing, approved by the Community Development Director, shall be installed to screen the business from Highway 87 and the Right-of-Way.

5. Violations of any of the previous conditions shall be grounds for suspension or revocation of this Conditional Use Permit.

6. This Conditional Use Permit will be reviewed for compliance every 5 years. If there are no violations, it will be automatically renewed.

VIII ATTACHMENTS

Attachment "A"	Zoning Map
Attachment "B"	Comprehensive Plan Map
Attachment "C"	Submitted comments

SW 1/4 SECTION 20
T9N R10E

304-32
CODE 1000
UPDATED 5-5-10

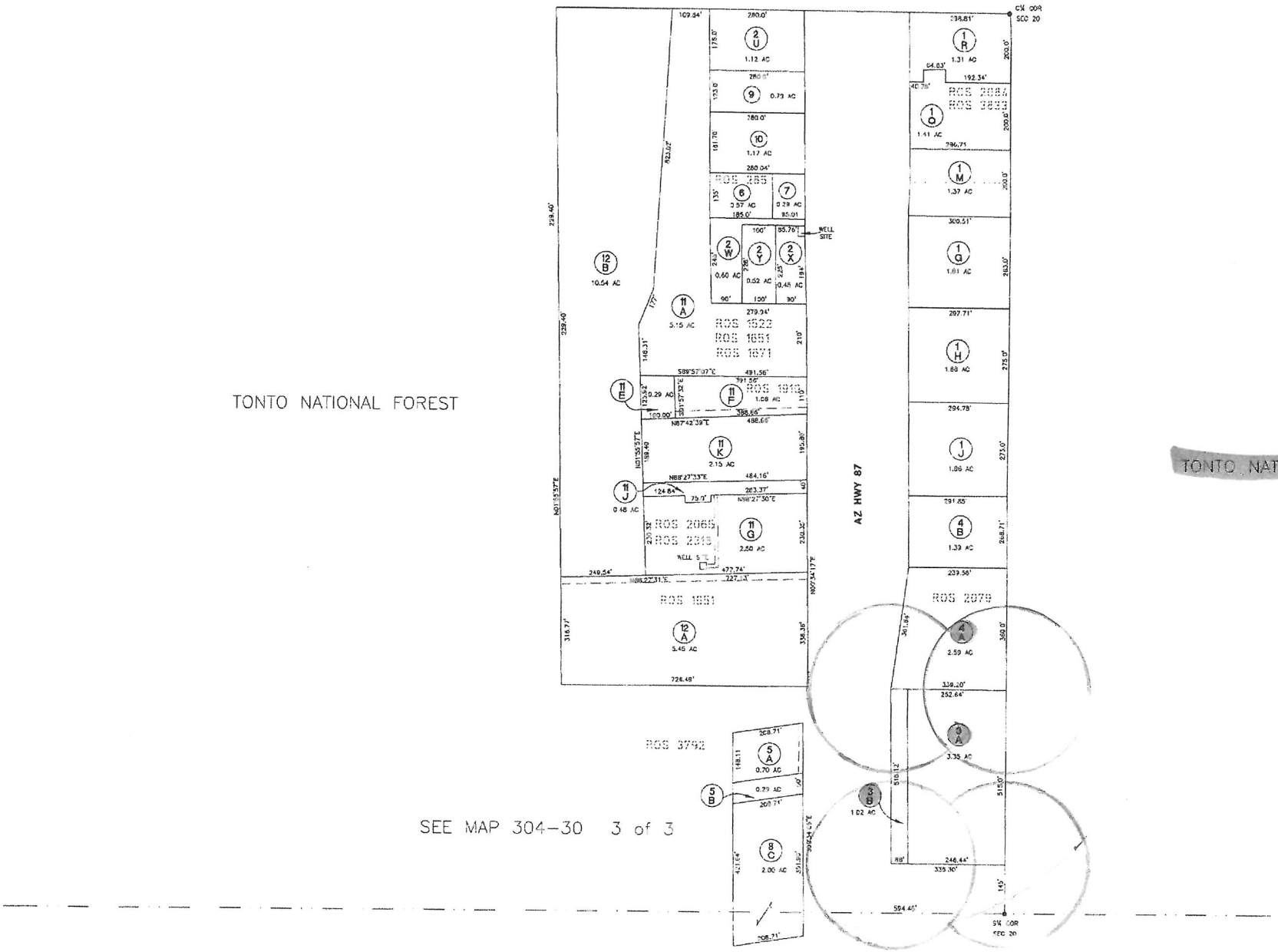

SCALE = 1" = 200'

(C) = CALCULATED
(R) = RECORDED

"FOR INFORMATION ONLY, NO LIABILITY ASSUMED."

GILA COUNTY ASSESSOR

DESCRIBE PROPOSED PROPERTY USE:

Automotive Dismantling & Recycling – Miscellaneous Metal & Other Recyclables

Modern auto recycling is a tightly coordinated and comprehensive process. The process of auto recycling requires the use of the following tools and equipment:

- Forklift for Unloading and Loading of Vehicles
- Mechanics Hand Tools
- Air Compressors and Air Tools
- Floor Jacks and Engine/Transmission Hoists

The first step, after a vehicle arrives at our facility is to confirm its ownership!

In our automotive recycling business, inoperative motor vehicles will be brought into our facility where the hazardous and recyclable fluids will be properly drained and stored in EPA approved storage containers. Motor vehicle fluids are drained separately over an impervious surface and put into leak-proof containers to safely store for pickup by a certified off-site fluid recycler.

Automotive batteries also are removed during the vehicle prep stage. Depending on the condition, batteries are made available for resale or collected for shipment to an off-site recycler.

Items with scrap value such as catalytic converters are removed for immediate recycling.

Next the engine and transmission is lifted from the chassis and reusable undamaged other miscellaneous vehicle parts removed, cleaned, tested, inventoried, and stored in a warehouse until sold to auto repair garages, auto body shops, and individuals.

The remaining vehicle hulk is then prepared for scrapping.

Automotive recyclers are a valuable source for economical and often hard to find used motor vehicle replacement parts. Professional auto recyclers use computer and satellite communication systems that enable for direct inventory assessment as well as locate parts across town or across the continent, by simply entering the appropriate data into their computer system. This technology allows recyclers to maximize their inventories and provide quick and efficient service to their customers.

This recycling process recovers 75 percent of the vehicle by weight, which is a greater percentage than any other type of recycling process. (Even aluminum can recycling, the next most efficient item, recovers only 61%.) Automotive recycling is the 16th largest industry in the United States, estimated to be a $25 billion per year industry. Recycling autos provides enough steel to produce almost 13 million new automobiles, while generating jobs for 46,000 people.

Submitted by applicant,
David Stodghill

RESOLUTION NO. 12-08-02

A RESOLUTION OF THE BOARD OF SUPERVISORS OF GILA COUNTY, ARIZONA, APPROVING GILA COUNTY PLANNING AND ZONING DEPARTMENT CASE NO. CUP-12-01, A REQUEST BY DAVID STODGHILL FOR A CONDITIONAL USE PERMIT ON GILA COUNTY ASSESSOR'S TAX PARCEL NO. 304-32-003A LOCATED AT 16317 N. HIGHWAY 87 IN RYE, ARIZONA.

WHEREAS, the Gila County Planning and Zoning Commission, at a duly noticed public hearing held on June 21, 2012, has recommended to the Board of Supervisors of Gila County, Arizona, that a Conditional Use Permit request, set forth in the attached Exhibit "A", be adopted as provided in Section 11-829, Arizona Revised Statutes; and

WHEREAS, after holding a public hearing as provided by law, the Board of Supervisors of Gila County, Arizona, is of the opinion that the adoption of such recommendation would be in the best interest of Gila County;

NOW, THEREFORE, BE IT RESOLVED that the Gila County Board of Supervisors, at a regularly scheduled and duly noticed public hearing did pass and adopt Gila County Planning and Zoning Department Case No. CUP-12-01, as set forth in the attached Exhibit "A" and that said zoning request become effective September 6, 2012.

PASSED AND ADOPTED this 7th day of August 2012, at Globe, Gila County, Arizona

Attest: **GILA COUNTY BOARD OF SUPERVISORS**

_____ _____

Marian Sheppard
Chief Deputy Clerk of the Board

Tommie C. Martin, Chairman

Approved as to form:

_____

Bryan Chambers
Chief Deputy County Attorney

EXHIBIT "A" to Resolution No. 12-08-02
CONDITIONAL USE PERMIT
PLANNING AND ZONING CASE NO. CUP-12-01 FOR
David Stodghill
16317 N. Highway 87, Rye, AZ
Gila County Assessor's Tax Parcel Numbers 304-32-003A

The Gila County Board of Supervisors has approved a Conditional Use Permit to operate a vehicle dismantling and metal recycling business with the following conditions:

1. Addition of any electrical, mechanical, structures, signs, etc will require permits. Building permits shall be obtained and the applicable structures for the dismantling and storage business shall be inspected and approved by the Building Safety Department.

2. All required county, state and/or federal licenses/permits shall be obtained and copies shall be provided to Gila County Community Development. It is the business owner's responsibility to research what licenses/permits are required.

3. Outside lighting must comply with the Gila County Outdoor Lighting Ordinance, and must be hooded or shielded so as to deflect light away from the right-of-way.

4. Opaque fencing approved by staff shall be installed to screen the business from Highway 87.

5. Violations of any of the previous conditions shall be grounds for suspension or revocation of this Conditional Use Permit.

6. This Conditional Use Permit will be reviewed for compliance every 5 years. If there are no violations, it will be automatically renewed.

ARF-1390 **Regular Agenda Item 3- A**

Regular BOS Meeting

Meeting Date: 08/07/2012

Submitted For: Daisy Flores, County Attorney

Submitted By: Liz Fetterman, Victim Witness Advocate, County Attorney

Department: County Attorney

Information

Request/Subject

Adoption of Proclamation 12-06 Proclaiming August 1-31, 2012, As Child Support Awareness Month in Gila County

Background Information

Since 1995, the United States has been honoring Child Support Awareness Month during the month of August. Former President Bill Clinton recognized this month on August 5, 1995, in his official proclamation stating that, "Providing for our children is one of humanity's worthiest and most fundamental endeavors. Children are the best part of ourselves - the sum of our past and the promise of our future, the guarantee that our lives and values and dreams will flourish long after we are gone."

Evaluation

Child support services are available to any parent, guardian, or caretaker of a child for whom child support is needed, regardless of income. Upon applying for child support services, Gila County Child Support Enforcement will assist them in locating noncustodial parents; establishing legal paternity for children born to unmarried parents; obtaining a support order for financial support and medical insurance coverage for the child; collecting child support payments; and providing enforcement services when noncustodial parents fail to pay their child support.

Child Support helps families stay self-sufficient so that they do not rely on public assistance programs. Studies have shown that children who received financial support from both parents tend to get better grades in school and also tend to have fewer behavioral problems throughout their childhood, teen years and adult lives. Child Support Awareness Month is a time to salute parents who work hard to ensure their children grow up in stable homes and look forward to a bright future.

Conclusion

The Gila County Attorney's Office, Child Support Division, recognizes the importance of designating a time devoted to increase the general public's awareness and support of agencies providing services to child support clients. By adopting Proclamation No. 12-06 , the Child Support Division of Gila County hopes to shed light on the local, community ,and state support system that provides economic security to families and children. The Department of Economic Security Division of Child Support Enforcement, the Office of the Attorney General, county attorneys, state and local clerks of court, and child support enforcement agencies are just some of the state support systems that are being recognized through the proclamation.

Recommendation

It is recommended that Gila County Board of Supervisors issue and adopt Proclamation No. 12-06 proclaiming August 1-31, 2012, as Child Support Awareness Month.

Suggested Motion

Information/Discussion/Action to adopt Proclamation No. 12-06 proclaiming August 1-31, 2012, as Child Support Awareness Month in Gila County.
(Jeff Dalton)

Attachments

2012 Child Support Awareness Proclamation No. 12-06

Governor's Proclamation

PROCLAMATION NO. 12-06

A PROCLAMATION OF THE BOARD OF SUPERVISORS OF GILA COUNTY, ARIZONA, PROCLAIMING AUGUST 1-31, 2012, AS CHILD SUPPORT AWARENESS MONTH IN GILA COUNTY.

WHEREAS, Janice K. Brewer, Governor of the State of Arizona has proclaimed August 1-31, 2012 as CHILD SUPPORT AWARENESS MONTH; and

WHEREAS, children need responsible parents who are engaged at every stage of their child's development; and

WHEREAS, to be engaged, both parents must be involved in providing for a child's emotional and financial needs, and encourage their interests; and

WHEREAS, Arizona's Centennial reminds us that the State of Arizona was built on family values, including parent engagement; and

WHEREAS, a parent can be actively and successfully engaged with their children regardless of marital status; and

WHEREAS, the Arizona Department of Economic Security, Arizona Attorney General's Office, Administrative Offices of the Court, County Attorneys, local law enforcement agencies, employers, workforce programs, parenting programs, and other stakeholders are dedicated to supporting the efforts of Arizona's parents to encourage engagement with their children; and

WHEREAS, both parent and child benefit when both parents are engaged at every stage.

NOW, THEREFORE, BE IT RESOLVED that, we, the members of the Gila County Board of Supervisors do hereby proclaim August 1-31, 2012, as Child Support Awareness Month in Gila County, and

BE IT FURTHER RESOLVED that Gila County reaffirms its commitment to support the Gila County Child Support Program during the month of August 2012 and throughout the year.

PASSED AND ADOPTED this 7th day of August 2012.

ATTEST:

_____
Marian Sheppard
Chief Deputy Clerk

GILA COUNTY BOARD OF SUPERVISORS

_____
Tommie C. Martin, Chairman

_____
Shirley L. Dawson, Vice-Chairman

_____
Michael A. Pastor, Member

Janice K. Brewer
Governor

Office of the Governor

*** CHILD SUPPORT AWARENESS MONTH ***

WHEREAS, children need responsible parents who are engaged at every stage of their child's development; and

WHEREAS, to be engaged, both parents must be involved in providing for a child's emotional and financial needs, and encourage their interests; and

WHEREAS, Arizona's Centennial reminds us that the State of Arizona was built on family values, including parent engagement; and

WHEREAS, a parent can be actively and successfully engaged with their children regardless of marital status; and

WHEREAS, the Arizona Department of Economic Security, Arizona Attorney General's Office, Administrative Offices of the Court, County Attorneys, local law enforcement agencies, employers, workforce programs, parenting programs, and other stakeholders are dedicated to supporting the efforts of Arizona's parents to encourage engagement with their children; and

WHEREAS, both parent and child benefit when both parents are engaged at every stage.

NOW, THEREFORE, I, Janice K. Brewer, Governor of the State of Arizona, do hereby proclaim August 2012 as

*** CHILD SUPPORT AWARENESS MONTH ***

IN WITNESS WHEREOF, I have hereunto set my hand and caused to be affixed the Great Seal of the State of Arizona

Janice K. Brewer
GOVERNOR

DONE at the Capitol in Phoenix on this third day of July in the year Two Thousand and Twelve, and of the Independence of the United States of America the Two Hundred and Thirty-sixth.

ATTEST:

Ken Bennett
Secretary of State

ARF-1398 **Regular Agenda Item 3- B**

Regular BOS Meeting

Meeting Date: 08/07/2012

Submitted For:	Jacque Griffin, Asst. County Manager/Librarian	Submitted By:	Mary Stemm, Library Assistant Senior, Asst County Manager/Library District
Department:	Asst County Manager/Library District	Division:	Library District
Fiscal Year:	2013	Budgeted?:	Yes
Contract Dates Begin & End:	July 1, 2012-June 30, 2013	Grant?:	No
Matching Requirement?:	No	Fund?:	Renewal

Information

Request/Subject

Library Service Agreements with Hayden, Isabelle Hunt (Pine), Miami, Payson, Tonto Basin and Young Libraries.

Background Information

The Gila County Library District contracts yearly with the eight affiliate libraries to cooperate in the provision of library services to the citizens of the District. These Library Service Agreements serve as contracts for facilitating funding and resource sharing. At this time six of the eight agreements have been signed and returned.

Evaluation

The funding amounts from the Library District to the public libraries have not changed from last year. Funding varies by type and size of entity. The Library District matches up to an upper limit for city, town and tribal libraries. Funding without a match requirement is provided to the community libraries that are not in incorporated areas. Library District funding for the libraries is as follows; Hayden Public Library - match up to $52,100; Isabelle Hunt Memorial Library - fund $104,750; Miami Memorial Library - match up to $43,600; Payson Public Library - match up to $229,230; Tonto Basin Public Library - fund $60,950; and Young Public Library - fund $57,670. The Library District distributes these amounts in two installments, in November 2012 and May 2013.

Conclusion

Approval of the Library Service Agreements facilitates funding and resource sharing with the affiliate libraries.

Recommendation

The Gila County District Librarian recommends the approval of the Library Service Agreements between the Gila County Library District and Hayden Public Library, Isabelle Hunt Memorial Library (Pine), Miami Memorial Library, Payson Public Library, Tonto Basin Public Library and Young Public Library for fiscal year 2012-2013.

Suggested Motion

(Motion to adjourn as the Board of Supervisors and convene as the Gila County Library District Board of Directors.) Information/Discussion/Action to approve Library Service Agreements between the Gila County Library District and the following libraries to cooperate in the provision of library services to the citizens of the District for the period July 1, 2012 through June 30, 2013: Hayden Public Library - match up to $52,100; Isabelle Hunt Memorial Library - fund $104,750; Miami Memorial Library - match up to $43,600; Payson Public Library - match up to $229,230; Tonto Basin Public Library - fund $60,950; and Young Public Library - fund $57,670.
(John Nelson)
(Motion to adjourn as the Library district Board of Directors and reconvene as the Board of Supervisors.)

Attachments

Hayden Library Service Agreement

Isabelle Hunt Memorial Library Service Agreement

Miami Library Service Agreement

Payson Library Service Agreement

Tonto Basin Library Service Agreement

Young Public Library Service Agreement

IGA Legal Explanation
Non-IGA Legal Explanation

GILA COUNTY LIBRARY DISTRICT
LIBRARY SERVICE AGREEMENT
JULY 1, 2012 TO JUNE 30, 2013

This agreement is entered into between the GILA COUNTY LIBRARY DISTRICT, hereinafter referred to as the "District," and the TOWN OF HAYDEN, hereinafter referred to as the "Town," and shall be for a period commencing July 1, 2012 to June 30, 2013.

WHEREAS, the Gila County Board of Supervisors has established a County Library District, pursuant to A.R.S. 11-901 et seq. and 48-3901 et seq.; and

WHEREAS, the District and the Town recognize the need to cooperate in the provision of library services to the citizens of the District; and

WHEREAS, the Town operates and maintains a library and it is the desire of the Town to continue as a participating member of the District; and

WHEREAS, the parties wish to establish terms and conditions prior to distribution of District tax levied funds to participating Towns.

NOW THEREFORE IT IS AGREED by and between the District and the Town as follows:

1. All citizens of the District shall have full use of the library facilities and services.

2. All library materials purchased with District funds by the Town, are the property of the Town.

3. It is understood by both parties that officials, employees and agents of the District remain the sole responsibility of the District. It is further understood that the officials, employees and agents of the Town remain the sole responsibility of the Town.

4. Each party (as "indemnitor") agrees to indemnify, defend and hold harmless the other party (as "indemnitee") from and against any and all claims, losses, liability, costs or other expenses including reasonable attorney's fees (hereinafter collectively referred to as "claims") arising out of bodily injury of any person (including death) or property damage, but only to the extent that such claims which result in vicarious/derivative liability to the indemnitee, are caused by the act, omission, negligence, misconduct or other fault of the indemnitor, its officers, official agents, employees or volunteers.

5. The Town agrees to the following conditions:

   A. The Town shall use the District funds to insure the payments of salaries, routine maintenance and upkeep and other necessary expenses of the Town's library, pursuant to ARS 48 - 3901 et seq. Funds will not be used for capital improvement projects or major building repairs without prior approval from the Board of Directors of the Gila County Library District.

   B. The Town shall annually submit to the District the Arizona Public Library Data Report as required by the State Library.

   C. The Town shall support resource sharing among libraries by participating in interlibrary loan services as a borrower and lender of library materials.

   D. The Town shall comply with any reasonable conditions or restrictions which the District or another participating library imposes with respect to loans of books, materials, or equipment to the Town library.

   E. The Town agrees to reimburse any other participating library for any losses and/or damage to books, materials, or equipment belonging to another participating library or the District, which occur while these items are in the possession and control of the Town.

   F. The Town's decision to participate in a countywide online system is evidenced by the authorized signature(s) on this Agreement. The Town agrees to utilize the online system for: cataloging, circulation, online shared public access catalog, long-term loan of supplementary Library District materials, if applicable, and other online functions as may be implemented.

   G. The Town shall insure that the Library Manager (Librarian) and staff understand and are proficient in all functions of the online system that they are responsible for by providing reasonable time for staff to attend training on the online system at the District's recommendation. Training will be overseen by, and coordinated through the District.

   H. Town library staff agrees to attend and participate in at least three of the four quarterly countywide librarians meetings each year.

6. The District will provide the following benefits and support services to the library:

   A. Opportunity to participate in a countywide online system subject to conditions specified in this agreement. Operation of the countywide online system is a Library District function subject to oversight by the Board of Directors of the Library District, who will make final decisions regarding this system.

   B. Operate the online system continuously, notifying the participating library in advance of any scheduled shutdowns, should any be necessary for maintenance and backup routines.

C. Coordination of countywide library development.

D. Continuing education opportunities for staff and volunteers.

E. Offer regular orientation training on the online system for all new staff at the affiliate libraries, as well as coordinate and oversee special update training for veteran staff.

F. Professional assistance and consultation services.

7. The Town and the District acknowledge that the services performed have a value to the District and the Town. In consideration of that value, the District agrees:

   A. To match the Town local funds for library services, up to the amount of $52,100.00 such amount subject to annual review.

   B. To distribute this amount in two installments, in November 2012 and May 2013.

8. This agreement may be renewed from year to year by mutual agreement of the parties involved.

9. **Legal Arizona Workers Act Compliance**

   The City hereby warrants that it will at all times during the term of this Contract comply with all federal immigration laws applicable to City's employment of its employees, and with the requirements of A.R.S. § 23-214 (A) (together the "State and Federal Immigration Laws"). City shall further ensure that each subcontractor who performs any work for City under this contract likewise complies with the State and Federal Immigration Laws.

   The District shall have the right at any time to inspect the books and records of City and any subcontractor in order to verify such party's compliance with the State and Federal Immigration Laws.

   Any breach of City's or any subcontractor's warranty of compliance with the State and Federal Immigration Laws, or of any other provision of this section, shall be deemed to be a material breach of this Contract subjecting City to penalties up to and including suspension or termination of this Contract. If the breach is by a subcontractor, and the subcontract is suspended or terminated as a result, City shall be required to take such steps as may be necessary to either self-perform the services that would have been provided under the subcontract or retain a replacement subcontractor as soon as possible so as not to delay project completion.

   The City shall advise each subcontractor of District's rights, and the subcontractor's obligations, under this Article by including a provision in each subcontract substantially in the following form: "Subcontractor hereby warrants that it will at all times during the term of this contract comply with all federal immigration laws applicable to Subcontractor's employees, and with the requirements of A.R.S. § 23-214 (A). Subcontractor further agrees that District may inspect the Subcontractor's books and records to insure that Subcontractor

is in compliance with these requirements. Any breach of this paragraph by Subcontractor will be deemed to be a material breach of this contract subjecting Subcontractor to penalties up to and including suspension or termination of this contract."

Any additional costs attributable directly or indirectly to remedial action under this Article shall be the responsibility of the City.

10. This agreement contains the entire agreement of the parties with respect to the subject matter hereof and, it may be amended, modified or waived only by an instrument in writing signed by both parties.

11. This agreement may be canceled pursuant to A.R.S. 38-511, the pertinent provisions of which are fully incorporated herein by reference.

12. Either party may terminate this Agreement by giving 30 days' notice to the other. Upon termination of this Agreement by either party, the Town agrees to return to the owner, by the date of termination, any books, materials and equipment belonging to the Library District or other participating library, which had been entrusted to the possession or control of the Town. Conversely, the Library District agrees to deliver to the Town library, by the date of termination, any books, materials, and equipment belonging to the Town library which had been entrusted to the possession or control of the Library District and to make reasonable, good faith efforts to return to the Town library any books, materials and equipment belonging to the Town library which had been entrusted to the possession or control of another participating library.

13. Any dispute, controversy, claim, or cause of action arising out of or related to this agreement shall be governed by Arizona law and may, but in no event need, be settled by submission with the consent of both parties to binding arbitration in accordance with the rules of the American Arbitration Association and the Arizona Uniform Arbitration Act, ARS 12 - 1501, et seq., and judgment upon any award rendered by the arbitrators may be entered in the Superior Court of Gila County, or any such dispute, controversy, claim, or cause of action may be litigated in a court. The venue for any such dispute shall be Gila County, Arizona. Each party waives the right to object to venue in Gila County for any reason. Neither party shall be entitled to recover any of its attorneys' fees or other costs from the other party incurred in any such dispute, controversy, claim or cause of action, but each party shall bear its own attorneys' fees and costs, whether the same is resolved through arbitration, litigation in a court, or otherwise.

IN WITNESS THEREOF, the parties have caused this agreement to be executed by their duly authorized representatives.

TOWN OF HAYDEN

Mayor

ATTEST:

Town Clerk

Date

GILA COUNTY LIBRARY DISTRICT

Chairman, Board of Directors

ATTEST:

Clerk of the Board

Date

Pursuant to A.R.S. 11-952(D) the foregoing agreement has been reviewed by the undersigned attorney for the Town, who has determined that the agreement is in proper form and is within the powers and authority granted under the laws of the State to the Town.

Town Attorney

Pursuant to A.R.S. 11-952(D) the foregoing agreement has been reviewed by the undersigned attorney for the Gila County Library District, who has determined that the agreement is in proper form and is within the powers and authority granted under the laws of the State to Gila County.

Chief Deputy County Attorney

GILA COUNTY LIBRARY DISTRICT
LIBRARY SERVICE AGREEMENT
JULY 1, 2012 TO JUNE 30, 2013

This agreement is entered into between the GILA COUNTY LIBRARY DISTRICT, hereinafter referred to as the "District," and the Board of the ISABELLE HUNT MEMORIAL LIBRARY, hereinafter referred to as the "Board" and shall be for a period commencing July 1, 2012 to June 30, 2013.

WHEREAS, the Gila County Board of Supervisors has established a County Library District, pursuant to A.R.S. 11-901 et seq. and 48-3901 et seq.; and

WHEREAS, the District and the Board recognize the need to cooperate in the provision of library services to the citizens of the District; and

WHEREAS, the Board operates and maintains a library and it is the desire of the Board to join the District and to continue as an established station of the District; and

WHEREAS, the parties wish to establish terms and conditions prior to distribution of District tax levied funds to participating boards.

NOW THEREFORE IT IS AGREED by and between the District and the Board as follows:

1. All citizens of the District shall have full use of the library facilities and services.

2. All library materials purchased with District funds by the Board, are the property of the Board.

3. It is understood by both parties that officials, employees and agents of the District remain the sole responsibility of the District. It is further understood that the officials, employees and agents of the Board remain the sole responsibility of the Board.

4. Each party (as "indemnitor") agrees to indemnify, defend and hold harmless the other party (as "indemnitee") from and against any and all claims, losses, liability, costs or other expenses including reasonable attorney's fees (hereinafter collectively referred to as "claims") arising out of bodily injury of any person (including death) or property damage, but only to the extent that such claims which result in vicarious/derivative liability to the indemnitee, are

caused by the act, omission, negligence, misconduct or other fault of the indemnitor, its officers, official agents, employees or volunteers.

5. The Board agrees to the following conditions:

   A. The Board shall use the District funds to insure the payments of salaries, routine maintenance and upkeep and other necessary expenses of the library, pursuant to ARS 48 - 3901 et seq. Funds will not be used for capital improvement projects or major building repairs without prior approval from the Board of Directors of the Gila County Library District. District funds may not be accumulated from year to year for capital projects. An annual written accounting shall be made to the District describing the manner and use of funds as required by the District.

   B. Because the Board receives public monies from the District, the Board shall conduct all business meetings in accordance with Arizona Open Meeting Laws, A.R.S. 38-431 et seq.

   C. The Board shall require that the library maintain a minimum of 24 public service hours each week. These hours may be inclusive of official holidays observed by Gila County.

   D. The Board shall annually submit to the District the Arizona Public Library Data Report as required by the State Library.

   E. The Board shall support resource sharing among libraries by participating in interlibrary loan services as a borrower and lender of library materials.

   F. The Board shall comply with any reasonable conditions or restrictions which the District or another participating library imposes with respect to loans of books, materials, or equipment to the station library.

   G. The Board agrees to reimburse any other participating library for any losses and/or damage to books, materials, or equipment belonging to another participating library or the District, which occur while these items are in the possession and control of the station library.

   H. The Board's decision to participate in a countywide online system is evidenced by the authorized signature(s) on this Agreement. The Board agrees to utilize the online system for: cataloging, circulation, online shared public access catalog, long-term loan of supplementary Library District materials, if applicable, and other online functions as may be implemented.

   I. The Board shall insure that the Library Manager (Librarian) and staff understand and are proficient in all functions of the online system that they are responsible for by providing reasonable time for staff to attend training

on the online system at the District's recommendation. Training will be overseen by, and coordinated through the District.

J. The Board shall require library staff or a representative to attend and participate in at least three of the four quarterly countywide librarians meetings each year.

6. The District will provide the following benefits and support services to the library:

   A. Opportunity to participate in a countywide online system subject to conditions specified in this agreement. Operation of the countywide online system is a Library District function subject to oversight by the Board of Directors of the Library District, who will make final decisions regarding this system.

   B. Operate the online system continuously, notifying the participating library in advance of any scheduled shutdowns, should any be necessary for maintenance and backup routines.

   C. Coordination of countywide library development.

   D. Continuing education opportunities for staff and volunteers.

   E. Offer regular orientation training on the online system for all new staff at the affiliate libraries, as well as coordinate and oversee special update training for veteran staff.

   F. Professional assistance and consultation services.

7. The Board and the District acknowledge that the services to be performed have a value to the District and to the Board. In consideration of that value, the District agrees:

   A. To pay the Board an amount not to exceed $104,750.00 for library services, such amount subject to annual review.

   B. To distribute this amount in two installments, November 2012, and May 2013.

8. This agreement may be renewed from year to year by mutual agreement of the parties involved.

9. **Legal Arizona Workers Act Compliance**

The Board hereby warrants that it will at all times during the term of this Contract comply with all federal immigration laws applicable to Board's employment of its employees, and with the requirements of A.R.S. § 23-214 (A) (together the "State and Federal Immigration Laws"). Board shall further ensure that each subcontractor who performs any work for Board under this contract likewise complies with the State and Federal Immigration Laws.

The District shall have the right at any time to inspect the books and records of Board and any subcontractor in order to verify such party's compliance with the State and Federal Immigration Laws.

Any breach of Board's or any subcontractor's warranty of compliance with the State and Federal Immigration Laws, or of any other provision of this section, shall be deemed to be a material breach of this Contract subjecting Board to penalties up to and including suspension or termination of this Contract. If the breach is by a subcontractor, and the subcontract is suspended or terminated as a result, Board shall be required to take such steps as may be necessary to either self-perform the services that would have been provided under the subcontract or retain a replacement subcontractor as soon as possible so as not to delay project completion.

The Board shall advise each subcontractor of District's rights, and the subcontractor's obligations, under this Article by including a provision in each subcontract substantially in the following form: "Subcontractor hereby warrants that it will at all times during the term of this contract comply with all federal immigration laws applicable to Subcontractor's employees, and with the requirements of A.R.S. § 23-214 (A). Subcontractor further agrees that District may inspect the Subcontractor's books and records to insure that Subcontractor is in compliance with these requirements. Any breach of this paragraph by Subcontractor will be deemed to be a material breach of this contract subjecting Subcontractor to penalties up to and including suspension or termination of this contract."

Any additional costs attributable directly or indirectly to remedial action under this Article shall be the responsibility of the Board.

10. This agreement contains the entire agreement of the parties with respect to the subject matter hereof and, it may be amended, modified or waived only by an instrument in writing signed by both parties.

11. This agreement may be canceled pursuant to A.R.S. 38-511, the pertinent provisions of which are fully incorporated herein by reference.

12. Either party may terminate this Agreement by giving 30 days' notice to the other. Upon termination of this Agreement by either party, the Board agrees to return to the owner, by the date of termination, any books, materials and equipment belonging to the Library District or other participating library, which had been entrusted to the possession or control of the Board. Conversely, the Library District agrees to deliver to the station library, by the date of termination, any books, materials, and equipment belonging to the station library which had been entrusted to the possession or control of the

Library District and to make reasonable, good faith efforts to return to the Board any books, materials and equipment belonging to the library which had been entrusted to the possession or control of another participating library.

IN WITNESS THEREOF, the parties have caused this agreement to be executed by their duly authorized representatives.

BOARD OF ISABELLE HUNT MEMORIAL LIBRARY	GILA COUNTY LIBRARY DISTRICT
Chairman of the Board	Chairman, Board of Directors
ATTEST:	ATTEST:
Secretary of the Board	Clerk of the Board
June 29, 2012 Date	Date

The foregoing agreement has been reviewed by the undersigned attorney for the Gila County Library District, who has determined that the agreement is in proper form and is within the powers and authority granted under the laws of the State to Gila County.

Chief Deputy County Attorney

GILA COUNTY LIBRARY DISTRICT
LIBRARY SERVICE AGREEMENT
JULY 1, 2012 TO JUNE 30, 2013

This agreement is entered into between the GILA COUNTY LIBRARY DISTRICT, hereinafter referred to as the "District," and the TOWN OF MIAMI, hereinafter referred to as the "Town," and shall be for a period commencing July 1, 2012 to June 30, 2013.

WHEREAS, the Gila County Board of Supervisors has established a County Library District, pursuant to A.R.S. 11-901 et seq. and 48-3901 et seq.; and

WHEREAS, the District and the Town recognize the need to cooperate in the provision of library services to the citizens of the District; and

WHEREAS, the Town operates and maintains a library and it is the desire of the Town to continue as a participating member of the District; and

WHEREAS, the parties wish to establish terms and conditions prior to distribution of District tax levied funds to participating Towns.

NOW THEREFORE IT IS AGREED by and between the District and the Town as follows:

1. All citizens of the District shall have full use of the library facilities and services.

2. All library materials purchased with District funds by the Town, are the property of the Town.

3. It is understood by both parties that officials, employees and agents of the District remain the sole responsibility of the District. It is further understood that the officials, employees and agents of the Town remain the sole responsibility of the Town.

4. Each party (as "indemnitor") agrees to indemnify, defend and hold harmless the other party (as "indemnitee") from and against any and all claims, losses, liability, costs or other expenses including reasonable attorney's fees (hereinafter collectively referred to as "claims") arising out of bodily injury of any person (including death) or property damage, but only to the extent that such claims which result in vicarious/derivative liability to the indemnitee, are caused by the act, omission, negligence, misconduct or other fault of the indemnitor, its officers, official agents, employees or volunteers.

5. The Town agrees to the following conditions:

   A. The Town shall use the District funds to insure the payments of salaries, routine maintenance and upkeep and other necessary expenses of the Town's library, pursuant to ARS 48 - 3901 et seq. Funds will not be used for capital improvement projects or major building repairs without prior approval from the Board of Directors of the Gila County Library District.

   B. The Town shall annually submit to the District the Arizona Public Library Data Report as required by the State Library.

   C. The Town shall support resource sharing among libraries by participating in interlibrary loan services as a borrower and lender of library materials.

   D. The Town shall comply with any reasonable conditions or restrictions which the District or another participating library imposes with respect to loans of books, materials, or equipment to the Town library.

   E. The Town agrees to reimburse any other participating library for any losses and/or damage to books, materials, or equipment belonging to another participating library or the District, which occur while these items are in the possession and control of the Town.

   F. The Town's decision to participate in a countywide online system is evidenced by the authorized signature(s) on this Agreement. The Town agrees to utilize the online system for: cataloging, circulation, online shared public access catalog, long-term loan of supplementary Library District materials, if applicable, and other online functions as may be implemented.

   G. The Town shall insure that the Library Manager (Librarian) and staff understand and are proficient in all functions of the online system that they are responsible for by providing reasonable time for staff to attend training on the online system at the District's recommendation. Training will be overseen by, and coordinated through the District.

   H. Town library staff agrees to attend and participate in at least three of the four quarterly countywide librarians meetings each year.

6. The District will provide the following benefits and support services to the library:

   A. Opportunity to participate in a countywide online system subject to conditions specified in this agreement. Operation of the countywide online system is a Library District function subject to oversight by the Board of Directors of the Library District, who will make final decisions regarding this system.

B. Operate the online system continuously, notifying the participating library in advance of any scheduled shutdowns, should any be necessary for maintenance and backup routines.

C. Coordination of countywide library development.

D. Continuing education opportunities for staff and volunteers.

E. Offer regular orientation training on the online system for all new staff at the affiliate libraries, as well as coordinate and oversee special update training for veteran staff.

F. Professional assistance and consultation services.

7. The Town and the District acknowledge that the services performed have a value to the District and the Town. In consideration of that value, the District agrees:

   A. To match the Town local funds for library services, up to the amount of $43,600.00, such amount subject to annual review.

   B. To distribute this amount in two installments, in November 2012 and May 2013.

8. This agreement may be renewed from year to year by mutual agreement of the parties involved.

9. This agreement contains the entire agreement of the parties with respect to the subject matter hereof and, it may be amended, modified or waived only by an instrument in writing signed by both parties.

10. This agreement may be canceled pursuant to A.R.S. 38-511, the pertinent provisions of which are fully incorporated herein by reference.

11. Either party may terminate this Agreement by giving 30 days' notice to the other. Upon termination of this Agreement by either party, the Town agrees to return to the owner, by the date of termination, any books, materials and equipment belonging to the Library District or other participating library, which had been entrusted to the possession or control of the Town. Conversely, the Library District agrees to deliver to the Town library, by the date of termination, any books, materials, and equipment belonging to the Town library which had been entrusted to the possession or control of the Library District and to make reasonable, good faith efforts to return to the Town library any books, materials and equipment belonging to the Town library which had been entrusted to the possession or control of another participating library.

12. **Legal Arizona Workers Act Compliance**

The Town hereby warrants that it will at all times during the term of this Contract comply with all federal immigration laws applicable to Town's employment of its employees, and with the requirements of A.R.S. § 23-214 (A) (together the "State and Federal Immigration Laws"). Town shall further ensure that each subcontractor who performs any work for Town under this contract likewise complies with the State and Federal Immigration Laws.

The District shall have the right at any time to inspect the books and records of Town and any subcontractor in order to verify such party's compliance with the State and Federal Immigration Laws.

Any breach of Town's or any subcontractor's warranty of compliance with the State and Federal Immigration Laws, or of any other provision of this section, shall be deemed to be a material breach of this Contract subjecting Town to penalties up to and including suspension or termination of this Contract. If the breach is by a subcontractor, and the subcontract is suspended or terminated as a result, Town shall be required to take such steps as may be necessary to either self-perform the services that would have been provided under the subcontract or retain a replacement subcontractor as soon as possible so as not to delay project completion.

The Town shall advise each subcontractor of District's rights, and the subcontractor's obligations, under this Article by including a provision in each subcontract substantially in the following form: "Subcontractor hereby warrants that it will at all times during the term of this contract comply with all federal immigration laws applicable to Subcontractor's employees, and with the requirements of A.R.S. § 23-214 (A). Subcontractor further agrees that District may inspect the Subcontractor's books and records to insure that Subcontractor is in compliance with these requirements. Any breach of this paragraph by Subcontractor will be deemed to be a material breach of this contract subjecting Subcontractor to penalties up to and including suspension or termination of this contract."

Any additional costs attributable directly or indirectly to remedial action under this Article shall be the responsibility of the Town.

13. Any dispute, controversy, claim, or cause of action arising out of or related to this agreement shall be governed by Arizona law and may, but in no event need, be settled by submission with the consent of both parties to binding arbitration in accordance with the rules of the American Arbitration Association and the Arizona Uniform Arbitration Act, ARS 12 - 1501, et seq., and judgment upon any award rendered by the arbitrators may be entered in the Superior Court of Gila County, or any such dispute, controversy, claim, or cause of action may be litigated in a court. The venue for any such dispute shall be Gila County, Arizona. Each party waives the right to object to venue in Gila County for any reason. Neither party shall be entitled to recover any of its attorneys' fees or other costs from the other party incurred in any such dispute, controversy, claim or cause of action, but each party shall bear its own attorneys' fees and costs, whether the same is resolved through arbitration, litigation in a court, or otherwise.

IN WITNESS THEREOF, the parties have caused this agreement to be executed by their duly authorized representatives.

TOWN OF MIAMI	GILA COUNTY LIBRARY DISTRICT
Rosemary Castaneda Mayor	Chairman, Board of Directors
ATTEST:	ATTEST:
Karen Rossi Town Clerk	Clerk of the Board
6-25-12 Date	Date

Pursuant to A.R.S. 11-952(D) the foregoing agreement has been reviewed by the undersigned attorney for the Town, who has determined that the agreement is in proper form and is within the powers and authority granted under the laws of the State to the Town.

Tyli Smiley
Town Attorney

Pursuant to A.R.S. 11-952(D) the foregoing agreement has been reviewed by the undersigned attorney for the Gila County Library District, who has determined that the agreement is in proper form and is within the powers and authority granted under the laws of the State to Gila County.

Chief Deputy County Attorney

GILA COUNTY LIBRARY DISTRICT
LIBRARY SERVICE AGREEMENT
JULY 1, 2012 TO JUNE 30, 2013

This agreement is entered into between the GILA COUNTY LIBRARY DISTRICT, hereinafter referred to as the "District," and the TOWN OF PAYSON, hereinafter referred to as the "Town," and shall be for a period commencing July 1, 2012 to June 30, 2013.

WHEREAS, the Gila County Board of Supervisors has established a County Library District, pursuant to A.R.S. 11-901 et seq. and 48-3901 et seq.; and

WHEREAS, the District and the Town recognize the need to cooperate in the provision of library services to the citizens of the District; and

WHEREAS, the Town operates and maintains a library and it is the desire of the Town to continue as a participating member of the District; and

WHEREAS, the parties wish to establish terms and conditions prior to distribution of District tax levied funds to participating Towns.

NOW THEREFORE IT IS AGREED by and between the District and the Town as follows:

1. All citizens of the District shall have full use of the library facilities and services.

2. All library materials purchased with District funds by the Town, are the property of the Town.

3. It is understood by both parties that officials, employees and agents of the District remain the sole responsibility of the District. It is further understood that the officials, employees and agents of the Town remain the sole responsibility of the Town.

4. Each party (as "indemnitor") agrees to indemnify, defend and hold harmless the other party (as "indemnitee") from and against any and all claims, losses, liability, costs or other expenses including reasonable attorney's fees (hereinafter collectively referred to as "claims") arising out of bodily injury of any person (including death) or property damage, but only to the extent that such claims which result in vicarious/derivative liability to the indemnitee, are caused by the act, omission, negligence, misconduct or other fault of the indemnitor, its officers, official agents, employees or volunteers.

5. The Town agrees to the following conditions:

   A. The Town shall use the District funds to insure the payments of salaries, routine maintenance and upkeep and other necessary expenses of the Town's library, pursuant to ARS 48 - 3901 et seq. Funds will not be used for capital improvement projects or major building repairs without prior approval from the Board of Directors of the Gila County Library District.

   B. The Town shall annually submit to the District the Arizona Public Library Data Report as required by the State Library.

   C. The Town shall support resource sharing among libraries by participating in interlibrary loan services as a borrower and lender of library materials.

   D. The Town shall comply with any reasonable conditions or restrictions which the District or another participating library imposes with respect to loans of books, materials, or equipment to the Town library.

   E. The Town agrees to reimburse any other participating library for any losses and/or damage to books, materials, or equipment belonging to another participating library or the District, which occur while these items are in the possession and control of the Town.

   F. The Town's decision to participate in a countywide online system is evidenced by the authorized signature(s) on this Agreement. The Town agrees to utilize the online system for: cataloging, circulation, online shared public access catalog, long-term loan of supplementary Library District materials, if applicable, and other online functions as may be implemented.

   G. The Town shall insure that the Library Manager (Librarian) and staff understand and are proficient in all functions of the online system that they are responsible for by providing reasonable time for staff to attend training on the online system at the District's recommendation. Training will be overseen by, and coordinated through the District.

   H. Town library staff agrees to attend and participate in at least three of the four quarterly countywide librarians meetings each year.

6. The District will provide the following benefits and support services to the library:

   A. Opportunity to participate in a countywide online system subject to conditions specified in this agreement. Operation of the countywide online system is a Library District function subject to oversight by the Board of Directors of the Library District, who will make final decisions regarding this system.

   B. Operate the online system continuously, notifying the participating library in advance of any scheduled shutdowns, should any be necessary for maintenance and backup routines.

C. Coordination of countywide library development.

D. Continuing education opportunities for staff and volunteers.

E. Offer regular orientation training on the online system for all new staff at the affiliate libraries, as well as coordinate and oversee special update training for veteran staff.

F. Professional assistance and consultation services.

7. The Town and the District acknowledge that the services performed have a value to the District and the Town. In consideration of that value, the District agrees:

   A. To match the Town local funds for library services, up to the amount of $229,230.00, such amount subject to annual review.

   B. To distribute this amount in two installments, in November 2012 and May 2013.

8. This agreement may be renewed from year to year by mutual agreement of the parties involved.

9. This agreement contains the entire agreement of the parties with respect to the subject matter hereof and, it may be amended, modified or waived only by an instrument in writing signed by both parties.

10. This agreement may be canceled pursuant to A.R.S. 38-511, the pertinent provisions of which are fully incorporated herein by reference.

11. Either party may terminate this Agreement by giving 30 days' notice to the other. Upon termination of this Agreement by either party, the Town agrees to return to the owner, by the date of termination, any books, materials and equipment belonging to the Library District or other participating library, which had been entrusted to the possession or control of the Town. Conversely, the Library District agrees to deliver to the Town library, by the date of termination, any books, materials, and equipment belonging to the Town library which had been entrusted to the possession or control of the Library District and to make reasonable, good faith efforts to return to the Town library any books, materials and equipment belonging to the Town library which had been entrusted to the possession or control of another participating library.

12. **Legal Arizona Workers Act Compliance**
    The Town hereby warrants that it will at all times during the term of this Contract comply with all federal immigration laws applicable to Town's employment of its employees, and with the requirements of A.R.S. § 23-214 (A) (together the "State and Federal Immigration Laws"). Town shall further ensure that each subcontractor who performs any work for Town under this

contract likewise complies with the State and Federal Immigration Laws.

The District shall have the right at any time to inspect the books and records of Town and any subcontractor in order to verify such party's compliance with the State and Federal Immigration Laws.

Any breach of Town's or any subcontractor's warranty of compliance with the State and Federal Immigration Laws, or of any other provision of this section, shall be deemed to be a material breach of this Contract subjecting Town to penalties up to and including suspension or termination of this Contract. If the breach is by a subcontractor, and the subcontract is suspended or terminated as a result, Town shall be required to take such steps as may be necessary to either self-perform the services that would have been provided under the subcontract or retain a replacement subcontractor as soon as possible so as not to delay project completion.

The Town shall advise each subcontractor of District's rights, and the subcontractor's obligations, under this Article by including a provision in each subcontract substantially in the following form: "Subcontractor hereby warrants that it will at all times during the term of this contract comply with all federal immigration laws applicable to Subcontractor's employees, and with the requirements of A.R.S. § 23-214 (A). Subcontractor further agrees that District may inspect the Subcontractor's books and records to insure that Subcontractor is in compliance with these requirements. Any breach of this paragraph by Subcontractor will be deemed to be a material breach of this contract subjecting Subcontractor to penalties up to and including suspension or termination of this contract."

Any additional costs attributable directly or indirectly to remedial action under this Article shall be the responsibility of the Town.

13. Any dispute, controversy, claim, or cause of action arising out of or related to this agreement shall be governed by Arizona law and may, but in no event need, be settled by submission with the consent of both parties to binding arbitration in accordance with the rules of the American Arbitration Association and the Arizona Uniform Arbitration Act, ARS 12 - 1501, et seq., and judgment upon any award rendered by the arbitrators may be entered in the Superior Court of Gila County, or any such dispute, controversy, claim, or cause of action may be litigated in a court. The venue for any such dispute shall be Gila County, Arizona. Each party waives the right to object to venue in Gila County for any reason. Neither party shall be entitled to recover any of its attorneys' fees or other costs from the other party incurred in any such dispute, controversy, claim or cause of action, but each party shall bear its own attorneys' fees and costs, whether the same is resolved through arbitration, litigation in a court, or otherwise.

IN WITNESS THEREOF, the parties have caused this agreement to be executed by their duly authorized representatives.

TOWN OF PAYSON

Mayor

ATTEST:

Town Clerk

June 25, 2012
Date

GILA COUNTY LIBRARY DISTRICT

Chairman, Board of Directors

ATTEST:

Clerk of the Board

Date

Pursuant to A.R.S. 11-952(D) the foregoing agreement has been reviewed by the undersigned attorney for the Town, who has determined that the agreement is in proper form and is within the powers and authority granted under the laws of the State to the Town.

Town Attorney

Pursuant to A.R.S. 11-952(D) the foregoing agreement has been reviewed by the undersigned attorney for the Gila County Library District, who has determined that the agreement is in proper form and is within the powers and authority granted under the laws of the State to Gila County.

Chief Deputy County Attorney, Gila County

GILA COUNTY LIBRARY DISTRICT
LIBRARY SERVICE AGREEMENT
JULY 1, 2012 TO JUNE 30, 2013

This agreement is entered into between the GILA COUNTY LIBRARY DISTRICT, hereinafter referred to as the "District," and the Board of the TONTO BASIN PUBLIC LIBRARY, hereinafter referred to as the "Board" and shall be for a period commencing July 1, 2012 to June 30, 2013.

WHEREAS, the Gila County Board of Supervisors has established a County Library District, pursuant to A.R.S. 11-901 et seq. and 48-3901 et seq.; and

WHEREAS, the District and the Board recognize the need to cooperate in the provision of library services to the citizens of the District; and

WHEREAS, the Board operates and maintains a library and it is the desire of the Board to join the District and to continue as an established station of the District; and

WHEREAS, the parties wish to establish terms and conditions prior to distribution of District tax levied funds to participating boards.

NOW THEREFORE IT IS AGREED by and between the District and the Board as follows:

1. All citizens of the District shall have full use of the library facilities and services.

2. All library materials purchased with District funds by the Board, are the property of the Board.

3. It is understood by both parties that officials, employees and agents of the District remain the sole responsibility of the District. It is further understood that the officials, employees and agents of the Board remain the sole responsibility of the Board.

4. Each party (as "indemnitor") agrees to indemnify, defend and hold harmless the other party (as "indemnitee") from and against any and all claims, losses, liability, costs or other expenses including reasonable attorney's fees (hereinafter collectively referred to as "claims") arising out of bodily injury of any person (including death) or property damage, but only to the extent that such claims which result in vicarious/derivative liability to the indemnitee, are

caused by the act, omission, negligence, misconduct or other fault of the indemnitor, its officers, official agents, employees or volunteers.

5. The Board agrees to the following conditions:

   A. The Board shall use the District funds to insure the payments of salaries, routine maintenance and upkeep and other necessary expenses of the library, pursuant to ARS 48 - 3901 et seq. Funds will not be used for capital improvement projects or major building repairs without prior approval from the Board of Directors of the Gila County Library District. District funds may not be accumulated from year to year for capital projects. An annual written accounting shall be made to the District describing the manner and use of funds as required by the District.

   B. Because the Board receives public monies from the District, the Board shall conduct all business meetings in accordance with Arizona Open Meeting Laws, A.R.S. 38-431 et seq.

   C. The Board shall require that the library maintain a minimum of 24 public service hours each week. These hours may be inclusive of official holidays observed by Gila County.

   D. The Board shall annually submit to the District the Arizona Public Library Data Report as required by the State Library.

   E. The Board shall support resource sharing among libraries by participating in interlibrary loan services as a borrower and lender of library materials.

   F. The Board shall comply with any reasonable conditions or restrictions which the District or another participating library imposes with respect to loans of books, materials, or equipment to the station library.

   G. The Board agrees to reimburse any other participating library for any losses and/or damage to books, materials, or equipment belonging to another participating library or the District, which occur while these items are in the possession and control of the station library.

   H. The Board's decision to participate in a countywide online system is evidenced by the authorized signature(s) on this Agreement. The Board agrees to utilize the online system for: cataloging, circulation, online shared public access catalog, long-term loan of supplementary Library District materials, if applicable, and other online functions as may be implemented.

   I. The Board shall insure that the Library Manager (Librarian) and staff understand and are proficient in all functions of the online system that they are responsible for by providing reasonable time for staff to attend training

on the online system at the District's recommendation. Training will be overseen by, and coordinated through the District.

J. The Board shall require library staff or a representative to attend and participate in at least three of the four quarterly countywide librarians meetings each year.

6. The District will provide the following benefits and support services to the library:

   A. Opportunity to participate in a countywide online system subject to conditions specified in this agreement. Operation of the countywide online system is a Library District function subject to oversight by the Board of Directors of the Library District, who will make final decisions regarding this system.

   B. Operate the online system continuously, notifying the participating library in advance of any scheduled shutdowns, should any be necessary for maintenance and backup routines.

   C. Coordination of countywide library development.

   D. Continuing education opportunities for staff and volunteers.

   E. Offer regular orientation training on the online system for all new staff at the affiliate libraries, as well as coordinate and oversee special update training for veteran staff.

   F. Professional assistance and consultation services.

7. The Board and the District acknowledge that the services to be performed have a value to the District and to the Board. In consideration of that value, the District agrees:

   A. To pay the Board an amount not to exceed $60,950.00 for library services, such amount subject to annual review.

   B. To distribute this amount in two installments, November 2012, and May 2013.

8. This agreement may be renewed from year to year by mutual agreement of the parties involved.

9. **Legal Arizona Workers Act Compliance**

The Board hereby warrants that it will at all times during the term of this Contract comply with all federal immigration laws applicable to Board's employment of its employees, and with the requirements of A.R.S. § 23-214 (A)

(together the "State and Federal Immigration Laws"). Board shall further ensure that each subcontractor who performs any work for Board under this contract likewise complies with the State and Federal Immigration Laws.

The District shall have the right at any time to inspect the books and records of Board and any subcontractor in order to verify such party's compliance with the State and Federal Immigration Laws.

Any breach of Board's or any subcontractor's warranty of compliance with the State and Federal Immigration Laws, or of any other provision of this section, shall be deemed to be a material breach of this Contract subjecting Board to penalties up to and including suspension or termination of this Contract. If the breach is by a subcontractor, and the subcontract is suspended or terminated as a result, Board shall be required to take such steps as may be necessary to either self-perform the services that would have been provided under the subcontract or retain a replacement subcontractor as soon as possible so as not to delay project completion.

The Board shall advise each subcontractor of District's rights, and the subcontractor's obligations, under this Article by including a provision in each subcontract substantially in the following form: "Subcontractor hereby warrants that it will at all times during the term of this contract comply with all federal immigration laws applicable to Subcontractor's employees, and with the requirements of A.R.S. § 23-214 (A). Subcontractor further agrees that District may inspect the Subcontractor's books and records to insure that Subcontractor is in compliance with these requirements. Any breach of this paragraph by Subcontractor will be deemed to be a material breach of this contract subjecting Subcontractor to penalties up to and including suspension or termination of this contract."

Any additional costs attributable directly or indirectly to remedial action under this Article shall be the responsibility of the Board.

10. This agreement contains the entire agreement of the parties with respect to the subject matter hereof and, it may be amended, modified or waived only by an instrument in writing signed by both parties.

11. This agreement may be canceled pursuant to A.R.S. 38-511, the pertinent provisions of which are fully incorporated herein by reference.

12. Either party may terminate this Agreement by giving 30 days' notice to the other. Upon termination of this Agreement by either party, the Board agrees to return to the owner, by the date of termination, any books, materials and equipment belonging to the Library District or other participating library, which had been entrusted to the possession or control of the Board. Conversely, the Library District agrees to deliver to the station library, by the date of termination, any books, materials, and equipment belonging to the station library which had been entrusted to the possession or control of the Library District and to make reasonable, good faith efforts to return to the Board any books, materials and equipment belonging to the library which had been entrusted to the possession or control of another participating library.

IN WITNESS THEREOF, the parties have caused this agreement to be executed by their duly authorized representatives.

BOARD OF TONTO BASIN PUBLIC LIBRARY	GILA COUNTY LIBRARY DISTRICT
Diane M. Dawson VP	
Chairman of the Board	Chairman, Board of Directors
ATTEST:	ATTEST:
Secretary of the Board	Clerk of the Board
7-26-12	
Date	Date

The foregoing agreement has been reviewed by the undersigned attorney for the Gila County Library District, who has determined that the agreement is in proper form and is within the powers and authority granted under the laws of the State to Gila County.

Chief Deputy County Attorney, Gila County

GILA COUNTY LIBRARY DISTRICT
LIBRARY SERVICE AGREEMENT
JULY 1, 2012 TO JUNE 30, 2013

This agreement is entered into between the GILA COUNTY LIBRARY DISTRICT, hereinafter referred to as the "District," and the Board of the YOUNG PUBLIC LIBRARY, hereinafter referred to as the "Board" and shall be for a period commencing July 1, 2012 to June 30, 2013.

WHEREAS, the Gila County Board of Supervisors has established a County Library District, pursuant to A.R.S. 11-901 et seq. and 48-3901 et seq.; and

WHEREAS, the District and the Board recognize the need to cooperate in the provision of library services to the citizens of the District; and

WHEREAS, the Board operates and maintains a library and it is the desire of the Board to join the District and to continue as an established station of the District; and

WHEREAS, the parties wish to establish terms and conditions prior to distribution of District tax levied funds to participating boards.

NOW THEREFORE IT IS AGREED by and between the District and the Board as follows:

1. All citizens of the District shall have full use of the library facilities and services.

2. All library materials purchased with District funds by the Board, are the property of the Board.

3. It is understood by both parties that officials, employees and agents of the District remain the sole responsibility of the District. It is further understood that the officials, employees and agents of the Board remain the sole responsibility of the Board.

4. Each party (as "indemnitor") agrees to indemnify, defend and hold harmless the other party (as "indemnitee") from and against any and all claims, losses, liability, costs or other expenses including reasonable attorney's fees (hereinafter collectively referred to as "claims") arising out of bodily injury of any person (including death) or property damage, but only to the extent that such claims which result in vicarious/derivative liability to the indemnitee, are

caused by the act, omission, negligence, misconduct or other fault of the indemnitor, its officers, official agents, employees or volunteers.

5. The Board agrees to the following conditions:

   A. The Board shall use the District funds to insure the payments of salaries, routine maintenance and upkeep and other necessary expenses of the library, pursuant to ARS 48 - 3901 et seq. Funds will not be used for capital improvement projects or major building repairs without prior approval from the Board of Directors of the Gila County Library District. District funds may not be accumulated from year to year for capital projects. An annual written accounting shall be made to the District describing the manner and use of funds as required by the District.

   B. Because the Board receives public monies from the District, the Board shall conduct all business meetings in accordance with Arizona Open Meeting Laws, A.R.S. 38-431 et seq.

   C. The Board shall require that the library maintain a minimum of 24 public service hours each week. These hours may be inclusive of official holidays observed by Gila County.

   D. The Board shall annually submit to the District the Arizona Public Library Data Report as required by the State Library.

   E. The Board shall support resource sharing among libraries by participating in interlibrary loan services as a borrower and lender of library materials.

   F. The Board shall comply with any reasonable conditions or restrictions which the District or another participating library imposes with respect to loans of books, materials, or equipment to the station library.

   G. The Board agrees to reimburse any other participating library for any losses and/or damage to books, materials, or equipment belonging to another participating library or the District, which occur while these items are in the possession and control of the station library.

   H. The Board's decision to participate in a countywide online system is evidenced by the authorized signature(s) on this Agreement. The Board agrees to utilize the online system for: cataloging, circulation, online shared public access catalog, long-term loan of supplementary Library District materials, if applicable, and other online functions as may be implemented.

   I. The Board shall insure that the Library Manager (Librarian) and staff understand and are proficient in all functions of the online system that they are responsible for by providing reasonable time for staff to attend training

on the online system at the District's recommendation. Training will be overseen by, and coordinated through the District.

J. The Board shall require library staff or a representative to attend and participate in at least three of the four quarterly countywide librarians meetings each year.

6. The District will provide the following benefits and support services to the library:

   A. Opportunity to participate in a countywide online system subject to conditions specified in this agreement. Operation of the countywide online system is a Library District function subject to oversight by the Board of Directors of the Library District, who will make final decisions regarding this system.

   B. Operate the online system continuously, notifying the participating library in advance of any scheduled shutdowns, should any be necessary for maintenance and backup routines.

   C. Coordination of countywide library development.

   D. Continuing education opportunities for staff and volunteers.

   E. Offer regular orientation training on the online system for all new staff at the affiliate libraries, as well as coordinate and oversee special update training for veteran staff.

   F. Professional assistance and consultation services.

7. The Board and the District acknowledge that the services to be performed have a value to the District and to the Board. In consideration of that value, the District agrees:

   A. To pay the Board an amount not to exceed $57,670.00 for library services, such amount subject to annual review.

   B. To distribute this amount in two installments, November 2012, and May 2013.

8. This agreement may be renewed from year to year by mutual agreement of the parties involved.

9. **Legal Arizona Workers Act Compliance**
   The Board hereby warrants that it will at all times during the term of this Contract comply with all federal immigration laws applicable to Board's employment of its employees, and with the requirements of A.R.S. § 23-214

(A) (together the "State and Federal Immigration Laws"). Board shall further ensure that each subcontractor who performs any work for Board under this contract likewise complies with the State and Federal Immigration Laws.

The District shall have the right at any time to inspect the books and records of Board and any subcontractor in order to verify such party's compliance with the State and Federal Immigration Laws.

Any breach of Board's or any subcontractor's warranty of compliance with the State and Federal Immigration Laws, or of any other provision of this section, shall be deemed to be a material breach of this Contract subjecting Board to penalties up to and including suspension or termination of this Contract. If the breach is by a subcontractor, and the subcontract is suspended or terminated as a result, Board shall be required to take such steps as may be necessary to either self-perform the services that would have been provided under the subcontract or retain a replacement subcontractor as soon as possible so as not to delay project completion.

The Board shall advise each subcontractor of District's rights, and the subcontractor's obligations, under this Article by including a provision in each subcontract substantially in the following form: "Subcontractor hereby warrants that it will at all times during the term of this contract comply with all federal immigration laws applicable to Subcontractor's employees, and with the requirements of A.R.S. § 23-214 (A). Subcontractor further agrees that District may inspect the Subcontractor's books and records to insure that Subcontractor is in compliance with these requirements. Any breach of this paragraph by Subcontractor will be deemed to be a material breach of this contract subjecting Subcontractor to penalties up to and including suspension or termination of this contract."

Any additional costs attributable directly or indirectly to remedial action under this Article shall be the responsibility of the Board.

10. This agreement contains the entire agreement of the parties with respect to the subject matter hereof and, it may be amended, modified or waived only by an instrument in writing signed by both parties.

11. This agreement may be canceled pursuant to A.R.S. 38-511, the pertinent provisions of which are fully incorporated herein by reference.

12. Either party may terminate this Agreement by giving 30 days' notice to the other. Upon termination of this Agreement by either party, the Board agrees to return to the owner, by the date of termination, any books, materials and equipment belonging to the Library District or other participating library, which had been entrusted to the possession or control of the Board. Conversely, the Library District agrees to deliver to the station library, by the date of termination, any books, materials, and equipment belonging to the station library which had been entrusted to the possession or control of the Library District and to make reasonable, good faith efforts to return to the Board any books, materials and equipment belonging to the library which had been entrusted to the possession or control of another participating library.

IN WITNESS THEREOF, the parties have caused this agreement to be executed by their duly authorized representatives.

BOARD OF YOUNG PUBLIC LIBRARY	GILA COUNTY LIBRARY DISTRICT
Cynthia G Peak	
Chairman of the Board	Chairman, Board of Directors
ATTEST:	ATTEST:
Secretary of the Board	Clerk of the Board
7/14/2011	
Date	Date

The foregoing agreement has been reviewed by the undersigned attorney for the Gila County Library District, who has determined that the agreement is in proper form and is within the powers and authority granted under the laws of the State to Gila County.

Chief Deputy County Attorney, Gila County

GILA COUNTY ATTORNEY
Daisy Flores

Re: County Attorney's Office approval of IGA pursuant to A.R.S. § 11-952(D).

To whom it may concern:

The County Attorney's Office has reviewed the Intergovernmental Agreement attached to this agenda item and has determined that it is in its "proper form" and "is within the powers and authority granted under the laws of this state to such public agency or public procurement unit" pursuant to A.R.S. § A.R.S. § 11-952(D).

Explanation of the Gila County Attorney's Office Intergovernmental Agreement (IGA) Review

A.R.S. § 11-952(D) requires that

> every agreement or contract involving any public agency or public procurement unit of this state . . . before its execution, shall be submitted to the attorney for each such public agency or public procurement unit, who shall determine whether the agreement is in proper form and is within the powers and authority granted under the laws of this state to such public agency or public procurement unit.

In performing this review, the County Attorney's Office reviews IGAs to see that they are in "proper form" prior to their execution. "Proper form" means that the contract conforms to fundamental contract law, conforms to specific legislative requirements, and is within the powers and authority granted to the public agency. It does not mean that the County Attorney's Office approves of or supports the policy objectives contained in the IGA. That approval is solely the province of the public agency through its elected body.

Likewise, this approval is not a certification that the IGA has been properly executed. Proper execution can only be determined after all the entities entering into the IGA have taken legal action to approve the IGA. There is no statutory requirement for the County Attorney's Office to certify that IGAs are properly executed.

Nonetheless, it is imperative for each public agency to ensure that each IGA is properly executed because A.R.S. § 11-952(F) requires that "[a]ppropriate action … applicable to the governing bodies of the participating agencies approving or extending the duration of the … contract shall be necessary before any such agreement, contract or extension may be filed or become effective." This can be done by ensuring that the governing body gives the public proper notice of the meeting wherein action will be taken to approve the IGA, that the item is adequately described in the agenda accompanying the notice, and that the governing body takes such action. Any questions regarding whether the IGA has been properly executed may be directed to the County Attorney's Office.

Proper execution of IGAs is important because A.R.S. § 11-952(H) provides that "[p]ayment for services under this section shall not be made unless pursuant to a fully approved written contract." Additionally, A.R.S. § 11-952(I) provides that "[a] person who authorizes payment of any monies in violation of this section is liable for the monies paid plus twenty per cent of such amount and legal interest from the date of payment."

The public agency or department submitting the IGA for review has the responsibility to read and understand the IGA in order to completely understand its obligations under the IGA if it is ultimately approved by the public entity's board. This is because while the County Attorney's Office can approve the IGA as to form, the office may not have any idea whether the public agency has the capacity to actually comply with its contractual obligations. Also, the County Attorney's Office does not monitor IGA compliance. Hence the public entity or submitting department will need to be prepared to monitor their own compliance. A thorough knowledge of the provisions of the IGA will be necessary to monitor compliance.

Before determining whether an IGA contract "is in proper form," the County Attorney's Office will answer any questions or concerns the public agency has about the contract. It is the responsibility of the public agency or department submitting the IGA for review to ask any specific questions or address any concerns it has about the IGA to the County Attorney's Office at the same time they submit the IGA for review. Making such an inquiry also helps improve the County Attorney's Office review of the IGA because it will help focus the review on specific issues that are of greatest concern to the public agency. Failing to make such an inquiry when the agency does have issues or concerns will decrease the ability of the County Attorney's Office to meaningfully review the IGA.

GILA COUNTY ATTORNEY

Daisy Flores

Re: County Attorney's Office "approval as to form" of contract or agreement.

To whom it may concern:

The County Attorney's Office has reviewed the contract or agreement attached to this agenda item and has determined that it is in its proper form and is within the powers and authority granted under the laws of this state to the public agency requesting the County Attorney's Office review.

Explanation of the Gila County Attorney's Office "Approval as to Form" Review

The Gila County Attorney's Office is often called upon to review contracts and other agreements between public entities represented by the County Attorney and private venders, contractors, and individuals.

In performing this review, the County Attorney's Office reviews these contracts to see that they are in "proper form" prior to their execution. "Proper form" means that the contract conforms to fundamental contract law, conforms to specific legislative requirements, and is within the powers and authority granted to the public agency. It does not mean that the County Attorney's Office approves of or supports the policy objectives contained in the contract. That approval is solely the province of the public agency through its elected body.

The public agency or department submitting the contract for review has the responsibility to read and understand the contract in order to completely understand its obligations under the contract if it is ultimately approved by the public entity's board. This is because while the County Attorney's Office can approve the contract as to form, the office may not have any idea whether the public agency has the capacity to actually comply with its contractual obligations. Also, the County Attorney's Office does not monitor contract compliance. Hence the public entity or

submitting department will need to be prepared to monitor their own compliance. A thorough knowledge of the provisions of the contract will be necessary to monitor compliance.

Before signing a contract "approved as to form," the County Attorney's Office will answer any questions or concerns the public agency has about the contract. It is the responsibility of the public agency or department submitting the contract for review to ask any specific questions or address any concerns it has about the contract to the County Attorney's Office at the same time they submit the contract for review. Making such an inquiry also helps improve the County Attorney's Office review of the contract because it will help focus the review on specific issues that are of greatest concern to the public agency. Failing to make such an inquiry when the agency does have issues or concerns will decrease the ability of the County Attorney's Office to meaningfully review the agreement.

ARF-1322 **Regular Agenda Item 3- C**

Regular BOS Meeting

Meeting Date: 08/07/2012

Submitted For:	Nancy Neumann, Administrative Clerk	Submitted By:	Nancy Neumann, Administrative Clerk, Sheriff's Office
Department:	Sheriff's Office		
Fiscal Year:	FY2013	Budgeted?:	No
Contract Dates Begin & End:	July 1, 2012-December 30, 2012	Grant?:	No
Matching Requirement?:	No	Fund?:	New

Information

Request/Subject

FY2013 Intergovernmental Agreement (A.G.Contract No. P001-2012-001854) with the Department of Public Safety.

Background Information

In the past, the $25,000 funding for the overtime of the Domestic Cannabis Eradication/Supression Program came out of the Gila County Drug Enforcement Administration (DEA) fund. The DEA, pursuant to the authority of 21 U.S.C. 873, has provided funds to the Department of Public Safety (DPS) to be administered to the Gila County Sheriff's Office in the amount of $25,000. (DPS) is authorized and enpowered to enter into this Intergovernmental Agreement (IGA) pursuant to A.R.S. 41-1713(B)(3). Both parties are authorized and empowered to enter into this IGA pursuant to A.R.S. 11-952.

The Gila County Sheriff's Office agrees to use funds provided primarily for payment of deputies'/officers' overtime no ERE while those deputies and officers are directly engaged in the cannabis eradication process, and for per diem and other direct costs related to the actual conduct of cannabis eradication. These federal funds are not intended primarily for the purchase of equipment or supplies. All purchases of the equipment and supplies must have prior written approval from DPS and must be received by DPS by October 1, 2012.

The DPS agrees to reimburse the Gila County Sheriff's Office for officers' overtime accrued while participating in marijuana eradication efforts. The annual maximum overtime reimbursement rate is basedf on the current year General Pay Scale/rest of the US and cannot exceed 25% of a GS-12, Step1; the funds shall only be used to pay the normal overtime rate, i.e. time and a half. The overtime reimbursement rate shall not include any cost for benefits, such as retirement, FICA, or other expenses.

Evaluation

FY2013 Department of Public Safety has committed to $25,000 for overtime.

Conclusion

The Gila County Sheriff's Office will utilize the funds in the amount of $25,000 to provide primarily for payment of deputies'/officers' overtime no ERE while those deputies and officers are directly engaged in the cannabis eradication procerss, and for per diem and other direct costs related to the actual conduct of cannabis eradication.

Recommendation

The Gila County Sheriff's Office requests the Gila County Board of Supervisors' approval for this Intergovernmental Agreement with the Department of Public Safety. (A.G. Contract No. P001-2012-001854/DPS Contract NO. 2012-116)

Suggested Motion

Information/Discussion/Action to approve an Intergovernmental Agreement (Contract No. A.G. P001-2012-001854) between the Arizona Department of Public Safety and the Gila County Sheriff's Office in the amount of $25,000 for the period of July 1, 2012, to December 31, 2012, in order to provide overtime pay for Sheriff's Office deputies/officers under the Domestic Cannabis Eradication/Suppression Program. **(Johnny Sanchez)**

Attachments

IGA DCESP

Legal Explanation

A. G. CONTRACT NO. P001-2012-001854 DPS CONTRACT NO. 2012-127

INTERGOVERNMENTAL AGREEMENT
REGARDING
DOMESTIC CANNABIS ERADICATION/SUPPRESSION PROGRAM

This Intergovernmental Agreement ("IGA") is entered into between the State of Arizona through its Department of Public Safety, hereinafter referred to as "**DPS**" and the Gila County Sheriff, hereinafter referred to as the "**Agency**."

There is evidence that trafficking in controlled substances exists, and that such illegal activity has a substantial and detrimental effect on the health and general welfare of the people of the State of Arizona. The parties hereto agree that it is to their mutual benefit to cooperate in locating and eradicating illicit cannabis plants and in the investigation and prosecution of those cases before the courts of the United States (U.S.) and the courts of the State of Arizona. The Drug Enforcement Administration (DEA) pursuant to the authority of 21 U.S.C. § 873, has provided funds to **DPS** to be administered to the **Agency** and the **Agency** is desirous of securing funds.

DPS is authorized and empowered to enter into this IGA pursuant to A.R.S. §41-1713(B)(3). Both parties are authorized and empowered to enter into this IGA pursuant to A.R.S. §11-952. The **Agency** is authorized and empowered pursuant to A.R.S. 11-951.

Now, in consideration of the mutual promises set forth herein, the parties to this Agreement hereby agree to the following terms and conditions:

I. PARTICIPATION

The **Agency** will, with its own law enforcement personnel and employees, taskforce personnel, or other personnel working with the agency pursuant to a mutual aid agreement, as hereinafter specified, perform the activities and duties described below:

a. Gather and report intelligence data relating to the illicit cultivation, possession, and distribution of cannabis.
b. Investigate and report instances involving the trafficking in controlled substances.
c. Provide law enforcement personnel for the eradication of illicit cannabis located within the State of Arizona.
d. Make arrests and refer to the appropriate prosecutorial authority cases for prosecution under controlled substances laws and other criminal laws.
e. Send required samples of eradicated cannabis to the National Institute on Drug Abuse (NIDA) Potency Monitoring Project.
f. **MANDATORY requirement to utilize *the Web-based DEA internet Capability Endeavor (DICE) or if applicable the Firebird based DEA Analysis/Response Tracking System (DARTS) to report all statistics and seizures per incident, to include the submission of significant items for de-***

confliction and information sharing purposes. Entries are to be made within 48 hours of the conclusion of the operation. Hardcopies of the documentation shall be provided to DPS by the 15th of each month following the respective monthly reporting period and should be submitted with any corresponding reimbursement paperwork.

g. Submit monthly expenditure reports to **DPS** utilizing provided documents.

It is understood and agreed by the parties to this Agreement that the activities described in Subparagraphs a, b, c, d, e, f, and g above shall be accomplished with existing personnel, and that the scope of the **Agency's** program with respect to those activities by such personnel shall be sole at the **Agency's** discretion.

II. REIMBURSEMENT

The **Agency** agrees to use funds provided primarily for payment of deputies'/officers' overtime while those deputies and officers are directly engaged in the cannabis eradication process, and for per diem and other direct costs related to the actual conduct of cannabis eradication. Examples of such costs includes rental of aircraft, fuel for aircraft, and minor repairs and maintenance necessitated by use to support cannabis eradication and as outlined under Category Descriptions in Agreement 2012-03 between DEA and DPS. These Federal funds are not intended primarily for the purchase of equipment or supplies. When DCE/SP funds are used to purchase supplies and equipment, those items must be directly related to the program activities. All purchases of equipment and supplies must have prior written approval from **DPS.** All requests to purchase equipment or supplies must be received by **DPS** by October 1, 2012. ***[Agency Initial*** JRA ***]***

Per the Department of Justice (DOJ), none of the funds allocated may be used to purchase promotional items, gifts, mementos, tokens of appreciation, or other similar items. These will include items justified as training aids if they are embossed, engraved or printed with the agency or program logos. Additionally, the use of the DCE/SP funds for Demand Reduction expenses is not authorized.

The **DPS** agrees to reimburse the **Agency** for officers' overtime accrued while participating in marijuana eradication efforts. ***(per DOJ policy, the annual maximum overtime reimbursement rate is based on the current year General Pay Scale / rest of the United States and cannot exceed 25% of a GS-12, Step 1; the funds shall only be used to pay the normal overtime rate, i.e. time and a half. The overtime reimbursement rate "shall not include any cost for benefits, such as retirement, FICA, or other expenses", which is specifically prohibited by DOJ).*** In order to qualify for reimbursement, an officer must be in overtime status during the time of joint enforcement efforts as defined by **Agency** policy. It is the responsibility of the **Agency** to ensure that all claims are true and accurate and that each officer was, in fact, in overtime status. All records regarding overtime claims, including officer time and accounting logs, must be retained in compliance with A.R.S.§ 35-214 (Inspection and Audit of Contract Provisions). Such claims shall be submitted to **DPS** by the 15th of each month following the respective

monthly reporting period. Monthly reporting periods begin on the first of each month and conclude on the last day of that month.

DPS shall reimburse the **Agency** for their contributions to the joint enforcement efforts. No claim shall be paid unless it is in full compliance with this Agreement and until all proper documentation has been received by **DPS** by the required reporting deadline.

Federal authorities require a report to account for all funded activities, including types of enforcement, the total number of officers involved, the total number of officers paid under this agreement and the nature of their activities while participating in marijuana eradication efforts. The **DPS** will be responsible for collecting this information and compiling all reports.

III. IMMIGRATION

Pursuant to the Governor's Executive Order 2005-30, the parties agree to comply with all applicable federal immigration laws and regulations.

IV. NONDISCRIMINATION

All parties agree to comply with the non-discrimination provisions of the Governor's Executive Order 2009-09.

V. SUDAN AND IRAN – Pursuant to A.R.S. §§ 35-391.06 and 35-393.06, both of the parties hereby warrant, and represent that they do not have, and its subcontractors do not have, and during the term hereof will not have a scrutinized business operation in either Sudan or Iran.

VI. E-VERIFY – Both parties acknowledge that immigration laws require them to register and participate with the E-Verify program (employment verification program administered by the United States Department of Homeland Security and the Social Security Administration or any successor program) as they both employ one or more employees in this state. Both parties warrant that they have registered with and participate with E-Verify. If either party later determines that the other non-compliant party has not complied with E-Verify, it shall notify the non-compliant party by certified mail of the determination and of the right to appeal the determination.

VII. INDEMNIFICATION

Each party (as "indemnitor") agrees to indemnify, defend, and hold harmless the other party (as "indemnitee") from and against any and all claims, losses, liability, costs, or expenses (including reasonable attorney's fees) (hereinafter collectively referred to as "claims") arising out of bodily injury of any person (including death) or property damage,

but only to the extent that such claims which result in vicarious/derivative liability to the indemnitee, are caused by the act, omission, negligence, misconduct, or other fault of the indemnitor, its officers, agents, employees, or volunteers.

VIII. RECORDKEEPING

All records regarding the IGA, including officer's time accounting logs, must be retained for five (5) years in compliance with A.R.S. §35-214, Inspection and Audit of Contract Provisions.

IX. FEES

In no event shall either party charge the other for any administrative fees for any work performed pursuant to the IGA.

X. JURISDICTION

The **Agency** agrees to permit its officer(s) to work outside of their regular jurisdictional boundaries.

XI. ARBITRATION

In the event of a dispute under this IGA, the parties agree to use arbitration to the extent required under A.R.S. §§ 12-1518 and 12-133.

XII. WORKER'S COMPENSATION BENEFITS

Pursuant to A.R.S. §23-1022(D), for the purposes of Worker's Compensation coverage, the **Agency** officer(s) covered by the IGA shall be deemed to be an employee of both agencies. The **Agency**, as the primary employer, shall be solely liable for payment of Worker's Compensation Benefits and the processing of any potential claims occurring during the officer's assignment.

XIII. LIMITATIONS

This Agreement in no way restricts either party from participating in similar activities with other public or private agencies, organizations, and individuals. Nothing in this Agreement shall be construed as limiting or expanding the statutory responsibilities of the parties.

XIV. EFFECTIVE DATE/DURATION

This Agreement shall become effective upon the date the last signature is obtained, and shall expire on December 31, 2012. **DPS** agrees to reimburse the **Agency**, in accordance with the terms set forth in Paragraph II, from the effective date through December 31, 2012. This agreement is automatically renewable yearly for up to five years.

XV. AVAILABILITY OF FUNDS

Every payment obligation of **DPS** under this agreement is conditioned upon the availability of funds appropriated or allocated for the payment of such obligation. If funds are not allocated and available for the continuance of the agreement, the agreement may be terminated by **DPS** at the end of the period for which funds are available. No liability shall accrue to **DPS** in the event this provision is exercised, and **DPS** shall not be obligated or liable for any future payments or for any damages as a result of termination under this paragraph.

XVI. CANCELLATION

All parties are hereby put on notice that this IGA is subject to cancellation by the Governor for conflicts of interest pursuant to A.R.S. §38-511.

XVII. TERMINATION

Either party may terminate the IGA for convenience or cause upon thirty (30) days written notice to the other party. Upon termination, DPS shall pay all outstanding amounts up through the time upon which the termination becomes effective.

Any notice required to be given under the IGA will be provided by mail to:

DPS:

Colonel Robert C. Halliday, Director
Arizona Department of Public Safety
P. O. Box 6638, Mail Drop 1340
Phoenix, Arizona 85005-6638

Agency Contact:

Sheriff John R. Armer
Gila County Sheriff's Office
PO Box 311
Globe, AZ 85502

XVIII. VALIDITY

This document contains the entire agreement between the parties and may not be modified, amended, altered or extended except through a written amendment signed by both parties. If any portion of this agreement is held to be invalid, the remaining provisions shall not be affected.

The parties hereto have caused this IGA to be executed by the proper officers and officials.

STATE OF ARIZONA

BY: _____ FOR DATE: 6/14/12
Robert C. Halliday, Director
Arizona Department of Public Safety

APPROVED AS TO FORM:

_____ DATE: 6/11/12
Assistant Attorney General

"AGENCY"

BY: _____ DATE: 6-21-12
Sheriff John R. Armer

ATTEST:

APPROVED AS TO FORM:

_____ DATE: _____
Bryan Chambers, Deputy County Attorney

_____ **DATE:** _____
Tommie C. Martin, Board of Supervisors

TOM HORNE
ATTORNEY GENERAL

OFFICE OF THE ATTORNEY GENERAL
CIVIL DIVISION / TRANSPORTATION SECTION

Brian D. Schneider
Assistant Attorney General
Direct No.: 602-542-8863

INTERGOVERNMENTAL AGREEMENT
DETERMINATION

A.G. Contract No. P001-2012-001854 **(DPS 2012-127)**, an Agreement between public agencies, i.e., Arizona Department of Public Safety and the Gila County Sheriff, has been reviewed pursuant to A.R.S. § 11-952, as amended, by the undersigned Assistant Attorney General, who has determined that it is in the proper form and is within the powers and authority granted to the State of Arizona.

No opinion is expressed as to the authority of the remaining Parties, other than the State or its agencies, to enter into said Agreement.

DATE _____, 2012.

TOM HORNE
Attorney General

_____
BRIAN D. SCHNEIDER
Assistant Attorney General

BDS:ln:2725937
Attachment

U.S. Department of Justice
Office of Justice Programs
Office of the Comptroller

CERTIFICATIONS REGARDING LOBBYING; DEBARMENT, SUSPENSION AND OTHER RESPONSIBILITY MATTERS; AND DRUG-FREE WORKPLACE REQUIREMENTS

Applicants should refer to the regulations cited below to determine the certification to which they are required to attest. Applicants should also review the instructions for certification included in the regulations before completing this form. Signature of this form provides for compliance with certification requirements under 28 CFR Part 69, "New Restrictions on Lobbying" and 28 CFR Part 67, "Government-wide Debarment and Suspension (Nonpro-curement) and Government-wide Requirements for Drug- Free Workplace (Grants)." The certifications shall be treated as a material representation of fact upon which reliance will be placed when the Department of Justice determines to award the covered transaction, grant, or cooperative agreement.

1. LOBBYING

As required by Section 1352, Title 31 of the U.S. Code, and implemented at 28 CFR Part 69, for persons entering into a grant or cooperative agreement over $100,000, as defined at 28 CFR Part 69, the applicant certifies that:

(a) No Federal appropriated funds have been paid or will be paid, by or on behalf of the undersigned, to any person for influencing or attempting to influence an officer or employee of any agency, a Member of Congress, an officer or employee of Congress, or an employee of a Member of Congress in connection with the making of any Federal grant, the entering into of any cooperative agreement, and the extension, continuation, renewal, amendment, or modification of any Federal grant or cooperative agreement;

(b) If any funds other than Federal appropriated funds have been paid or will be paid to any person for influencing or attempting to influence an officer or employee of any agency, a Member of Congress, an officer or employee of Congress, or an employee of a Member of Congress in connection with this Federal grant or cooperative agreement, the undersigned shall complete and submit Standard Form - LLL, "Disclosure of Lobbying Activities," in accordance with its instructions;

(c) The undersigned shall require that the language of this certification be included in the award documents for all subawards at all tiers (including subgrants, contracts under grants and cooperative agreements, and subcontracts) and that all sub-recipients shall certify and disclose accordingly.

2. DEBARMENT, SUSPENSION, AND OTHER RESPONSIBILITY MATTERS (DIRECT RECIPIENT)

As required by Executive Order 12549, Debarment and Suspension, and implemented at 28 CFR Part 67, for prospective participants in primary covered transactions, as defined at 28 CFR Part 67, Section 67.510--

A. The applicant certifies that it and its principals:

(a) Are not presently debarred, suspended, proposed for debarment, declared ineligible, sentenced to a denial of Federal benefits by a State or Federal court, or voluntarily excluded from covered transactions by any Federal department or agency;

(b) Have not within a three-year period preceding this application been convicted of or had a civil judgment rendered against them for commission of fraud or a criminal offense in connection with obtaining, attempting to obtain, or performing a public (Federal, State, or local) transaction or contract under a public transaction; violation of Federal or State antitrust statutes or commission of embezzlement, theft, forgery, bribery, falsification or destruction of records, making false statements, or receiving stolen property;

(c) Are not presently indicted for or otherwise criminally or civilly charged by a governmental entity (Federal, State, or local) with commission of any of the offenses enumerated in paragraph (1)(b) of this certification; and

(d) Have not within a three-year period preceding this application had one or more public transactions (Federal, State, or local) terminated for cause or default; and

B. Where the applicant is unable to certify to any of the statements in this certification, he or she shall attach an explanation to this application.

3. DRUG-FREE WORKPLACE (GRANTEES OTHER THAN INDIVIDUALS)

As required by the Drug-Free Workplace Act of 1988, and implemented at 28 CFR Part 67, Subpart F, for grantees, as defined at 28 CFR Part 67 Sections 67.615 and 67.620--

A. The applicant certifies that it will or will continue to provide a drug-free workplace by:

(a) Publishing a statement notifying employees that the unlawful manufacture, distribution, dispensing, possession, or use of a controlled substance is prohibited in the grantee's workplace and specifying the actions that will be taken against employees for violation of such prohibition;

(b) Establishing an on-going drug-free awareness program to inform employees about--

(1) The dangers of drug abuse in the workplace;

(2) The grantee's policy of maintaining a drug-free workplace;

(3) Any available drug counseling, rehabilitation, and employee assistance programs; and

(4) The penalties that may be imposed upon employees for drug abuse violations occurring in the workplace;

(c) Making it a requirement that each employee to be engaged in the performance of the grant be given a copy of the statement required by paragraph (a);

(d) Notifying the employee in the statement required by paragraph (a) that, as a condition of employment under the grant,

ASSURANCES

The Applicant hereby assures and certifies compliance with all Federal statutes, regulations, policies, guidelines and requirements, including OMB Circulars No. A-21, A-87, A-110, A-122, A-133; E.O. 12372 and Uniform Administrative Requirements for Grants and Cooperative Agreements - 28 CFR, Part 66, Common rule, that govern the application, acceptance and use of Federal funds for this federally-assisted project. Also the Applicant assures and certifies that:

1. It possesses legal authority to apply for the grant; that a resolution, motion or similar action has been duly adopted or passed as an official act of the applicant's governing body, authorizing the filing of the application, including all understandings and assurances containedtherein, and directing and authorizing the person identified as the official representative of the applicant to act in connection with the application and toprovide such additional information may be required.

2. It will comply with requirements of the provisions of the Uniform Relocation Assistance and Real Property Acquisitions Act of 1970 (P.L. 91-646) which provides for fair and equitable treatment of persons displaced as a result of Federal and federally - assisted programs.

3. It will comply with provisions of Federal law which limit certain political activities of employees of a State or local unit of government whose principal employment is in connection with an activity financed in whole or in part by Federal grants. (5 USC 1501, et seq.)

4. It will comply with the minimum wage and maximum hours provisions of the Federal Fair Labor Standards Act if applicable.

5. It will establish safeguards to prohibit employees from using their positions for a purpose that is or gives the appearance of being motivated by a desire for private gain for themselves or others, particularly those with whom they have family, business, or other ties.

6. It will give the sponsoring agency or the Comptroller General, through any authorized representative, access toand the right to examine all records, books, papers, or documents related to the grant.

7. It will comply with allrequirements imposed by the Federal sponsoring agency concerning special requirements of law, program requirements, and other administrative requirements.

8. It will insure that the facilities under its ownership, lease or supervision which shall be utilized in the accomplishment of the project are not listed on the Environmental Protection Agency's (EPA)list of Violating Facilities and that it will notify the Federal grantor agency of the receipt of any communication from the Director of the EPA Office of Federal Activities indicating that a facility to be used in the project is under consideration for listing by the EPA.

9. It will comply with the flood insurance purchase requirements of Section 102(a) of the Flood Disaster Protection Act of 1973, Public Law 93-234, 87 Stat. 975, approved December 31, 1976, Section 102(a) requires, on and after March 2, 1975, the purchase of flood insurance in communities where such insurance is available as a condition for the receipt of any Federal financial assistance for construction or acquisition purposes for usein any area that has been identified by the Secretary of the Department of Housing and Urban Development as an area having special flood hazards. The phrase "Federal financial assistance" includes any form of loan, grant, guaranty, insurancepayment, rebate, subsidy, disaster assistance loan or grant, or any other form of direct or indirect Federal assistance.

10. It will assist the Federal grantor agency in its compliance with Section 106 of the National Historic Preservation Act of 1966 as amended (16 USC 470), Executive Order 11593, and the Archeological and Historical Preservation Act of 1966 (16 USC 569 a-1 et seq.) by (a) consulting with the State Historic Preservation Officer on the conduct of investigations, as necessary, to identify properties listed in or eligible for inclusion in the National Register of Historic Places that are subject to adverse effects (see 36 CFR Part 800.8) by the activity, and notifying the Federal grantor agency of the existence of any such properties, and by (b) complying with all requirements established by the Federal grantor agency to avoid or mitigate adverse effects upon such properties.

11. It will comply, and assure the compliance of all its subgrantees and contractors, with the applicable provisions of Title I of the Omnibus Crime Control and Safe Streets Act of 1968, as amended, the Juvenile Justice and Delinquency Prevention Act, or the Victims of Crime Act, as appropriate; the provisions of the current edition of the Office of Justice Programs Financial and Administrative Guide for Grants, M7100.1; and all other applicable Federal laws, orders, circulars, or regulations.

12. It will comply with the provisions of 28 CFR applicable to grants and cooperative agreements including Part 18, Administrative Review Procedure; Part 20, Criminal Justice Information Systems; Part 22, Confidentiality of Identifiable Research and Statistical Information; Part 23, Criminal Intelligence Systems Operating Policies; Part 30, Intergove-rnmental Review of Department of Justice Programs and Activities; Part 42, Nondiscrimination/Equal Employment Opportunity Policies and Procedures; Part 61, Procedures for Implementing the National Environmental Policy Act; Part 63, Floodplain Management and Wetland Protection Procedures; and Federal laws or regulations applicable to Federal Assistance Programs.

13. It will comply, and all its contractors will comply, with the nondiscri-mination requirements of the Omnibus Crime Control and Safe Streets Act of 1968, as amended, 42 USC 3789(d), or Victims of Crime Act (as appropriate); Title VI of the Civil Rights Act of 1964, as amended; Section 504 of the Rehabilitation Act of 1973, as amended; Subtitle A, Title II of the Americans with Disabilities Act (ADA) (1990); Title IX of the Education Amendments of 1972; the Age Discrimination Act of 1975; Department of Justice Non-Discrimination Regulations, 28 CFR Part 42, Subparts C, D, E, and G; and Department of Justice regulations on disability discrimination, 28 CFR Part 35 and Part 39.

14. In the event a Federal or State court or Federal or State administrative agency makes a finding of discrimination after a due process hearing on the grounds of race, color, religion, national origin, sex, or disability against a recipient of funds, the recipient will forward a copy of the finding to the Office for Civil Rights, Office of Justice Programs.

15. It will provide an Equal Employment Opportunity Program if required to maintain one, where the application is for $500,000 or more.

16. It will comply with the provisions of the Coastal Barrier Resources Act (P.L. 97-348) dated October 19, 1982 (16 USC 3501 et seq.) which prohibits the expenditure of most new Federal funds within the units of the Coastal Barrier Resources System.

Signature John R. Armer Sheriff John R. Armer

Date 6-21-12

(1) Abide by the terms of the statement; and

(2) Notify the employer in writing of his or her conviction for a violation of a criminal drug statute occurring in the workplace no later than five calendar days after such conviction;

(e) Notifying the agency, in writing, within 10 calendar days after receiving notice under subparagraph (d)(2) from an employee or otherwise receiving actual notice of such conviction. Employers of convicted employees must provide notice, including position title, to: Department of Justice, Office of Justice Programs, ATTN: Control Desk, 810 7 th Street, N.W., Washington, D.C. 20531. Notice shall include the identification number(s) of each affected grant;

(f) Taking one of the following actions, within 30 calendar days of receiving notice under subparagraph (d)(2), with respect to any employee who is so convicted--

(1) Taking appropriate personnel action against such an employee, up to and including termination, consistent with the requirements of the Rehabilitation Act of 1973, as amended; or

(2) Requiring such employee to participate satisfactorily in a drug abuse assistance or rehabilitation program approved for such purposes by a Federal, State, or local health, law enforcement, or other appropriate agency;

(g) Making a good faith effort to continue to maintain a drug-free workplace through implementation of paragraphs (a), (b), (c), (d), (e), and (f).

B. The grantee may insert in the space provided below the site(s) for the performance of work done in connection with the specific grant:

Place of Performance (Street address, city, county, state, zip code)

_____

_____

_____

Check ____if there are workplaces on file that are not identified here.

Section 67, 630 of the regulations provides that a grantee that is a State may elect to make one certification in each Federal fiscal year. A copy of which should be included with each application for Department of Justice funding. States and State agencies may elect to use OJP Form 4061/7.

Check ____if the State has elected to complete OJP Form 4061/7.

DRUG-FREE WORKPLACE
(GRANTEES WHO ARE INDIVIDUALS)

As required by the Drug-Free Workplace Act of 1988, and implemented at 28 CFR Part 67, Subpart F, for grantees, as defined at 28 CFR Part 67; Sections 67.615 and 67.620--

A. As a condition of the grant, I certify that I will not engage in the unlawful manufacture, distribution, dispensing, possession, or use of a controlled substance in conducting any activity with the grant; and

B. If convicted of a criminal drug offense resulting from a violation occurring during the conduct of any grant activity, I will report the conviction, in writing, within 10 calendar days of the conviction, to: Department of Justice, Office of Justice

---

As the duly authorized representative of the applicant, I hereby certify that the applicant will comply with the above certifications.

1. Grantee Name and Address:
Board of Supervisors
Gila County Sheriff's Office
1100 South Street Globe, AZ 85501

2. Application Number and/or Project Name
DPS Contract # 2012-116
IGA - Domestic Cannabis Eradication/Suppression Program

3. Grantee IRS/Vendor Number

4. Typed Name and Title of Authorized Representative

John R. Armer, Sheriff

5. Signature

John R. Armer

6. Date

6-21-12

U. S. Department of Justice
Drug Enforcement Administration

DPS CONTRACT NO. 2012-116

Agreement Number 2012-03

This Letter of Agreement (LOA) is entered into between the ***ARIZONA DEPARTMENT OF PUBLIC SAFETY,*** hereinafter referred to as (***THE AGENCY),*** and the DRUG ENFORCEMENT ADMINISTRATION (DEA) OF THE UNITED STATES DEPARTMENT OF JUSTICE (DOJ), hereinafter referred to as DEA, in reference to the following:

There is evidence that trafficking in controlled substances exists, and that such illegal activity has a substantial and detrimental effect on the health and general welfare of the people of the ***State of Arizona***. The parties hereto agree that it is to their mutual benefit to cooperate in locating and eradicating illicit cannabis plants and in the investigation and prosecution of those cases before the courts of the United States (U.S.) and the courts of the ***State of Arizona***. DEA, pursuant to the authority of 21 U.S.C. § 873, proposes to provide certain necessary funds and ***THE AGENCY*** is desirous of securing funds.

NOW, therefore, in consideration of the mutual covenants hereinafter contained, the parties hereto have agreed as follows:

1. ***THE AGENCY*** will, with its own law enforcement personnel and employees, as hereinafter specified, perform the activities and duties described below:

   a. Gather and report intelligence data relating to the illicit cultivation, possession, and distribution of cannabis.
   b. Investigate and report instances involving the trafficking in controlled substances.
   c. Provide law enforcement personnel for the eradication of illicit cannabis located within the ***State of Arizona***.
   d. Make arrests and refer to the appropriate prosecutorial authority cases for prosecution under controlled substances laws and other criminal laws.
   e. Send required samples of eradicated cannabis to the National Institute on Drug Abuse (NIDA) Potency Monitoring Project.
   f. **MANDATORY requirement to utilize *the Web-based DEA internet Capability Endeavor (DICE) or if applicable the Firebird based DEA Analysis/Response Tracking System (DARTS) to report all statistics and seizures per incident, to include the submission of significant items for de-confliction and information sharing purposes.***
   g. Submit to DEA quarterly expenditure reports.

2. It is understood and agreed by the parties to this Agreement that the activities described in Sub-paragraphs a, b, c, d, e, f, and g above shall be accomplished with existing personnel, and that the scope of ***THE AGENCY's*** program with respect to those activities by such personnel shall be solely at ***THE AGENCY's*** discretion, subject to appropriate limitations contained in the budget adopted by

THE AGENCY.

3. DEA will pay to **THE AGENCY** Federal funds in the amount of **ONE HUNDRED TWENTY THOUSAND DOLLARS ($120,000.00)** for the period of JANUARY 1, 2012, to DECEMBER 31, 2012, to defray costs relating to the eradication and suppression of illicit cannabis. These Federal funds shall only be used for the eradication of illicit cannabis as provided in this agreement. ***THE AGENCY*** explicitly understands and agrees that Federal funds provided to ***THE AGENCY*** under this Agreement may not be used to defray costs relating to herbicidal eradication of cannabis without the advance written consent of DEA. These Federal funds shall not be used to fund any state, county or local program that authorizes cultivating marijuana in support of that program. While using the Federal funds provided to **THE AGENCY** under this Agreement for activities on Federal land, **THE AGENCY** agrees to notify the appropriate local office of the U.S. Department of Agriculture, (Forest Service) and the U.S. Department of the Interior (Bureau of Land Management, National Park Service, Fish and Wildlife Service, Bureau of Indian Affairs, and/or Bureau of Reclamation) of **THE AGENCY's** presence on Federal land.

4. The Federal funds provided to **THE AGENCY** are primarily intended for payment of deputies'/officers' overtime while those deputies and officers are directly engaged in the cannabis eradication process, **(per DOJ policy, the annual maximum overtime reimbursement rate is based on the current year General Pay Scale / rest of the United States and cannot exceed 25% of a GS-12, Step 1; the funds shall only be used to pay the normal overtime rate, i.e. time and a half. The overtime reimbursement rate "shall not include any cost for benefits, such as retirement, FICA, or other expenses", which is specifically prohibited by DOJ)** and for per diem and other direct costs related to the actual conduct of cannabis eradication, examples of such costs includes rental of aircraft, fuel for aircraft, and minor repairs and maintenance necessitated by use to support cannabis eradication. These Federal funds are not intended primarily for the purchase of equipment, supplies. When DCE/SP funds are used to purchase supplies and equipment, those items must be directly related to the program activities. ***[Agency Initial _____]***

All purchases of equipment and supplies must have approval from DEA. Procurement of these items is subject to the following approval authority: LOA expenditures up to $2,500 will be approved at DEA Division level. When expenditures exceed $2,500, prior to the purchase being made, the LOA must request authorization in writing, ***through*** the respective DEA Division, ***to OMS***. Requests must include manufacturer specifications and pricing of the item (including tax, if applicable) to be purchased. OMS will notify the state/local agency whether or not the purchase has been approved. Unless specifically approved in advance, expenditures for equipment should not exceed 10% of the total Federal funds awarded. Though equipment/supplies may be specifically itemized in the Operation Plan, **they are not automatically approved for purchase**. All requests for purchases must be received in HQ/OMS by October 15th. Exemptions to any of these requirements must have prior HQ/OMS approval.

Per the DOJ, none of the funds allocated to you may be used to purchase promotional items, gifts, mementos, tokens of appreciation, or other similar items. These will include items justified as training aids if they are embossed, engraved or printed with the agency or program logos. Additionally, the use of DCE/SP funds for Demand Reduction expenses is no longer authorized.

5. In compliance with Section 623 of Public Law 102-141, ***THE AGENCY*** agrees that no amount

AGENCY understands that failure to furnish an acceptable audit as determined by the cognizant Federal agency may be a basis for denial of future Federal funds and/or refunding of Federal funds and may be a basis for limiting ***THE AGENCY*** to payment by reimbursement on a cash basis.

11. ***THE AGENCY*** shall maintain complete and accurate reports, records, and accounts of all obligations and expenditures of DEA funds under this Agreement in accordance with generally accepted government accounting principles and in accordance with state laws and procedures for expending and accounting for its own funds. ***THE AGENCY*** shall further maintain its records of all obligations and expenditures of DEA funds under this Agreement in accordance with all instructions provided by DEA to facilitate on-site inspection and auditing of such records and accounts.

12. ***THE AGENCY*** shall permit and have available for examination and auditing by DEA, the U.S. Department of Justice Office of Inspector General, the Government Accountability Office, and any of their duly authorized agents and representatives, any and all investigative reports, records, documents, accounts, invoices, receipts, and expenditures relating to this Agreement. In addition, ***THE AGENCY*** will maintain all such foregoing reports and records for three years after termination of this Agreement or until after all audits and examinations are completed and resolved, whichever is longer.

13. ***THE AGENCY*** agrees that an authorized officer or employee will execute and return to the DEA Regional Contractor, the Letter of Agreement (LOA); Request for Advance or Reimbursement (SF-270); Electronic Funds Transfer Memorandum; Certifications Regarding Lobbying; Debarment, Suspension, & Other Responsibility Matters; Drug Free Workplace Requirements (OJP Form 406 1/6); and the Assurances (OJP Form 4000/3). ***THE AGENCY*** acknowledges that this Agreement will not take effect and that no Federal funds will be awarded by DEA until DEA receives the completed LOA package.

14. Employees of ***THE AGENCY*** shall at no time be considered employees of the U.S. Government or DEA for any purpose, nor will this Agreement establish an agency relationship between ***THE AGENCY*** and DEA.

15. ***THE AGENCY*** shall be responsible for the acts or omissions of ***THE AGENCY's*** personnel. ***THE AGENCY*** and ***THE AGENCY's*** employees shall not be considered as the agent of any other participating entity. Nothing herein is intended to waive or limit sovereign immunity under other federal or state statutory or constitutional authority. This Agreement creates no liability on the part of the DEA, its agents or employees, or the U.S. Government for any claims, demands, suits, liabilities, or causes of action of whatever kind and designation, and wherever located in the **State of Arizona** resulting from the DCE/SP funded by DEA.

16. ***THE AGENCY*** shall comply with Title VI of the Civil Rights Act of 1964, Section 504 of the Rehabilitation Act of 1973, the Age Discrimination Act of 1975, as amended, and all requirements imposed by or pursuant to the regulations of the U.S. Department of Justice implementing those laws, 28 C.F.R. Part 42, Subparts C, F, G, H, and I.

17. Within thirty (30) days after termination of the Agreement, ***THE AGENCY*** will prepare a October thru December (FINAL) Accounting Form and a Financial Status Report SF-425, itemizing the breakdown of final expenditures. The October thru December (FINAL) Accounting Form and

the SF-425, along with a refund check, payable to DEA for any unexpended funds which were advanced by DEA pursuant to this Agreement, will be returned to the DEA Regional Contractor by January 31st.

18. Upon submission of the October – December (FINAL) Accounting Form and Financial Status Report SF- 425 to your regional contractor for the preceding year, a copy of the general ledger and the underlying supporting documentation reflecting the expenditures for equipment in excess of $2,500, that was previously approved by OMS, and the expenses associated with the rental or leasing of vehicles or aircraft must be attached.

19. The duration of this Agreement shall be as specified in Paragraph 3. This Agreement may be terminated by either party for good cause shown after 30 day written notice to the other party. All obligations that are outstanding on the above prescribed termination date or on the date of any thirty (30) day notice of termination shall be liquidated by ***THE AGENCY*** within sixty (60) days thereof, in which event DEA will only be liable for obligations incurred by ***THE AGENCY*** during the terms of this Agreement. In no event shall ***THE AGENCY*** incur any new obligations during the period of notice of termination. ***THE AGENCY*** shall return to DEA all unexpended funds forthwith after the sixty (60) day liquidation period.

20. ***THE AGENCY*** must be registered in the Central Contractor Registration (CCR) to receive payment of Federal funds. There are two steps to registering in CCR. **First, *THE AGENCY*** must have a Data Universal Numbering System (DUNS) number. [A "+4 extension" to a DUNS number (DUNS+4) is required when there is a need for more than one bank/electronic funds transfer account for a location.] A DUNS number may be obtained via the internet (http://fedgov.dnb.com/webform) or by phone (U.S. and U.S. Virgin Islands: 1-866-705-5711; Alaska and Puerto Rico: 1-800-234-3867). **Second, *THE AGENCY*** must then register with CCR via the internet www.ccr.gov. Questions regarding the internet registration process may be directed to 1-866-606-8220 (follow the prompts for CCR). Both the DUNS number and registration in CCR are free of charge.

Note: It is THE AGENCY's responsibility to update their CCR registration annually or whenever a change occurs.

THE AGENCY's current DUNS No. is 804915221.

THE AGENCY's opportunity to enter into this Agreement with DEA and to receive the Federal funds expires on June 1, 2012.

THE ARIZONA DEPARTMENT OF PUBLIC SAFETY

By: [signature]

Title: DEP DIRECTOR Date: 5/31/12

Agency, please submit original signed LOA & associated paperwork to your DEA Regional Contractor.

[signature] 5/29/12

Assistant Attorney General
Approved as to Form

DRUG ENFORCEMENT ADMINISTRATION

By:_____ Date:_____
Special Agent in Charge
Phoenix Field Division

***SAC**, please submit original signed LOA & associated paperwork to your Fiscal Office.*

DEA DIVISIONAL FISCAL CLERK MUST INPUT INTO UFMS AND COMPLETE THE BOTTOM OF THIS SECTION

ACCOUNTING CLASSIFICATION/OBLIGATION NO.; SLA-G2/001-I:
12/12/S1R/OM/7810000/SLA-G2/001-IB/DCE/OPS

CT No._____

DP No._____

UFMS INPUT DATE:_____, BY:_____

***Fiscal**, please submit original signed LOA & associated paperwork to your DEA Regional Contractor.*

Memorandum

Subject	Date
Electronic Funds Transfer (DFN: 601-13)	May 4, 2012

To

All Domestic Cannabis Eradication/Suppression Program (DCE/SP) Participating Agencies

From L. Alan Bassham

L. Alan Bassham
Chief, Investigative Support Section

Funding for the Domestic Cannabis Eradication/Suppression Program (DCE/SP) is only available by electronic transfer. Funds will be transferred directly into the Letter of Agreement (LOA) agency bank account. In order to process electronic transfers the following information must be provided below:

Agency Name on Bank Account: State Treasurer Serving (PSA - Electronic Deposit)

Account Number: 252844498 (Checking)

Name of Bank/Financial Institution: Bank of America

Address of Bank/Financial Institution: 101 N. 1st. Ave, Phoenix, AZ 85003

Telephone Number of Bank/Financial Institution: 602-523-2196

Contact Person of Bank/Financial Institution: Aletia Ligon

Bank/Financial Institution ABA Number: 122101706

Chuck LeBlanc Acting Finance Mgr.

Authorized Agency Representative – Name & Title

Signature of Authorized Agency Representative

5-3-12
Date

(This original form and original Letter of Agreement Package must be returned to your regional contractor for processing. Please retain a copy for your records.)

REQUEST FOR ADVANCE OR REIMBURSEMENT

(See instructions on back)

OMB APPROVAL NO. 0348-004

PAGE 1 OF 2 PAGES

1. TYPE OF PAYMENT REQUESTED
a. "X" one or both boxes: [X] ADVANCE [ ] REIMBURSEMENT
b. "X" the applicable box: [ ] FINAL [ ] PARTIAL

2. BASIS OF REQUEST: [ ] CASH [ ] ACCRUAL

3. FEDERAL SPONSORING AGENCY AND ORGANIZATIONAL ELEMENT TO WHICH THIS REPORT IS SUBMITTED
DRUG ENFORCEMENT ADMINISTRATION

4. FEDERAL GRANT OR OTHER IDENTIFYING NUMBER ASSIGNED BY FEDERAL AGENCY
2012-03

5. PARTIAL PAYMENT REQUEST NUMBER FOR THIS REQUEST

6. EMPLOYER IDENTIFICATION NUMBER
86-6004791

7. RECIPIENT'S ACCOUNT NUMBER OR IDENTIFYING NUMBER

8. PERIOD COVERED BY THIS REQUEST
FROM *(month, day, year)* January 1, 2012
TO *(month, day, year)* December 31, 2012

9. RECIPIENT ORGANIZATION
Name: Arizona Department of Public Safety
Number and Street: 2102 West Encanto Blvd.
City, State and ZIP Code: Phoenix, AZ 85005

10. PAYEE *(Where check is to be sent if different than Item 9)*
Name:
Number and Street:
City, State and ZIP Code:

11. COMPUTATION OF AMOUNT OF REIMBURSEMENTS/ADVANCES REQUESTED

PROGRAMS/FUNCTIONS/ACTIVITIES	(a) Original Letter of Agreement	(b)	(c)	TOTAL
a. Total program outlays to date *(As of date)*	$ 120,000.00	$	$	$ 120,000.00
b. Less: Cumulative program income				0.00
c. Net program outlays *(Line a minus line b)*	120,000.00	0.00	0.00	120,000.00
d. Estimated net cash outlays for advance period				0.00
e. Total *(Sum of lines c & d)*	120,000.00	0.00	0.00	120,000.00
f. Non-Federal share of amount on line e				0.00
g. Federal share of amount on line e				0.00
h. Federal payments previously requested				0.00
i. Federal share now requested *(Line g minus line h)*	0.00	0.00	0.00	0.00
j. Advances required by month, when requested by Federal grantor agency for use in making prescheduled advances — 1st month				0.00
2nd month				0.00
3rd month				0.00

12. ALTERNATE COMPUTATION FOR ADVANCES ONLY

a. Estimated Federal cash outlays that will be made during period covered by the advance	$
b. Less: Estimated balance of Federal cash on hand as of beginning of advance period	
c. Amount requested *(Line a minus line b)*	$ 0.00

(Continued on Reverse)

knowledge and belief the data on the reverse are correct and that all outlays were made in accordance with the grant conditions or other agreement and that payment is due and has not been previously requested.	AUTHORIZED CERTIFYING OFFICIAL Dennis F. Young	DATE REQUEST SUBMITTED 5/31/12
	TYPED OR PRINTED NAME AND TITLE DENNIS F. YOUNG, DEP. DIRECTOR	TELEPHONE (AREA CODE, NUMBER AND EXTENSION) 602/223-2080

This space for agency use

Public reporting burden for this collection of information is estimated to average 60 minutes per response, including time for reviewing instructions, searching existing data sources, gathering and maintaining the data needed, and completing and reviewing the collection of information. Send comments regarding the burden estimate or any other aspect of this collection of information, including suggestions for reducing this burden, to the Office of Management and Budget, Paperwork Reduction Project (0348-0004), Washington, DC 20503.

PLEASE DO NOT RETURN YOUR COMPLETED FORM TO THE OFFICE OF MANAGEMENT AND BUDGET. SEND IT TO THE ADDRESS PROVIDED BY THE SPONSORING AGENCY.

INSTRUCTIONS

Please type or print legibly. Items 1, 3, 5, 9, 10, 11e, 11f, 11g, 11i, 12 and 13 are self-explanatory; specific instructions for other items are as follows:

Item	Entry
2	Indicate whether request is prepared on cash or accrued expenditure basis. All requests for advances shall be prepared on a cash basis.
4	Enter the Federal grant number, or other identifying number assigned by the Federal sponsoring agency. If the advance or reimbursement is for more than one grant or other agreement, insert N/A; then, show the aggregate amounts. On a separate sheet, list each grant or agreement number and the Federal share of outlays made against the grant or agreement.
6	Enter the employer identification number assigned by the U.S. Internal Revenue Service, or the FICE (institution) code if requested by the Federal agency.
7	This space is reserved for an account number or other identifying number that may be assigned by the recipient.
8	Enter the month, day, and year for the beginning and ending of the period covered in this request. If the request is for an advance or for both an advance and reimbursement, show the period that the advance will cover. If the request is for reimbursement, show the period for which the reimbursement is requested.
te:	The Federal sponsoring agencies have the option of requiring recipients to complete items 11 or 12, but not both. Item 12 should be used when only a minimum amount of information is needed to make an advance and outlay information contained in item 11 can be obtained in a timely manner from other reports.
1	The purpose of the vertical columns (a), (b), and (c) is to provide space for separate cost breakdowns when a project has been planned and budgeted by program, function, or activity. If additional columns are needed, use as many additional forms as needed and indicate page number in space provided in upper right; however, the summary totals of all programs, functions, or activities should be shown in the "total" column on the first page.
11a	Enter in "as of date," the month, day, and year of the ending of the accounting period to which this amount applies. Enter program outlays to date (net of refunds, rebates, and discounts), in the appropriate columns. For requests prepared on a cash basis, outlays are the sum of actual cash disbursements for goods and services, the amount of indirect expenses charged, the value of in-kind contributions applied, and the amount of cash advances and payments made to subcontractors and subrecipients. For requests prepared on an accrued expenditure basis, outlays are the sum of the actual cash disbursements, the amount of indirect expenses incurred, and the net increase (or decrease) in the amounts owed by the recipient for goods and other property received and for services performed by employees, contracts, subgrantees and other payees.
11b	Enter the cumulative cash income received to date, if requests are prepared on a cash basis. For requests prepared on an accrued expenditure basis, enter the cumulative income earned to date. Under either basis, enter only the amount applicable to program income that was required to be used for the project or program by the terms of the grant or other agreement.
11d	Only when making requests for advance payments, enter the total estimated amount of cash outlays that will be made during the period covered by the advance.
13	Complete the certification before submitting this request.

U.S. Department of Justice
Office of Justice Programs
Office of the Comptroller

CERTIFICATIONS REGARDING LOBBYING; DEBARMENT, SUSPENSION AND OTHER RESPONSIBILITY MATTERS; AND DRUG-FREE WORKPLACE REQUIREMENTS

Applicants should refer to the regulations cited below to determine the certification to which they are required to attest. Applicants should also review the instructions for certification included in the regulations before completing this form. Signature of this form provides for compliance with certification requirements under 28 CFR Part 69, "New Restrictions on Lobbying" and 28 CFR Part 67, "Government-wide Debarment and Suspension (Nonpro-curement) and Government-wide Requirements for Drug- Free Workplace (Grants)." The certifications shall be treated as a material representation of fact upon which reliance will be placed when the Department of Justice determines to award the covered transaction, grant, or cooperative agreement.

1. LOBBYING

As required by Section 1352, Title 31 of the U.S. Code, and implemented at 28 CFR Part 69, for persons entering into a grant or cooperative agreement over $100,000, as defined at 28 CFR Part 69, the applicant certifies that:

(a) No Federal appropriated funds have been paid or will be paid, by or on behalf of the undersigned, to any person for influencing or attempting to influence an officer or employee of any agency, a Member of Congress, an officer or employee of Congress, or an employee of a Member of Congress in connection with the making of any Federal grant, the entering into of any cooperative agreement, and the extension, continuation, renewal, amendment, or modification of any Federal grant or cooperative agreement;

(b) If any funds other than Federal appropriated funds have been paid or will be paid to any person for influencing or attempting to influence an officer or employee of any agency, a Member of Congress, an officer or employee of Congress, or an employee of a Member of Congress in connection with this Federal grant or cooperative agreement, the undersigned shall complete and submit Standard Form - LLL, "Disclosure of Lobbying Activities," in accordance with its instructions;

(c) The undersigned shall require that the language of this certification be included in the award documents for all subawards at all tiers (including subgrants, contracts under grants and cooperative agreements, and subcontracts) and that all sub-recipients shall certify and disclose accordingly.

2. DEBARMENT, SUSPENSION, AND OTHER RESPONSIBILITY MATTERS (DIRECT RECIPIENT)

As required by Executive Order 12549, Debarment and Suspension, and implemented at 28 CFR Part 67, for prospective participants in primary covered transactions, as defined at 28 CFR Part 67, Section 67.510--

A. The applicant certifies that it and its principals:

(a) Are not presently debarred, suspended, proposed for debarment, declared ineligible, sentenced to a denial of Federal benefits by a State or Federal court, or voluntarily excluded from covered transactions by any Federal department or agency;

(b) Have not within a three-year period preceding this application been convicted of or had a civil judgment rendered against them for commission of fraud or a criminal offense in connection with obtaining, attempting to obtain, or performing a public (Federal, State, or local) transaction or contract under a public transaction; violation of Federal or State antitrust statutes or commission of embezzlement, theft, forgery, bribery, falsification or destruction of records, making false statements, or receiving stolen property;

(c) Are not presently indicted for or otherwise criminally or civilly charged by a governmental entity (Federal, State, or local) with commission of any of the offenses enumerated in paragraph (1)(b) of this certification; and

(d) Have not within a three-year period preceding this application had one or more public transactions (Federal, State, or local) terminated for cause or default; and

B. Where the applicant is unable to certify to any of the statements in this certification, he or she shall attach an explanation to this application.

3. DRUG-FREE WORKPLACE (GRANTEES OTHER THAN INDIVIDUALS)

As required by the Drug-Free Workplace Act of 1988, and implemented at 28 CFR Part 67, Subpart F, for grantees, as defined at 28 CFR Part 67 Sections 67.615 and 67.620--

A. The applicant certifies that it will or will continue to provide a drug-free workplace by:

(a) Publishing a statement notifying employees that the unlawful manufacture, distribution, dispensing, possession, or use of a controlled substance is prohibited in the grantee's workplace and specifying the actions that will be taken against employees for violation of such prohibition;

(b) Establishing an on-going drug-free awareness program to inform employees about--

(1) The dangers of drug abuse in the workplace;

(2) The grantee's policy of maintaining a drug-free workplace;

(3) Any available drug counseling, rehabilitation, and employee assistance programs; and

(4) The penalties that may be imposed upon employees for drug abuse violations occurring in the workplace;

(c) Making it a requirement that each employee to be engaged in the performance of the grant be given a copy of the statement required by paragraph (a);

(d) Notifying the employee in the statement required by paragraph (a) that, as a condition of employment under the grant,

(1) Abide by the terms of the statement; and

(2) Notify the employer in writing of his or her conviction for a violation of a criminal drug statute occurring in the workplace no later than five calendar days after such conviction;

(e) Notifying the agency, in writing, within 10 calendar days after receiving notice under subparagraph (d)(2) from an employee or otherwise receiving actual notice of such conviction. Employers of convicted employees must provide notice, including position title, to: Department of Justice, Office of Justice Programs, ATTN: Control Desk, 810 7 th Street, N.W., Washington, D.C. 20531. Notice shall include the identification number(s) of each affected grant;

(f) Taking one of the following actions, within 30 calendar days of receiving notice under subparagraph (d)(2), with respect to any employee who is so convicted--

(1) Taking appropriate personnel action against such an employee, up to and including termination, consistent with the requirements of the Rehabilitation Act of 1973, as amended; or

(2) Requiring such employee to participate satisfactorily in a drug abuse assistance or rehabilitation program approved for such purposes by a Federal, State, or local health, law enforcement, or other appropriate agency;

(g) Making a good faith effort to continue to maintain a drug-free workplace through implementation of paragraphs (a), (b), (c), (d), (e), and (f).

B. The grantee may insert in the space provided below the site(s) for the performance of work done in connection with the specific grant:

Place of Performance (Street address, city, county, state, zip code)

_____

_____

_____

Check ____if there are workplaces on file that are not identified here.

Section 67, 630 of the regulations provides that a grantee that is a State may elect to make one certification in each Federal fiscal year. A copy of which should be included with each application for Department of Justice funding. States and State agencies may elect to use OJP Form 4061/7.

Check ____if the State has elected to complete OJP Form 4061/7.

DRUG-FREE WORKPLACE
(GRANTEES WHO ARE INDIVIDUALS)

As required by the Drug-Free Workplace Act of 1988, and implemented at 28 CFR Part 67, Subpart F, for grantees, as defined at 28 CFR Part 67; Sections 67.615 and 67.620--

A. As a condition of the grant, I certify that I will not engage in the unlawful manufacture, distribution, dispensing, possession, or use of a controlled substance in conducting any activity with the grant; and

B. If convicted of a criminal drug offense resulting from a violation occurring during the conduct of any grant activity, I will report the conviction, in writing, within 10 calendar days of the conviction, to: Department of Justice, Office of Justice

---

As the duly authorized representative of the applicant, I hereby certify that the applicant will comply with the above certifications.

.. Grantee Name and Address:

Arizona Dept. of Public Safety,2102 W. Encanto Blvd., Phoenix, AZ 85009

. Application Number and/or Project Name

2012-03

3. Grantee IRS/Vendor Number

866-00-4791

. Typed Name and Title of Authorized Representative

Robert C. Halliday, Director

Signature

Dani Filyay DEP. DIRECTOR FOR

6. Date 5/31/12

FORM 4061/6 REPLACES OJP FORMS 4061/2, 4061/3 AND 4061/4 WHICH ARE OBSOLETE.

*U.S. Government Printing Office: 1996 - 405-037/40014

ASSURANCES

The Applicant hereby assures and certifies compliance with all Federal statutes, regulations, policies, guidelines and requirements, including OMB Circulars No. A-21, A-87, A-110, A-122, A-133; E.O. 12372 and Uniform Administrative Requirements for Grants and Cooperative Agreements - 28 CFR, Part 66, Common rule, that govern the application, acceptance and use of Federal funds for this federally-assisted project. Also the Applicant assures and certifies that:

1. It possesses legal authority to apply for the grant; that a resolution, motion or similar action has been duly adopted or passed as an official act of the applicant's governing body, authorizing the filing of the application, including all understandings and assurances containedtherein, and directing and authorizing the person identified as the official representative of the applicant to act in connection with the application and toprovide such additional information may be required.

2. It will comply with requirements of the provisions of the Uniform Relocation Assistance and Real Property Acquisitions Act of 1970 (P.L. 91-646) which provides for fair and equitable treatment of persons displaced as a result of Federal and federally - assisted programs.

3. It will comply with provisions of Federal law which limit certain political activities of employees of a State or local unit of government whose principal employment is in connection with an activity financed in whole or in part by Federal grants. (5 USC 1501, et seq.)

4. It will comply with the minimum wage and maximum hours provisions of the Federal Fair Labor Standards Act if applicable.

5. It will establish safeguards to prohibit employees from using their positions for a purpose that is or gives the appearance of being motivated by a desire for private gain for themselves or others, particularly those with whom they have family, business, or other ties.

6. It will give the sponsoring agency or the Comptroller General, through any authorized representative, access toand the right to examine all records, books, papers, or documents related to the grant.

7. It will comply with all requirements imposed by the Federal sponsoring agency concerning special requirements of law, program requirements, and other administrative requirements.

8. It will insure that the facilities under its ownership, lease or supervision which shall be utilized in the accomplishment of the project are not listed on the Environmental Protection Agency's (EPA)list of Violating Facilities and that it will notify the Federal grantor agency of the receipt of any communication from the Director of the EPA Office of Federal Activities indicating that a facility to be used in the project is under consideration for listing by the EPA.

9. It will comply with the flood insurance purchase requirements of Section 102(a) of the Flood Disaster Protection Act of 1973, Public Law 93-234, 87 Stat. 975, approved December 31, 1976, Section 102(a) requires, on and after March 2, 1975, the purchase of flood insurance in communities where such insurance is available as a condition for the receipt of any Federal financial assistance for construction or acquisition purposes for usein any area that has been identified by the Secretary of the Department of Housing and Urban Development as an area having special flood hazards. The phrase "Federal financial assistance" includes any form of loan, grant, guaranty, insurancepayment, rebate, subsidy, disaster assistance loan or grant, or any other form of direct or indirect Federal assistance.

10. It will assist the Federal grantor agency in its compliance with Section 106 of the National Historic Preservation Act of 1966 as amended (16 USC 470), Executive Order 11593, and the Archeological and Historical Preservation Act of 1966 (16 USC 569 a-1 et seq.) by (a) consulting with the State Historic Preservation Officer on the conduct of investigations, as necessary, to identify properties listed in or eligible for inclusion in the National Register of Historic Places that are subject to adverse effects (see 36 CFR Part 800.8) by the activity, and notifying the Federal grantor agency of the existence of any such properties, and by (b) complying with all requirements established by the Federal grantor agency to avoid or mitigate adverse effects upon such properties.

11. It will comply, and assure the compliance of all its subgrantees and contractors, with the applicable provisions of Title I of the Omnibus Crime Control and Safe Streets Act of 1968, as amended, the Juvenile Justice and Delinquency Prevention Act, or the Victims of Crime Act, as appropriate; the provisions of the current edition of the Office of Justice Programs Financial and Administrative Guide for Grants, M7100.1; and all other applicable Federal laws, orders, circulars, or regulations.

12. It will comply with the provisions of 28 CFR applicable to grants and cooperative agreements including Part 18, Administrative Review Procedure; Part 20, Criminal Justice Information Systems; Part 22, Confidentiality of Identifiable Research and Statistical Information; Part 23, Criminal Intelligence Systems Operating Policies; Part 30, Intergove-rnmental Review of Department of Justice Programs and Activities; Part 42, Nondiscrimination/Equal Employment Opportunity Policies and Procedures; Part 61, Procedures for Implementing the National Environmental Policy Act; Part 63, Floodplain Management and Wetland Protection Procedures; and Federal laws or regulations applicable to Federal Assistance Programs.

13. It will comply, and all its contractors will comply, with the nondiscri-mination requirements of the Omnibus Crime Control and Safe Streets Act of 1968, as amended, 42 USC 3789(d), or Victims of Crime Act (as appropriate); Title VI of the Civil Rights Act of 1964, as amended; Section 504 of the Rehabilitation Act of 1973, as amended; Subtitle A, Title II of the Americans with Disabilities Act (ADA) (1990); Title IX of the Education Amendments of 1972; the Age Discrimination Act of 1975; Department of Justice Non-Discrimination Regulations, 28 CFR Part 42, Subparts C, D, E, and G; and Department of Justice regulations on disability discrimination, 28 CFR Part 35 and Part 39.

14. In the event a Federal or State court or Federal or State administrative agency makes a finding of discrimination after a due process hearing on the grounds of race, color, religion, national origin, sex, or disability against a recipient of funds, the recipient will forward a copy of the finding to the Office for Civil Rights, Office of Justice Programs.

15. It will provide an Equal Employment Opportunity Program if required to maintain one, where the application is for $500,000 or more.

16. It will comply with the provisions of the Coastal Barrier Resources Act (P.L. 97-348) dated October 19, 1982 (16 USC 3501 et seq.) which prohibits the expenditure of most new Federal funds within the units of the Coastal Barrier Resources System.

Signature

5/31/12
Date

SAMPLE

OVERTIME PAY REQUEST FORM

ACTIVITY CODE 63886

CASE NAME/OR NUMBER:

MONTH July 1-31 2012

FUNDING SOURCE: DEA

CURRENT DATE 8-6-12

INDEX CODE

COMPLETED BY: PHONE:

PAGE # 1 OF 1

BADGE	OFFICER (in Badge order)	O/T HOURS EARNED THIS CYCLE					TOTAL O/T HOURS EARNED THIS CYCLE	FOR DPS USE ONLY
		WEEK ENDING 7/6/2012 WK #1	WEEK ENDING 7/13/2012 WK #2	WEEK ENDING 7/20/2012 WK #3	WEEK ENDING 7/27/2012 #4	WEEK ENDING 7/31/2012 WK #5		
1111	Doe, John	10.00		8.00			18.00	
						GRAND TOTAL	18.00	

AGENCY/VENDOR NO/MAILCODE

Gila County SO

PO Box 311

Globe, AZ 85502

18660004440-030

APPROVED BY:

Sgt. Steve Enteman Date

Major Brian Wilcox Date

Supervisor Signature: Date

Revised 6/6/12

GILA COUNTY ATTORNEY
Daisy Flores

Re: County Attorney's Office approval of IGA pursuant to A.R.S. § 11-952(D).

To whom it may concern:

The County Attorney's Office has reviewed the Intergovernmental Agreement attached to this agenda item and has determined that it is in its "proper form" and "is within the powers and authority granted under the laws of this state to such public agency or public procurement unit" pursuant to A.R.S. § A.R.S. § 11-952(D).

Explanation of the Gila County Attorney's Office Intergovernmental Agreement (IGA) Review

A.R.S. § 11-952(D) requires that

> every agreement or contract involving any public agency or public procurement unit of this state . . . before its execution, shall be submitted to the attorney for each such public agency or public procurement unit, who shall determine whether the agreement is in proper form and is within the powers and authority granted under the laws of this state to such public agency or public procurement unit.

In performing this review, the County Attorney's Office reviews IGAs to see that they are in "proper form" prior to their execution. "Proper form" means that the contract conforms to fundamental contract law, conforms to specific legislative requirements, and is within the powers and authority granted to the public agency. It does not mean that the County Attorney's Office approves of or supports the policy objectives contained in the IGA. That approval is solely the province of the public agency through its elected body.

Likewise, this approval is not a certification that the IGA has been properly executed. Proper execution can only be determined after all the entities entering into the IGA have taken legal action to approve the IGA. There is no statutory requirement for the County Attorney's Office to certify that IGAs are properly executed.

Nonetheless, it is imperative for each public agency to ensure that each IGA is properly executed because A.R.S. § 11-952(F) requires that "[a]ppropriate action … applicable to the governing bodies of the participating agencies approving or extending the duration of the … contract shall be necessary before any such agreement, contract or extension may be filed or become effective." This can be done by ensuring that the governing body gives the public proper notice of the meeting wherein action will be taken to approve the IGA, that the item is adequately described in the agenda accompanying the notice, and that the governing body takes such action. Any questions regarding whether the IGA has been properly executed may be directed to the County Attorney's Office.

Proper execution of IGAs is important because A.R.S. § 11-952(H) provides that "[p]ayment for services under this section shall not be made unless pursuant to a fully approved written contract." Additionally, A.R.S. § 11-952(I) provides that "[a] person who authorizes payment of any monies in violation of this section is liable for the monies paid plus twenty per cent of such amount and legal interest from the date of payment."

The public agency or department submitting the IGA for review has the responsibility to read and understand the IGA in order to completely understand its obligations under the IGA if it is ultimately approved by the public entity's board. This is because while the County Attorney's Office can approve the IGA as to form, the office may not have any idea whether the public agency has the capacity to actually comply with its contractual obligations. Also, the County Attorney's Office does not monitor IGA compliance. Hence the public entity or submitting department will need to be prepared to monitor their own compliance. A thorough knowledge of the provisions of the IGA will be necessary to monitor compliance.

Before determining whether an IGA contract "is in proper form," the County Attorney's Office will answer any questions or concerns the public agency has about the contract. It is the responsibility of the public agency or department submitting the IGA for review to ask any specific questions or address any concerns it has about the IGA to the County Attorney's Office at the same time they submit the IGA for review. Making such an inquiry also helps improve the County Attorney's Office review of the IGA because it will help focus the review on specific issues that are of greatest concern to the public agency. Failing to make such an inquiry when the agency does have issues or concerns will decrease the ability of the County Attorney's Office to meaningfully review the IGA.

ARF-1379 **Regular Agenda Item 3- D**

Regular BOS Meeting

Meeting Date: 08/07/2012

Submitted For:	Joseph Heatherly, Finance Director	Submitted By:	Valrie Bejarano, Contracts Support Specialist, Finance Department
Department:	Finance Department		
Fiscal Year:	FY 2012-2013	Budgeted?:	Yes
Contract Dates Begin & End:	10-9-12 to 2-15-13	Grant?:	No
Matching Requirement?:	No	Fund?:	New

Information

Request/Subject

Request to Advertise Invitation for Bids No. 032712-1 for the Russell Road Reconstruction Project

Background Information

Besich Boulevard was built in 2009 to help reduce traffic on Russell Road and provide an additional access to the Cobre Valley Regional Medical Center. Creation of Besich Blvd. resulted in a 4-way intersection with Russell Road and Hope Lane.

Evaluation

The creation of the new intersection requires improvements to Russell Road. These improvements consist of widening Russell Road and providing turn lanes onto Besich Blvd. and Hope Lane. In addition to the roadway improvements a privacy wall will be built along the west side of Russell Rd. The wall will tie into the existing wall on Russell Rd. and terminate at the County's property line on the south side of the new Shop/Roads buildings.

Conclusion

These implementations to Russell Road will provide a safer road for the traveling public.

The Bid will be advertised in the Arizona Silverbelt on August 8 and 15, 2012, with a bid due date of August 28, 2012.

Recommendation

The Finance Director recommends that the Board of Supervisors approve the advertisement of Invitation for Bids No. 032712-1 for the Russell Road Reconstruction Project to be published for 2 consecutive weeks in the Arizona Silverbelt.

Suggested Motion

Information/Discussion/Action to authorize the advertisement of Invitation for Bids No. 032712-1 for the Russell Road Reconstruction Project.
(Joseph Heatherly)

Attachments

Request to Advertise Bid 032712-1 Russell Road Reconstruction

Invitation for Bids No. 032712-1 Russel Road Reconstruction

GILA COUNTY DEPARTMENTAL REQUEST TO ADVERTISE FOR BIDS

All departments procuring purchases in excess of $50,000 that requires advertising for bids must follow the Procurement Procedures must complete Item "I" of this form prior to such purchase. The requesting department is responsible for writing necessary specificati and routing them, including this form and completed Bid Reqeust Form to the Purchasing Department. This Form must be completed have a copy of the specifciations attached before routing begins. All Requests and Specifications will be in accordance with the Arizon Revised Statutes and the latest version of the Gila County Purchasing Policy and Procedures.

IS THIS A REQUEST FOR *Check one*	REQUEST NUMBER
Bids _____ Proposals X Qualifications _____	032712-1 *(For Procurement Use Only)*

I. DESCRIPTION: *List item(s) to be purchased, purpose, specific summary, estimated cost and funding source.*

FUNDING PROJECTS: REC_11

Fund 6510 Dept No. 341 Program 526 Location 000 Account 4500.70

SUMMARY
It is the intent of this solicitation to estblish a contract with a contractor to provide for complete construction of the Russell Road Turn Lanes and Wall Project.

Signed: Steve Stratton *Elected Official or Department Head* Date 7/19/12

II. DEPARTMENTAL INFORMATION ONLY: *Action Dates*

DATE				
Department Receipt	7-12-2012	Placed on Agenda	7-18-2012
Presented to Board	8-7-2012	Approved to Call	8-7-2012
Delivered to Paper	8-1-2012	Paper Name	Arizona Silverbelt
Advertised From	8-8-2012	To	8-15-2012
Closing Date	9-28-2012	Bid Award Date	9-18-2012
Awarded To		Pre-Bid Meeting Date	8-16-2012

III. OTHER APPROVAL: *Only as necessary*

Department Name: _____

Department Head Signature _____ Date _____

Department Name: _____

Department Head Signature _____ Date _____

IV. APPROVED FUNDING

Finance Director Signature Joyce Heater Date 7/19/12

V. LEGAL AND ADMINISTRATIVE APPROVAL *Bid packet must be completed and attached*

Signed _____ Date _____
Bryan B. Chambers, Chief Deputy County Attorney, for Daisy Flores, County Attorney

Signed _____ Date _____
Tommie C. Martin, Chairman, Board of Supervisors (Approved as to specifications and information)

GILA COUNTY
REQUEST FOR INVITATION FOR BIDS

RUSSELL ROAD
RECONSTRUCTION PROJECT

BID CALL 032712-1

BIDDER'S INFORMATION
CONTRACT DOCUMENTS AND SPECIFICATIONS

BOARD OF SUPERVISORS
Tommie C. Martin, Chairman
Shirley L. Dawson, Vice Chairman
Michael A. Pastor, Member

COUNTY MANAGER
Don E. McDaniel Jr.

PUBLIC WORKS DIRECTOR
Steve Stratton

JULY 2012

Registered Professional Engineer (Civil)
CERTIFICATE NO.
33412
JOSEPH M.
ALWIN
Date Signed 7/23/2012
ARIZONA U.S.A.
Expires 3/31/2014

GILA COUNTY
REQUEST FOR INVITATION FOR BIDS

RUSSELL ROAD
RECONSTRUCTION PROJECT

GLOBE, ARIZONA

BIDDER'S INFORMATION
CONTRACT DOCUMENTS AND SPECIFICATIONS

BID NO. 032712-1

C.L. Williams Consulting, Incorporated
621 South Hillside Lane
Pinetop, Arizona 85935
(928) 367-2248

SECTION 0I

INVITATION FOR BIDS

IFB-1

INVITATION FOR BIDS
BID CALL NO. 032712-1

Sealed bids will be received by **Gila County Procurement, 1400 East Ash St., Globe, AZ 85501,** until **11:00 A.M. Tuesday, August 28th, 2012** for the **RUSSELL ROAD RECONSTRUCTION PROJECT, GILA COUNTY, ARIZONA, BID NO. 032712-1** in strict accordance with the rules and regulations of the Gila County Procurement Code on file in the office of the Gila County Clerk of the Board, Globe, Arizona. **No bids will be accepted after 11:00 AM. The Bids will be publicly opened and read aloud at 11:00 AM, Gila County Board Hearing Room, 1400 E. Ash Street, Globe, Arizona.**

All Bids shall be made on the Invitation for Bids forms included in the Contract Documents and shall include all applicable taxes.

There is a mandatory site walk through scheduled for 10:00 A.M., Thursday, August 16th, 2012. Meeting shall be held at the Public Works Facilities Building, 725 North Rose Mofford Way, Globe, Arizona. Only those companies signed in on the walk through sign-in sheet will be permitted to bid. Plans, Specifications and Contract documents are available and may be obtained from the Purchasing Department at 1400 E. Ash Street, Globe, Arizona, Guerrero Building.

Each Bid submitted, either by hand, United States Postal Service, or other carrier, shall be sealed and plainly marked **"RUSSELL ROAD RECONSTRUCTION PROJECT, GILA COUNTY, ARIZONA BID CALL NO. 032712-1".** All Bids shall be mailed or delivered to the **Gila County Procurement, 1400 East Ash St., Globe, AZ 85501**. Gila County Procurement and Board of Supervisors of Gila County will not be responsible for those bids submitted that are not marked appropriately and/or sent to the wrong address. Prevailing clock shall be the atomic clock in the Purchasing office.

Contractors are invited to be present at the opening of bids but absence will not be considered cause for disqualification.

Contractors shall be responsible for any licenses or permits required by the regulatory agency of the State of Arizona that apply to the performance of this contract.

After the Contractor who is determined to be most Advantageous to the county has been selected through the source selection process, negotiations may be conducted for the purpose of developing a recommended Contract for Award.

The Gila County Board of Supervisors reserves the right to reject any or all bids, or to accept any bids, or to waive any informality in any bid, or to withhold the award if deemed in the best interest of Gila County.

Dates advertised in Arizona Silver Belt: August 8nd, & 15th, 2012

Signed:_____ Date: ____/____/____
Bryan B. Chambers, Chief Deputy County Attorney
***for* Daisy Flores, County Attorney**

Signed: _____ Date: ____/____/____
Tommie C. Martin, Chairman, Board of Supervisors

TABLE OF CONTENTS

GENERAL PROVISIONS

SECTION 01 1
NOTIFICATION TO BIDDERS 1

SECTION 10 3
DEFINITION OF TERMS 3

SECTION 20 9
PROPOSAL REQUIREMENTS AND CONDITIONS 9
20-03 CONTENTS OF PROPOSAL FORMS 9
20-04 ISSUANCE OF PROPOSAL FORMS 9
20-05 INTERPRETATION OF ESTIMATED PROPOSAL QUANTITIES 9
20-06 EXAMINATION OF PLANS, SPECIFICATIONS, AND SITE 9
20-07 PREPARATION OF PROPOSAL 10
20-08 IRREGULAR PROPOSALS 10
20-09 PROPOSAL GUARANTY 11
20-10 DELIVERY OF PROPOSAL 11
20-11 WITHDRAWAL OR REVISION OF PROPOSALS 11
20-12 PUBLIC OPENING OF PROPOSALS 11
20-13 DISQUALIFICATION OF BIDDERS 11
20-14 PROTESTS 12

SECTION 30 13
AWARD AND EXECUTION OF CONTRACT 13
30-01 CONSIDERATION OF PROPOSALS 13
30-02 AWARD OF CONTRACT 13
30-03 CANCELLATION OF AWARD 13
30-04 RETURN OF PROPOSAL GUARANTY 13
30-05 REQUIREMENTS OF CONTRACT BONDS 14
30-06 EXECUTION OF CONTRACT 14
30-07 APPROVAL OF CONTRACT 14
30-08 FAILURE TO EXECUTE CONTRACT 14
30-09 DISPUTE & RESOLUTION. 14

SECTION 40 16
SCOPE OF WORK 16
40-01 INTENT OF CONTRACT 16
40-02 ALTERATION OF WORK AND QUANTITIES 16
40-03 OMITTED ITEMS 16
40-04 EXTRA WORK 17
40-05 MAINTENANCE OF TRAFFIC 17
40-06 RIGHTS IN AND USE OF MATERIALS FOUND IN THE WORK 18
40-07 FINAL CLEANING UP 19

SECTION 50 ..... **20**
CONTROL OF WORK **20**
50-01 AUTHORITY OF THE OWNER'S ENGINEER 20
50-02 CONFORMITY WITH PLANS AND SPECIFICATIONS 20
50-03 COORDINATION OF CONTRACT, PLANS AND SPECIFICATIONS 21
50-04 COOPERATION OF CONTRACTOR 21
50-05 COOPERATION BETWEEN CONTRACTORS 21
50-06 CONSTRUCTION LAYOUT AND STAKES 22
50-07 AUTOMATICALLY CONTROLLED EQUIPMENT 22
50-08 AUTHORITY AND DUTIES OF INSPECTORS 22
50-09 INSPECTION OF THE WORK 22
50-10 REMOVAL OF UNACCEPTABLE AND UNAUTHORIZED WORK 23
50-11 LOAD RESTRICTIONS 24
50-12 MAINTENANCE DURING CONSTRUCTION 24
50-13 FAILURE TO MAINTAIN THE WORK 24
50-14 PARTIAL ACCEPTANCE 25
50-15 FINAL ACCEPTANCE 25
50-17 GUARANTEE OF WORK (ADDITIONAL) 26
50-18 CONSTRUCTION SCHEDULE 26
50-19 NEGOTIATIONS WITH INDIVIDUAL CONTRACTORS 26

SECTION 60 ..... **28**
CONTROL OF MATERIAL **28**
60-01 SOURCE OF SUPPLY AND QUALITY REQUIREMENTS 28
60-02 SAMPLES, TESTS, AND CITED SPECIFICATIONS 28
60-03 CERTIFICATION OF COMPLIANCE 29
60-04 PLANT INSPECTION 29
60-05 OWNER'S FIELD OFFICE AND LABORATORY 30
60-06 STORAGE OF MATERIALS 30
60-07 UNACCEPTABLE MATERIALS 30
60-08 OWNER-FURNISHED MATERIALS 30

SECTION 70 ..... **32**
LEGAL RELATIONS AND RESPONSIBILITY TO PUBLIC **32**
70-01 LAWS TO BE OBSERVED 32
70-02 PERMITS, LICENSES, AND TAXES 32
70-03 PATENTED DEVICES, MATERIALS, AND PROCESSES 32
70-04 RESTORATION OF SURFACES DISTURBED BY OTHERS 32
70-05 SANITARY, HEALTH, AND SAFETY PROVISIONS 33
70-06 PUBLIC CONVENIENCE AND SAFETY 34
70-07 BARRICADES, WARNING SIGNS AND HAZARD MARKINGS 34
70-08 PROTECTION AND RESTORATION OF PROPERTY AND LANDSCAPE 34
70-09 RESPONSIBILITY FOR DAMAGE CLAIMS 35
70-10 CONTRACTOR'S INSURANCE 35
70-11 THIRD PARTY BENEFICIARY CLAUSE 36
70-12 OPENING SECTIONS OF THE WORK TO TRAFFIC 36

70-13 CONTRACTOR'S RESPONSIBILITY FOR WORK 36
70-14 CONTRACTOR'S RESPONSIBILITY FOR UTILITY SERVICE AND FACILITIES OF OTHERS 37
70-15 FURNISHING RIGHTS-OF-WAY 38
70-16 PERSONAL LIABILITY OF PUBLIC OFFICIALS 38
70-17 NO WAIVER OF LEGAL RIGHTS 38
70-18 ENVIRONMENTAL PROTECTION 39

SECTION 80 40
PROSECUTION AND PROGRESS 40
80-01 SUBLETTING OF CONTRACT 40
80-02 NOTICE TO PROCEED 40
80-03 PROSECUTION AND PROGRESS 41
80-04 CONSTRUCTION LIMITS 41
80-05 CHARACTER OF WORKERS, METHODS AND EQUIPMENT 41
80-06 TEMPORARY SUSPENSION OF THE WORK 42
80-07 DETERMINATION AND EXTENSION OF CONTRACT TIME 43
80-08 FAILURE TO COMPLETE ON TIME 44
80-09 DEFAULT AND TERMINATION OF CONTRACT 45
80-10 TERMINATION FOR NATIONAL EMERGENCIES 46

SECTION 90 47
MEASUREMENT AND PAYMENT 47
90-01 MEASUREMENT OF QUANTITIES 47
90-02 SCOPE OF PAYMENT 50
90-03 COMPENSATION FOR ALTERED QUANTITIES 50
90-04 PAYMENT FOR OMITTED ITEMS 50
90-05 PAYMENT FOR EXTRA AND FORCE ACCOUNT WORK 51
90-06 ACCEPTANCE AND FINAL PAYMENT 52

SPECIAL PROVISIONS

PROPOSED WORK SP-1
GENERAL REQUIREMENTS SP-1
POINTS AND INSTRUCTION AND AS-BUILTS SP-1
CONSTRUCTION LIMITS SP-2
OPERATION AND TRAFFIC CONTROL PLANS SP-3
QUALITY CONTROL PLAN SP-3
SAMPLING AND TESTING SP-3
MEASUREMENT AND PAYMENT SP-4
HAUL ROUTE SP-5
DUST CONTROL SP-5
TEMPORARY CONSTRUCTION EASEMENTS SP-5
OWNER'S FIELD OFFICE SP-6
BLASTING NOTIFICATION SP-6
CONFLICTING UTILITY SYSTEMS SP-6

DISPOSAL OF REMOVED VEGETATION OR UNSUITABLE MATERIALS SP-6
ARIZONA PUBLIC SERVICE SP-7

TECHNICAL SPECIFICATIONS

201-CLEARING AND GRUBBING T-1
202-REMOVAL OF STRUCTURES AND OBSTRUCTIONS T-1
203-EARTH WORK T-2
209-FURNISH WATER SUPPLY T-2
211-FILL CONSTRUCTION T-2
301-SUBGRADE PREPARATION T-2
303-AGGREGATE SUBBASES AND AGGREGATE BASES T-3
321-ASPHALTIC CONCRETE PAVEMENT T-3
340-CONCRETE CURB, GUTTER, SIDEWALK, SIDEWALK RAMPS, DRIVEWAY AND ALLEY ENTRANCE T-5
411-ASPHALTIC CONCRETE FRICITION COURSE T-5
520-STEEL AND ALUMINUM HANDRAILS T-5
525-PNUEMATICALLY PLACED MORTAR T-5
607-ROADSIDE SIGN SUPPORTS T-6
608-SIGN PANELS T-6
621-CORRUGATED METAL PIPE AND ARCHES T-7
701-MAINTENANCE AND PROTECTION OF TRAFFIC T-7
708-PAINTED PAVEMENT MARKINGS T-7
760-COATING CORRUGATED METAL PIPE AND ARCHES T-7
810-EROSION CONTROL AND POLLUTION PREVENTION (SWPPP) T-8
901-MOBILIZATION T-9
902-CHAIN LINK FENCE T-9
909-SURVEY MARKER T-9
913-BANK PROTECTION T-9
914-WALLS AND MISCELLANEOUS STRUCTURES T-9
924-CONTRACTOR QUALITY CONTROL T-10
925-CONSTRUCTION SURVEYING AND LAYOUT AND AS-BUILT DRAWINGS T-11

CONTRACT FORMS

PROPOSAL P-1
BIDDING SCHEDULE BS-1
SURETY (BID) BOND BB-1
QUALIFICATION AND CERTIFICATION QC-1
REFERENCE LIST RL-1
AFFIDAVIT OF NON-COLLUSION ANC-1
SUBCONTRACTOR CERTIFICATION SC-1
CHECKLIST AND ADDENDA ACKNOWLEDGMENT CK-1
CONTRACT C-1
CONTRACT PERFORMANCE BOND CPB-1
LABOR AND MATERIALS BOND LMB-1
CONTRACT PERFORMANCE WARRANTY CWP-1
IRS W-9 FORM W-9

GENERAL PROVISIONS
Bid No. 032712-1

SECTION 01

NOTIFICATION TO BIDDERS

BIDDERS ARE HEREBY NOTIFIED:

1. The bidder must supply all the information required by the bidding documents or specifications. All proposals shall be made on the bid proposal forms prepared by Gila County as part of the Contract Documents. The proposal must include the following forms, **all with original signatures**, must accompany the bidders proposal:

   - Bid Proposal (pages P-1 to P-3)
   - Qualification & Certification Form (pages QC-1 to QC-2)
   - Reference List (RL1)
   - Bid Schedule (pages BS-1 to BS-6)
   - Surety (Bid) Bond (page BB-1)
   - Affidavit of Non-Collusion (page ANC-1)
   - Subcontracting Certification (page SC-1)
   - Check List & Addenda Acknowledgment (CK-1)
   - Contract (C1-C7)
   - IRS W-9 Form (W-9)

   Failure to include all required documents, all with original signatures, may invalidate the bid. Prices shall include all applicable taxes.

2. **Proposal Guaranty** -Proposals shall be accompanied by a certified check, cashier's check or bid bond for 10 percent (10%) of the total contract price bid.

3. **Delivery of Proposal** - Each bid shall be sealed and plainly marked **"Bid No. 032712-1 RUSSELL ROAD RECONSTRUCTION PROJECT"**, along with the **Offerors Name**, on the outer most envelope or label. If courier is used, bidder shall instruct the courier to deliver the package by **Tuesday, August 28th, 2012, 11:00 a.m.** on the date specified herein, to Gila County Procurement, Guerrero Complex, 1400 East Ash, Globe, Arizona 85501.

   Late proposals shall not be considered. Globe is considered a "rural" area by many express delivery carriers and thus, they do not guarantee priority delivery (next day). Offerors are encouraged to keep this in mind when arranging delivery of their proposals and are advised herein that late proposals shall be rejected and returned to the bidder regardless of reason for being late.

4. **Rejection of Bids** -The Owner reserves the right to reject any and all bids, waive all or any informalities in the bids.

5. **Plans and Specifications** -Plans, specifications and all other documents required by bidders may be obtained at the address shown below. **There will be a $10 non-refundable charge for the bid documents which will be provided to the requestor on a compact disc (CD).**

Gila County
Purchasing Department
Guerrero Building
1400 E. Ash Street, Globe, Arizona 85501

6. **Arizona Contractor's License** -**Prior to submission of bids**, bidders must have a valid Arizona Contractor's License of a type which meets all criteria and requirements to perform the work as specified in the contract documents in accordance with the **Arizona State Registrar of Contractors.**

7. **Bid Opening Information** - Information regarding the bid award will not be available until after the Gila County Board of Supervisors has issued a decision regarding the submitted project bids. This will be the only time, until bid award, this information will be revealed.

8. **Mandatory Pre-Bid Walk Through**
There is a mandatory site walk through scheduled for **10:00 A.M., Thursday, August 16th, 2012**. Meeting shall be held at the Public Works Facilities Building, 725 North Rose Mofford Way, Globe, Arizona. Only those companies signed in on the walk through sign-in sheet will be permitted to bid.

9. **Request for Clarifications**
Requests for clarification shall be made to Ms. Valrie Bejarano (vbejarano@co.gila.az.us) in writing (phone: 928-402-8612) submitted no later than **Monday, August 20th, 2012, 10:00 a.m.** A response will be issued to all plan holders no later than **Tuesday, August 21st, 2012 by 3:00 p.m.**

GENERAL PROVISIONS

SECTION 10

DEFINITION OF TERMS

Whenever the following terms are used in these specifications, in the contract, in any documents or other instruments pertaining to construction where these specifications govern, the intent and meaning shall be interpreted as follows:

10-00 M.A.G. Uniform Standard Specifications for Public Works Construction (Latest Edition and Revisions). Maricopa Association of Governments.

10-01 ACCESS ROAD. The right-of-way, the roadway and all improvements constructed thereon.

10-02 ADOT. Arizona Department of Transportation

10-03 ADOT STANDARD SPECIFICATIONS. "Arizona Department of Transportation Standard Specifications for Road and Bridge Construction, Revised Edition 2000", and all revisions.

10-04 ADVERTISEMENT. A public announcement, as required by local law, inviting bids for work to be performed and materials to be furnished.

10-05 ASTM. The American Society for Testing and Materials.

10-05a AASHTO. The American Association of State Highway and Transportation Officials.

10-06 AWARD. The acceptance, by the Owner, of the successful bidder's proposal.

10-07 BIDDER. Any individual, partnership, firm, or corporation, acting directly or through a duly authorized representative, who submits a proposal for the work contemplated.

10-08 BUILDING AREA. An area to be used, considered, or intended to be used for a building or other facilities or rights-of-way together with all buildings and facilities located thereon.

10-09 CALENDAR DAY. Every day shown on the calendar.

10-09a CERTIFIED FLAGGER. An individual who has been trained and certified by the Arizona Department of Transportation, an Arizona County or Municipal agency, the Federal Highway Administration, or the Highway agency of another state, to control traffic in a construction zone. Individuals certified outside Arizona must also exhibit familiarity with Arizona laws.

10-10 CHANGE ORDER. A written order by the Engineer or Owner to the Contractor covering changes in the plans, specifications, or proposal quantities and establishing the basis of payment and contract time adjustment, if any, for the work affected by such changes. The work, covered by a change order, shall be within the scope of the contract.

10-11 CONTRACT. The written agreement covering the work to be performed. The awarded contract shall include, but is not limited to: the Advertisement; the Contract form; the Proposal; the Performance Bond; the Payment Bond; any required insurance certificates; the Specifications; the Plans; and any addenda issued to bidders.

10-12 CONTRACT ITEM (PAY ITEM). A specific unit of work for which a price is provided in the contract. All pay items on this contract will be measured in English units.

10-13 CONTRACT TIME. The number of calendar days or working days, stated in the proposal, allowed for completion of the contract, including authorized time extensions. If a calendar date of completion is stated in the proposal, in lieu of a number of calendar or working days, the contract shall be completed by that date.

10-14 CONTRACTOR. The individual, partnership, firm, or corporation primarily liable for the acceptable performance of the work contracted and for the payment of all legal debts pertaining to the work who acts directly or through lawful agents or employees to complete the contract work.

10-15 CONTRACTOR'S ENGINEER. The Arizona Registered Professional Civil Engineer, individual, partnership, firm, or corporation, duly authorized by Contractor to be responsible for engineering supervision, quality control and certification of the Contract work.

10-15a DEPARTMENT. The term Department in the ADOT Standard Specifications and supplements references the Arizona Department of Transportation. Department shall reference OWNER for this contract work.

10-16 ENGINEER. See OWNER.

10-17 EQUIPMENT. All machinery, together with the necessary fuel and supplies for upkeep and maintenance including, but not limited to, all tools and apparatus necessary for the proper construction and acceptable completion of the work.

10-18 EXTRA WORK. An item of work not provided for in the awarded contract as previously modified by change order or supplemental agreement, but which is found by the Owner's Engineer to be necessary to complete the work within the intended scope of the contract as previously modified.

10-19 INSPECTOR. An authorized representative of the Owner's Engineer assigned to make all necessary quality assurance inspections and/or tests of the work performed or being performed, or of the materials furnished or being furnished by the Contractor.

10-20 INTENTION OF TERMS. Whenever, in these specifications or on the plans, the words "directed," "required," "permitted," "ordered," "designated," "prescribed," or words of the like import are used, it shall be understood that the direction, requirement, permission, order, designation, or prescription of the Owner's Engineer is intended; and similarly, the words, "approved," "acceptable," "satisfactory," or words of like import, shall mean approved by, or acceptable to, or satisfactory to the Owner's Engineer, subject in each case to the final determination of the Owner.

Any reference to a specific requirement of a numbered paragraph of the contract specifications or a cited standard shall be interpreted to include all general requirements of the entire section, specification item, or cited standard that may be pertinent to such specific reference.

10-21 LABORATORY. A testing laboratory as may be designated or approved by the Owner's Engineer to test construction materials and products.

10-22 LABOR AND MATERIALS BOND. The approved form of security furnished by the Contractor and his surety as a guaranty that he will pay in full all bills and accounts for materials and labor used in the construction of the work. Also known as Payment Bond.

10-23 MAJOR AND MINOR CONTRACT ITEMS. A major contract item shall be any item that is listed in the proposal, the total cost of which is equal to or greater than 10 percent of the total amount of the awarded contract. All other items shall be considered minor contract items.

10-24 MATERIALS. Any substance specified for use in the construction of the contract work.

10-24a MUTCD. The *Manual on Uniform Traffic Control Devices for Streets and Highways*, U.S. Department of Transportation, Federal Highway Administration, latest Edition.

10-25 NOTICE TO PROCEED. A written notice to the Contractor to begin the actual contract work on a previously agreed to date. If applicable, the Notice to Proceed shall state the date on which the contract time begins.

10-26 OWNER (SPONSOR). The term Owner shall mean the party of the first part or the contracting agency signatory to the contract.

10-27 OWNER'S ENGINEER. The individual, partnership, firm, or corporation duly authorized by the Owner (sponsor) to be responsible for engineering supervision of the contract work and acting directly or through an authorized representative. The Owner's Engineer is:

C.L. Williams Consulting Inc.
621 South Hillside Lane
Pinetop, Arizona 85935
(928) 367-2248

Contacts: Joseph M. Alwin, P.E. (joe@clwilliams.net)

10-28 PAVEMENT. The combined surface, base course, and sub base course, if any, considered as a single unit.

10-29 PERFORMANCE BOND. The approved form of security furnished by the Contractor and his surety as a guaranty that the Contractor will complete the work in accordance with the terms of the contract.

10-30 PLANS. The official drawings or exact reproductions, approved by the Owner's Engineer, which show the location, character, dimensions and details of the work to be done and which are to be considered as a part of the contract, supplementary to the specifications.

10-31 PROJECT. The agreed scope of work for accomplishing specific tasks.

10-32 PROPOSAL. The written offer of the bidder (when submitted on the approved proposal form) to perform the contemplated work and furnish the necessary materials in accordance with the provisions of the plans and specifications.

10-33 PROPOSAL GUARANTY. The security furnished with a proposal to guarantee that the bidder will enter into a contract if his proposal is accepted by the Owner.

10-34 SPECIFICATIONS. A part of the contract containing the written directions and requirements for completing the contract work. Standards for specifying materials or testing which are cited in the contract specifications by reference shall have the same force and effect as if included in the contract physically.

10-35 STRUCTURES. Facilities such as bridges, culverts, catch basins, inlets, retaining walls, cribbing, storm and sanitary sewer lines, water lines, underdrains, electrical ducts, manholes, handholes, lighting fixtures and bases, transformers, flexible and rigid pavements, navigational aids, buildings, vaults, and other manmade features that may be encountered in the work and not otherwise classified herein.

Definition of Terms continued...

10-36 SUBGRADE. The soil that forms the pavement foundation.

10-37 SUPERINTENDENT. The Contractor's authorized representative who is present on the work site during progress, and is authorized to receive and fulfill instructions from the Owner's Engineer, and who shall supervise and direct the construction.

10-38 SUPPLEMENTAL AGREEMENT. A written agreement between the Contractor and the Owner covering: 1) work that would increase or decrease the total dollar amount of the awarded contract, or any major contract item, by more than 25 percent, such increased or decreased work being within the scope of the originally awarded contract, or 2) work that is not within the scope of the originally awarded contract.

10-39 SURETY. The corporation, partnership, or individual, other than the Contractor, executing payment or performance bonds which are furnished to the Owner by the Contractor.

10-40 WORK. The furnishing of all labor, materials, tools, equipment and incidentals necessary or convenient to the Contractor's performance of all duties and obligations imposed by the contract, plans, and specifications.

10-41 WORK DAY, WORKING DAY. A work day shall be any day other than a legal holiday, Saturday, or Sunday on which the normal working forces of the Contractor may proceed with regular work for at least 6 hours toward completion of the contract, unless work is suspended for causes beyond the Contractor's control. Saturdays, Sundays and holidays on which the Contractor's forces engage in regular work, after obtaining written permission from the Public Works Director, or his authorized representative, which requires the presence of an inspector, will be considered and applied as working days.

10-42 WORK WEEK. A work week shall consist of forty (40) hours beginning on Sunday and ending on Saturday. Should the Contractor engage in work exceeding the forty (40) hour work week which requires the presence of an inspector, as determined by the County Public Works Director or his authorized representative, the Contractor shall reimburse the County for all overtime hours as 10-43.

10-43 OVERTIME HOURS. Any and all hours worked which are other than a normal work week as defined under 10-42. Contractor must give prior written notification to the Public Works Director or his authorized representative, for any and all overtime hours to be worked. It shall be at the Owner's discretion to provide an inspector at the worksite to ensure compliance during any and all overtime hours worked.

10-44 OVERTIME PAY. Any and all pay resulting from overtime hours worked.

Definition of Terms continued...

10-45 OWNER'S INSPECTOR'S OVERTIME PAY. Any and all pay to the Owner's Inspector for overtime hours worked resulting from the Contractor having received approval for overtime hours. The inspector's overtime pay shall be the actual monies paid by the County and shall be reimbursed by the Contractor to the County. Certified payrolls for the Owner's Inspector's Overtime will be submitted to the Contractor. The cost for the Owner's Inspector's Overtime Pay will be deducted from the Contractor's billing.

10-46 SUBSTANTIAL COMPLETION. See the ADOT Standard Specification Section 105.19

SECTION 20

PROPOSAL REQUIREMENTS AND CONDITIONS

20-03 CONTENTS OF PROPOSAL FORMS. The Owner shall furnish bidders with electronic copies of the proposal forms. All documents attached to or referenced within the proposal forms are necessary parts of the proposal.

The plans, specifications, and other documents designated in the proposal whether attached or not to the proposal are considered as a part of and included with the proposal.

20-04 ISSUANCE OF PROPOSAL FORMS. The Owner reserves the right to refuse to issue a proposal form to a prospective bidder should such bidder be in default for any of the following reasons:

(a) Failure to comply with any prequalification regulations of the Owner, if such regulations are cited, or otherwise included, in the proposal as a requirement for bidding.
(b) Failure to pay, or satisfactorily settle, all bills due for labor and materials on former contracts in force (with the Owner) at the time the Owner issues the proposal to a prospective bidder.
(c) Contractor default under previous contracts with the Owner.
(d) Unsatisfactory work on previous contracts with the Owner.

20-05 INTERPRETATION OF ESTIMATED PROPOSAL QUANTITIES. An estimate of quantities of work to be done and materials to be furnished under these specifications is given in the proposal. It is the result of careful calculations and is believed to be correct. It is given only as a basis for comparison of proposals and the award of the contract. The Owner does not expressly or by implication agree that the actual quantities involved will correspond exactly therewith; nor shall the bidder plead misunderstanding or deception because of such estimates of quantities, or of the character, location, or other conditions pertaining to the work. **Payment to the Contractor will be made only for the actual quantities of work performed or materials furnished in accordance with the plans and specifications.** It is understood that the quantities may be increased or decreased as hereinafter provided in the subsection titled ALTERATION OF WORK AND QUANTITIES of Section 40-02 without in any way invalidating the unit bid prices.

20-06 EXAMINATION OF PLANS, SPECIFICATIONS, AND SITE. The bidder is expected to carefully examine the site of the proposed work, the proposal, plans, specifications, and contract forms. He shall satisfy himself as to the character, quality, and quantities of work to be performed, materials to be furnished, and as to the requirements of the proposed contract. The submission of a proposal shall be prima facie evidence that the bidder has made such examination and is satisfied as to the conditions to be encountered in performing the work and as to the requirements of the proposed contract, plans and specifications.

If any person contemplating submitting a bid for the proposed contract is in doubt as to the true meaning of any part of the plans, specifications, or other proposed contract documents, or finds discrepancies in, or omissions from the drawings or specifications, he may submit to the Owner's Engineer a written request for an interpretation or correction thereof. The person submitting the request will be responsible for its prompt delivery. Any interpretation or correction of the contract documents will be made only by addendum duly issued and a copy of such addendum will be made or delivered to each person having received a set of such documents. The Owner will not be responsible for any other explanations or interpretations of the contract documents.

Any addenda or bulletins issued during the time of bid preparations, forming a part of the contract documents furnished the bidder for the preparation of his bid, shall be covered in the bid, and shall be made a part of the contract.

20-07 PREPARATION OF PROPOSAL The bidder shall submit his proposal on the forms furnished by the Owner. All blank spaces in the proposal forms must be correctly filled in where indicated for each and every item for which a quantity is given. The bidder shall state the price (written in ink or typed) in NUMERALS for which he proposes to do each pay item furnished in the proposal. The TOTAL AGGREGATE AMOUNT bid shall be stated in both WORDS and NUMERALS. A minimum of one (1) original and one (1) copy all with original signatures shall be submitted.

The bidder shall sign his proposal correctly and in ink. If the proposal is made by an individual, his name and mailing address must be shown. If made by a partnership, the name and mailing address of each member of the partnership must be shown. If made by a corporation, the person signing the proposal shall give the name of the state under which the laws of the corporation were chartered and the name, titles, and business address of the president, secretary, and the treasurer. Anyone signing a proposal as an agent shall file evidence of his authority to do so and that the signature is binding upon the firm or corporation.

20-08 IRREGULAR PROPOSALS. Proposals shall be considered irregular for the following reasons:

(a) If the proposal is on a form other than that furnished by the Owner, or if the Owner's form is altered, or if any part of the proposal form is detached.
(b) If there are unauthorized additions, conditional or alternate pay items, or irregularities of any kind which make the proposal incomplete, indefinite, or otherwise ambiguous.
(c) If the proposal does not contain a unit price for each pay item listed in the proposal, except in the case of authorized alternate pay items, for which the bidder is not required to furnish a unit price.
(d) If the proposal contains unit prices that are obviously unbalanced.
(e) If the proposal is not accompanied by the proposal guaranty specified by the Owner.

The Owner reserves the right to reject any irregular proposal and the right to waive technicalities if such waiver is in the best interest of the Owner and conforms to local laws and ordinances pertaining to the letting of construction contracts.

20-09 PROPOSAL GUARANTY. Each proposal shall be accompanied by a certified check, cashier's check or surety bond for ten percent (10%) of the amount of the bid included in the proposal as a guarantee that the Contractor will enter into a contract to perform the proposed work in accordance with the plans and specifications.

20-10 DELIVERY OF PROPOSAL. Each proposal submitted shall be placed in a sealed envelope plainly marked with the project number, name of project, and name and business address of the bidder on the outside. When sent by mail, preferably registered, or courier, the sealed proposal, marked as indicated above, should be enclosed in an additional envelope. No proposal will be considered unless received at the place specified in the advertisement before the time specified. Proposals received after the specified time shall be returned to the bidder unopened.

20-11 WITHDRAWAL OR REVISION OF PROPOSALS. A bidder may withdraw or revise (by withdrawal of one proposal and submission of another) a proposal provided that the bidder's request for withdrawal is received by the Owner in writing or by telegram before the time specified for receipt of bids. Revised proposals must be received at the place specified in the advertisement before the time specified for receipt of bids.

20-12 PUBLIC OPENING OF PROPOSALS. Proposals shall be opened and read publicly at the time and place specified in the advertisement. Bidders, their authorized agents, and other interested persons are invited to attend.

Proposals that have been withdrawn (by written or telegraphic request) or received after the time specified shall be returned to the bidder unopened.

This will be the only time, until bid award, this information will be revealed.

20-13 DISQUALIFICATION OF BIDDERS. A bidder shall be considered disqualified for any of the following reasons:

(a) Submitting more than one proposal from the same partnership, firm, or corporation under the same or different name.
(b) Evidence of collusion among bidders. Bidders participating in such collusion shall be disqualified as bidders for any future work of the Owner until any such participating bidder has been reinstated by the Owner as a qualified bidder.
(c) If the bidder is considered to be in "default" for any reason specified in the subsection titled ISSUANCE OF PROPOSAL FORMS of Section 20-04.
(d) Failure to submit all required official bid forms.

20-14 PROTESTS. Only other bidders who have submitted a bid for this project have the right to protest. A protest of a proposed award or of an award must be filed within ten (10) days after the bid award by the Gila County Board of Supervisors and must be sent to the Board of Supervisors. A protest must be in writing and must include:

(a) Name, address and telephone number of the protester.
(b) Signature of the protester or its representative, and evidence of authority to sign.
(c) Identification of the contract and the solicitation or contract number.
(d) Detailed statement of the legal and factual grounds of protest including copies of relevant documents.
(e) The form of relief requested.

All protests shall be sent to the attention of the Gila County Board of Supervisors, 1400 E. Ash Street, Globe, Arizona 85501

SECTION 30

AWARD AND EXECUTION OF CONTRACT

30-01 CONSIDERATION OF PROPOSALS. After the proposals are publicly opened and read, they will be compared on the basis of the summation of the products obtained by multiplying the estimated quantities shown in the proposal by the unit bid prices. If a bidder's proposal contains a discrepancy between unit bid prices written in words and unit bid prices written in numbers, the unit price written in words, unless obviously incorrect, shall govern.

Until the award of a contract is made, the Owner reserves the right to reject a bidder's proposal for any of the following reasons:

(a) If the proposal is irregular as specified in the subsection titled IRREGULAR PROPOSALS of Section 20-08.
(b) If the bidder is disqualified for any of the reasons specified in the subsection titled DISQUALIFICATION OF BIDDERS of Section 20-13.

In addition, until the award of a contract is made, the Owner reserves the right to reject any or all proposals; waive technicalities, if such waiver is in the best interest of the Owner and is in conformance with applicable state and local laws or regulations pertaining to the letting of construction contracts; advertise for new proposals; or proceed with the work otherwise. All such actions shall promote the Owner's best interests.

30-02 AWARD OF CONTRACT. The award of contract, if it is to be awarded, shall be made within sixty (60) calendar days of the date specified for publicly opening proposals, unless otherwise specified herein.

This contract will be awarded to the responsible bidder whose bid conforms to the invitation and whose bid is the most advantageous to the Owner concerning price, conformity to the specifications and other factors.

30-03 CANCELLATION OF AWARD. The Owner reserves the right to cancel the award without liability to the bidder, except return of proposal guaranty, at any time before a contract has been fully executed by all parties and is approved by the Owner in accordance with the subsection titled APPROVAL OF CONTRACT of Section 30-07.

30-04 RETURN OF PROPOSAL GUARANTY. All proposal guaranties, except those of the two (2) lowest bidders, will be returned immediately after the Owner has made a comparison of bids as hereinbefore specified in the subsection titled CONSIDERATION OF PROPOSALS of Section 30-01. Proposal guaranties of the two lowest bidders will be retained by the Owner until such time as an award is made, at which time the unsuccessful bidder's proposal guaranty will be returned as soon as the Owner receives the contract bonds as specified in the subsection titled REQUIREMENTS OF CONTRACT BONDS of Section 30-05.

30-05 REQUIREMENTS OF CONTRACT BONDS. At the time of the execution of the contract, the successful bidder shall furnish the Owner surety bond or bonds which have been fully executed by the bidder and his surety guaranteeing the performance of the work and the payment of all legal debts that may be incurred by reason of the Contractor's performance of the work. The surety and the form of the bond or bonds shall be acceptable to the Owner. Unless otherwise specified in this subsection, the surety bond or bonds shall be in a sum equal to the full amount of the contract. All bonds shall conform to the requirements of A.R.S. §34-222 and §34-223. §

30-06 EXECUTION OF CONTRACT. The successful bidder shall sign (execute) the necessary agreements for entering into the contract and return such signed contract to the Owner, along with the fully executed surety bond or bonds specified in the subsection titled REQUIREMENTS OF CONTRACT BONDS of Section 30-05, the Contractor's Statement of Insurance and an original Certificate of Insurance conforming with the requirements of Section 70-10, within 10 calendar days from the date mailed or otherwise delivered to the successful bidder. If the contract is mailed, special handling is recommended.

30-07 APPROVAL OF CONTRACT. Upon receipt of the contract and contract bond or bonds that have been executed by the successful bidder, the Owner shall complete the execution of the contract in accordance with local laws or ordinances, and return the fully executed contract to the Contractor. Delivery of the fully executed contract to the Contractor shall constitute the Owner's approval to be bound by the successful bidder's proposal and the terms of the contract. **This agreement is subject to cancellation pursuant to A.R.S. §38-511.**

30-08 FAILURE TO EXECUTE CONTRACT. Failure of the successful bidder to execute the contract as specified in the subsection titled EXECUTION OF CONTRACT of Section 30-06 and furnish an acceptable surety bond or bonds within the 10-calendar-day period specified in the subsection titled REQUIREMENTS OF CONTRACT BONDS of Section 30-05 shall be just cause for cancellation of the award and forfeiture of the proposal guaranty, not as a penalty, but as liquidation of damages to the Owner.

30-09 DISPUTE & RESOLUTION.

- **Initial Notification & Dispute of Resolution:** As required by these Specifications or any time the Contractor believes the action or decision of the County, lack of action by the County, or for some other reason will result in or necessitate the revision of the Contract, the County Engineer must be notified immediately. If within two (2) working days the identified issue has not been resolved between the Contractor and the County, the Contractor shall provide a written notice. At a minimum, the written notice shall provide a description of the nature of the issue, the time and date the problem was discovered, and if appropriate, the location of the issue. After initial written notice has been provided, the County Engineer will proceed in accordance with *MAG Uniform Standard Specifications Subsection 104.2.* In addition to proceeding in accordance with *Subsection 104.2,* the Contractor and the County must make every effort to resolve the issue identified in the initial notice. Only if the issue cannot be quickly resolved will it be necessary to proceed to the next step in accordance with *MAG Specs Subsection 110.2.2 Dispute Resolution.*

- **Process for Dispute Resolution:** If the Contractor rejects the decision of the County according to *Subsection 110.2.2(B)*, the Contractor may begin the Administration Process to resolve the dispute. All dispute resolutions shall be handled in accordance with *MAG Spec's Subsection 110.3, Administrative Process for Dispute Resolution.*

The administrative process for the resolution of disputes is sequential in nature and is composed of the following levels: Level I (County Project Manager), Level II (County Engineer, Level III (Public Works Director).

The provision set forth in *Subsection 110.2* is a contractual obligation assumed by the Contractor in executing the Contract. It is understood that the Contractor will be forever barred from recovering against the County if the Contractor fails to give notice of any act or failure to act, by the County, or the happening of any event, thing, or occurrence, in accordance with *Subsection 104.2*, Alteration of Work.

- **Dispute Review Board:** If the Dispute Review Board is utilized as prescribed in *Subsection 110.3.3*, the County Engineer shall be notified within thirty (30) days after the Level III Representative decision. The Dispute Review Board is a three (3) member board independent of the parties involved in the issue. The County and Contractor shall each select a member for this board. The third (3rd) member shall be a mutually agreed upon independent member. This Review Board must be selected within fourteen (14) calendar days after notice to the Level III Representative. Each member shall agree to impartially serve the County and Contractor. Fees and expenses of the Board Members are to be shared equally by the County and the Contractor. The Dispute Review Board shall meet within thirty (30) days of the selection of the board, unless, by mutual agreement, another date is selected. The scope of the Dispute Review Board shall be restricted and limited to the matters originally presented to the Level III Representative for decision or determination and shall include no other matters. The Board shall consider and evaluate the dispute and render a written decision that assigns financial responsibilities and allocates adjustments in the contact time, if applicable, within seven (7) calendar days after the meeting. The decision of the Dispute Review Board will be final.

SECTION 40

SCOPE OF WORK

40-01 INTENT OF CONTRACT. The intent of the contract is to provide for construction and completion, in every detail, of the work described. It is further intended that the Contractor shall furnish all labor, materials, equipment, tools, and supplies required to complete the work in accordance with the plans, specifications, and terms of the contract.

40-02 ALTERATION OF WORK AND QUANTITIES. The Owner reserves and shall have the right to make such alterations in the work as may be necessary or desirable to complete the work originally intended in an acceptable manner. Unless otherwise specified herein, the Owner's Engineer shall be and is hereby authorized to make such alterations in the work as may increase or decrease the originally awarded contract quantities, provided that the aggregate of such alterations does not change the total contract cost or the total cost of any major contract item by more than twenty-five percent (25%) (total cost being based on the unit prices and estimated quantities in the awarded contract). Alterations which do not exceed the twenty-five percent (25%) limitation shall not invalidate the contract nor release the surety, and the Contractor agrees to accept payment for such alterations as if the altered work had been a part of the original contract. These alterations which are for work within the general scope of the contract shall be covered by "Change Orders" issued by the Owner's Engineer. Change order for altered work shall include extensions of contract time where, in the Owner's Engineer's opinion, such extensions are commensurate with the amount and difficulty of added work.

Should the aggregate amount of altered work exceed the twenty-five percent (25%) limitation hereinbefore specified, such excess altered work shall be covered by supplemental agreement. If the Owner and the Contractor are unable to agree on a unit adjustment for any contract item that requires a supplemental agreement, the Owner reserves the right to terminate the contract with respect to the item and make other arrangements for its completion.

All supplemental agreements shall require consent of the Contractor's surety and separate performance and payment bonds.

40-03 OMITTED ITEMS. The Owner's Engineer may, in the Owner's best interest, omit from the work any contract item, except major contract items. Major contract items may be omitted by a supplemental agreement. Such omission of contract items shall not invalidate any other contract provision or requirement.

Should a contract item be omitted or otherwise ordered to be non-performed, the Contractor shall be paid for all work performed toward completion of such item prior to the date of the order to omit such item. Payment for work performed shall be in accordance with the subsection titled PAYMENT FOR OMITTED ITEMS of Section 90-04.

40-04 EXTRA WORK. Should acceptable completion of the contract require the Contractor to perform an item of work for which no basis of payment has been provided in the original contract or previously issued change orders or supplemental agreements, the same shall be called EXTRA WORK. Extra work that is within the general scope of the contract shall be covered by written change order. Change orders for such extra work shall contain agreed unit prices for performing the change order work in accordance with the requirements specified in the order, and shall contain any adjustment to the contract time that, in the Owner's Engineer's opinion, is necessary for completion of such extra work.

When determined by the Owner's Engineer to be in the Owner's best interest, he may order the Contractor to proceed with extra work by force account as provided in the subsection titled PAYMENT FOR EXTRA AND FORCE ACCOUNT WORK of Section 90-05.

Extra work that is necessary for acceptable completion of the project, but is not within the general scope of the work covered by the original contract, shall be covered by an agreement as hereinbefore defined in the subsection titled SUPPLEMENTAL AGREEMENT of Section 10-38.

Any claim for payment of extra work that is not covered by written agreement (change order or supplemental agreement) shall be rejected by the Owner.

40-05 MAINTENANCE OF TRAFFIC. It is the explicit intention of the contract that the safety of all traffic, vehicular and pedestrian, as well as the Contractor's equipment and personnel, is the most important consideration.

With respect to his own operations and the operations of all his subcontractors, the Contractor shall provide marking, lighting, and other acceptable means of identifying personnel, equipment, vehicles, storage areas, and any work area or condition that may be hazardous to the operation of all traffic, vehicular and pedestrian.

When the contract requires the maintenance of vehicular traffic on an existing road, street, or highway during the Contractor's performance of work that is otherwise provided for in the contract, plans, and specifications, the Contractor shall keep such road, street, or highway open to all traffic and shall provide such maintenance as may be required to accommodate traffic. The Contractor shall furnish, erect, and maintain barricades, warning signs, flaggers, and other traffic control devices in reasonable conformity with the Manual of Uniform Traffic Control Devices for Streets and Highways (MUTCD) PART VI, (published by the United States Government Printing Office), unless otherwise specified herein. The Contractor shall also construct and maintain in a safe condition any temporary connections necessary for ingress to and egress from abutting property or intersecting roads, streets or highways. Unless otherwise specified herein, the Contractor will not be required to furnish snow removal for such existing road, street, or highway.

The Contractor shall make his own estimate of all labor, materials, equipment, and incidentals necessary for providing the maintenance of pedestrian and vehicular traffic as specified in this subsection.

40-06 RIGHTS IN AND USE OF MATERIALS FOUND IN THE WORK. Should the Contractor encounter any materials such as (but not restricted to) sand, stone, gravel, slag, or concrete slabs within the established lines, grades, or grading sections, the use of which is intended by the terms of the contract to be either embankment or waste, he may at his option either:

(a) Use such material in another contract item, providing such use is approved by the Owner's Engineer and is in conformance with the contract specifications applicable to such use; or,
(b) Remove such material from the site, upon written approval of the Owner's Engineer; or,
(c) Use such material for his own temporary construction on site; or,
(d) Use such material as intended by the terms of the contract.

Should the Contractor wish to exercise option (a), (b), or (c), he shall request the Owner's Engineer's approval in advance of such use. Should the Owner's Engineer approve the Contractor's request to exercise option (a), (b), or (c), the Contractor shall be paid for the excavation or removal of such material at the applicable contract price. The Contractor shall replace, at his own expense, such removed or excavated material with an agreed equal volume of material that is acceptable for use in constructing embankment, backfills, or otherwise to the extent that such replacement material is needed to complete the contract work. The Contractor shall not be charged for his use of such material so used in the work or removed from the site.

Should the Owner's Engineer approve the Contractor's exercise of option (a), the Contractor shall be paid, at the applicable contract price, for furnishing and installing such material in accordance with requirements of the contract item in which the material is used.

It is understood and agreed that the Contractor shall make no claim for delays by reason of his exercise of option (a), (b), or (c).

The Contractor shall not excavate, remove, or otherwise disturb any materials, structure, or part of a structure which is located outside the lines, grades, or grading sections established for the work, except where such excavation or removal is provided for in the contract, plans, or specifications.

40-07 FINAL CLEANING UP. Upon completion of the work and before acceptance and final payment will be made, the Contractor shall remove from the site all machinery, equipment, surplus and discarded materials, rubbish, temporary structures, and stumps or portions of trees. He shall cut all brush and woods within the limits indicated and shall leave the site in a neat and presentable condition. Material cleared from the site and deposited on adjacent property will not be considered as having been disposed of satisfactorily, unless the Contractor has obtained the written permission of such property owner and furnished a copy to the Owner's Engineer.

SECTION 50

CONTROL OF WORK

50-01 AUTHORITY OF THE OWNER'S ENGINEER. The Owner shall decide any and all questions which may arise as to the quality and acceptability of materials furnished, based upon the Contractor's Engineer's certification for the quality and acceptability work performed, and as to the manner of performance and rate of progress of the work. He shall decide all questions which may arise as to the interpretation of the specifications or plans relating to the work, the fulfillment of the contract on the part of the Contractor, and the rights of different contractors on the project. The Owner shall review and determine, based upon the Contractor's Engineer's certifications on amounts, quality of work and materials furnished, the amount and quality of the several kinds of work performed and materials furnished which are to be paid for under contract.

50-02 CONFORMITY WITH PLANS AND SPECIFICATIONS. All work and materials furnished shall be the full responsibility of the Contractor and shall be in reasonably close conformity with the lines, grades, grading section, cross sections, dimensions, material requirements, and testing requirements that are specified (including specified tolerances) in the contract, plans, or specifications, and shall be certified by the Contractor's Engineer.

If the Owner finds the materials furnished, work performed, or the finished product not within reasonably close conformity with the plans and specifications, but that the portion of the work affected will, in his opinion, result in a finished product having a level of safety, economy, durability and workmanship acceptable to the Owner, he will advise the Owner of his determination that the affected work be accepted and remain in place. In this event, the Owner will document his determination and recommend to the Owner a basis of acceptance which will provide for an adjustment in the contract price for the affected portion of the work. The Owner's determination and recommended contract price adjustments will be based on good engineering judgment and on such tests or retests by the Contractor's Engineer, and at the Contractor's expense, of the affected work as are, in his opinion, needed. Changes in the contract price shall be covered by contract modifications (change order or supplemental agreement) as applicable.

If the Owner finds the materials furnished, work performed, or the finished product are not in reasonably close conformity with the plans and specifications and have resulted in an unacceptable finished product, the affected work or materials shall be removed and replaced or otherwise corrected by and at the expense of the Contractor in accordance with the Owner written orders.

For the purpose of this subsection, the term "reasonably close conformity" shall not be construed as waiving the Contractor's responsibility to complete the work in accordance with the contract, plans and specifications. The terms shall not be construed as waiving the Owner's right to insist on strict compliance with the requirements of the contract, plans, and specifications during the Contractor's prosecution of the work, when, in the Owner's opinion, such compliance is essential to provide an acceptable finished portion of the work.

For the purpose of this subsection, the term "reasonably close conformity" is also intended to provide the Owner with the authority to use good engineering judgment in his determinations as to acceptance of work that is not in strict conformity but will provide a finished product equal to or better than that intended by the requirements of the contract, plans and specifications.

50-03 COORDINATION OF CONTRACT, PLANS AND SPECIFICATIONS. The contract, plans, specifications, and all referenced standards cited are essential parts of the contract requirements. A requirement occurring in one is as binding as though occurring in all. They are intended to be complementary and to describe and provide for a complete work. In case of discrepancy, calculated dimensions will govern over scaled dimensions; contract technical specifications shall govern over contract general provisions, plans, cited standards for materials or testing; contract general provisions shall govern over plans, cited standards for materials or testing; plans shall govern over County standards for materials or testing.

The Contractor shall not take advantage of any apparent error or omission on the plans or specifications. In the event the Contractor discovers any apparent error or discrepancy, he shall immediately call upon the Owner for his interpretation and decision, and such decision shall be final.

50-04 COOPERATION OF CONTRACTOR. The Contractor will be supplied with two copies each of the plans and specifications. He shall have available on the job at all times one copy each of the plans and specifications. Additional copies of plans and specifications may be obtained by the Contractor for the cost of reproduction.

The Contractor shall give constant attention to the work to facilitate the progress thereof, and he shall cooperate with the Owner and his inspectors and with other contractors in every way possible. The Owner shall allocate the work and designate the sequence of construction in case of controversy between contractors. The Contractor shall have a competent superintendent on the job at all times who is fully authorized as his agent for the work. The superintendent shall be capable of reading and thoroughly understanding the plans and specifications and shall receive and fulfill instructions from the Owner or his authorized representative.

50-05 COOPERATION BETWEEN CONTRACTORS. The Owner reserves the right to contract for and perform other or additional work on or near the work covered by this contract.

When separate contracts are let within the limits of any one project, each contractor shall conduct his work so as not to interfere with or hinder the progress of completion of the work being performed by other contractors. Contractors working on the same project shall cooperate with each other as directed.

Each contractor involved shall assume all liability, financial or otherwise, in connection with his contract and shall protect and save harmless the Owner from any and all damages or claims that may arise because of inconvenience, delays, or loss experienced by him because of the presence and operations of other contractors working within the limits of the same project.

The Contractor shall arrange his work and shall place and dispose of the materials being used so as not to interfere with the operations of the other contractors within the limits of the same project. He shall join his work with that of the others in an acceptable manner and shall perform it in proper sequence to that of the others.

50-06 CONSTRUCTION LAYOUT AND STAKES. The Contractor and the Contractor's Engineer will establish lines, grades, and measurements necessary to the proper prosecution and control of the work contracted for under these specifications. The Contractor shall satisfy himself as to the accuracy of all measurements before constructing any permanent structure. Any question raised relative to the accuracy of construction shall not be raised unless all survey stakes remain intact. Should such stakes not be present and verified as to their origin, no claim for addition compensation for correction shall be submitted for payment and such shall be corrected by the Contractor at his expense.

50-07 AUTOMATICALLY CONTROLLED EQUIPMENT. Whenever batching or mixing plant equipment is required to be operated automatically under the contract and a breakdown or malfunction of the automatic controls occurs, the equipment may be operated manually or by other methods for a period of 48 hours following the breakdown or malfunction, provided this method of operations will produce results which conform to all other requirements of the contract.

50-08 AUTHORITY AND DUTIES OF INSPECTORS. Inspectors employed by the Owner shall be authorized to inspect all work done and all material furnished. Such inspection may extend to all or any part of the work and to the preparation, fabrication, or manufacture of the materials to be used. Inspectors are not authorized to revoke, alter, or waive any provision of the contract. Inspectors are not authorized to issue instructions contrary to the plans and specifications or to act as foreman for the Contractor.

Inspectors employed by the Owner are authorized to notify the Contractor or his representative of any failure of the work or materials to conform to the requirements of the contract, plans, or specifications and to reject such nonconforming materials in question until such issues can be referred to the Owner's Engineer for his decision.

50-09 INSPECTION OF THE WORK. All materials and each part or detail of the work shall be subject to inspection by the Owner. The Owner shall be allowed access to all parts of the work and shall be furnished with such information and assistance by the Contractor as is required to make a complete and detailed inspection.

If the Owner requests it, the Contractor, at any time before acceptance of the work, shall remove or uncover such portions of the finished work as may be directed. After examination, the Contractor shall restore said portions of the work to the standard required by the specifications. Should the work thus exposed or examined prove acceptable, the uncovering, or removing and the replacing of the covering or making good of the parts removed will be paid for as extra work; but should the work so exposed or examined prove unacceptable, the uncovering, or removing, and the replacing of the covering or making good of the parts removed will be at the Contractor's expense.

Any work done or materials used without supervision or inspection by an authorized representative of the Owner may be ordered removed and replaced at the Contractor's expense unless the Owner's representative failed to inspect after having been given reasonable notice in writing that the work was to be performed.

Should the contract work include relocation, adjustment, or any other modification to existing facilities, not the property of the (contract) Owner, authorized representatives of the owners of such facilities shall have the right to inspect such work. Such inspection shall in no way make any facility owner a party to the contract, and shall in no way interfere with the rights of the parties to this contract.

50-10 REMOVAL OF UNACCEPTABLE AND UNAUTHORIZED WORK. All work which does not conform to the requirements of the contract, plans, and specifications will be considered unacceptable, unless otherwise determined acceptable by the Owner as provided in the subsection titled CONFORMITY WITH PLANS AND SPECIFICATIONS of Section 50-02.

Unacceptable work, whether the result of poor workmanship, use of defective materials, damage through carelessness, or any other cause found to exist prior to the final acceptance of the work, shall be removed immediately and replaced in an acceptable manner in accordance with the provisions of the subsection titled CONTRACTOR'S RESPONSIBILITY FOR WORK of Section 70-13.

No work shall be done without lines and grades having been given by the Contractor's Engineer and authorized by the Owner. Work done contrary to the instructions of the Owner, work done beyond the lines shown on the plans or as given, except as herein specified, or any extra work done without authority will be considered as unauthorized and will not be paid for under the provisions of the contract. Work so done may be ordered removed or replaced at the Contractor's expense.

Upon failure on the part of the Contractor to comply as soon as possible with any order of the Owner made under the provisions of this subsection, the Owner will have authority to cause unacceptable work to be remedied or removed and replaced and unauthorized work to be removed and to deduct the costs (incurred by the Owner) from any monies due or to become due the Contractor.

50-11 LOAD RESTRICTIONS. The Contractor shall comply with all legal load restrictions in the hauling of materials on public roads beyond the limits of the work. A special permit will not relieve the Contractor of liability for damage that may result from the moving of material or equipment.

The operation of equipment of such weight or so loaded as to cause damage to structures or to any other type of construction will not be permitted. Hauling of materials over the base course or surface course under construction shall be limited as directed. No loads will be permitted on a concrete pavement, base, or structure before the expiration of the curing period. The Contractor shall be responsible for all damage done by his hauling equipment and shall correct such damage at this own expense.

50-12 MAINTENANCE DURING CONSTRUCTION. The Contractor shall maintain the work during construction and until the work is accepted. This maintenance shall constitute continuous and effective work prosecuted day by day, with adequate equipment and forces so that the work is maintained in satisfactory condition at all times.

In the case of a contract for the placing of a course upon a course or subgrade previously constructed, the Contractor shall maintain the previous course or subgrade during all construction operations.

All costs of maintenance work during construction and before the project is accepted shall be included in the unit prices bid on the various contract items, and the Contractor will not be paid an additional amount for such work.

50-13 FAILURE TO MAINTAIN THE WORK. Should the Contractor at any time fail to maintain the work as provided in the subsection titled MAINTENANCE DURING CONSTRUCTION of Section 50-12, the Owner shall immediately notify the Contractor of such noncompliance. Such notification shall specify a reasonable time within which the Contractor shall be required to remedy such unsatisfactory maintenance conditions. The time specified will give due consideration to the emergency that exists.

Should the Contractor fail to respond to the Owner notification, the Owner may suspend any work necessary for the Owner to correct such unsatisfactory maintenance condition, depending on the emergency that exists. Any maintenance cost incurred by the Owner shall be deducted from monies due or to become due the Contractor.

50-14 PARTIAL ACCEPTANCE. If at any time during the prosecution of the project the Contractor substantially completes a usable unit or portion of the work, the occupancy of which will benefit the Owner, he may request the Owner to make final inspection of that unit. If the Owner finds upon inspection that the unit has been satisfactorily completed in compliance with the contract, and certified to be in compliance by the Contractor's Engineer, he may accept it as being completed, and the Contractor may be relieved of further responsibility for that unit, subject to stated guarantees. Such partial acceptance and beneficial occupancy by the Owner shall not void or alter any provision of the contract.

50-15 FINAL ACCEPTANCE. Upon due notice from the Contractor of presumptive completion of the entire project, and certification of completion and compliance to the approved plans by the Contractor's Engineer, Owner will make an inspection. If all construction provided for and contemplated by the contract is found to be completed in accordance with the contract, plans, and specifications, such inspection shall constitute the final inspection. The Owner shall notify the Contractor in writing of final acceptance as of the date of the final inspection.

If, however, the inspection discloses any work, in whole or in part, as being unsatisfactory, the Owner will give the Contractor the necessary instructions for correction of same, and the Contractor shall immediately comply with and execute such instructions. Upon correction of the work, and recertification by the Contractor's Engineer, another inspection will be made which shall constitute the final inspection, provided the work has been satisfactorily completed. In such event, the Owner will make the final acceptance and notify the Contractor in writing of this acceptance as of the date of final inspection.

50-16 CLAIMS FOR ADJUSTMENT AND DISPUTES. If for any reason the Contractor deems that additional compensation is due him for work or materials not clearly provided for in the contract, plans, or specifications or previously authorized as extra work, he shall notify the Owner in writing of his intention to claim such additional compensation before he begins the work on which he bases the claim. If such notification is not given or the Owner is not afforded proper opportunity by the Contractor for keeping strict account of actual cost as required, then the Contractor hereby agrees to waive any claim for such additional compensation. Such notice by the Contractor and the fact that the Owner has kept account of the cost of the work shall not in any way be construed as proving or substantiating the validity of the claim. When the work on which the claim for additional compensation is based has been completed, the Contractor shall, within 10 calendar days, submit his written claim, along with certification by the Contractor's Engineer, to the Owner for consideration in accordance with local laws or ordinances.

Nothing in this subsection shall be construed as a waiver of the Contractor's right to dispute final payment based on differences in measurements or computations.

50-17 GUARANTEE OF WORK (ADDITIONAL). The Contractor shall guarantee all work against any defects due to faulty materials or workmanship for a period of two years from the date of final inspection and acceptance. The Owner shall give notice of observed defects with reasonable promptness. Any omission on the part of the Owner to condemn defective work at the time of construction or final inspection shall not be deemed an acceptance. The Contractor shall be required to correct defective work or material at any time before final inspection and acceptance and within two years thereafter.

50-18 CONSTRUCTION SCHEDULE. Prior to commencement of the work the Contractor shall prepare and submit to the Owner for review, a written schedule covering the general sequence of the work to be performed on a bi-weekly basis. The work schedule, after review and acceptance by the Owner, shall not be changed without the written consent of the Owner. The Contractor shall assume the full responsibility for performing the work in an orderly procedure under the Contract.

50-19 NEGOTIATIONS. It is the intent of the County to award a Contract to the lowest responsible Bidder provided the Bid has been submitted in accordance with the requirements of the Bid Documents, is judged reasonable, and does not exceed the funds available.

(a) The County shall have the authority to negotiate with the lowest bidder to reduce the scope of the Project in the event that all responsive bids exceed the Project budget.

Bids shall be made available for public inspection by appointment only after the award has been made by the Board of Supervisors. The Board of Supervisors has the sole authority to award bids and any statement by any employee of the County is not binding on the Board.

The following criteria will be considered a part of the evaluation process:

(a) Competence and responsibility of Bidder.
(b) Qualifications and experience of Bidder.
(c) Past performance of Bidder.
(d) Conformity with bidding requirements and general considerations.
(e) Record of timely completion of punch lists on past projects.

Negotiations With Individual Contractors: Gila County Public Works Division shall establish procedures and schedules for conducting Negotiations. Disclosure of one (1) Contractor's Price or any information derived from competing Bid Prices or any information derived from competing Bids is prohibited.

(a) Any response to a request for clarification of a bid shall be in writing.
(b) The Public Works Division shall keep a record of all negotiations.

For the purpose of conducting Negotiations with Contractors, Gila County may use any of the following methods that, in their judgment, best meets the unique requirements.

(a) Concurrent Negotiations: Negotiations may be conducted concurrently with responsible Contractors for the purpose of determining source selection and/or Contract Award.

(b) Exclusive Negotiations: A determination may be made by the Public Works Director to enter into exclusive negotiations with the responsible Contractor whose bid is determined in the selection process to be the most Advantageous to Gila County.

Exclusive Negotiations may be conducted subsequent to concurrent Negotiations or may be conducted without requiring previous concurrent Negotiations.

(a) A determination to conduct exclusive Negotiations shall not constitute a Contract Award nor shall it confer any property rights to the successful bidder.

(b) If exclusive Negotiations are conducted and an agreement is not reached, the County may enter into exclusive Negotiations with the next highest ranked Contractor without the need to repeat the formal Solicitation process.

SECTION 60

CONTROL OF MATERIAL

60-01 SOURCE OF SUPPLY AND QUALITY REQUIREMENTS. The materials used on the work shall conform to the requirements of the contract, plans, and specifications. Unless otherwise specified, such materials that are manufactured or processed shall be new (as compared to used or reprocessed).

In order to expedite the inspection and testing of materials, the Contractor's Engineer shall furnish complete statements to the Owner as to the origin, composition, and manufacture of all materials to be used in the work. Such statements shall be furnished promptly after execution of the contract but, in all cases, prior to delivery of such materials.

At the Owner's option, materials may be approved at the source of supply before delivery is started. If it is found after trial that sources of supply for previously approved materials do not produce specified products, the Contractor shall furnish materials from other sources.

It shall be the responsibility of the Contractor to provide sources of aggregates to complete the work specified in the specifications and on the plans. The Contractor shall so inform the Owner of the location of his proposed sources in sufficient time to allow for the necessary preliminary sampling and testing. The Owner shall sample the aggregate source(s) and test those samples to determine the source's suitability for use, based upon the specifications of the Contract. Any materials information provided by the Owner shall not be considered as a part of the contract, and should be used at the discretion of each prospective contractor in formulating his bids and plan of operation.

Any construction, building addition or alteration project which is financed by monies of this state or its political subdivisions shall not use endangered wood species unless an exemption is granted by the director of the Department of Administration. The director shall only grant an exemption if the use of endangered wood species is deemed necessary for historical restoration or to repair existing facilities and the use of any substitute material is not practical. Any lease-purchase agreement entered into by this state or its political subdivisions for construction shall specify that no endangered wood species may be used in the construction unless an exemption is granted by the director. As used in this subsection, an endangered wood species includes those listed in Appendix I of the Convention on International Trade in Endangered Species of Wild Flora and Fauna.

60-02 SAMPLES, TESTS, AND CITED SPECIFICATIONS. All materials used in the work shall be inspected, tested and certified by the Owner before incorporation in the work. Any work in which untested materials are used without approved or written permission of the Owner shall be performed at the Contractor's risk. Materials found to be unacceptable and unauthorized will not be paid for and, if directed by the Owner, shall be removed at the Contractor's expense. Unless otherwise designated, tests in accordance with the cited standard methods of ADOT, AASHTO or ASTM which are current on the date of advertisement for bids will be made by and at the expense of the Owner; samples will be taken by a qualified representative of the Owner.

All materials being used are subject to inspection, test, or rejection at any time prior to or during incorporation into the work.

60-03 CERTIFICATION OF COMPLIANCE. The Owner' may permit the use, prior to sampling and testing, of certain materials or assemblies when accompanied by manufacturer's certificates of compliance stating that such materials or assemblies fully comply with the requirements of the contract.

The certificate shall be signed by the manufacturer. Each lot of such materials or assemblies delivered to the work must be accompanied by a certificate of compliance in which the lot is clearly identified.

Materials or assemblies used on the basis of certificates of compliance may be sampled and tested at any time and if found not to be in conformity with contract requirements will be subject to rejection whether in place or not.

The form and distribution of certificates of compliance shall be as approved by the Owner.

When a material or assembly is specified by "brand name or equal" and the Contractor elects to furnish the specified "brand name," the Contractor shall be required to furnish the manufacturer's certificate of compliance for each lot of such material or assembly delivered to the work. Such certificate of compliance shall clearly identify each lot delivered and shall certify as to:

(a) Conformance to the specified performance, testing, quality or dimensional requirements; and,
(b) Suitability of the material or assembly for the use intended in the contract work.

Should the Contractor propose to furnish an "or equal" material or assembly, he shall furnish the manufacturer's certificates of compliance as hereinbefore described for the specified brand name material or assembly. However, the Owner shall be the sole judge as to whether the proposed "or equal" is suitable for use in the work.

The Owner reserves the right to refuse permission for use of materials or assemblies on the basis of certificates of compliance.

60-04 PLANT INSPECTION. The Owner or his authorized representative may inspect, at its source, any specified material or assembly to be used in the work. Manufacturing plants may be inspected from time to time for the purpose of determining compliance with specified manufacturing methods or materials to be used in the work and to obtain samples required for his acceptance of the material or assembly.

Should the Owner conduct plant inspections, the following conditions shall exist:

(a) The Owner shall have the cooperation and assistance of the Contractor and the producer with whom he has contracted for materials.
(b) The Owner shall have full entry at all reasonable times to such parts of the plant that concern the manufacture or production of the materials being furnished.
(c) If required by the Owner, the Contractor shall arrange for adequate office or working space that may be reasonably needed for conducting plant inspections. Office or working space should be conveniently located with respect to the plant.

It is understood and agreed that the Owner shall have the right to retest any material which has been tested and approved at the source of supply after it has been delivered to the site. The Owner shall have the right to reject only material which, when retested, does not meet the requirements of the contract, plans, or specifications.

60-05 OWNER'S FIELD OFFICE AND LABORATORY. The Owner's field office and laboratory shall be the responsibility of the Contractor or his authorized representative as determined by need by the Owner.

60-06 STORAGE OF MATERIALS. Materials shall be so stored as to assure the preservation of their quality and fitness for the work. Stored materials, even though approved before storage, may again be inspected prior to their use in the work. Stored materials shall be located so as to facilitate their prompt inspection. The Contractor shall coordinate the storage of all materials with the Owner. Private property shall not be used for storage purposes without written permission of the owner or lessee of such property. The Contractor shall make all arrangements and bear all expenses for the storage of materials on private property. Upon request, the Contractor shall furnish the Owner a copy of the property owner's permission.

All storage sites on private property shall be restored to their original condition by the Contractor at his entire expense, except as otherwise agreed to (in writing) by the owner or lessee of the property.

60-07 UNACCEPTABLE MATERIALS. Any material or assembly that does not conform to the requirements of the contract, plans or specifications shall be considered unacceptable and shall be rejected. The Contractor shall remove any rejected material or assembly from the site of the work, unless otherwise instructed by the Owner.

No rejected material or assembly, the defects of which have been corrected by the Contractor, shall be returned to the site of the work until such time as the Owner has approved its use in the work.

60-08 OWNER-FURNISHED MATERIALS. The Contractor shall furnish all materials required to complete the work, except those specified herein (if any) to be furnished by the Owner. Owner-furnished materials shall be made available to the Contractor at the location specified herein.

All costs of handling, transportation from the specified location to the site of work, storage, and installing owner-furnished materials shall be included in the unit price bid for the contract item in which such owner-furnished material is used.

After any owner-furnished material has been delivered to the location specified, the Contractor shall be responsible for any demurrage, damage, loss, or other deficiencies that may occur during the Contractor's handling, storage, or use of such owner-furnished material. The Owner will deduct from any monies due or to become due the Contractor any cost incurred by the Owner in making good such loss due to the Contractor's handling, storage, or use of owner-furnished materials.

SECTION 70

LEGAL RELATIONS AND RESPONSIBILITY TO PUBLIC

70-01 LAWS TO BE OBSERVED. The Contractor shall keep fully informed of all Federal and State laws, all local laws, ordinances, and regulations and all orders and decrees of bodies or tribunals having any jurisdiction or authority, which in any manner affect those engaged or employed on the work, or which in any way affect the conduct of the work. He shall at all times observe and comply with all such laws, ordinances, regulations, orders, and decrees; and shall protect and indemnify the Owner and all his officers, agents, or servants against any claim or liability arising from or based on the violation of any such law, ordinance, regulation, order, or decree, whether by himself or his employees.

Laws and Ordinances: This agreement shall be enforced under the laws of the State of Arizona and Gila County. The Contractor shall maintain in current status all Federal, State and Local licenses and permits required for the operation of the business conducted by the Contractor. The Contractor shall comply with the applicable provisions of the Americans with Disabilities Act (Public Law 101-336, 42 U.S.C. 12101-12213) and applicable federal regulations under the Act.

70-02 PERMITS, LICENSES, AND TAXES. The Contractor shall procure all permits and licenses, pay all charges, fees, and taxes, and give all notices necessary and incidental to the due and lawful prosecution of the work. All costs for any permits, licenses, fees, taxes, or other charges shall be included in the contract price bid.

70-03 PATENTED DEVICES, MATERIALS, AND PROCESSES. If the Contractor is required or desires to use any design, device, material, or process covered by letters of patent or copyright, he shall provide for such use by suitable legal agreement with the patentee or owner. The Contractor and the surety shall indemnify and save harmless the Owner, any third party, or political subdivision from any and all claims for infringement by reason of the use of any patented design, device, material or process, or any trademark or copyright, and shall indemnify the Owner for any costs, expenses, and damages which it may be obliged to pay by reason of an infringement, at any time during the prosecution or after the completion of the work.

70-04 RESTORATION OF SURFACES DISTURBED BY OTHERS. The Owner reserves the right to authorize the construction, reconstruction, or maintenance of any public or private utility service, or a utility service of another government agency at any time during the progress of the work. To the extent that such construction, reconstruction, or maintenance has been coordinated with the Owner, such authorized work (by others) is indicated as follows:

A. Preparatory work on the subgrade by the Owner.

Except as provided above, the Contractor shall not permit any individual, firm, or corporation to excavate or otherwise disturb such utility services or facilities located within the limits of the work without the written permission of the Owner's Engineer.

Should the owner of public or private utility service, or a utility service of another government agency be authorized to construct, reconstruct, or maintain such utility service or facility during the progress of the work, the Contractor shall cooperate with such owners by arranging and performing the work in this contract so as to facilitate such construction, reconstruction or maintenance by others whether or not such work by others is listed above. When ordered as extra work by the Owner's Engineer, the Contractor shall make all necessary repairs to the work which are due to such authorized work by others, unless otherwise provided for in the contract, plans or specifications. It is understood and agreed that the Contractor shall not be entitled to make any claim for damages due to such authorized work by others or for any delay to the work resulting from such authorized work.

70-05 SANITARY, HEALTH, AND SAFETY PROVISIONS. The Contractor shall provide and maintain in a neat, sanitary condition such accommodations for the use of his employees as required to comply with the requirements of the State and local boards of health, or of other bodies or tribunals having jurisdiction. Contractor is responsible for supplying toilet and hand washing facilities at work site.

Attention is directed to Federal, State and local laws, rules and regulations concerning construction safety and health standards. The Contractor shall not require any worker to work in surroundings or under conditions which are unsanitary, hazardous, or dangerous to his health or safety as determined under the Arizona Occupational Safety and Health Standards for Construction, adopted by the Industrial Commission of Arizona pursuant to the Authority in A.R.S. §23-410.

Contractor Safety Tailgate Meetings: Contractor shall conduct tailgate safety meetings regularly to ensure that safety on the job is given priority. Gila County will be represented at each of those informal meetings. Notification shall be given to the County QA/QC Safety Compliance Officer at (928) 402-8506 at least twenty-four (24) hours in advance of the next meeting. Each employee of the Contractor and Sub-Contractor shall read the County Safety & Loss Control Procedures book and sign an acknowledgement.

Accident/Injury Procedure: Contractor shall contact the Owner and the Gila County Risk Management Division within twenty-four (24) hours of the occurrence of an accident or injury arising out of the Contractor's work under this contract.

Unsafe Acts: Contractor employees are encouraged to abate or remedy any unsafe act or condition which may arise in the course of Contractor's work under this contract.

Safety Audits: The County reserves the right to conduct safety audits at the job site and stop unsafe acts at any time. In addition, the County shall be notified should any OSHA inspection occur at a County job site.

70-06 PUBLIC CONVENIENCE AND SAFETY. The Contractor shall control his operations and those of his subcontractors and all suppliers, to assure the least inconvenience to the traveling public. Under all circumstances, safety shall be the most important consideration.

The Contractor shall maintain the free and unobstructed movement of aircraft and/or vehicular traffic with respect to his own operations and those of his subcontractor and all suppliers in accordance with the subsection titled MAINTENANCE OF TRAFFIC of Section 40-05 hereinbefore specified.

70-07 BARRICADES, WARNING SIGNS AND HAZARD MARKINGS. The Contractor shall furnish, erect and maintain all barricades, warning signs, and markings for hazards necessary to protect the public and the work. When used during periods of darkness, such barricades, warning signs and hazard markings shall be suitably illuminated.

For vehicular and pedestrian traffic, the Contractor shall furnish, erect, and maintain barricades, warning signs, lights and other traffic control devices in reasonable conformity with the Manual of Uniform Traffic Control Devices for Streets and Highways (MUTCD Part VI), published by the United States Government Printing Office.

The Contractor shall furnish and erect all barricades, warning signs and markings for hazards prior to commencing work which required such erection and shall maintain the barricades, warning signs, and markings for hazards until their dismantling is directed by the Owner's Engineer.

70-08 PROTECTION AND RESTORATION OF PROPERTY AND LANDSCAPE. The Contractor shall be responsible for the preservation of all public and private property, and shall protect carefully from disturbance or damage all land monuments and property marks until the Contractor's Engineer and the Owner's Engineer has witnessed or otherwise referenced their location and shall not move them until directed.

The Contractor shall be responsible for all damage or injury to property of any character, during the prosecution of the work, resulting from any act, omission, neglect, or misconduct in his manner or method of executing the work, or at any time due to defective work or materials, and said responsibility will not be released until the project shall have been completed and accepted.

When or where any direct or indirect damage or injury is done to public or private property by or on account of any act, omission, neglect, or misconduct in the execution of the work, or in consequence of the non-execution thereof by the Contractor, he shall restore, at his own expense, such property to a condition similar or equal to that existing before such damage or injury was done, by repairing, rebuilding, or otherwise restoring as may be directed, or he shall make good such damage or injury in an acceptable manner.

70-09 RESPONSIBILITY FOR DAMAGE CLAIMS. To the fullest extent permitted by law, Contractor shall defend, indemnify and hold harmless Gila County, and the Pinal Creek Group and their respective agents, representatives, officers, directors, officials, and employees from and against any and all demands, proceedings, suits, actions, claims, damages, or losses relating to, arising out of, resulting from or alleged to have resulted from the performance of the Work. Contractor's duty to defend, indemnify and hold harmless the indemnitee and their respective agents, representatives, officers, directors, officials and employees shall arise in connection with any and all demands, proceedings, suits, actions, claims, workers compensation claims, unemployment claims, damages, losses or expenses (including but not limited to attorneys fees, court costs and the cost of appellate proceedings) that are attributable to personal or bodily injury, sickness, disease, death, or injury to, impairment or destruction of property including the loss of use resulting thereon, caused by any act or omission of the Contractor, a subcontractor, anyone directly or indirectly employed by them or for whose acts they may be liable. The amount and type of insurance coverage requirements set forth in the Contract shall in no way be construed as limiting the scope of this indemnity.

70-10 CONTRACTOR'S INSURANCE. Prior to the execution of the contract, the Contractor shall file with the Owner's Engineer a certificate or certificates of insurance executed by an insurance company doing business in the State of Arizona and acceptable to the Owner's Engineer. The certificate of insurance shall state that, with respect to the contract awarded the Contractor; the Contractor carries insurance in accordance with the requirements of this subsection.

On all policies Gila County shall be named as an additional insured.

All insurance policies or certificates shall include an endorsement providing for thirty (30) days prior written notice to the Owner's Engineer of any cancellation or reduction of coverage. The Contractor shall cease operations on the occurrence of any such cancellation or reduction and shall not resume operations until the required insurance is in force and new certificates of insurance have been filed with the Owner's Engineer. The insurance policy or policies provided by the Contractor may contain deductibles not to exceed $500 for any one accident or occurrence excluding bodily injury.

In addition to statutory Worker's Compensation insurance, the Contractor, with respect to all operations performed by himself or his subcontractors, shall have in force regular public liability insurance in not less than the following amount: **$2,000,000 Combined Single Limit of Liability per Occurrence.**

Such insurance shall include, but not be limited to, coverage for underground damage to facilities because of drilling and excavating with mechanical equipment, and for collapse of or structural injury to structures or utilities because of blasting or explosion, excavation, tunneling, pile driving, cofferdam work or demolition.

With respect to the operation of all motor vehicles, including those hired or borrowed, used in connection with the contract, the Contractor shall have in force automobile liability insurance in not less than the following amount: **$2,000,000 Combined Single Limit of Liability per Occurrence.**

70-11 THIRD PARTY BENEFICIARY CLAUSE. It is specifically agreed between the parties executing the contract that it is not intended by any of the provisions of any part of the contract to create to the public or any member thereof a third party beneficiary or to authorize anyone not a party to the contract to maintain a suit for personal injuries or property damage pursuant to the terms or provisions of the contract.

70-12 OPENING SECTIONS OF THE WORK TO TRAFFIC. Should it be necessary for the Contractor to complete portions of the contract work for the beneficial occupancy of the Owner prior to completion of the entire contract, such "phasing" of the work shall be specified herein and indicated on the plans. When so specified, the Contractor shall complete such portions of the work on or before the date specified or as otherwise specified. The Contractor shall make his own estimate of the difficulties involved in arranging his work to permit such beneficial occupancy by the Owner as described below:

Upon completion of any portion of the work listed above, with certification of the work by the Contractor's Engineer, such portion shall be accepted by the Owner in accordance with the subsection titled PARTIAL ACCEPTANCE of Section 50-14.

No portion of the work may be opened by the Contractor for public use until ordered by the Owner's Engineer in writing. Should it become necessary to open a portion of the work to public traffic on a temporary or intermittent basis, such openings shall be made when, in the opinion of the Owner's Engineer, such portion of the work is in an acceptable condition to support the intended traffic. Temporary or intermittent openings are considered to be inherent in the work and shall not constitute either acceptance of the portion of the work so opened or a waiver of any provision of the contract. Any damage to the portion of the work so opened that is not attributable to traffic which is permitted by the Owner shall be repaired by the Contractor at his expense.

The Contractor shall make his own estimate of the inherent difficulties involved in completing the work under the conditions herein described and shall not claim any added compensation by reason of delay or increased cost due to opening a portion of the contract work.

70-13 CONTRACTOR'S RESPONSIBILITY FOR WORK. Until the Owner's Engineer's final written acceptance of the entire completed work, excepting only those portions of the work accepted in accordance with the subsection titled PARTIAL ACCEPTANCE of Section 50-14, the Contractor shall have the charge and care thereof and shall take every precaution against injury or damage to any part due to the action of the elements or from any other cause, whether arising from the execution or from the non-execution of the work. The Contractor shall rebuild, repair, restore, and make good all injuries or damages to any portion of the work occasioned by any of the above causes before final acceptance and shall bear the expense thereof except damage to the

work due to unforeseeable causes beyond the control of and without the fault or negligence of the Contractor, including but not restricted to acts of God such as earthquake, tidal wave, tornado, hurricane or other cataclysmic phenomenon of nature, or acts of the public enemy or of governmental authorities.

If the work is suspended for any cause whatever, the Contractor shall be responsible for the work and shall take such precautions necessary to prevent damage to the work. The Contractor shall provide for normal drainage and shall erect necessary temporary structures, signs, or other facilities at his expense. During such period of suspension of work, the Contractor shall properly and continuously maintain in an acceptable growing condition all living material in newly established plantings, seedings, and soddings furnished under his contract, and shall take adequate precautions to protect new tree growth and other important vegetative growth against injury.

70-14 CONTRACTOR'S RESPONSIBILITY FOR UTILITY SERVICE AND FACILITIES OF OTHERS. As provided in the subsection titled RESTORATION OF SURFACES DISTURBED BY OTHERS of Section 70-04, the Contractor shall cooperate with the owner of any public or private utility service, or a utility service of another government agency that may be authorized by the Owner to construct, reconstruct or maintain such utility services or facilities during the progress of the work. In addition, the Contractor shall control his operations to prevent the unscheduled interruption of such utility services and facilities and shall notify Blue Stake in accordance with applicable State laws or regulations prior to commencing any work.

It is understood and agreed that the Owner does not guarantee the accuracy or the completeness of the location information relating to existing utility services, facilities, or structures that may be shown on the plans or encountered in the work. Any inaccuracy or omission in such information shall not relieve the Contractor of his responsibility to protect such existing features from damage or unscheduled interruption of service. It is further understood and agreed that the Contractor shall, upon execution of the contract, notify the owners of all utility services or other facilities of his plans of operations. Such notification shall be in writing and addressed to Blue Stake and the respective utility as provided hereinbefore in this subsection and the subsection titled RESTORATION OF SURFACES DISTURBED BY OTHERS of Section 70-04. A copy of each notification shall be given to the Owner's Engineer.

In addition to the general written notification hereinbefore provided, it shall be the responsibility of the Contractor to keep Blue Stake and such individual owners advised of changes in his plan of operations that would affect such owners.

Prior to commencing the work in the general vicinity of an existing utility service or facility, the Contractor shall again notify each such owner of his plan of operation. If, in the Contractor's opinion, the Owner's assistance is needed to locate the utility service or facility or the presence of a representative of the Owner is desirable to observe the work, such advice should be included in the notification. Such notification shall be given by the most expeditious means to reach the utility owner's PERSON TO CONTACT no later than two normal business days prior to the Contractor's commencement of operations in such general vicinity.

The Contractor shall furnish a written summary of the notification to the Owner's Engineer. The Contractor's failure to give the two day's notice hereinabove provided shall be cause for the Owner's Engineer to suspend the Contractor's operations in the general vicinity of a utility service or facility.

Where the outside limits of an underground utility service have been located and staked on the ground, the Contractor shall be required to use excavation methods acceptable to the Owner's Engineer within 3 feet of such outside limits at such points as may be required to insure protection from damage due to the Contractor's operations.

Should the Contractor damage or interrupt the operation of a utility service or facility by accident or otherwise, he shall immediately notify the proper authority and the Owner's Engineer and shall take all reasonable measures to prevent further damage or interruption of service. The Contractor, in such events, shall cooperate with the utility service or facility owner and the Owner's Engineer continuously until such damage has been repaired and service restored to the satisfaction of the utility or facility owner.

The Contractor shall bear all costs of damage and restoration of service to any utility service or facility due to his operations whether or not due to negligence or accident. The contract owner reserves the right to deduct such costs from any monies due or which may become due the Contractor, or his surety.

70-15 FURNISHING RIGHTS-OF-WAY. The Owner will be responsible for furnishing all rights-of-way, permanent easements and temporary construction easements upon which the work is to be constructed in advance of the Contractor's operations.

70-16 PERSONAL LIABILITY OF PUBLIC OFFICIALS. In carrying out any of the contractor provisions or in exercising any power or authority granted to him by this contract, there shall be no liability upon the Owner's Engineer, his authorized representatives, or any official of the Owner either personally or as an official of the Owner. It is understood that in such matters they act solely as agents and representatives of the Owner.

70-17 NO WAIVER OF LEGAL RIGHTS. Upon completion of the work, the Owner will expeditiously make final inspection and notify the Contractor of final acceptance. Such final acceptance, however, shall not preclude or stop the Owner from correcting any measurement, estimate, or certificate made before or after completion of the work, nor shall the Owner be precluded or stopped from recovering from the Contractor or his surety, or both, such overpayment as may be sustained, or by failure on the part of the Contractor to fulfill his obligations under the contract. A waiver on the part of the Owner of any breach of any part of the contract shall not be held to be a waiver of any other or subsequent breach.

The Contractor, without prejudice to the terms of the contract, shall be liable to the Owner for latent defects, fraud, or such gross mistakes as may amount to fraud, or as regards the Owner's rights under any warranty or guaranty.

70-18 ENVIRONMENTAL PROTECTION. The Contractor shall comply with all Federal, State, and local laws and regulations controlling pollution of the environment. He shall take necessary precautions to prevent pollution of streams, lakes, ponds and reservoirs with fuels, oils, bitumen's, chemicals, or other harmful materials and to prevent pollution of the atmosphere from particulate and gaseous matter.

SECTION 80

PROSECUTION AND PROGRESS

80-01 SUBLETTING OF CONTRACT. The Contractor shall not sublet, sell, transfer, assign or otherwise dispose of the contract or contracts or any portion thereof or of his right, title or interest therein without written consent of the Owner's Engineer. In case such consent is given, the Contractor will be permitted to sublet a portion thereof, but shall perform with his own organization work amounting to not less than 50 percent of the total contract amount, except that any items designated in the contract as "Specialty Items" may be performed by subcontract and the cost of any such specialty items so performed by subcontract may be deducted from the total cost before computing the amount of work required to be performed by the Contractor with his own organization. No subcontracts or transfer of contract shall release the Contractor of his liability under the contract and bond.

"His own organization" shall be construed to include only workmen employed and paid directly by the prime contractor and equipment owned or rented by him, with or without operators.

"Specialty Items" shall be construed to be limited to work that requires highly specialized knowledge, craftsmanship or equipment not ordinarily available in contracting organizations qualified to bid on the contract as a whole and in general are to be limited to minor components of the overall contract.

The contract amount upon which the 50 percent requirement is computed includes the cost of materials and manufactured products which are to be purchased or produced by the Contractor under the contract provisions.

Any items that have been selected as "Specialty Items" for the contract will be listed as such in the special provisions, bidding schedule, or elsewhere in the contract documents.

The Owner will not recognize any subcontractor on the work. The Contractor shall at all times when work is in progress be represented either in person, by a qualified superintendent, or by other designated, qualified representative who is duly authorized to receive and execute the orders of the Owner's Engineer.

Should the Contractor elect to assign his contract, said assignment shall be concurred in by the surety, shall be presented for the consideration and approval of the Owner, and shall be consummated only on the written approval of the Owner. In case of approval, the Contractor shall file copies of all subcontracts with the Owner's Engineer.

80-02 NOTICE TO PROCEED. The notice to proceed shall state the date on which it is expected the Contractor will begin the construction and from which date contract time will be charged. The Contractor shall begin the work to be performed under the contract within ten (10) calendar days of the date set by the Owner's Engineer in the written notice to proceed, but in any event, the Contractor shall notify the Owner's Engineer at least two (2) work days in advance of the time actual construction operations will begin.

80-03 PROSECUTION AND PROGRESS. Unless otherwise specified, the Contractor shall submit his progress schedule for the Owner's Engineer's approval within 10 days after the effective date of the notice to proceed. The Contractor's progress schedule, when approved by the Owner's Engineer, may be used to establish major construction operations and to check on the progress of the work. The Contractor shall provide sufficient materials, equipment, and labor to guarantee the completion of the project in accordance with the plans and specifications within the time set forth in the proposal.

If the Contractor falls significantly behind the submitted schedule, the Contractor shall, upon the Owner's Engineer's request, submit a revised schedule for completion of the work within the contract time and modify his operations to provide such additional materials, equipment, and labor necessary to meet the revised schedule. Should the prosecution of the work be discontinued for any reason, the Contractor shall notify the Owner's Engineer at least twenty-four (24) hours in advance of resuming operations.

The Contractor shall not commence any actual construction prior to the date on which the notice to proceed is issued by the Owner.

80-04 CONSTRUCTION LIMITS. Construction limits shall be defined as that area of the public right-of-way, easement or area shown on the construction plans to be disturbed as a part of this contract for this project.

80-05 CHARACTER OF WORKERS, METHODS AND EQUIPMENT. The Contractor shall, at all times, employ sufficient labor and equipment for prosecuting the work to full completion in the manner and time required by the contract, plans and specifications.

All workers shall have sufficient skill and experience to perform properly the work assigned to them. Workers engaged in special work or skilled work shall have sufficient experience in such work and in the operation of the equipment required to perform the work satisfactorily.

Any person employed by the Contractor or by any subcontractor who, in the opinion of the Owner's Engineer, does not perform his work in a proper and skillful manner or is intemperate or disorderly shall, at the written request of the Owner's Engineer, be removed forthwith by the Contractor or subcontractor employing such person, and shall not be employed again in any portion of the work without the approval of the Owner's Engineer.

Should the Contractor fail to remove such person or persons or fail to furnish suitable and sufficient personnel for the proper prosecution of the work, the Owner's Engineer may suspend the work by written notice until compliance with such orders.

All equipment which is proposed to be used on the work shall be of sufficient size and in such mechanical condition as to meet requirements of the work and to produce a satisfactory quality of work. Equipment used on any portion of the work shall be such that no injury to previously completed work, adjacent property, or existing facilities will result from its use.

When the methods and equipment to be used by the Contractor in accomplishing the work are not prescribed in the contract, the Contractor is free to use any methods or equipment that will accomplish the work in conformity with the requirements of the contract, plans and specifications. When the contract specifies the use of certain methods and equipment, such methods and equipment shall be used unless others are authorized by the Owner's Engineer. If the Contractor desires to use a method or type of equipment other than specified in the contract, he may request authority from the Owner's Engineer to do so. The request shall be in writing and shall include a full description of the methods and equipment proposed and of the reasons for desiring to make the change. If approval is given, it will be on the condition that the Contractor will be fully responsible for producing work in conformity with contract requirements. If, after trial use of the substituted methods or equipment, the Owner's Engineer determines that the work produced does not meet contract requirements, the Contractor shall discontinue the use of the substitute method or equipment and shall complete the remaining work with the specified methods and equipment. The Contractor shall remove any deficient work and replace it with work of specified quality, or take such other corrective action as the Owner's Engineer may direct. No change will be made in basis of payment for the contract items involved nor in contract time as a result of authorizing a change in methods or equipment under this subsection.

80-06 TEMPORARY SUSPENSION OF THE WORK. The Owner's Engineer shall have the authority to suspend the work wholly, or in part, for such period or periods as he may deem necessary, due to unsuitable weather, or such other conditions as are considered unfavorable for the prosecution of the work, or for such time as is necessary due to the failure on the part of the Contractor to carry out orders given or perform any or all provisions of the contract.

In the event that the Contractor is ordered by the Owner's Engineer, in writing, to suspend work for some unforeseen cause not otherwise provided for in the contract and over which the Contractor has no control, the Contractor may be reimbursed for actual money expended on the work during the period of shutdown. No allowance will be made for anticipated profits. The period of shutdown shall be computed from the effective date of the Owner's Engineer's order to suspend work to the effective date of the Owner's Engineer's order to resume the work. Claims for such compensation shall be filed with the Owner's Engineer within the time period stated in the Owner's Engineer's order to resume work. The Contractor shall submit with his claim information substantiating the amount shown on the claim. The Owner's Engineer will forward the Contractor's claim to the Owner for consideration in accordance with local laws or ordinances. No provision of this article shall be construed as entitling the Contractor to compensation for delays due to inclement weather, for suspensions made at the request of the Contractor, or for any other delay provided for in the contract, plans or specifications.

If it should become necessary to suspend work for an indefinite period, the Contractor shall store all materials in such manner that they will not become an obstruction nor become damaged in any way. He shall take every precaution to prevent damage or deterioration of the work performed and provide for normal drainage of the work. The Contractor shall erect temporary structures where necessary to provide for the continuous flow of traffic.

80-07 DETERMINATION AND EXTENSION OF CONTRACT TIME. The number of calendar or working days allowed for completion of the work shall be stated in the proposal and contract and shall be known as the CONTRACT TIME.

Should the contract time require extension for reasons beyond the Contractor's control, it shall be adjusted as follows:

(a) CONTRACT TIME (10-13) based on WORKING DAYS (10-41) shall be calculated weekly by the Owner's Engineer. The Owner's Engineer will furnish the Contractor a copy of his weekly statement of the number of working days charged against the contract time during the week and the number of working days currently specified for completion of the contract (the original contract time plus the number of working days, if any, that have been included in approved CHANGE ORDERS (10-10) or SUPPLEMENTAL AGREEMENTS (10-38) covering EXTRA WORK (40-04).

The Owner's Engineer shall base his weekly statement of contract time charged on the following considerations:

(1) No time shall be charged for days on which the Contractor is unable to proceed with the principal item of work under construction at the time for at least 6 hours with the normal work force employed on such principal item. Should the normal work force be on a double-shift, 12 hours shall be used. Should the normal work force be on a triple-shift, 18 hours shall apply. Conditions beyond the Contractor's control such as strikes, lockouts, unusual delays in transportation, temporary suspension of the principal items of work under construction or temporary suspension of the entire work which have been ordered by the Owner's Engineer for reasons not the fault of the Contractor, shall not be charged against the contract time.

(2) The Owner's Engineer will not make charges against the contract time prior to the effective date of the notice to proceed.

(3) The Owner's Engineer will begin charges against the contract time on the first working day after the effective date of the notice to proceed.

(4) The Owner's Engineer will not make charges against the contract time after the date of final acceptance as defined in the subsection titled FINAL ACCEPTANCE of Section 50-15.

(5) The Contractor will be allowed one week in which to file a written protest setting forth his objections to the Owner's Engineer's weekly statement. If no objection is filed within such specified time, the weekly statement shall be considered as acceptable to the Contractor.

The contract time (stated in the proposal) is based on the originally estimated quantities as described in the subsection titled INTERPRETATION OF ESTIMATED PROPOSAL QUANTITIES of Section 20-05.

Should the satisfactory completion of the contract require performance of work in greater quantities than those estimated in the proposal, the contract time shall be increased in the same proportion as the cost of the actually completed quantities bears to the cost of the originally estimated quantities in the proposal. Such increase in contract time shall not consider either the cost of work or the extension of contract time that has been covered by change order or supplemental agreement and shall be made at the time of final payment.

(b) CONTRACT TIME (10-13) based on CALENDAR DAYS (10-09) shall consist of the number of calendar days stated in the contract counting from the effective date of the notice to proceed and including all Saturdays, Sundays, holidays, and non-work days. All calendar days elapsing between the effective dates of the Owner's Engineer's orders to suspend and resume all work, due to causes not the fault of the Contractor, shall be excluded.

At the time of final payment, the contract time shall be increased in the same proportion as the final cost bears to the estimated cost in the proposal. Such increase in the contract time shall not consider either the cost of work or the extension of contract time that has been covered by a change order or supplemental agreement. Charges against the contract time will cease as of the date of final acceptance.

(c) When the contract time is a specified completion date, it shall be the date on which all contract work shall be substantially completed.

If the Contractor finds it impossible for reasons beyond his control to complete the work within the contract time as specified, or as extended in accordance with the provisions of this subsection, he may, at any time prior to the expiration of the contract time as extended, make a written request to the Owner's Engineer for an extension of time setting forth the reasons which he believes will justify the granting of his request. The Contractor's plea that insufficient time was specified is not a valid reason for extension of time. If the Owner's Engineer finds that the work was delayed because of conditions beyond the control and without the fault of the Contractor, he may extend the time for completion in such amount as the conditions justify. The extended time for completion shall then be in full force and effect, the same as though it were the original time for completion.

80-08 FAILURE TO COMPLETE ON TIME. For each calendar day or working day, as specified in the contract, that any work remains uncompleted after the contract time (including all extensions and adjustments as provided in the subsection titled DETERMINATION AND EXTENSION OF CONTRACT TIME of Section 80-07) the sum specified in the contract and proposal as liquidated damages will be deducted from any money due or to become due the Contractor or his surety. Such deducted sums shall not be deducted as a penalty but shall be considered as liquidation of a reasonable portion of damages that will be incurred by the Owner should the Contractor fail to complete the work in the time provided in his contract.

Permitting the Contractor to continue and finish the work or any part of it after the time fixed for its completion, or after the date to which the time for completion may have been extended, will in no way operate as a waiver on the part of the Owner of any of its rights under the contract.

80-09 DEFAULT AND TERMINATION OF CONTRACT. The Contractor shall be considered in default of his contract and such default will be considered as cause for the Owner to terminate the contract for any of the following reasons if the Contractor:

(a) Fails to begin the work under the contract within the time specified in the "Notice to Proceed (80-02)"; or
(b) Fails to perform the work or fails to provide sufficient workers, equipment or materials to assure completion of work in accordance with the terms of the contract; or
(c) Performs the work unsuitably or neglects or refuses to remove materials or to perform anew such work as may be rejected as unacceptable and unsuitable; or
(d) Discontinues the prosecution of the work; or
(e) Fails to resume work which has been discontinued within a reasonable time after notice to do so; or
(f) Becomes insolvent or is declared bankrupt, or commits any act of bankruptcy or insolvency; or
(g) Allows any final judgment to stand against him unsatisfied for a period of 10 days; or
(h) Makes an assignment for the benefit of creditors; or
(i) For any other cause whatsoever, fails to carry on the work in an acceptable manner.

Should the Owner's Engineer consider the Contractor in default of the contract for any reason hereinbefore, he shall immediately give written notice to the Contractor and the Contractor's surety as to the reasons for considering the Contractor in default and the Owner's intentions to terminate the contract.

If the Contractor or surety, within a period of 10 calendar days after such notice, does not proceed in accordance therewith, then the Owner will, upon written notification from the Owner's Engineer of the facts of such delay, neglect, or default and the Contractor's failure to comply with such notice, have full power and authority without violating the contract, to take the prosecution of the work out of the hands of the Contractor. The Owner may appropriate or use any or all materials and equipment that have been mobilized for use in the work and are acceptable and may enter into an agreement for the completion of said contract according to the terms and provisions thereof, or use such other methods as in the opinion of the Owner's Engineer will be required for the completion of said contract in an acceptable manner.

All costs and charges incurred by the Owner, together with the cost of completing the work under contract, will be deducted from any monies due or which may become due the Contractor. If such expense exceeds the sum which would have been payable under the contract, then the Contractor and the surety shall be liable and shall pay to the Owner the amount of such excess.

80-10 TERMINATION FOR NATIONAL EMERGENCIES. The Owner shall terminate the contract or portion thereof by written notice when the Contractor is prevented from proceeding with the construction contract as a direct result of an Executive Order of the President with respect to the prosecution of war or in the interest of national defense.

When the contract, or any portion thereof, is terminated before completion of all items of work in the contract, payment will be made for the actual number of units or items of work completed at the contract price or as mutually agreed for items of work partially completed or not started. No claims or loss of anticipated profits shall be considered.

Reimbursement for organization of the work, and other overhead expenses, (when not otherwise included in the contract) and moving equipment and materials to and from the job will be considered, the intent being that an equitable settlement will be made with the Contractor.

Acceptable materials, obtained or ordered by the Contractor for the work and that are not incorporated in the work shall, at the option of the Contractor, be purchased from the Contractor at actual cost as shown by receipted bills and actual cost records at such points of delivery as may be designated by the Owner's Engineer.

Termination of the contract or a portion thereof shall neither relieve the Contractor of his responsibilities for the completed work nor shall it relieve his surety of its obligation for and concerning any just claim arising out of the work performed.

SECTION 90

MEASUREMENT AND PAYMENT

90-01 MEASUREMENT OF QUANTITIES. All work completed under the contract will be measured by the Contractor's Engineer, certified and furnished to the Owner's Engineer and verified by the Owner or his authorized representatives, using United States Customary Units of Measurement.

The method of measurement and computations to be used in determination of quantities of material furnished and of work performed under the contract will be those methods generally recognized as conforming to good engineering practice.

Unless otherwise specified, longitudinal measurements for area computations will be made horizontally, and no deductions will be made for individual fixtures (or leave-outs) having an area of 9 square feet or less. Unless otherwise specified, transverse measurements for area computations will be the neat dimensions shown on the plans or ordered in writing by the Owner's Engineer.

Structures will be measured according to neat lines shown on the plans or as altered to fit field conditions.

Unless otherwise specified, all contract items which are measured by the linear foot such as pipe culverts, and similar items shall be measured parallel to the base or foundation upon which such items are placed.

In computing volumes of excavation the average end area method or other methods acceptable to the Owner's Engineer, will be used.

Areas of materials paid for by area shall be measured using the centerline length of the facility multiplied by the lesser of the average actual or plan dimensions perpendicular to centerline. Actual width shall be measured at random locations along the length of the project, with an average of two measurements per station. Volumes of materials in place shall be determined by multiplying the area by the lesser of the plan or actual average thickness of the material. Materials in a structural section such as aggregate base shall be not less than the specified thickness.

The thickness of plates and galvanized sheet used in the manufacture of corrugated metal pipe, metal plate pipe culverts and arches, and metal cribbing will be specified and measured in decimal fraction of inches.

The term "ton" will mean the short ton consisting of 2,000 pound avoirdupois. All materials which are measured or proportioned by weights shall be weighed on accurate, approved scales by competent, qualified personnel at locations designated by the Owner's Engineer.

If material is shipped by rail, the car weight may be accepted provided that only the actual weight of material be paid for. However, car weights will not be acceptable for material to be passed through mixing plants.

Trucks used to haul material being paid for by weight shall be weighed empty at least twice daily at such times as the Owner's Engineer directs, and each truck shall bear a plainly legible identification mark. Such empty weights shall be recorded with the time and truck identification on a Tare Sheet. Copies of each days Tare Sheets and the current scale certification shall be furnished to the Owner's Engineer with the pay request.

Materials **SHALL NOT** be measured by volume in the hauling vehicle unless approved in writing in advance by the Owner's Engineer.

When requested by the Contractor and approved by the Owner's Engineer in writing, material specified to be measured by the cubic yard may be weighed and such weights will be converted to cubic yards for payment purposes. Factors for conversion from weight measurement to volume measurement will be determined by the Owner's Engineer and shall be agreed to by the Contractor before such method of measurement of pay quantities is used.

Bituminous materials will be measured by the gallon or ton. When measured by volume, such volumes will be measured at 60 degrees F. or will be corrected to the volume at 60 degrees F. using ASTM D 1250 for asphalts or ASTM D 633 for tars.

Net certified scale weights or weights based on certified volumes in the case of rail shipments will be used as a basis of measurement, subject to correction when bituminous material has been lost from the car or the distributor, wasted, or otherwise not incorporated in the work.

When bituminous materials are shipped by truck or transport, net certified weights by volume, subject to correction for loss or foaming, may be used for computing quantities.

Portland cement, fly ash and lime will be measured by the ton or hundredweight.

Timber will be measured by the thousand feet board measure (M.F.B.M.) actually incorporated in the structure. Measurement will be based on nominal widths and thickness and the extreme length of each piece.

The term "lump sum" when used as an item of payment will mean complete payment for the work described in the contract. Contractor shall furnish a fee schedule to the Owner's Engineer at the preconstruction conference for all professional service lump sum items such as construction surveying and materials testing.

When a complete structure or structural unit (in effect, "lump sum" work) is specified as the unit of measurement, the unit will be construed to include all necessary fittings and accessories.

Rental of equipment will be measured by time in hours of actual working time and necessary traveling time of the equipment within the limits of the work. Special equipment ordered by the Owner's Engineer in connection with force account work will be measured as agreed in the change order or supplemental agreement authorizing such force account work as provided in the subsection titled PAYMENT FOR EXTRA AND FORCE ACCOUNT WORK of Section 90-05.

When standard manufactured items are specified such as fence, wire, plates, rolled shapes, pipe conduit, etc., and these items are identified by gauge, unit weight, section dimensions, etc., such identification will be considered to be nominal weights or dimensions. Unless more stringently controlled by tolerances in cited specifications, manufacturing tolerances established by the industries involved will be accepted.

Scales for weighing materials which are required to be proportioned or measured and paid for by weight shall be furnished, erected, and maintained by the Contractor, or by certified permanently installed commercial scales. Scales shall be accurate within one-half per cent of the correct weight throughout the range of use. The Contractor shall have the scales checked under the observation of the inspector before beginning work and at such other times as requested. The intervals shall be uniform in spacing throughout the graduated or marked length of the beam or dial and shall not exceed one-tenth of one per cent of the nominal rated capacity of the scale, but not less than one pound. The use of spring balances will not be permitted.

Beams, dials, platforms, and other scale equipment shall be so arranged that the operator and inspector can safely and conveniently view them.

Scale installations shall have available, ten standard fifty-pound weights for testing the weighing equipment or suitable weights and devices for other approved equipment.

Scales must be tested for accuracy and serviced before use at a new site. Platform scales shall be installed and maintained with the platform level and rigid bulkheads at each end.

Scales "overweighing" (indicating more than correct weight) will not be permitted to operate and all materials received subsequent to the last previous correct weighing-accuracy-test will be reduced by the percentage of error in excess of one-half of one per cent.

In the event inspection reveals the scales have been "under-weighing" (indicating less than correct weight) they shall be adjusted and no additional payment to the Contractor will be allowed for materials previously weighed and recorded.

All costs in connection with furnishing, installing, certifying, testing, and maintaining scales: for furnishing check weights and scale house; and for all other items specified in this subsection, for the weighing of materials for proportioning or payment, shall be included in the unit contract prices for the various items of the project.

When the estimated quantities for a specific portion of the work are designated as pay quantities in the contract, they shall be the final quantities for which payment for such specific portion of the work will be made, unless the dimensions of said portions of the work shown on the plans are revised by the Owner's Engineer. If revised dimensions result in an increase or decrease in the quantities of such work, the final quantities for payment will be revised in the amount represented by the authorized changes in the dimensions.

90-02 SCOPE OF PAYMENT. The Contractor shall receive and accept compensation provided for in the contract as full payment for furnishing all materials, for performing all work under the contract in a complete and acceptable manner, and for all risk, loss, damage, or expense of whatever character arising out of the nature of the work or the prosecution thereof, subject to the provisions of the subsection titled NO WAIVER OF LEGAL RIGHTS of Section 70-17.

When the "basis of payment" subsection of a technical specification requires that the contract price (price bid) include compensation for certain work or material essential to the item, this same work or material will not also be measured for payment under any other contract item which may appear elsewhere in the contract, plans or specifications.

Periodic progress payments shall be in accordance with A.R.S. §34-221.

90-03 COMPENSATION FOR ALTERED QUANTITIES. When the accepted quantities of work vary from the quantities in the proposal, the Contractor shall accept as payment in full, so far as contract items are concerned, payment at the original contract price for the accepted quantities of work actually completed and accepted. No allowance, except as provided for in the subsection titled ALTERATION OF WORK AND QUANTITIES of Section 40-02 will be made for any increased expense, loss of expected reimbursement, or loss of anticipated profits suffered or claimed by the Contractor which results directly from such alterations or indirectly from his unbalanced allocation of overhead and profit among the contract items, or from any other cause.

90-04 PAYMENT FOR OMITTED ITEMS. As specified in the subsection titled OMITTED ITEMS of Section 40-03, the Owner's Engineer shall have the right to omit from the work (order nonperformance) any contract item, except major contract items, in the best interest of the Owner.

Should the Owner's Engineer omit to order nonperformance of a contract item or portion of such item from the work, the Contractor shall accept payment in full at the contract prices for any work actually completed and acceptable prior to the Owner's Engineer's order to omit or non-perform such contract item.

Acceptable materials ordered by the contract or delivered on the work prior to the date of the Owner's Engineer's order will be paid for at the actual cost to the Contractor and shall thereupon become the property of the Owner.

In addition to the reimbursement hereinbefore provided, the Contractor shall be reimbursed for all actual costs incurred for the purpose of performing the omitted contract item prior to the date of the Owner's Engineer's order. Such additional costs incurred by the Contractor must be directly related to the deleted contract item and shall be supported by certified statements by the Contractor as to the nature and amount of such costs.

90-05 PAYMENT FOR EXTRA AND FORCE ACCOUNT WORK. Extra work, performed in accordance with the subsection titled EXTRA WORK of Section 40-04, will be paid for at the contract prices or agreed prices specified in the change order or supplemental agreement authorizing the extra work requiring that it be done by force account, such force account shall be measured and paid for as follows:

(a) Labor. For all labor (skilled and unskilled) and foremen in direct charge of a specific force account item, the Contractor shall receive the rate of wage (or scale) for every hour that such labor or foreman is actually engaged in the specified force account work. Such wage (or scale) shall be agreed upon in writing before beginning the work.

The Contractor shall receive the actual costs paid to, or in behalf of, workers by reason of subsistence and travel allowances, health and welfare benefits, pension fund benefits or other benefits, when such amounts are required by collective bargaining agreement or other employment contract generally applicable to the classes of labor employed on the work. An amount equal to 15 percent of the sum of the above items will also be paid the Contractor.

(b) Insurance and Taxes. For property damage, liability and workmen's compensation insurance premiums, unemployment insurance contributions, and social security taxes on the force account work the Contractor shall receive the actual cost, to which cost (sum) 5 percent will be added. The Contractor shall furnish satisfactory evidence of the rate or rates paid for such insurance and taxes.

(c) Materials. For materials accepted by the Owner's Engineer and used, the Contractor shall receive the actual cost of such materials delivered on the work, including transportation charges paid by him (exclusive of machinery rentals as hereinafter set forth), to which cost (sum) 15 percent will be added.

(d) Equipment. For any machinery or special equipment (other than small tools) including fuel and lubricants, plus transportation costs, the use of which has been authorized by the Owner's Engineer, the Contractor shall receive the rental rates in the current "Blue Book for Construction Equipment".

(e) Miscellaneous. No additional allowance will be made for general superintendence, the use of small tools, or other costs for which no specific allowance is herein provided.

(f) Comparison of Records. The Contractor and the Owner's Engineer shall compare records of the cost of force account work at the end of each day. Agreement shall be indicated by signature of the Contractor and Owner's Engineer or their duly authorized representatives.

(g) Statements. No payment will be made for work performed on a force account basis until the Contractor has furnished the Owner's Engineer with duplicate itemized statements of the cost of such force account work detailed as follows:

(1) Name, classification, date, daily hours, total hours, rate and extension for each laborer and foreman.
(2) Designation, dates, daily hours, total hours, rental rate and extension for each unit of machinery and equipment.
(3) Quantities of material, prices, and extensions.
(4) Transportation of materials.
(5) Cost of property damage, liability and workmen's compensation insurance premiums, unemployment insurance contribution and social security tax.

Statements shall be accompanied and supported by receipted invoice for all materials used and transportation charges. However, if materials used on the force account work are not specifically purchased for such work but are taken from the Contractor's stock, then in lieu of the invoices the Contractor shall furnish an affidavit certifying that such materials were taken from his stock, that the quantity claimed, was actually used, and that the price and transportation claimed represent the actual cost to the Contractor.

The additional payment, based on the percentages specified above, shall constitute full compensation for all items of expense not specifically provided for in the force account work. The total payment made as provided above shall constitute full compensation for such work.

90-06 ACCEPTANCE AND FINAL PAYMENT. When the contract work has been accepted in accordance with the requirements of the subsection titled FINAL ACCEPTANCE of Section 50-15, the Owner's Engineer will prepare the final estimate of the items of work actually performed. The Contractor shall approve the Owner's Engineer's final estimate or advise the Owner's Engineer of his objections to the final estimate which are based on disputes in measurements or computations of the final quantities to be paid under the contract as amended by change order or supplemental agreement. The Contractor and Owner's Engineer shall resolve all disputes (if any) in the measurement and computation of final quantities to be paid within 30 calendar days of the Contractor's receipt of the Owner's Engineer's final estimate. If, after such 30-day period, a dispute still exists, the Contractor may approve the Owner's Engineer's estimate under protest of the quantities in dispute and such disputed quantities shall be considered by the Owner as a claim in accordance with the subsection titled CLAIMS FOR ADJUSTMENT AND DISPUTES of Section 50-16.

Measurement & Payment continued...

After the Contractor has approved, or approved under protest, the Owner's Engineer's final estimate, final payment will be processed based on the entire sum, or the undisputed sum in case of approval under protest, determined to be due the Contractor less all previous payments and all amounts to be deducted under the provisions of the contract. All prior partial estimates and payments shall be subject to correction in the final estimate and payment.

Contractor shall provide an executed Affidavit of Release of Liens and an Affidavit of Payment to the Owners Engineer prior to the release of the final payment.

If the Contractor has filed a claim for additional compensation under the provisions of the subsection titled CLAIMS FOR ADJUSTMENTS AND DISPUTES of Section 50-16 or under the provisions of this subsection, such claims will be considered by the Owner in accordance with local laws or ordinances. Upon final adjudication of such claims, any additional payment determined to be due the Contractor will be paid pursuant to a supplemental, final estimate.

SPECIAL PROVISIONS

SP-1 TO SP-7

SPECIAL PROVISIONS

RUSSELL ROAD RECONSTRUCTION PROJECT

1. PROPOSED WORK

The work consists of clearing and grubbing, removal of existing structures (e.g., asphaltic pavement, drainage pipe,...etc.) interfering with the work, installation of: miscellaneous items, masonry walls, corrugated metal pipe, dumped rock riprap, gabion systems, asphaltic concrete pavement, aggregate base course, utility trench and other work as shown within the plans.

2. GENERAL REQUIREMENTS

The project has been designed utilizing the Arizona Department of Transportation (ADOT) Construction Standard Drawings (Latest Series), and 2008 Standard Specifications, with appropriate current revisions along with Uniform Standard Specifications for Public Works Construction (Latest Edition and Revisions), Maricopa Association of Governments. Wherever reference in the Standard Specifications is made to MAG, ADOT, the Owner, or the Department: it shall refer to Gila County.

In the event of any conflict between the plans and Standard Specifications, the plans shall prevail. In the event of any conflict between these Special Provisions and the plans or Standard Specifications, these Special Provisions shall prevail.

The following STANDARD SPECIFICATIONS and/or details are considered a part of these Contract Documents and are considered as binding as if actually attached hereto:

- Arizona Department of Transportation, Highways Division, Standard Specifications for Road and Bridge Construction, Edition of 2008,
- Arizona Department of Transportation, Highways Division, Standard Drawings, listed in the project plans and defined hereinafter,
- Manual on Uniform Traffic Control Devices, Millennium Edition, and Amendments.
- Uniform Standard Specifications for Public Works Construction (Latest Edition and Revisions). Maricopa Association of Governments.
- Arizona Water Company Specifications and Standard Details, April 2004.

3. POINTS AND INSTRUCTION AND AS-BUILTS

The Contractor will furnish and set control stakes and points for line and grade and will furnish the Engineer with the necessary information relating to such stakes and points.

The Contractor will provide such intermediate stakes as he may need to set to comply with these Specifications.

The Contractor shall carefully preserve benchmarks, reference points and stakes, and in case of willful or careless destruction, he shall be charged with the resulting expense of replacement, and shall be responsible for any mistakes that may be caused by their unnecessary loss or disturbance.

In the event that it is necessary for the OWNER to duplicate his work because of acts of omission or negligence on the part of the Contractor, or because of the removal of defective work, such additional cost of engineering shall be borne by the Contractor.

When the work is completed, the Contractor shall provide the OWNER with a set of as-built drawings on clean prints of the original drawings. The as-built drawings shall indicate in a neat and accurate manner all changes and revisions in the original design which affect the permanent structures and which exist in the completed work. All underground utilities relocated under this contract shall be referenced to semi-permanent or permanent physical objects.

The alterations and references shall be made with colored ink and shall be sufficiently clear and complete to enable reproducing these changes on the original tracings. The Engineer will document these changes on the original tracings and forward the tracings to the Contractor for review and signature. The registered Professional Land Surveyor who performed the Final Survey shall certify the As-Built information by signing and sealing the tracings for the Contractor. Final payment of this contract will not be made to the Contractor until the As-Built drawings are satisfactorily produced and certified.

As-Built conditions shall be kept current. They shall be inspected for accuracy and completeness monthly. The Contractor shall certify on his monthly payment requisition that the drawings are accurate and complete before the monthly payment estimate will be prepared and approved.

4. CONSTRUCTION LIMITS

The Contractor shall not disturb any vegetation or operate any equipment outside the approved clearing limits as defined in ADOT Standard Specifications, Section 201 - Clearing and Grubbing and as specified in the Technical Specifications. These limits shall be known as the Construction Limits. Deviation outside these limits is not authorized.

The Owner shall provide land, right-of-way, and easements for all work specified in this contract, except that the Contractor shall provide additional land if required for the erection of temporary construction facilities for storage of his material, together with right of access to same. The Contractor shall not enter or occupy with men, tools, equipment or materials, any private property without written consent of the Owner thereof.

The Contractor shall submit at the preconstruction conference a map showing the proposed location of his Contractor's yard. The location of the yard is subject to the approval of the Owner. The Contractor is responsible for the security of his yard and the equipment and materials stored at the yard or construction site. Damage, theft, vandalism, or loss of such equipment or materials is the responsibility of the Contractor. The Contractor will not be compensated for replacement, repair, or refusal of materials by the Engineer damaged by vandalism or theft. The Contractor will take whatever measures are necessary to secure his yard, equipment, and materials. Security measures such as yard fences, security guards, locks, chains, etc. are incidental to the work for this project.

5. OPERATION AND TRAFFIC CONTROL PLANS

The Contractor shall submit to the Owner for approval his proposed sequence of operations and a compatible method of maintaining traffic as described in ADOT Section 107 of the Standard Specifications and the Technical Provisions. The Contractor shall submit to the Owner a Traffic Control Plan sealed by an Arizona registered Professional Civil Engineer. The proposal and plan shall be submitted at the preconstruction conference. The Owner shall notify the Contractor of any required changes to the proposal/plan and the Contractor shall address any and all revisions. The Contractor shall be aware that the Owner shall require that Russell Road, between Roberts Road and Besich Boulevard shall remain closed to through traffic, from the commencement of construction until the final surface course (ACFC) has been completely installed allowing for local access only.

6. QUALITY CONTROL PLAN AND WEEKLY REPORTS

The Contractor shall submit to the Engineer for review and approval his Quality Control Plan. The plan shall include, but not be limited to, individual test item costs, and testing frequency. The plan shall be submitted at the preconstruction conference.

Failure of the Contractor to submit Weekly Quality Control Reports, current to the most recent submittal date, will be grounds for the Engineer to withhold payment on a monthly basis until compliance is attained. Withheld payments on which requirements have been met will be made on the next regular estimate.

7. SAMPLING AND TESTING

All testing and sampling as specified herein shall be performed by a geotechnical laboratory. Unless otherwise specified, the cost of the laboratory testing, heavy equipment rental and labor incident to practical tests specified shall be at the Owner's expense.

The Contractor shall notify, during the preconstruction conference, the Owner of the proposed sources of all materials required by the Specifications to be tested. Before work starts sufficient time shall be allowed for the taking of samples and completing tests required.

For the verification of weights and character of materials, the Owner shall have access at all reasonable times to all parts of the work, plants, and assembly yards connected with the work. The Contractor shall facilitate and assist in the verification of all scales, measures and other devices, which he operates. Reference to ASTM and other Standard Specifications shall be considered to mean current standards. If it is found that sources of supply that have been approved do not furnish a uniform product, or if the product from any source proves unacceptable at any time, the Contractor shall furnish approved material from other approved sources. No material which, after approval, has in any way become unfit for use shall be used in the work. The approval of any material represented by any sample or samples shall not be taken as a guarantee of all materials from the source; and it shall be understood that all materials delivered to the site are subject to test at any time and will be rejected if they do not meet the requirement of the Specifications.

8. MEASUREMENT AND PAYMENT

Measurement will be in place for the completed work, with no allowance for waste, and as may be more particularly described in the description of the various items set forth in the Standard Specifications and as shown on the plans. All earthwork, fill and excavation, submitted for payment shall be certified by an Arizona registered Professional Land Surveyor in support of the work performed by the Contractor.

No additional payments will be made for work related to any item unless specifically noted and called for in the Proposal. Payment will be made at the unit price or lump sum price bid in the Proposal.

In addition to the requirements set forth in the ADOT Standard Specifications, no measurement or direct payment will be made for the following work. The cost for such work shall be considered as included in the price of other contract items.

A. Removal and salvage items as called for on the plans, in the Standard Specifications, or these Special Provisions.
B. Removal, salvage and/or re-installation of existing fence lines.
C. Sampling, testing, certification, and other quality control actions.
D. Disposal of surplus, waste or non-salvageable materials.
E. Grading of drainage ditches and drainage excavation not called out on the plans.
F. Preparation and submittal of operation, traffic control, and storm water pollution prevention plans, whether specified herein or required by the other agencies.
G. Obtaining and maintaining any required environmental and/or other permits and licenses.

The quantities set forth in the Proposal are used for the purpose of determining the basis of the award of the Contract, and may be increased or decreased 10% or less by the Owner to conform to the requirements of the work as set forth on the plans, and the Contractor shall agree to perform the work on the basis of the prices bid for the items contained in the Proposal regardless of whether or not the items or units are decreased or increased.

The Engineer or the Owner shall have the right to order omitted from the Contract any minor item found unnecessary to the work without violating the Contract or Performance Bond, and without any compensation to the Contractor.

To ensure the Contractor's satisfactory performance of the Contract, progress payments shall be subject to retainage pursuant to A.R.S. §34-221 in the amount of 10% of the approved estimate of the Work performed in the preceding calendar month. When the Work is 50% complete, the retainage shall be reduced to 5% so long as the Contractor is making satisfactory progress. If the Owner determines in writing that the Contractor is not making satisfactory progress at any time, the 10% retainage may be reinstated. In lieu of retainage, the Contractor may post substitute security meeting the requirements of A.R.S. §34-221.

9. HAUL ROUTE

The Contractor is to submit haul routes to the Owner for approval.

10. DUST CONTROL

The Contractor shall use all methods in the control of dust as set forth by A.R.S. §49-401 and the ADOT Standard Specifications Section 207. The cost thereof is to be included in the unit construction cost.

11. TEMPORARY CONSTRUCTION EASEMENTS

Temporary construction easements are not required for this project.

12. OWNER'S FIELD OFFICE

The Owner's field office, as called for under Section 60-05 of the General Provisions, shall not be required of the Contractor for this project.

13. BLASTING NOTIFICATION

Blasting shall not be permitted within any portion of the project at any time.

14. CONFLICTING UTILITY SYSTEMS

The Contractor shall be aware that within the project limits there are utility systems that may conflict with the proposed work. The Contractor is not responsible for resolving these conflicts unless otherwise noted within the plans. Such shall be the sole responsibility of each individual utility owner. However, the Contractor shall coordinate directly with each utility owner to insure that the work progresses and notify the Owner on all matters. A list of all known utility owner contact names and phone numbers is shown within the plans.

The Contractor shall be aware of several utility systems existing within and adjacent to the project limits. The Contractor shall be responsible for any damage to the utilities. The Contractor shall be aware of overhead utility lines along, near and crossing roadways within and/or adjacent to the project limits. The Contractor shall be responsible for any damage to any overhead utilities or their support structures.

15. DISPOSAL OF REMOVED VEGETATION OR UNSUITABLE MATERIALS

The Contractor shall dispose all removed vegetation and/or any unsuitable materials in a location as designated or approved by the Public Works Director. Disposal of said material in another location(s) shall be submitted to the OWNER for approval prior to disposal activities.

16. ARIZONA PUBLIC SERVICE

The Contractor shall be responsible for all work associated with the Arizona Public Service (APS) power line relocation as shown within the APS documents that are considered as part of the Contract for this project. C.L. Williams Consulting Inc. has located, as best as possible, the horizontal layout of the required utility trenches, however, the Contractor shall confirm the final location with APS prior to construction.

TECHNICAL SPECIFICATIONS

T-1 TO T-12

TECHNICAL SPECIFICATIONS

RUSSELL ROAD RECONSTRUCTION PROJECT
GLOBE, ARIZONA

201 CLEARING AND GRUBBING

Clearing and Grubbing shall be in accordance with Section 201 of the ADOT Standard Specifications unless modified herein.

201-1 Description: the first paragraph is revised to read:

The work under this section shall consist of removing and disposing of all vegetation, rubbish, trees, debris and other objectionable matter only from those areas required to install the proposed work unless otherwise shown on the plans or specified in the Special Provisions.

201-2 Removal of Disposal Materials: the first paragraph is revised to read:

All materials removed in clearing and grubbing shall be disposed of in locations subject to the OWNER's approval prior to said disposal. Disposal of materials within the project right-of-way or within the project limits is not permitted.

201-4 Method of Measurement: is revised to read:

No measurement shall be made for Clearing and Grubbing.

201-5 Method of Payment: first paragraph is revised to read:

The accepted quantities of clearing and grubbing, including all necessary trees, the cost thereof shall be as shown within the bid proposal.

202 REMOVAL OF STRUCTURES AND OBSTRUCTIONS

Removal of Structures and Obstructions shall be in accordance with Section 202 of the ADOT Standard Specifications unless modified herein.

203 EARTHWORK

Earthwork shall be in accordance with Section 203 of the ADOT Standard Specifications unless modified herein.

209 FURNISH WATER:

Furnish Water shall be done in accordance with Section 209 of the ADOT Standard Specifications unless modified herein.

209-1 Description: add the following paragraph.

Water shall be free of contaminants that in the opinion of the Owner or Owner's Engineer constitute a health hazard.

206-4 Method of Measurement: is revised to read:

No measurement or payment will be made for furnish water, the cost being considered as included in the cost of other contract items.

206-5 Basis of Payment: is revised to read:

No measurement or payment will be made for furnish water, the cost being considered as included in the cost of other contract items.

211 FILL CONSTRUCTION

Fill Construction shall be in accordance with Section 211 of the MAG Standard Specifications unless modified herein or stated within the plans.

301 SUBGRADE PREPARATION

Subgrade Preparation shall be in accordance with Section 301 of the MAG Standard Specifications unless modified herein or stated within the plans.

301-1 Description: the first sentence of the first paragraph is revised to read:

This section shall govern the preparation of natural or excavated areas prior to the placement of sub-base material, rock riprap, pavement, curbs and gutters, driveways, sidewalks or other structures.

301-3 Relative Compaction: add the following line:

(D) Subgrade for Rock RipRap . . . . . 85 percent

303 AGGREGATE SUBBASES AND AGGREGATE BASES

Aggregate Base Course shall be Class II in accordance with Section 303 of the ADOT Standard Specifications unless modified herein.

321 ASPHALT CONCRETE PAVEMENT

Asphaltic Concrete Pavement shall be in accordance with Section 321 of the MAG Standard Specifications unless modified herein. For Russell Road, the pavement structural section (upper section) shall require one single 3-inch lift (i.e., layer).

321-13 Payment: add the following:

The term "bituminous material" as used herein shall include asphalt cement, liquid asphalt, and emulsified asphalt.

The contract unit price for each item of bituminous material will be considered to include all costs for furnishing, hauling, handling, spreading, and mixing of the material as required, including the "initial cost" of bituminous material, but excluding any difference in the cost of bituminous material that occurs between the date of bid opening and the date that the material is used on the project.

A cost for bituminous material will be determined monthly by the Arizona Department of Transportation (herein referred to as the "Department") based on the selling prices of asphalt cement published by the Asphalt Weekly Monitor, a publication of Poten & Partners, Inc. The cost will be the arithmetic average of the high and low selling prices for asphalt cement shown in the previous four reports for the Arizona/Utah and Southern California regions.

This cost will be deemed the "initial cost" (IC) for bituminous material for projects on which bids are opened during the following month. This cost will also be deemed the "current price" (CP) for bituminous material for the following month for projects in construction.

This value will be made known by means of a memorandum issued on the last Wednesday of each month issued by Gila County.

For each item of bituminous material for which there is a specific pay item, and for the bituminous material used in Asphaltic Concrete items (pavement and friction course), an adjustment will be made as follows for each month that a quantity of bituminous material was used on the project.

The "initial cost" (IC) for the month in which the project was bid will be compared with the "current price" (CP) as specified above for the appropriate current month. The "current price" (CP) will be as shown in the memorandum issued on the last Wednesday of each month, and will be used to adjust costs for bituminous material incorporated into the job during the following month (for example; bituminous material used in May will be adjusted, as specified herein, based on the "current price" (CP) for May as shown in the memorandum issued on the last Wednesday of April). Any difference in price between these two values will be applied to the quantity of eligible bituminous material incorporated into the work.

Determination of the eligible quantities of bituminous material will be based on contractor furnished- invoices, except as modified below.

The tons of emulsified products to which the adjustment will be applicable will be the tons of the emulsified bituminous asphalt prior to dilution.

Adjustments in compensation for emulsified asphalts will be made at 60 percent of either the increase or decrease.

The tons of bituminous material incorporated in Asphaltic Concrete items (pavement and friction course) to which an adjustment will be applicable will be considered to equal five percent of the quantity, measured in tons, of Asphaltic Concrete items (pavement and friction course) placed, regardless of the actual percentage of bituminous material incorporated into the mix. If the quantity of Asphaltic Concrete items (pavement and friction course) is measured by volume, the supplemental agreement establishing the method of measurement will specify the manner in which the tons of asphalt cement eligible for the adjustment are determined.

The tons of bituminous materials which are paid for on the basis of testing by nuclear asphalt content gauge, ignition furnace, or other approved methods to which the adjustment will be applicable, are the tons which have been incorporated into the mixture.

No additional compensation will be made for any additional or increased charges, costs, expenses, taxes, etc., which the contractor may have incurred since the time of bidding and which may be the result of any increase in the "initial cost" of bituminous material.

Adjustment in unit prices of items governed by this provision will be made in the next regular monthly progress payment following actual use or application of the bituminous material.

Any adjustment in compensation made for bituminous material incorporated into the work after the expiration of the specified completion time set forth in the contract, or as may be extended in accordance with the provisions of bid document, will be on the basis of the price of bituminous material shown in the memorandum applicable on the date of the expiration of the specified completion time, as hereinbefore specified.

340 CONCRETE CURB, GUTTER, SIDEWALK, SIDEWALK RAMPS, DRIVEWAY AND ALLEY ENTRANCE

Concrete curb, gutter, sidewalk, sidewalk ramps, driveway, valley gutters and alley entrances shall be in accordance with Section 340 of the MAG Standard Specifications unless modified herein.

340-2 Materials: of the Standard Specifications add the following:

All concrete shall be color tinted using Davis-Color /mix ready/ dry/ color group standard/ San Diego Buff # 5237 mixed per the manufactures recommendations.

411 ASPHALT CONCRETE FRICITION COURSE

Asphaltic Concrete Friction Course shall be in accordance with Section 411 of the ADOT Standard Specifications unless modified herein.

411-2.05 Proportions: revised to read:

The asphalt cement content and type will be determined by the laboratory responsible for pavement mix design and will submit the recommended mix design to the Owner for approval prior to delivery and/or installation.

520 STEEL AND ALUMINUM HANDRAILS

Steel and Aluminum Handrails shall be in accordance with Section 520 of the MAG Standard Specifications unless modified herein or within the plans.

525 PNUEMATICALLY PLACED MORTAR

Pneumatically placed mortar (a.k.a. shotcrete) shall be in accordance with Section 525 of the MAG Standard Specifications unless modified herein.

525.1 Description: add the following sentence:

Concrete shall be color tinted using Davis-Color /mix Ready/ dry/ color group standard/ San Diego Buff #5237 mixed per the manufacture's recommendation.

525.6 Surface Preparation: add the following paragraph:

On sloped faces taller than 24 inches, weep holes shall be constructed at intervals of ten feet (10') midway between contraction joints on each side of the sloped shotcrete. Weep holes shall be constructed using perforated 4-inch (4") diameter, schedule 40, polyvinyl chloride (PVC) pipe. The pipe shall be cut to fit the finish slope of the sloped shotcrete face and shall be placed at an elevation of one foot (1') above the toe of the slope. The pipe perforations shall be a minimum of one (1) square inch per linear foot of pipe. The weep holes shall be backed by a minimum of two (2) cubic feet of aggregate material tied in a burlap bag. The aggregate shall extend at least six inches (6") above and below and to each side of the weep hole, and at least twenty four (24") inches into the side slope. The side and back of the burlap bag shall be protected from being coated by concrete during the placing operation by a suitable means approved by the Owner. On the day following concrete placement, each weep hole shall be rodded to assure that it has not been blocked.

525.8 Joints: the first sentence of the second paragraph is revised to read:

The Contractor shall install control joints at 10-foot spacing both vertically and horizontally.

525.11 Testing: add the following paragraph:

Shotcrete channels having a slope of 0.8 foot per hundred feet or less, or where unusual or special conditions cast doubt on the capability of the gutters to drain, shall be water tested. Water testing shall consist of establishing flow in the length of channel to be tested by supplying water from a hydrant, tank truck or other source. One hour after the supply of water is shut off, the channel shall be inspected for evidence of ponding or improper shape. In the event water is found ponded in the channel to a depth greater than ½ inch, the defect or defects shall be corrected in a manner acceptable to the Engineer without additional cost to the Owner.

607 ROADSIDE SIGN SUPPORTS

Roadside Sign Supports shall be in accordance with Section 607 of the ADOT Standard Specifications unless modified herein.

608 SIGN PANELS

Sign Panels shall be in accordance with Section 608 of the ADOT Standard Specifications unless modified herein. Unless otherwise noted within the plans all sheeting shall be per ADOT Traffic Engineering PGP, Section 380, latest edition.

621 CORRUGATED METAL PIPE AND ARCHES

Corrugated Metal Pipe and Arches shall be in accordance with Section 621 of the MAG Standard Specifications unless modified herein.

701 MAINTENANCE AND PROTECTION OF TRAFFIC

Maintenance and Protection of Traffic shall be in accordance with Section 701 of the ADOT Standard Specifications, except as modified herein.

701-1 Description: add the following:

Prior to construction, the Contractor shall close Russell Road, between Roberts Road and Besich Boulevard, to all through traffic. Local access shall be maintained during the roadway closure. Through traffic shall only be allowed after the final surface course (i.e., ACFC) has been installed and accepted by the Owner.

701-3.08 Changeable Message Board: the first sentence of the first paragraph is revised to read:

The Contractor shall furnish two message boards to be placed in a location(s) as designated by the Owner prior to construction and relocated during construction as required by the Owner.

708 PAINTED PAVEMENT MARKINGS

Painted Pavement Markings shall be in accordance with Section 708 of the ADOT Standard Specifications unless modified herein.

760 COATING CORRUGATED METAL PIPE AND ARCHES

Coating Corrugated Metal Pipe and Arches shall be in accordance with Section 760 of the MAG Standard Specifications unless modified herein.

760-1 General: the last sentence is revised to read:

The size and type of the pipe to be furnished shall be as specified on the project plans. The thickness of all pipe, unless otherwise states within the project plans, shall be 0.064 inches.

810 EROSION CONTROL AND POLLUTION PREVENTION (SWPPP)

An Erosion Control and Pollution Prevention Plan shall be required for this project as the estimated disturbed area is equal to or greater than 43,560 square feet.

Erosion Control shall be in accordance with Section 810, Erosion Control and Pollution Prevention, of the ADOT Standard Specifications, unless modified herein and shall be known as SWPPP herein.

810-1 Description: is revised to read:

The Contractor is required to prepare and submit a Storm Water Pollution Prevention Plan (SWPPP) and an Arizona Pollutant Discharge Elimination System (AzPDES) permit to the Arizona Department of Environmental Quality and provide the Owner with a copy of all correspondence demonstrating that all requirements and approval to begin the work has been met.

All work specified in this subsection will be temporary for use during construction, unless designated otherwise.

The Contractor shall be responsible for maintaining all erosion and pollution control devices in proper functioning condition at all times during Construction. After completion and final approval of construction activities the Owner shall be responsible for maintaining all erosion and pollution control devices.

When deficiencies in the erosion control devices or other elements of work listed herein are noted by inspection or other observation, specified corrections shall be made by the contractor by the end of the day or work shift, or as directed by the Engineer.

Work specified herein which is lost, destroyed, or deemed unacceptable by the Engineer as a result of the Contractor's operations shall be replaced. Work specified herein which is lost or destroyed, as a result of natural events, such as excessive rainfall, shall be replaced by the Contractor.

In cases of serious or willful disregard for the protection of the waters of the U.S. and/or natural surroundings by the contractor, the Engineer will immediately notify the Contractor of such non-compliance.

810-2.03 Riprap and Rock Mulch: is revised to read:

Rock check dams or similar methods using rock rip rap or rock mulch shall not be used for erosion control methods on this project. The Contractor shall employ the methods as described within Section 810-2.02 of the ADOT Standard Specifications.

810-4 Method of Measurement: is revised to read:

No measurement shall be made for Erosion Control and Pollution Prevention (SWPPP). The contract unit of measurement shall be lump sum.

810-5 Basis of Payment: is revised to read:

Payment for Erosion Control and Pollution Prevention (SWPPP) shall be lump sum and shall be full compensation for work necessary to complete said Erosion Control and Pollution Prevention (SWPPP) including all necessary permits, plans, and documentation.

901 MOBILIZATION

Mobilization shall be in accordance with Section 901 of the ADOT Standard Specifications.

902 CHAIN LINK FENCE

Chain Link Fence and Gates shall be in accordance with Section 420 of the MAG Standard Specifications.

909 SURVEY MARKER

Survey Markers shall not be required to be installed for this project unless otherwise noted within the plans.

913 BANK PROTECTION

Bank Protection shall be in accordance with Section 913 of the ADOT Standard Specifications unless modified herein.

913-2.02 (A) Wire Fabric: the first sentence of the third paragraph is revised read:

Woven wire fabric for use in gabion baskets and mattresses shall be in accordance with ASTM A975; double-twisted hexagonal mesh pattern, all wire including lacing wire shall have a tensile strength of no more than 75,000 psi in accordance with ASTM A 641, wire diameter shall be 0.120 in., mesh opening 3-¼".

914 WALLS AND MISCELLANEOUS STRUCTURES

Walls shall be in accordance with Section 914 of the ADOT Standard Specifications.

924 CONTRACTOR QUALITY CONTROL:

924-1 Description:

The work under this section shall consist of furnishing all personnel, materials, supplies, facilities and equipment necessary to perform all certification of test equipment, sampling, testing, and other control actions. The work shall also include the preparation of linear control charts, Weekly Quality Control Reports, and other reports and records as described in Subsection 106.04(C) of the ADOT Specifications.

924-2 Method of Measurement:

Contractor quality control will be measured for payment on a lump sum basis as a single unit of work.

924-3 Basis of Payment:

Contractor quality control will be measured for payment on a lump sum basis as a single unit of work.

924-3.1 General:

The accepted quantities of contractor quality control, measured as provided above, will be paid at the contract lump sum price, which price shall be full compensation for the work, complete, as described and specified herein.

Partial payments under this item will be made in accordance with the following provisions:

(a) The first partial payment price will not exceed of twenty five percent of the contract lump sum price for contractor quality control.

(b) The remaining portion of the lump sum price will be prorated over the duration of the original contract on a monthly basis, and monthly progress payments will be made.

925 CONSTRUCTION SURVEYING AND LAYOUT AND AS-BUILT DRAWINGS:

Construction Surveying and Layout shall be in accordance with Section 925 of the ADOT Standard Specifications, except as modified herein.

925-1.01 As-Builts: add the following section:

Upon completion of the work, the Contractor shall perform an as-built survey of all portions of the work including but not limited to; pavements: centerline and edges where superelevation occurs; masonry walls: the alignment and elevation of all concrete footings for wall(s); beginning of top of wall, all changes in the footer and/or top of wall elevation change, changes in horizontal direction of the wall (i.e., angle points) and all points necessary to locate all concrete and other related work as shown within the plans (e.g., headwalls, sidewalk, ramps including but not limited to changes in elevation, curbing, gutter flowline, concrete stairs, pavement, handrails...etc.), guardrail, pavement along all mainline roadways (i.e., not including driveway features), all culvert pipe including at driveways, storm drain systems,....etc. The survey work shall be performed and certified by an Arizona registered Professional Land Surveyor. Datum of the survey shall be based on the benchmark information as shown on the Project Plans. Three (3) sets of the signed and sealed survey document shall be submitted to the Engineer for review and approval. As-built drawings shall also contain the following.

A. The as-built drawings shall indicate in a neat and accurate manner all changes and revisions in the original design which affect the permanent structures and which exist in the completed work. All underground utilities relocated under this contract shall be referenced to semi-permanent or permanent physical objects.

B. The alterations and references shall be made with colored ink and shall be sufficiently clear and complete to enable reproducing these changes on the original tracings. The Engineer will document these changes on the original tracings and forward the tracings to the Contractor for review and signature. The registered Professional Land Surveyor who performed the Final Survey shall certify the As-Built information by signing and sealing the tracings for the Contractor.

Final payment of this contract will not be made to the Contractor until the As-Built drawings are satisfactorily produced and certified.

C. As-Built conditions shall be kept current. They shall be inspected for accuracy and completeness monthly. The Contractor shall certify on his monthly payment requisition that the drawings are accurate and complete before the monthly payment estimate will be prepared and approved.

925-4 Method of Measurement: is revised to read:

No measurement shall be made for Construction Survey and Layout and As-Builts. The contract unit of measurement shall be lump sum.

925-5 Basis of Payment: is revised to read:

Payment for Construction Survey and Layout and As-Builts shall be lump sum and shall be full compensation for all work necessary to complete said Construction Survey and Layout and As-builts.

*Contract Forms are a binding part of
Informal Bid Documents and Awarded Contract.*

CONTRACT FORMS

Proposal	P-1 to P-3
Bidding Schedule	BS-1 to BS-6
Bid Bond	BB-1
Qualification & Certification	QC-1 to QC-2
Reference List	RL-1
Affidavit of Non-Collusion	ANC-1
Subcontractor Certification	SC-1
Checklist & Addenda Acknowledgment	CK-1
Contract	C-1 to C-7
Contract Performance Bond	CPB-1
Labor and Materials Bond	LMB-1
Contract Performance Warranty	CPW-1
IRS W-9 Form	W-9

PROPOSAL

TO THE GILA COUNTY PUBLIC WORKS DIVISION:

Gentlemen:

The following Proposal is made for **BID NO. 032712-1, RUSSELL ROAD RECONSTRUCTION PROJECT, GLOBE, ARIZONA**, in the County of Gila in the State of Arizona.

The following Proposal is made on behalf of

_____

_____

_____

and no others. The Proposal is in all respects fair and is made without collusion on the part of any person, firm or corporation mentioned above, and no member or employee of Gila County is personally or financially interested, directly or indirectly, in the Proposal, or in any purchase or sale of any materials or supplies for the work to which it relates, or in any portion of the profits thereof.

The undersigned certifies that the approved Plans, Technical Specifications, General and Special Provisions and forms of Contract and Bond authorized by Gila County and constituting essential parts of this Proposal, have been carefully examined, and also that the site of the work has been personally inspected. The undersigned declares that the amount and nature of the work to be done is understood and that at no time will misunderstanding of the Plans, Technical Specifications, General Provisions, Special Provisions, or conditions to be overcome, be plead. On the basis of Plans, Technical Specifications, General and Special Provisions, each Addendum (if any) and the forms of Contract and Bond proposed for use, the undersigned proposes to furnish all the necessary equipment, materials, machinery, tools, apparatus, and other means of construction, and labor, to do all the work in the manner specified and to finish the entire project within the time hereinafter proposed, and to accept, as full compensation therefore, the sum of the various products obtained by multiplying each unit price, herein bid for the work or materials on the attached Bidding Schedule, by the quantity thereof actually incorporated in the complete project, as determined by the Public Works Director. The undersigned understands that the quantities mentioned herein are approximate only and are subject to increase or decrease and hereby proposes to perform all quantities of work as either increased or decreased, in accordance with the provisions of the Specifications, at the unit price bid in the attached Bidding Schedule.

The undersigned further proposes to perform all extra work that may be required on the basis provided in the Specifications and to give such work personal attention and to secure economical performance.

Proposal continued...

The undersigned further proposes to execute the Contract Agreement and furnish satisfactory Bonds within ten (10) calendar days from the date of Notice of Award, time being of the essence. The undersigned further proposes to begin work as specified in the contract attached hereto, and to complete the work **Within One Hundred and Twenty (120) Calendar Days of the Notice to Proceed**, and maintain at all times a Payment Bond and Performance, Labor and Material Bonds, approved by the Public Works Director, in an amount equal to one hundred (100%) percent of the total bid. These bonds shall serve not only to guarantee the completion of the work on the part of the undersigned, but also to guarantee the excellence of both workmanship and material and the payment of all obligations incurred, until the work is finally accepted and the provisions of the Plans, Standard Specifications and Special Provisions fulfilled.

A Proposal Guaranty in the amount and character named in the Call for Bids is enclosed amounting to not less than ten (10%) percent of the total bid, which Proposal Guaranty is submitted as a guaranty of the good faith of the bidder and that the bidder will enter into written contract, as provided, to do the work, if successful in securing the award thereof, and it is hereby agreed that if at any time other than as provided in the Proposal requirements and conditions the undersigned should withdraw this Proposal, or if the Proposal is accepted and there should be failure on the part of the undersigned to execute the Contract and furnish satisfactory Bond as herein provided, Gila County, in either of such events, shall be entitled and is hereby given the right to retain the said Proposal Guaranty as liquidated damages.

If by a Corporation:

(SEAL)

Corporate Name:_____

Corporate Address:_____

Incorporated under the laws of the State of:_____

By (Signature):_____ **Date:**_____

President:_____

Secretary:_____

Treasurer:_____

If by a Firm or Partnership:

Firm or Partnership Name:_____

Proposal continued...

Firm or Partnership Address:_____

By (Signature):_____ **Date:**_____

Name and Address of Each Member:_____

_____

_____

_____

_____

If by an Individual:

Signature:_____ **Date:**_____

BIDDING SCHEDULE

RUSSELL ROAD RECONSTRUCTION PROJECT
GILA COUNTY, ARIZONA

We agree to provide all work and material necessary to complete the project as shown on the plans and specifications for the following Contract Price:

Firm Name: _____

TOTAL CONTRACT PRICE, for the sum of $ _____

WRITTEN TOTAL CONTRACT PRICE

_____**Dollars**

and _____**Cents.**

This Contract Price is based upon the Bidder's quantities and unit prices tabulated on Pages BS-2 through BS-4 of the Proposal. The Bidder agrees that the Contract Price will be payment in full for all work shown on the plans and described in the Contract Documents.

Any authorized increases or decreases to the work shall be authorized by Change Order. The Contract Price shall be increased or decreased by the amount of work or material increased or decreased at the following Bid Unit Prices.

BIDDING SCHEDULE

Firm Name: _____

COST SUMMARY BREAK DOWN ROADWAY ITEMS

ITEM	DESCRIPTION	UNIT	ESTIMATED QUANTITIES	UNIT PRICE	EXTENDED AMOUNT
202	Removal of Structures and Obstructions	L.S.	1		
203	Earthwork	L.S.	2,640		
211	Fill Construction	L.S.	1,370		
301	Subgrade Preparation	S.Y.	11,864		
310	Aggregate Base Course - (ADOT Class II)	C.Y.	2,310		
321	Asphaltic Concrete - MAG (3/4") Mix	Ton	1,343		
340.1	Concrete Parking Block	EA.	30		
340.2	Concrete Sidewalk	S.F.	893		
340.3	Concrete Headwall, ADOT B-11.11, for (4) 42" CMPA	L.S.	1		
411	Asphaltic Concrete Friction Course	Ton	147		
520	Pedestrian Handrail	L.F.	88		
525	Shotcrete (MAG 525)(4" thick, 6x6x10 WWF)(colored)	S.F.	5,810		
621	Pipe, Corrugated Metal, 42"	LF	312		
607.2	New Sign Panel, STOP, R1-1, 30"x30"	EA.	2		
607.6	New Sign Panel, SPEED LIMIT 35, R2-1, 24"x30"	EA.	4		
701	Maintenance and Protection of Traffic	L.S.	1		
708.1	Permanent Pavement Marking (Painted)(White)(4" Equiv)	L.F.	3,918		

COST SUMMARY BREAK DOWN ROADWAY ITEMS *continued*

Firm Name:

ITEM	DESCRIPTION	UNIT	ESTIMATED QUANTITIES	UNIT PRICE	EXTENDED AMOUNT
708.2	Permanent Pavement Marking (Painted)(Yellow)(4" Equiv)	L.F.	4,899		
708.3	Permanent Pavement Marking (Thremoplastic)(ARROW)	L.F.	2		
708.4	Permanent Pavement Marking (Thremoplastic)(ONLY)	L.F.	2		
732.1	Trenching and Backfill (for utility relocation), Type F	L.F.	975		
732.12	Trenching, Encasement and Backfill (for utility relocation), Type F	L.F.	65		
732.2	Trenching and Backfill (for utility relocation), Type FP	L.F.	100		
732.3	Trenching and Backfill (for utility relocation), Type P	L.F.	195		
732.4	Trenching and Backfill (for utility relocation), Type S	L.F.	250		
733	Misc. APS Relocation Work	L.S.	1		
808.1	Pipe, Ductile Iron (6"Class 350)	L.F.	50		
808.2	Waterline Encasement, 16" Casing Pipe (AWC E-9-24-1)	L.F.	24		
808.3	45° Bend, Ductile Iron & Joint Restraint, 6"	EA.	4		
810	Erosion Control and Pollution Prevention Plan (SWPPP)	L.S.	1		
900	Mailbox Support System	L.S.	1		
901	Mobilization	L.S.	1		
902.2	Chain Link Fence, H=6', Security Type	L.F.	329		
902.3	Chain Link Fence, H=6', Non-security	L.F.	74		
902.4	Chain Link Fence, Gate, Double Swing, W=28', Secuirty Type	EA.	1.5		
902.5	Chain Link Fence, Roll Gate, Single, W=14'	EA.	1		
913	Dumped RipRap, D_{50}=6"	C.Y.	88		

COST SUMMARY BREAK DOWN ROADWAY ITEMS *continued*

Firm Name:

ITEM	DESCRIPTION	UNIT	ESTIMATED QUANTITIES	UNIT PRICE	EXTENDED AMOUNT
913	Dumped RipRap, D_{50}=12"	C.Y.	326		
913	Gabion Baskets	C.Y.	48		
913.1	Gabion Mattress (12" deep)	C.Y.	24		
914*	Masonry Wall, ADOT Std.	S.F.	6,241		
924	Contractor Quality Control	L.S.	1		
925	Construction Survey and Layout and As-builts	L.S.	1		
				Total Base Bid	

*wall items are measured in square foot of the face of wall

GILA COUNTY

SURETY (BID) BOND

(Penalty of this bond must not be less than 10% of the bid amount)

KNOW ALL MEN BY THESE PRESENTS, that we, the undersigned _____,

as Principal, hereinafter called the Principal, and _____,

a corporation duly organized under the laws of the State of _____,

as Surety, hereinafter called the Surety, holding a certificate of authority to transact surety business in this State issued by the Director of the Department of Insurance, are held and firmly bound unto Gila County as Obligee, hereinafter called the Obligee, in the sum of ten percent (10%) of the amount bid, submitted by Principal to Gila County for the work described below, for the payment of which sum well and truly to be made, the said Principal and the said Surety bind ourselves, our heirs, executors, administrators, successors, and assigns, jointly and severally, firmly by these presents.

WHEREAS, the Principal is herewith submitting its proposal for:

BID NO. 032712-1, RUSSELL ROAD RECONSTRUCTION PROJECT, GLOBE

NOW THEREFORE, if the Obligee, acting by and through its Public Works Director, accepts the proposal of the Principal and the Principal shall enter into contract with the Obligee in accordance with the terms of such proposal, and give such bonds and certificates of insurance as may be specified in the contract documents with good and sufficient surety for the faithful performance of such contract and for the prompt payment of labor and material furnished in the prosecution thereof, or in the event of the failure of the Principal to enter into such contract and give such bonds and certificates of insurance, if the Principal shall pay to the Obligee the difference not to exceed the penalty of the bond between the amount specified in the proposal and such larger amount for which the Obligee may in good faith contract with another party to perform the work covered by the proposal then this obligation is void. Otherwise, it remains in full force and effect provided, however, that this bond is executed pursuant to the provisions of ARS '34-201, and all liabilities on this bond shall be determined in accordance with the provisions of the section to the extent as if it were copied at length herein.

IN WITNESS WHEREOF, we hereunto set our hands and seals:

Principal

By

Title

Surety

By Attorney-in-Fact

Address, Attorney-in-Fact
Subscribed and sworn to before me
this ____ day of _____, 20____

My commission expires: _____

Notary Public

GILA COUNTY

QUALIFICATION AND CERTIFICATION FORMS

Purpose

This exhibit shall serve as a requirement to enable the evaluation team to assess the qualifications of Contractors under consideration for final award.

The information may or may not be a determining factor in award.

Contract Number 032712-1 RUSSELL ROAD RECONSTRUCTION PROJECT

The applicant submitting this Bid warrants the following:

1. Name, Address, Email Address and Telephone Number of Principal Contractor:

   _____

   _____

   _____

2. Had Contractor (under its present or any previous name) ever failed to complete a contract?
   _____Yes _____No. If "Yes, give details, including the date, the contracting agency, and the reasons Contractor failed to perform in the narrative part of this Contract.

3. Has Contractor (under its present or any previous name) ever been disbarred or prohibited from competing for a contract? _____Yes _____No. If "Yes", give details, including the date, the contracting agency, the reasons for the Contractors disqualification, and whether this disqualification remains in effect in the narrative part of this Contract.

4. Has a contracting agency ever terminated a contract with Contractor prior to contract expiration date (under your firm's present or any previous name)? _____Yes _____No. If "Yes", give details including the date, the contracting agency, and the reasons Contractor was terminated in the narrative part of this Contract.

5. Contractor must also provide at least the following information:
   a. A brief history of the Contractors Firm.
   b. A Cost Proposal shall be submitted on the Price Sheet, attached hereon and made a full part of this contract by this reference.
   c. A list of previous and current customers, which are considered identical or similar to the Scope of Work described herein; shall be submitted on the Reference List, attached hereon and made a full part of this contract by this reference.

d. List of any subcontractors (if applicable) to be used in performing the service must accompany the Proposal. The subcontractors Arizona ROC, contact name and phone # must be included.

e. List the specific qualifications the Contractor has in supplying the specified services.

f. Gila County reserves the right to request additional information.

6. **Contractor Experience Modifier (e-mod) Rating in Arizona:** _____
A method the National Council on Compensation Insurance (NCCI) uses to measure a business' computed loss ratio and determine a factor, which when multiplied by premium, can reward policyholders with lower losses. E-mod rate may be a determining factor in bid award.

7. **Current Arizona Contractor License Number:** _____

_____
Signature of Authorized Representative

_____
Printed Name

_____
Title

GILA COUNTY

REFERENCE LIST

These references are required to enable the evaluation team to assess the qualifications of the Contractor under consideration for final award. The information may be a determining factor in award.

References

Please list a minimum of four (4) references for projects of similar size and scope as this Invitation for Bids during the past twelve (12) months, in or as close to Gila County as possible.

1. **Company:** _____

   Contact: _____

   Phone: _____

   Address: _____

2. **Company:** _____

   Contact: _____

   Phone: _____

   Address: _____

3. **Company:** _____

   Contact: _____

   Phone: _____

   Address: _____

4. **Company:** _____

   Contact: _____

   Phone: _____

   Address: _____

_____

Name of Business

_____

Signature of Authorized Representative

_____

Title

AFFIDAVIT BY CONTRACTOR
CERTIFYING THAT THERE WAS NO COLLUSION IN BIDDING FOR CONTRACT

STATE OF ARIZONA)
)ss
COUNTY OF:)

_____
(Name of Individual)
being first duly sworn, deposes and says:

That he is _____
(Title)
of_____ and
(Name of Business)

That he is properly prequalified by Gila County for bidding on **BID NO. 032712-1 RUSSELL ROAD RECONSTRUCTION PROJECT, GLOBE, ARIZONA** and,

That pursuant to Section 112 (C) of Title 23 USC, he certifies as follows:

That neither he nor anyone associated with the said _____

_____
(Name of Business)

has, directly or indirectly entered into any agreement, participated in any collusion or otherwise taken any action in restraint of free competitive bidding in connection with the above mentioned project.

_____
Name of Business

_____
By

_____
Title

Subscribed and sworn to before me this _____ day of _____, 20_____.

_____ **My Commission expires:**
Notary Public

GILA COUNTY
CERTIFICATION: INTENTIONS CONCERNING SUBCONTRACTING

At the time of the submission of bids for **BID NO. 032712-1 RUSSELL ROAD RECONSTRUCTION PROJECT, GLOBE, ARIZONA**, my intention concerning subcontracting a portion of the work is as indicated below.

In indicating that it is my intention to subcontract a portion of the work, this will acknowledge that such subcontractors will be identified and approved by the Engineer prior to award of the contract; and that documentation, such as copies of letters, requests for quotations, quotations, etc., substantiating the actions taken and the responses to such actions is on file and available for review.

A list of any subcontractors (if applicable) to be used in performing the service must accompany the Bid. The list must include the subcontractors name, address, and phone number.

Any subcontractor not listed with the bid must be approved by the County prior to providing any work pursuant to this contract. Further, contractor warrants that all subcontractors will comply with all terms and conditions of this contract. The County reserves the right to terminate the contract if the contractor fails to comply with the provisions of this certification.

Yes ☐ it is my intention to subcontract a portion of the work.

No ☐ it is not my intention to subcontract a portion of the work.

_____
Name of Business

_____
Signature of Authorized Representative

_____
Title

BIDDERS CHECKLIST

NOTICE IS HEREBY GIVEN that all Bid Documents shall be completed and/or executed and submitted with this bid. If bidder fails to complete and/or execute any portion of the Bid Documents, this bid will be determined to be "non-responsive" and rejected.

CHECKLIST:

REQUIRED DOCUMENT	COMPLETED/EXECUTED
Proposal	_____
Bidding Schedule	_____
Surety (Bid) Bond	_____
Qualification & Certification Form	_____
Reference List	_____
Affidavit of Non-Collusion	_____
Subcontractor Certification	_____
Contract	_____
Bidders Checklist & Addenda Acknowledgment	_____

ACKNOWLEDGMENT OF RECEIPT OF ADDENDA:

	#1	#2	#3	#4	#5
Initials/ Date	_____	_____	_____	_____	_____

Signed and dated this _____ day of_____, 2012.

_____
CONTRACTOR:

_____
BY:

Each proposal shall be sealed in an envelope addressed to Gila County Purchasing Department and bearing the following statement on the outside of the envelope: **Proposal to Construct: RUSSELL ROAD RECONSTRUCTION PROJECT, Gila County Arizona, Bid No. 032712-1**. All proposals shall be filed at **Gila County Procurement, 1400 E. Ash St., Globe, AZ 85501**, on or before **Tuesday, August 28th, 2012, 11:00 a.m.**

GILA COUNTY
CONTRACT NO. 032712-1

THIS AGREEMENT, made and entered into this _____ day of _____, **2012**, by and between Gila County, a political subdivision of the State of Arizona, party of the first part, hereinafter designated the **OWNER**, and _____ of the City of _____, County of _____, State of Arizona, party of the second part, hereinafter designated the **CONTRACTOR**.

WITNESSETH: That the said **Contractor**, for and in consideration of the sum to be paid him by the said **Owner**, in the manner and at the time hereinafter provided, and of the other covenants and agreements herein contained, and under the penalties expressed in the bond hereto attached, hereby agrees, for himself, his heirs, administrators, successors, and assigns as follows:

ARTICLE I - SCOPE OF WORK: The **Contractor** shall furnish any and all plant materials, labor, construction equipment, and services, required for performing all work for construction for **Bid No. 032712-1 RUSSELL ROAD RECONSTRUCTION PROJECT, GLOBE, ARIZONA** in accordance with the plans and these specifications, and to completely and totally construct the same and install the material herein for the **Owner**, in a good and workmanlike and substantial manner and to the satisfaction of the **Owner** through its Engineers and under the direction and supervision of the Engineer, or his properly authorized agents and strictly pursuant to and in conformity with the Specifications prepared by the Engineers for the **Owner**, and with such modifications of the same and other documents that may be made by the **Owner** through the Engineer, or his properly authorized agents, as provided herein. Once the Bid has been awarded the bid number 032204-1 will become the Contract Number.

ARTICLE II - CONTRACT DOCUMENTS: The attached "Call for Bids", "Technical Specifications", "General Provisions", "Special Provisions", "Proposal", "Bidding Schedule", "Bid Bond", "Qualification & Certification Forms", "Reference List", "Affidavit of Non-Collusion", "Subcontractor Certification", "Employment Laws Acknowledgment", "Checklist & Addenda Acknowledgment", "Performance Bond", "Labor and Materials Bond", "Contract Performance Bond", and Plans thereto, if any, are by this reference made a part of this Contract to the same extent as if set forth herein in full. In the event of any conflict or any inconsistency in the documents, controlling weight shall be assigned in the following order: the Contract; the Technical Specifications; the Special Provisions; the General Provisions; all other documents. Contract is considered invalid unless signed by the Gila County Board of Supervisors.

ARTICLE III – SAFETY AND LOSS CONTROL: The Gila County Safety and Loss Control booklet must be read and signed by all working at the job site.

During the pre-construction meeting a time will be set for the Gila County QA/QC Safety Compliance Officer for a safety meeting. For every safety meeting the Contractor shall invite the QA/QC Safety Compliance Officer and shall give at least a twenty-four (24) hour notice.

ARTICLE IV – INDEMNIFICATION CLAUSE: The Contractor agrees to indemnify and save harmless the County of Gila, its officers, agents and employees, and any jurisdiction or agency issuing permits for any work included in the project, their officers, agents and employees, hereinafter referred to as indemnitee, from all suits and claims, including attorney's fees and cost of litigation, actions, loss, damage, expense, cost or claims of any character or any nature arising out of the work done in fulfillment of the terms of this Contract or on account of any act, claim or amount arising or recovered under workers' compensation law or arising out of the failure of the Contractor to conform to any statutes, ordinances, regulation, law or court decree. It is agreed that the Contractor will be responsible for primary loss investigation, defense and judgment costs where this contract of indemnity applies. In consideration of the award of this contract, the Contractor agrees to waive all rights of subrogation against the County, its officers, officials, agents and employees for losses arising from the work performed by the Contractor for the County.

ARTICLE V – INSURANCE REQUIREMENTS: Contractor and subcontractors shall procure and maintain until all of their obligations have been discharged, including any warranty periods under this Contract are satisfied, insurance against claims for injury to persons or damage to property which may arise from or in connection with the performance of the work hereunder by the Contractor, his agents, representatives, employees or subcontractors.

The insurance requirements herein are minimum requirements for this Contract and in no way limit the indemnity covenants contained in this Contract.

The County in no way warrants that the minimum limits contained herein are sufficient to protect the Contractor from liabilities that might arise out of the performance of the work under this Contract by the Contractor, his agents, representatives, employees, or subcontractors. Contractor is free to purchase such additional insurance as may be determined necessary.

A. **MINIMUM SCOPE AND LIMITS OF INSURANCE** - Contractor shall provide coverage with limits of liability not less than those stated below:

1. **Commercial General Liability – Occurrence Form**
   Policy shall include bodily injury, property damage, broad form contractual liability and XCU coverage.
   - General Aggregate $2,000,000
   - Products – Completed Operations Aggregate $1,000,000
   - Personal and Advertising Injury $1,000,000
   - Each Occurrence $1,000,000

   a. The policy shall be endorsed to include the following additional insured language: **"The County of Gila shall be named as an additional insured with respect to**

liability arising out of the activities performed by, or on behalf of the Contractor".

2. **Automobile Liability**
   Bodily injury and property damage for any owned, hired, and non-owned vehicles used in the performance of this Contract.

Combined Single Limit (CSL)	$1,000,000

   a. The policy shall be endorsed to include the following additional insured language: **"The County of Gila shall be named as an additional insured with respect to liability arising out of the activities performed by, or on behalf of the Contractor, including automobiles owned, leased, hired or borrowed by the Contractor".**

3. **Worker's Compensation and Employers' Liability**

Workers' Compensation	Statutory
Employers' Liability	
Each Accident	$100,000
Disease – Each Employee	$100,000
Disease – Policy Limit	$500,000

   a. Policy shall contain a **waiver of subrogation** against the County of Gila.

B. **ADDITIONAL INSURANCE REQUIREMENTS:** The policies shall include, or be endorsed to include, the following provisions:

1. On insurance policies where the County of Gila is named as an additional insured, the County of Gila shall be an additional insured to the full limits of liability purchased by the Contractor even if those limits of liability are in excess of those required by this Contract.
2. The Contractor's insurance coverage shall be primary insurance and non-contributory with respect to all other available sources.
3. Coverage provided by the Contractor shall not be limited to the liability assumed under the indemnification provisions of this Contract.

C. **NOTICE OF CANCELLATION:** Each insurance policy required by the insurance provisions of this Contract shall provide the required coverage and shall not be suspended, voided, canceled, reduced in coverage or endorsed to lower limits except after thirty (30) days prior written notice has been given to the County. Such notice shall be sent directly to the **Gila County Purchasing Department, 1400 E. Ash St., Globe, AZ 85501** and shall be sent by certified mail, return receipt requested.

D. **ACCEPTABILITY OF INSURERS:** Insurance is to be placed with insurers duly licensed or approved unlicensed companies in the state of Arizona and with an "A.M. Best" rating of not less than B+ VI. The County in no way warrants that the above-required minimum insurer rating is sufficient to protect the Contractor from potential insurer insolvency.

E. **VERIFICATION OF COVERAGE:** Contractor shall furnish the County with certificates of insurance (ACORD form or equivalent approved by the County) as required by this Contract.

The certificates for each insurance policy are to be signed by a person authorized by that insurer to bind coverage on its behalf.

All certificates and endorsements are to be received and approved by the County before work commences. Each insurance policy required by this Contract must be in effect at or prior to commencement of work under this Contract and remain in effect for the duration of the project. Failure to maintain the insurance policies as required by this Contract or to provide evidence of renewal is a material breach of contract.

All certificates required by this Contract shall be sent directly to the **Gila County Purchasing Department, 1400 E. Ash St., Globe, AZ 85501**. The County project/contract number and project description shall be noted on the certificate of insurance. The County reserves the right to require complete, certified copies of all insurance policies required by this Contract at any time.

F. **SUBCONTRACTORS:** Contractors' certificate(s) shall include all subcontractors as additional insured's under its policies **or** Contractor shall furnish to the County separate certificates and endorsements for each subcontractor. All coverage's for subcontractors shall be subject to the minimum requirements identified above.

G. **APPROVAL:** Any modification or variation from the insurance requirements in this Contract shall be made by the County Attorney, whose decision shall be final. Such action will not require a formal Contract amendment, but may be made by administrative action.

ARTICLE VI - TIME OF COMPLETION: The Contractor further covenants and agrees, at his own proper cost and expense, to do all work and furnish all materials, labor, construction equipment, and services for performing all of the work for construction of said improvements and to completely construct the same and install the material therein, as called for by this agreement free and clear of all claims, liens, and charges whatsoever, in the manner and under the conditions specified within the time, or times, stated in the Proposal.

Work on this project shall start within **no later than ten (10) Days of the Notice To Proceed,** and shall be completed within the following limits:

SCHEDULE:

For construction in the contract documents, the project shall be completed within **One Hundred and Twenty (120) Days of the Notice To Proceed.**

It is expressly understood and agreed that in case of failure on the part of the Contractor, for any reason, except with the written consent of the Engineer, to complete the work to the satisfaction of the Engineer and within the aforesaid time limits, the Owner may deduct from any money due, or which may become due the Contractor, as liquidated damages, an amount as fixed by the following schedule:

WORK ITEM	DAILY CHARGE PER CALENDAR DAY
All work not complete within the above specified time after start of work.	$840.00

If no money shall be due the Contractor, the Owner shall have a cause of action to recover against the Contractor in a court of competent jurisdiction, liquidated damages as fixed by the above schedule; said deduction to be made, or said sum to be recovered, not as a penalty, but as liquidated damages; provided, however, that upon receipt of written notice from the Contractor, of the existence of causes, as herein provided, over which said Contractor has no control and which must delay the completion of the said work or any delay occasioned by the Owner, the Engineer may extend the period hereinafter specified for the completion of said work in accordance with the specifications and in such case, the Contractor shall become liable for said liquidated damages for delays commencing from date said extension period shall expire.

ARTICLE VII - CANCELLATION: This agreement is subject to cancellation pursuant to **A.R.S. §38-511** and **GENERAL PROVISION 80-09 DEFAULT AND TERMINATION OF CONTRACT.**

ARTICLE VIII - PAYMENTS: The Contractor shall make an estimate of the work performed during the preceding month and submit the same to the Engineer for checking. On or before ***thirty (30) days*** after the certified and approved estimate of the work is received by the Owner, the Owner shall pay to the Contractor ninety percent (90%) of the value of said work in place, as approved by the Engineer. The balance of ten percent (10%) of the estimate shall be retained by the Owner until the time of final payment and acceptance of said work, as per **A.R.S. §34-221(A)(2).**

In order to receive payment the Contractor shall have a current W-9 Form on file with the County unless required by law.

All invoices submitted by the Contractor shall include at least the following but not be limited to:

- Purchase Order Number
- Contract Number
- Project Title
- Invoice Number
- Vendor Name and Address
- Description of Service

ARTICLE IX – LAWS AND ORDINANCES: This agreement shall be enforced under the laws of the State of Arizona. The Contractor shall maintain in current status all Federal, State, and Local licenses and permits required for the operation of the business conducted by the Contractor.

The **Contractor** shall comply with the applicable provisions of the Americans with Disabilities Act **(Public Law 101-336, 42 U.S.C. 12101-12213)** and applicable Federal regulations under the Act.

ARTICLE X – LEGAL ARIZONA WORKERS ACT COMPLIANCE: Contractor hereby warrants that it will at all times during the term of this Contract comply with all federal immigration laws applicable to Contractor's employment of its employees, and with the requirements of A.R.S. § 23-214 (A) (together the "State and Federal Immigration Laws"). Contractor shall further ensure that each subcontractor who performs any work for Contractor under this contract likewise complies with the State and Federal Immigration Laws.

County shall have the right at any time to inspect the books and records of Contractor and any subcontractor in order to verify such party's compliance with the State and Federal Immigration Laws.

Any breach of Contractor's or any subcontractor's warranty of compliance with the State and Federal Immigration Laws, or of any other provision of this section, shall be deemed to be a material breach of this Contract subjecting Contractor to penalties up to and including suspension or termination of this Contract. If the breach is by a subcontractor, and the subcontract is suspended or terminated as a result, Contractor shall be required to take such steps as may be necessary to either self-perform the services that would have been provided under the subcontract or retain a replacement subcontractor as soon as possible so as not to delay project completion.

Contractor shall advise each subcontractor of County's rights, and the subcontractor's obligations, under this Article by including a provision in each subcontract substantially in the following form:

"Subcontractor hereby warrants that it will at all times during the term of this contract comply with all federal immigration laws applicable to Subcontractor's employees, and with the requirements of A.R.S. §23-214 (A). Subcontractor further agrees that County may inspect the Subcontractor's books and records to insure that Subcontractor is in compliance with these requirements. Any breach of this paragraph by Subcontractor will be deemed to be a material breach of this contract subjecting Subcontractor to penalties up to and including suspension or termination of this contract."

Any additional costs attributable directly or indirectly to remedial action under this Article shall be the responsibility of Contractor. In the event that remedial action under this Article results in delay to one or more tasks on the critical path of Contractor's approved construction or critical milestones schedule, such period of delay shall be deemed excusable delay for which Contractor shall be entitled to an extension of time, but not costs.

ARTICLE XI – ANTI-TERRORISM WARRANTY: Pursuant to A.R.S. § 35-393.06(B) and 35-301.06(A) the Contractor certifies that it does not have scrutinized business operations in Iran or Sudan and that they are in compliance with the Export Administration Act and not on the Excluded Parties List.

IN WITNESS WHEREOF, two (2) identical counterparts of this contract, each of which shall for all purposes be deemed an original thereof, have been duly executed by the parties hereinabove named, on the date and year first above written.

In return for the performance of this Contract by the **Contractor**, the **Owner** agrees to pay the amount of $_____ **INCLUDING ALL APPLICABLE TAXES** through a payment schedule as described in the Contract documents and as may be modified and executed by change orders and by final quantities.

The **Contractor** agrees that this contract, as awarded, is for the following work, and understands that payment for the total work will be made on the basis of the indicated amount(s), as bid in the Proposal and attached Bidding Schedule for:

RUSSELL ROAD RECONSTRUCTION PROJECT
BID NO. 032712-1

OWNER:

GILA COUNTY BOARD OF SUPERVISORS

_____
Tommie C. Martin, Chairman, Board of Supervisors

ATTEST:

_____
Marian Sheppard, Chief Deputy Clerk of the Board

APPROVED AS TO FORM:

_____
Bryan B. Chambers, Chief Deputy County Attorney
***for* Daisy Flores, County Attorney**

CONTRACTOR:

_____
Contractor Signature

_____
Print Name

_____
Witness (If Contractor is Individual)

STATUTORY PERFORMANCE BOND

PURSUANT TO TITLE 34, CHAPTER 2, ARTICLE 2 OF THE ARIZONA REVISED STATUTES

(PENALTY OF THIS BOND MUST BE 100% OF CONTRACT AMOUNT)

KNOW ALL MEN BY THESE PRESENTS:

That, _____

_____, (hereinafter called the Principal), as Principal,

and _____
(hereinafter called Surety), a corporation duly organized and existing the laws of the State of

_____ with its principal office in the city of _____ holding a certificate of authority to transact surety business in Arizona issued by the Director of the Department of Insurance, as Surety, are held and firmly bound unto Gila County (hereinafter called the Obligee) in the amount of (100% OF CONTRACT AMOUNT)_____ dollars ($_____), for the payment whereof, the said Principal and Surety bind themselves, and their heirs, administrator, executors, successors, and assigns, jointly and severally, firmly by these presents.

WHEREAS, the Principal has agreed to enter into a certain contract with the Obligee for: **RUSSELL ROAD RECONSTRUCTION PROJECT, GLOBE, ARIZONA,** which contract is hereby referred to and made a part hereof as fully and to the same extent as if copied at length herein.

NOW, THEREFORE, THE CONDITION OF THIS OBLIGATION IS SUCH, that if the said Principal shall faithfully perform and fulfill all the undertakings, covenants, terms, conditions and agreements of said contract during the original term of said contract and any extension thereof, with or without notice to the Surety, and during the life of any guaranty required under the contract, and shall also perform and fulfill all the undertakings, covenants, terms, conditions, and agreements of any and all duly authorized modifications of said contract that may hereafter be made, notice of which modifications to the Surety being hereby waived; then the above obligation shall be void, otherwise to remain in full force and effect;

PROVIDED, HOWEVER, that this bond is executed pursuant to the provisions of Title 34, Chapter 2, Article 2, of the Arizona Revised Statutes, and all liabilities on this bond shall be determined in accordance with the provisions of said Title, Chapter and Article, so the extent as if they were copied at length herein.

The prevailing party in a suit on this bond shall recover as a part of the judgment such reasonable attorneys' fees as may be fixed by a judge of the court.

Witness our hands this _____ day of _____, 20 _____.

Phone Number

_____
Principal **Seal**

_____
Surety **Seal**

_____
Agency of Record

_____
Arizona Countersignature

_____
Address

_____

_____
By:

_____
By:

_____
Agency Address

STATUTORY LABOR AND MATERIALS BOND

PURSANT TO TITLE 34, CHAPTER 2, ARTICLE 2 OF THE ARIZONA REVISED STATUTES

(PENALTY OF THIS BOND MUST BE 100% OF CONTRACT AMOUNT)

KNOW ALL MEN BY THESE PRESENTS:
That,

_____

_____, (hereinafter called the Principal), as Principal, and

_____
(hereinafter called Surety), a corporation duly organized and existing the laws of the State of

_____ with its principal office in the city of _____ holding a certificate of authority to transact surety business in Arizona issued by the Director of the Department of Insurance, as Surety, are held and firmly bound unto Gila County (hereinafter called the Obligee) in the amount of (100% of Contract Amount)_____ dollars ($_____), for the payment whereof, the said Principal and Surety bind themselves, and their heirs, administrator, executors, successors, and assigns, jointly and severally, firmly by these presents.

WHEREAS, the Principal has agreed to enter into a certain contract with the Obligee for: **RUSSELL ROAD RECONSTRUCTION PROJECT, GLOBE, ARIZONA,** which contract is hereby referred to and made a part hereof as fully and to the same extent as if copied at length herein.

NOW, THEREFORE, THE CONDITION OF THIS OBLIGATION IS SUCH, that if the said Principal shall faithfully perform and fulfill all the undertakings, covenants, terms, conditions and agreements of said contract during the original term of said contract and any extension thereof, with or without notice to the Surety, and during the life of any guaranty required under the contract, and shall also perform and fulfill all the undertakings, covenants, terms, conditions, and agreements of any and all duly authorized modifications of said contract that may hereafter be made, notice of which modifications to the Surety being hereby waived; then the above obligation shall be void, otherwise to remain in full force and effect;

PROVIDED, HOWEVER, that this bond is executed pursuant to the provisions of Title 34, Chapter 2, Article 2, of the Arizona Revised Statutes, and all liabilities on this bond shall be determined in accordance with the provisions of said Title, Chapter and Article, so the extent as if they were copied at length herein.

The prevailing party in a suit on this bond shall recover as a part of the judgment such reasonable attorneys' fees as may be fixed by a judge of the court.

Witness our hands this _____ day of _____, 20 _____

_____
Principal **Seal**

_____
Surety **Seal**

_____
Agency of Record

_____
Arizona Countersignature

_____
Address

_____
Phone Number

_____
By:

_____
By:

_____
Agency Address

GILA COUNTY

CONTRACT PERFORMANCE WARRANTY

I, _____, representing

_____ (company name)

do hereby warranty the work performed for the:

RUSSELL ROAD RECONSTRUCTION PROJECT, GLOBE, ARIZONA,

for a period of **two (2) years** from completion of said work.

Said work shall be free from defects which would cause the work not to perform in it's intended manner.

_____

(Officer, Partner, Owner) **Date**

Form **W-9**
(Rev. October 2007)
Department of the Treasury
Internal Revenue Service

Request for Taxpayer Identification Number and Certification

Give form to the requester. Do not send to the IRS.

Print or type
See Specific Instructions on page 2.

Name (as shown on your income tax return)

Business name, if different from above

Check appropriate box: ☐ Individual/Sole proprietor ☐ Corporation ☐ Partnership
☐ Limited liability company. Enter the tax classification (D=disregarded entity, C=corporation, P=partnership) ▶ .....
☐ Other (see instructions) ▶

☐ Exempt payee

Address (number, street, and apt. or suite no.)

Requester's name and address (optional)

City, state, and ZIP code

List account number(s) here (optional)

Part I Taxpayer Identification Number (TIN)

Enter your TIN in the appropriate box. The TIN provided must match the name given on Line 1 to avoid backup withholding. For individuals, this is your social security number (SSN). However, for a resident alien, sole proprietor, or disregarded entity, see the Part I instructions on page 3. For other entities, it is your employer identification number (EIN). If you do not have a number, see *How to get a TIN* on page 3.

Note. If the account is in more than one name, see the chart on page 4 for guidelines on whose number to enter.

Social security number

or

Employer identification number

Part II Certification

Under penalties of perjury, I certify that:

1. The number shown on this form is my correct taxpayer identification number (or I am waiting for a number to be issued to me), and
2. I am not subject to backup withholding because: (a) I am exempt from backup withholding, or (b) I have not been notified by the Internal Revenue Service (IRS) that I am subject to backup withholding as a result of a failure to report all interest or dividends, or (c) the IRS has notified me that I am no longer subject to backup withholding, and
3. I am a U.S. citizen or other U.S. person (defined below).

Certification instructions. You must cross out item 2 above if you have been notified by the IRS that you are currently subject to backup withholding because you have failed to report all interest and dividends on your tax return. For real estate transactions, item 2 does not apply. For mortgage interest paid, acquisition or abandonment of secured property, cancellation of debt, contributions to an individual retirement arrangement (IRA), and generally, payments other than interest and dividends, you are not required to sign the Certification, but you must provide your correct TIN. See the instructions on page 4.

Sign Here **Signature of U.S. person ▶** **Date ▶**

General Instructions

Section references are to the Internal Revenue Code unless otherwise noted.

Purpose of Form

A person who is required to file an information return with the IRS must obtain your correct taxpayer identification number (TIN) to report, for example, income paid to you, real estate transactions, mortgage interest you paid, acquisition or abandonment of secured property, cancellation of debt, or contributions you made to an IRA.

Use Form W-9 only if you are a U.S. person (including a resident alien), to provide your correct TIN to the person requesting it (the requester) and, when applicable, to:

1. Certify that the TIN you are giving is correct (or you are waiting for a number to be issued),

2. Certify that you are not subject to backup withholding, or

3. Claim exemption from backup withholding if you are a U.S. exempt payee. If applicable, you are also certifying that as a U.S. person, your allocable share of any partnership income from a U.S. trade or business is not subject to the withholding tax on foreign partners' share of effectively connected income.

Note. If a requester gives you a form other than Form W-9 to request your TIN, you must use the requester's form if it is substantially similar to this Form W-9.

Definition of a U.S. person. For federal tax purposes, you are considered a U.S. person if you are:

- An individual who is a U.S. citizen or U.S. resident alien,
- A partnership, corporation, company, or association created or organized in the United States or under the laws of the United States,
- An estate (other than a foreign estate), or
- A domestic trust (as defined in Regulations section 301.7701-7).

Special rules for partnerships. Partnerships that conduct a trade or business in the United States are generally required to pay a withholding tax on any foreign partners' share of income from such business. Further, in certain cases where a Form W-9 has not been received, a partnership is required to presume that a partner is a foreign person, and pay the withholding tax. Therefore, if you are a U.S. person that is a partner in a partnership conducting a trade or business in the United States, provide Form W-9 to the partnership to establish your U.S. status and avoid withholding on your share of partnership income.

The person who gives Form W-9 to the partnership for purposes of establishing its U.S. status and avoiding withholding on its allocable share of net income from the partnership conducting a trade or business in the United States is in the following cases:

- The U.S. owner of a disregarded entity and not the entity,

SECTION VI

NOTED STANDARD DETAIL DRAWINGS

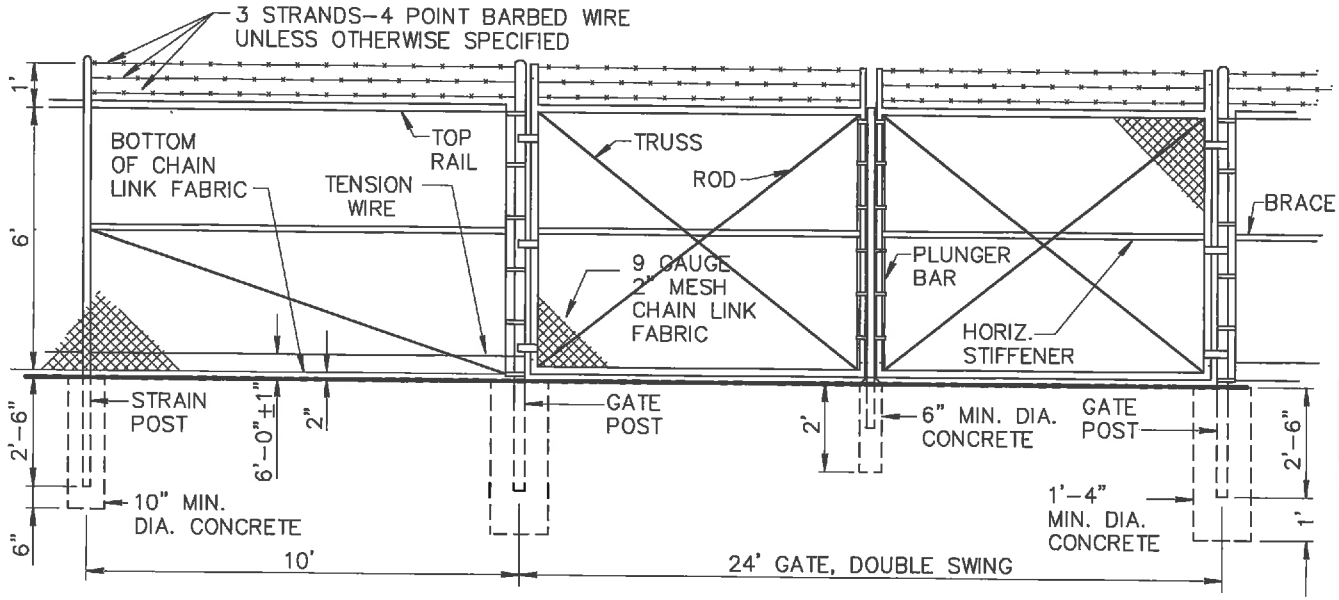

NOTES

1. ALL CONCRETE SHALL BE CLASS 'C' PER SECT. 725.
2. FITTINGS NOT SPECIFICALLY DETAILED SHALL BE HEAVY DUTY DESIGN.
3. STRAIN POSTS SHALL BE SPACED AT 500' MAXIMUM SPACING.
4. BOTH CORNER AND STRAIN POSTS SHALL HAVE STRAIN PANELS.
5. ALL POSTS SHALL BE CAPPED.
6. MEMBER SIZES SHALL BE THE FOLLOWING:

MEMBER	AISC SIZE	OUTSIDE DIA.
CORNER POST	2–1/2"	2.875"
LINE POST	1–1/2"	1.900"
STRAIN POST	1–1/2"	1.900"
BRACE	1–1/4"	1.666"
STRETCH BAR	3/16"x3/4" FLAT	3/16"x3/4" FLAT
GATE POST	3–1/2"	4.000"
TOP RAIL	1–1/4"	1.666"

7. CONSTRUCTION AND MATERIALS SHALL CONFORM TO SECT. 420 AND 722, RESPECTIVELY. SEE TABLE 722 FOR WEIGHTS OF MEMBERS.

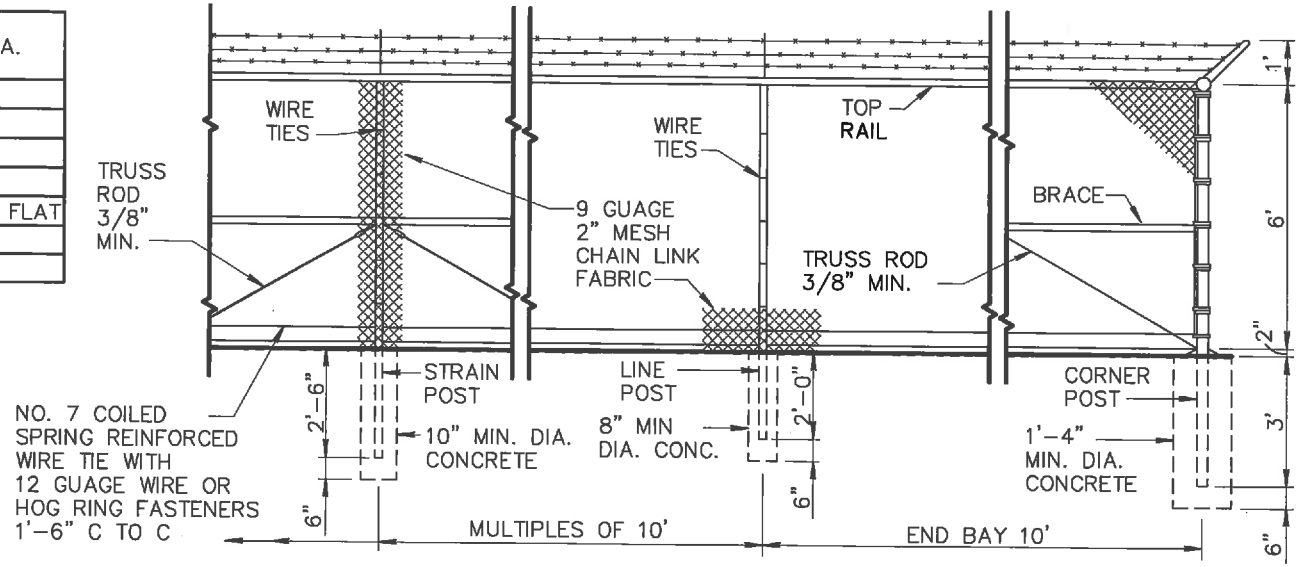

DETAIL NO.				REVISED	DETAIL NO.
160	MARICOPA ASSOCIATION of GOVERNMENTS	STANDARD DETAIL ENGLISH	6' CHAIN LINK FENCE AND GATE	01–01–2003	160

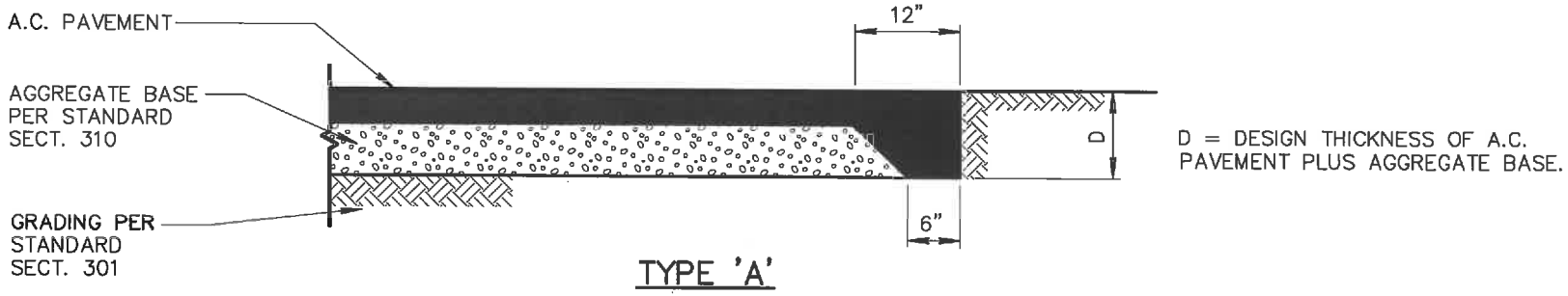

TYPE 'A'

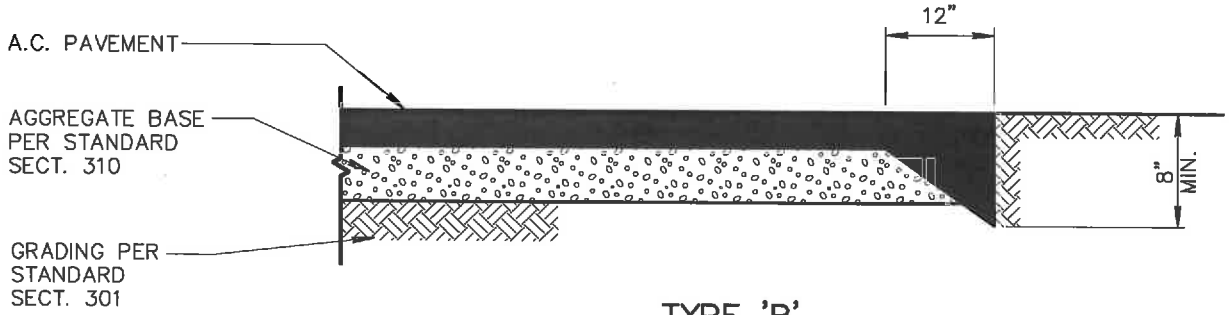

TYPE 'B'

DETAIL NO.				REVISED	DETAIL NO.
201	MARICOPA ASSOCIATION of GOVERNMENTS	STANDARD DETAIL ENGLISH	PAVEMENT SECTION AT TERMINATION	01-01-2008	201

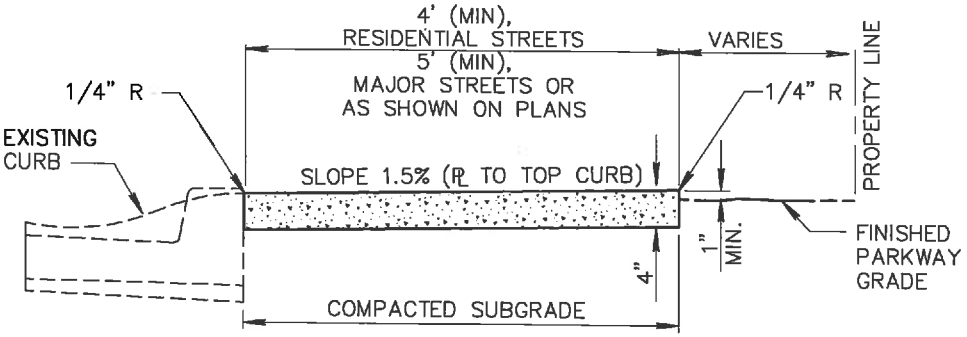

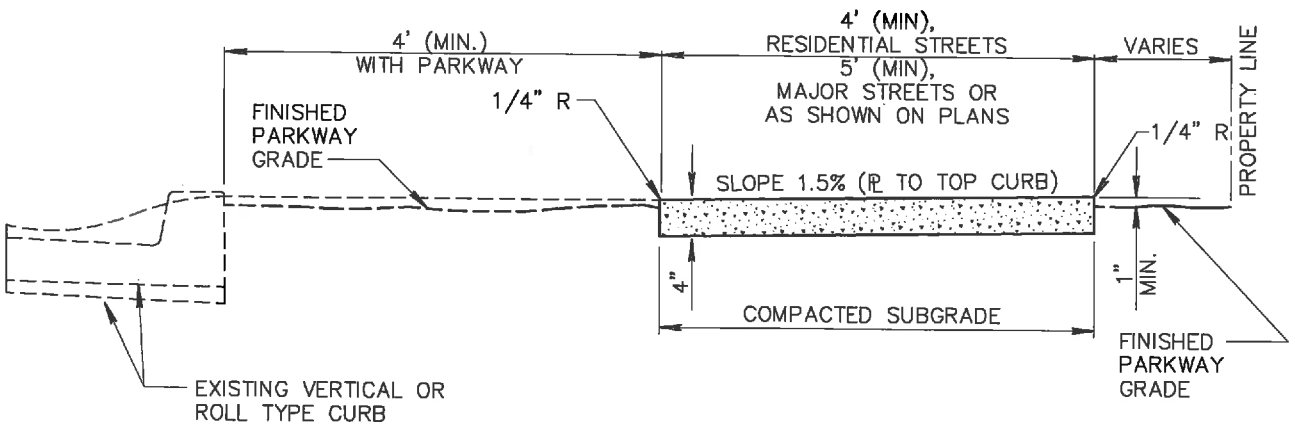

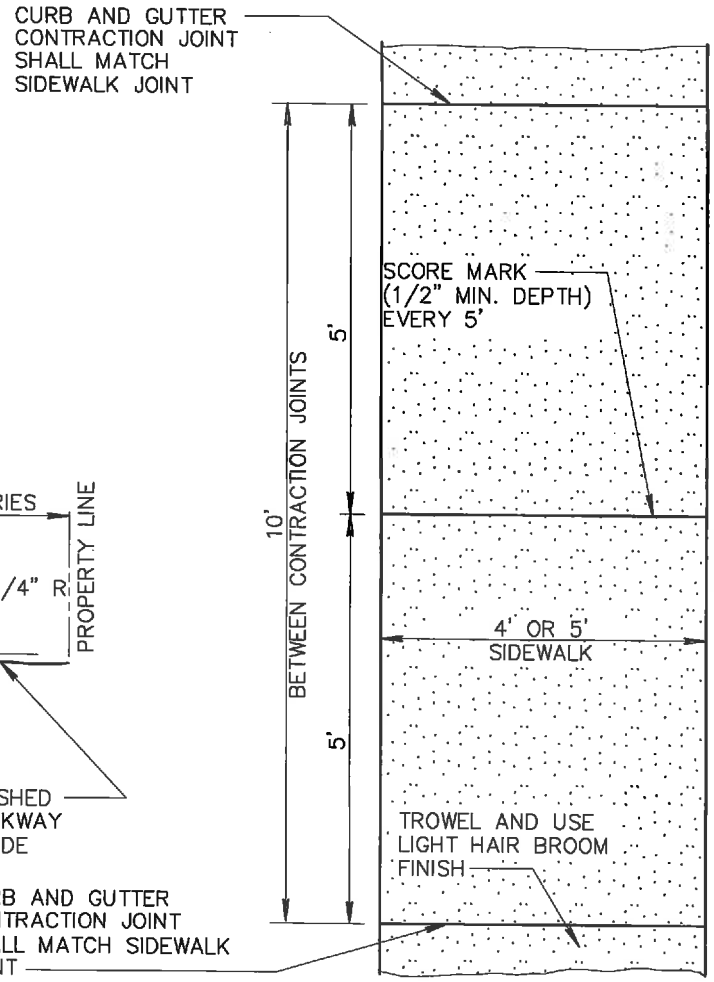

NOTES:

1. SIDEWALK CONSTRUCTION SHALL CONFORM TO SECT. 340.
2. EXPANSION JOINTS SHALL BE 1/2" BITUMINOUS TYPE PREFORMED EXPANSION JOINT FILLER, A.S.T.M. D-1751.
3. LARGE AGGREGATE, IN CONTRACTION JOINT, SHALL BE SEPARATED TO A DEPTH OF 1", FINISH DEPTH SHALL BE A MINIMUM OF 3/4".
4. EXPANSION JOINT 50' MAXIMUM SPACING PER SECT. 340.
5. CLASS 'B' CONCRETE CONSTRUCTION AS PER SECT. 725.

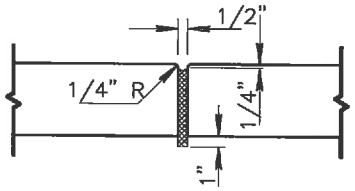

EXPANSION JOINT

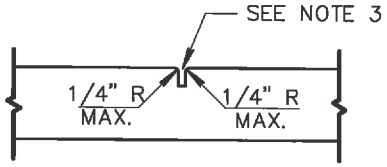

CONTRACTION JOINT

DETAIL NO.				REVISED	DETAIL NO.
230	MARICOPA ASSOCIATION of GOVERNMENTS	STANDARD DETAIL ENGLISH	SIDEWALKS	01-01-2003	230

NO	DESCRIPTION OF REVISIONS	MADE BY	DATE
1	REVISED SPECIFICATIONS	RLF	5/04
2			
3			
4			

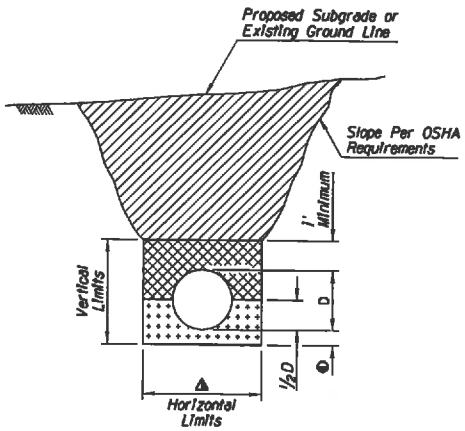

TRENCH CONDITION
IN NATURAL GROUND OR IN EMBANKMENT WITHOUT BRACING

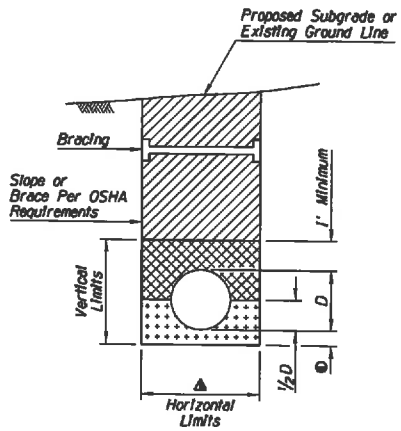

TRENCH CONDITION
IN NATURAL GROUND OR IN EMBANKMENT WITH BRACING SHOWN

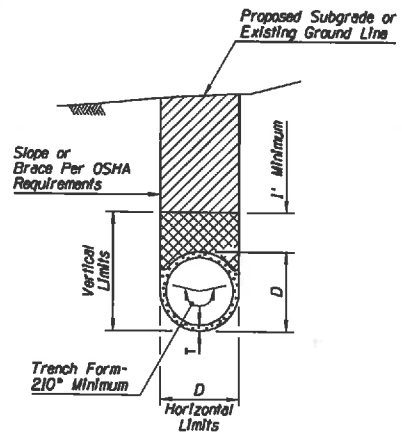

TRENCH CONDITION
NRCIPCP IN NATURAL GROUND OR IN EMBANKMENT

GENERAL NOTES

1. Pipes shall be installed either in a trench condition or in a non-trench condition in natural ground or in embankment.
2. In a trench condition, the vertical and horizontal limits shall be maintained. If horizontal limits are exceeded or the vertical limits are not maintained, a non-trench condition exists.
3. Bracing and sloping shall conform to OSHA requirements.
4. Pipe backfill may be bedding material.
5. In a non-trench condition, the embankment for pipe stability shall be constructed in lifts to the limits shown in the detail simultaneously with the bedding material and pipe backfill. If the contractor chooses to construct it as a trench condition, the embankment shall be constructed before excavating the trench.

D - Outside diameter of full circle pipe or outside dimension (span or rise) of arch, arch pipe, elliptical pipe.

T - Minimum wall thickness for NRCIPCP: See Plans.

① ▲ For D< than 4': D + 6" each side, minimum
D + 2' each side, maximum

① For D≥ than 4': D + 1' each side, minimum
D + 3' each side, maximum

● - 6 inches except when on unyielding or unstable material. See Std Specs.

TRENCH BACKFILL

PIPE BACKFILL

BEDDING

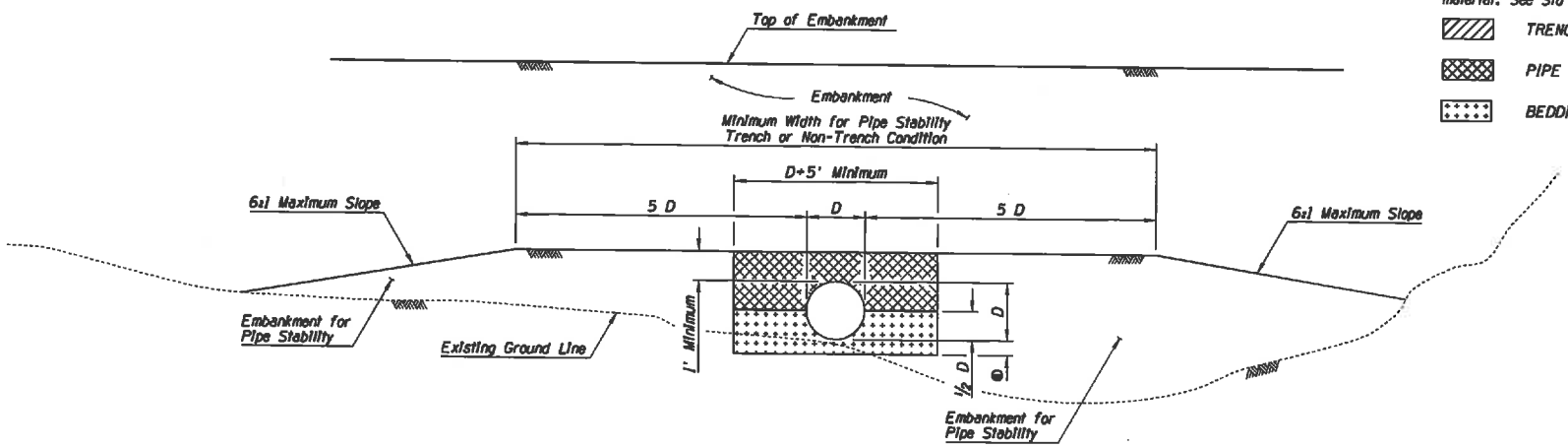

NON-TRENCH CONDITION

APPROVED FOR DESIGN: Mary Vipaina	STATE OF ARIZONA DEPARTMENT OF TRANSPORTATION ROADWAY STANDARD DRAWINGS	REV. 5/07
APPROVED FOR DISTRIBUTION: [signature]	TYPICAL PIPE INSTALLATION	DRAWING NO. C-13.15

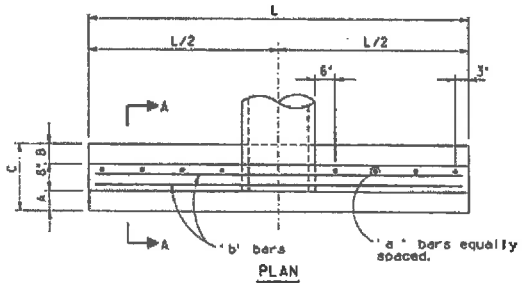

PLAN

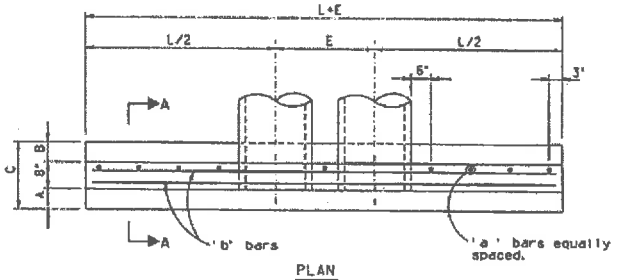

PLAN

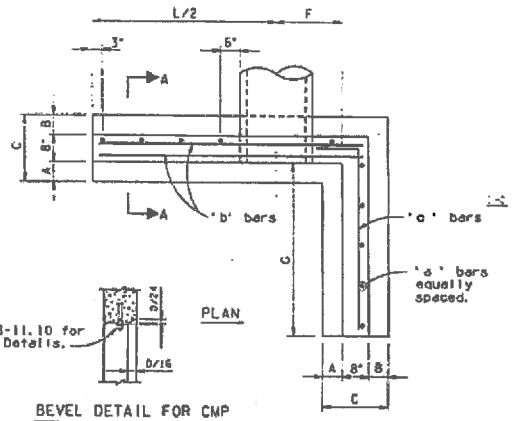

PLAN

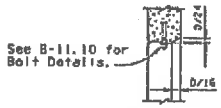

BEVEL DETAIL FOR CMP

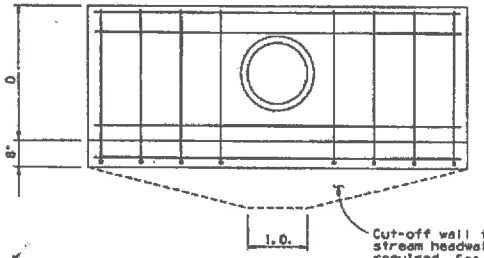

ELEVATION

SINGLE PIPE HEADWALL

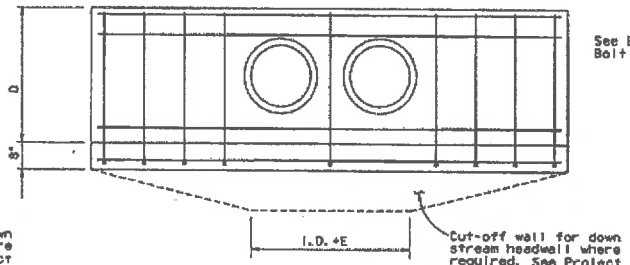

ELEVATION

DOUBLE PIPE HEADWALL

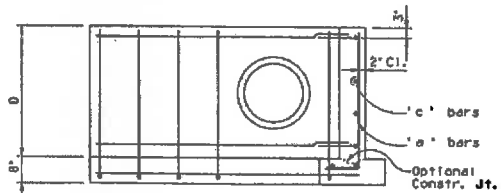

ELEVATION

'L' HEADWALL

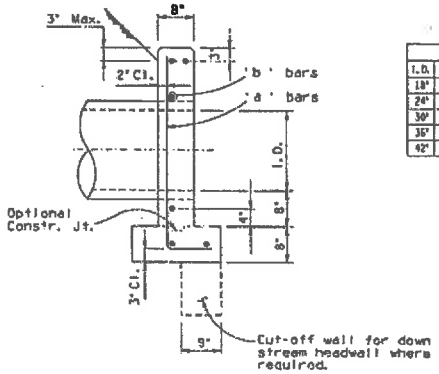

SECTION A-A

Dimensions									
I.D.	A	B	C	D	E	F	G	L	L+E
18"	6"	10"	2'-0	3'-2	2'-6	1'-7	4'-5	8'-6	12'-0
24"	8"	1'-0	2'-4	3'-8	3'-0	2'-1	5'-5	11'-6	14'-6
30"	10"	1'-2	2'-8	4'-2	3'-9	2'-7	6'-5	13'-6	17'-3
36"	1'-0	1'-4	3'-0	4'-8	4'-6	3'-1	7'-5	15'-6	20'-0
42"	1'-2	1'-6	3'-4	5'-2	5'-3	3'-7	8'-5	17'-6	22'-9

* Approximate Quantities									
I.D.	Single Pipe Hdwall.		Double Pipe Hdwall.		Add'l. Pipe Hdwall.		'L' Hdwall.	
	Conc. C.Y.	Reinf. Lbs.	Conc. C.Y.	Reinf. Lbs.	Conc. C.Y.	Reinf. Lbs.	Conc. C.Y.	Reinf. Lbs.
18"	1.2	60	1.4	73	.3	13	1.4	75
24"	1.6	78	2.0	90	.4	15	2.0	100
30"	2.1	97	2.6	116	.5	19	2.6	121
36"	2.7	111	3.4	133	.7	22	3.4	152
42"	3.4	135	3.3	160	.8	26	4.2	180

*Quantities do not include cut-off wall.

Reinforcing														
I.D.	'a' bars						'b' bars						'c' bars	
	Single Pipe Headwall		Double Pipe Headwall		'L' Headwall		Single Pipe Headwall		Double Pipe Headwall		'L' Headwall		'L' Headwall	
	No.	Lgth.	No.	Lgth.	No.	Lgth.	No.	Lgth.	No.	Lgth.	No.	Lgth.	No.	Lgth.
18"	8	4'-3	9	4'-3	10	4'-3	6	9'-0	6	11'-6	6	6'-6	5	5'-9
24"	10	5'-0	11	5'-0	12	5'-0	6	11'-0	6	14'-0	6	8'-0	6	6'-9
30"	12	5'-6	13	5'-6	14	5'-6	6	13'-0	6	16'-9	6	9'-6	6	7'-9
36"	12	6'-3	13	6'-3	16	6'-3	6	15'-0	6	19'-6	6	11'-0	7	8'-9
42"	14	7'-0	15	7'-0	18	7'-0	6	17'-0	6	22'-3	6	12'-6	7	9'-9

'a' bars

NOTE:

For General Notes and Chamfer Detail see Std. B-11.10.

Concrete pipe shown. Corrugated metal pipe similar.

High point of headwall shall not project more than 3" above slope.

All concrete shall be Class 'B', f'c=2500 psi.

All reinforcing bars are #4.

For 3 or more pipes, add quantities shown for each additional pipe to Double Pipe Headwall quantity. Add one 'a' bar to double pipe headwall total and increase 'b' bar length by Dimension E for each additional pipe.

Dimension E equals pipe spacing.

DESIGN APPROVED

APPROVED FOR DISTRIBUTION

ARIZONA
DEPARTMENT OF TRANSPORTATION
HIGHWAYS DIVISION
STANDARD DRAWINGS

INLET and OUTLET HEADWALLS
18" to 42" PIPES

REVISION

STANDARD NO.
B-11.11

ARF-1375 **Regular Agenda Item 3- E**

Regular BOS Meeting

Meeting Date: 08/07/2012

Submitted For: Joseph Heatherly, Finance Director

Submitted By: Valrie Bejarano, Contracts Support Specialist, Finance Department

Department: Finance Department

Information

Request/Subject

Request to Post Public Notice of On-line Auction of Surplus Material Quarterly for 1 Year

Background Information

Throughout the year the Procurement Group receives miscellaneous surplus material from County departments. The surplus materials may be offered through a competitive public on-line surplus auction or through a public attendance auction. Some of the items include but are not limited to County vehicles, seized vehicles and items, old laptop computers, televisions, printers, miscellaneous equipment, etc.

Evaluation

Public Notice of the on-line auctions must be posted per the requirements of A.R.S. §11-251[9], Powers of the Board; Sell at public auction, after thirty days' previous notice given by publication in a newspaper of the county, stating the time and place of the auction, and convey to the highest bidder, for cash or contract of purchase extending not more than ten years from the date of sale and on such terms and for such consideration as the board shall prescribe, any property belonging to the county that the board deems advantageous for the county to sell, or that the board deems unnecessary for use by the county, and shall pay the proceeds thereof into the county treasury for use of the county, except that personal property need not be sold but may be used as a trade-in on the purchase of personal property when the board deems this disposition of the personal property to be in the best interests of the county.

On-line surplus auctions will be held quarterly by the Procurement Group unless an excess of surplus materials dictates that the auction will be held sooner. The determination to move forward with the auction date will be made by the Procurement Group depending on what is in the County's best interest.

Conclusion

One month prior to each quarterly auction a public notice will be posted in the Arizona Silverbelt newspaper. The notice will include the date the auction will begin, website address for Public Surplus On-Line Auction, and items being auctioned off.

The quarterly auctions are tentatively scheduled to be held September 3, 2012, December 3, 2012, March 4, 2013, and June 3, 2013. These dates may change as needed and determined by the Procurement Group.

Recommendation

The Finance Director recommends that the Board of Supervisors approve the request to post quarterly in the Arizona Silverbelt newspaper the public notice of on-line auction of surplus materials.

Suggested Motion

Information/Discussion/Action to authorize the quarterly posting of a public notice of on-line auction of surplus materials in the Arizona Silver Belt newspaper per A.R.S. §11-251[9]. **(Joseph Heatherly)**

Attachments

Public Notice of On-line Surplus Auction

GILA COUNTY
NOTICE OF PUBLIC ON-LINE AUCTION

Pursuant to A.R.S. §11-251[9], the Gila County Board of Supervisors gives notice of the on-line auction of surplus items beginning September 3, 2012. Interested parties may bid on the items via the Public Surplus Auction website at www.publicsurplus.com.

Items up for Auction:

- Lap Top Computer Minus Hard-drive
- Old Singer Sewing Machine
- Nikon Lite Touch 110AF
- Omega Rapid Medium Format Film Camera
- Vivitar Electronic Flash Meter
- Vivitar Series 70-201mm
- Soligor Spot Sensor
- Nikon F3 Micro Nikkor 55mm
- Nikon 35mm
- Nikon 105mm
- Sunpack Auto 522 Thyristor

Post:
August 8, 15, 22, and 29, 2012

ARF-1314 **Consent Agenda Item 4- A**

Regular BOS Meeting

Meeting Date: 08/07/2012

Submitted For:	Nancy Neumann, Administrative Clerk	Submitted By:	Nancy Neumann, Administrative Clerk, Sheriff's Office
Department:	Sheriff's Office		
Fiscal Year:	FY 2011-2012	Budgeted?:	Yes
Contract Dates Begin & End:	July 1, 2011 - June 30, 2012	Grant?:	No
Matching Requirement?:	No	Fund?:	Renewal

Information

Request/Subject

Annual Equitable Sharing Agreement and Certification Report for the Sheriff's Office.

Background Information

In the nearly 25 years since the Comprehensive Crime Control Act of 1984 authorized federal officials to implement a national asset forfeiture program, asset forfeiture has become one of the most powerful tools for targeting criminals - including drug dealers and white collar criminals - who prey on the vulnerable for financial gain. The state or local participating law enforcement agency must establish a separate revenue account for the proceeds from the Department of Justice Equitable Sharing Program. No other funds may be included in this account.

Evaluation

This Federal Equitable Sharing Agreement, entered into among the Federal Government, the Gila County Sheriff's Office and the governing body, sets forth the requirements for participation in the federal equitable sharing program and the restrictions upon the use of federally forfeited cash, property, proceeds and any interest earned thereon, which are equitably shared with particpating law enforcement agencies. By its signatures, the Gila County Sheriff's Office agrees that it will be bound by the statutes and guidelines that regulate shared assets. Receipt of the signed Equitable Sharing Agreement and Certification is a prerequisite to receiving any equitably shared cash, property, or proceeds.

As a prerequisite to participating in the Department of Justicve Equitable Sharing Program, a state or local law enforcement agency must annually submit to AFMLS a signed Equitable Sharing Agreement and Certification form.

Conclusion

The Equitable Sharing Agreement and Certification Report is a report to account for separately federal equitable sharing funds received from the Department of Justice and the Department of the Treasury. The Gila County Sheriff's Office established a separate revenue account for state, local, Department of Justice, and Department of the Treasury forfeiture funds. Interest income generated must be accounted for in the appropriate federal forfeiture fund account.

Recommendation

The Gila County Sheriff's Office requests the Gila County Board of Supervisors' approval on the Annual Equitable Sharing Agreement and Certification Report.

Suggested Motion

Approval of an Annual Equitable Sharing Agreement and Certification Report between the Gila County Sheriff's Office, U.S. Department of Justice, and U.S. Department of Treasury to participate in the federal equitable sharing program for fiscal year 2011-2012, all of which pertains to the use of federally forfeited cash, property, proceeds and any interest earned thereon.

Attachments

Equitable Sharing Agreement Report

Legal Explanation

OMB Number 1123-0011
Expires 9-30-2014

Equitable Sharing Agreement and Certification

◯ **Police Department** ◉ **Sheriff's Office** ◯ **Task Force (Complete Table A, page2)**
◯ **Prosecutor's Office** ◯ **Other (specify)** _____

Agency Name: Gila County Sheriff's Office

NCIC/ORI/Tracking Number: A Z 0 0 4 0 0 0 0

Street Address: 1100 South Street

City: Globe **State:** AZ **Zip:** 85501

Contact: Title: Sheriff First: John Last: Armer

Contact: Phone: 928-402-8570 E-mail: jarmer@co.gila.az.us

☐ Same as Contact **Preparer:** First: Nancy Last: Neumann

Preparer: Phone: 928-402-8579 E-mail: nneumann@co.gila.az.us

Last Fiscal Year End: 06/30/2012 **Agency Current Fiscal Year Budget:** _____

◯ **New Participant:** Read the Equitable Sharing Agreement (page 4) and sign the Affidavit (page 5)

◉ **Existing Participant:** Complete the Annual Certification Report, read the Equitable Sharing Agreement (page 4), and sign the Affidavit (page 5)

◯ **Amended Form:** Revise the Annual Certification Report, read the Equitable Sharing Agreement (page 4), and sign the Affidavit (page 5).

Annual Certification Report

	Summary of Equitable Sharing Activity	Justice Funds[1]	Treasury Funds[2]
1	Beginning Equitable Sharing Fund Balance (must match Ending Equitable Sharing Fund Balance from prior FY)	$14,905.27	
2	Federal Sharing Funds Received		
3	Federal Sharing Funds Received from Other Law Enforcement Agencies and Task Forces (complete Table B, page 2)		
4	Other Income		
5	Interest Income Accrued — Non-Interest Bearing ◯ Interest Bearing ◉	$1.31	
6	Total Equitable Sharing Funds (total of lines 1 - 5)	$14,906.58	$0.00
7	Federal Sharing Funds Spent (total of lines a - m below)	$1,500.00	$0.00
8	Ending Balance (difference between line 7 and line 6)	$13,406.58	$0.00

[1] Justice Agencies are: FBI, DEA, ATF, USPIS, USDA, DCIS, DSS, and FDA.

[2] Treasury Agencies are: IRS, ICE, CBP, USSS, and USCG.

	Summary of Shared Monies Spent	Justice Funds	Treasury Funds
a	Total spent on salaries for new, temporary, not-to-exceed one year employees Refer to § VIII.A.2.a.3 of the *Justice Guide*		
b	Total spent on overtime		
c	Total spent on informants, "buy money," and rewards	$1,500.00	
d	Total spent on travel and training		
e	Total spent on communications and computers		
f	Total spent on weapons and protective gear		
g	Total spent on electronic surveillance equipment		
h	Total spent on buildings and improvements		
i	Total transfers to other state and local law enforcement agencies (complete Table C, page 2)		
j	Total spent on other law enforcement expenses (complete Table D, page 3)		
k	Total Expenditures in Support of Community-based Programs (complete Table E, page 3)		
l	Total Windfall Transfers to Other Government Agencies (complete Table F, page 3)		
m	Total spent on matching grants (complete Table G, page 3)		
n	**Total**	$1,500.00	$0.00
o	Did your agency receive non-cash assets? ◯ Yes ◉ No If yes, complete Table H, page 3.		

Please fill out the following tables, if applicable.

Table A: Members of Task Force

Agency Name	NCIC/ORI/Tracking Number

Table B: Equitable Sharing Funds Received from other Agencies

Total the amount transferred to each agency on separate lines

Transferring Agency Name, City, and State	Justice Funds	Treasury Funds
Agency Name: NCIC/ORI/Tracking Number:		

Table C: Equitable Sharing Funds Transferred to Other Agencies

Total the amount transferred to each agency on separate lines

Receiving Agency Name, City, and State	Justice Funds	Treasury Funds
Agency Name: NCIC/ORI/Tracking Number:		

Table D: Other Law Enforcement Expenses

Description of Expense	Justice Funds	Treasury Funds

Table E: Expenditures in Support of Community-based Programs

Refer to § VIII.A.1.m and Appendix C of the *Justice Guide*

Recipient	Justice Funds	

Table F: Windfall Transfers to Other Government Agencies

Refer to § VIII.A.1.n of the *Justice Guide* and pp. 25-26 of the *Treasury Guide*

Recipient	Justice Funds	Treasury Funds

Table G: Matching Grants

Refer to § VIII.A.1.h of the *Justice Guide* and p. 22 of the *Treasury Guide*

Matching Grant Name	Justice Funds	Treasury Funds

Table H: Other Non-Cash Assets Received

Source	Description of Asset
Justice ◯ Treasury ◯	

Table I: Civil Rights Cases

Name of Case	Type of Discrimination Alleged			
	☐ Race	☐ Color	☐ National Origin	☐ Gender
	☐ Disability	☐ Age	☐ Other _____	

Paperwork Reduction Act Notice

Under the Paperwork Reduction Act, a person is not required to respond to a collection of information unless it displays a valid OMB control number. We try to create accurate and easily understood forms that impose the least possible burden on you to complete. The estimated average time to complete this form is 30 minutes. If you have comments regarding the accuracy of this estimate, or suggestions for making this form simpler, please write to the Asset Forfeiture and Money Laundering Section, Program Operations Unit, 1400 New York Avenue, N.W., Tenth Floor, Washington, DC 20005.

Equitable Sharing Agreement

This Federal Equitable Sharing Agreement, entered into among (1) the Federal Government, (2) the above-stated law enforcement agency ("Agency"), and (3) the governing body, sets forth the requirements for participation in the federal equitable sharing program and the restrictions upon the use of federally forfeited cash, property, proceeds, and any interest earned thereon, which are equitably shared with participating law enforcement agencies. By its signatures, the Agency agrees that it will be bound by the statutes and guidelines that regulate shared assets and the following requirements for participation in the federal equitable sharing program. Receipt of the signed Equitable Sharing Agreement and Certification (this "Document") is a prerequisite to receiving any equitably shared cash, property, or proceeds.

1. **Submission.** This Document must be submitted to aca.submit@usdoj.gov within 60 days of the end of the Agency's fiscal year. This Document must be submitted electronically with the Affidavit/Signature page (page 5) submitted by fax. This will constitute submission to the Department of Justice and the Department of Treasury.

2. **Signatories.** This agreement must be signed by the head of the Agency and the head of the governing body. Examples of Agency heads include police chief, sheriff, director, commissioner, superintendent, administrator, chairperson, secretary, city attorney, county attorney, district attorney, prosecuting attorney, state attorney, commonwealth attorney, and attorney general. The governing body's head is the person who allocates funds or approves the budget for the Agency. Examples of governing body heads include city manager, mayor, city council chairperson, county executive, county council chairperson, director, secretary, administrator, commissioner, and governor.

3. **Uses.** Any shared asset shall be used for law enforcement purposes in accordance with the statutes and guidelines that govern the federal Equitable Sharing Program as set forth in the current edition of the Department of Justice's *Guide to Equitable Sharing for State and Local Law Enforcement (Justice Guide),* and the Department of the Treasury's *Guide to Equitable Sharing for Foreign Countries and Federal, State, and Local Law Enforcement Agencies (Treasury Guide).*

4. **Transfers.** Before the Agency transfers cash, property, or proceeds to other state or local law enforcement agencies, it must first verify with the Department of Justice or the Department of Treasury, depending on the source of the funds, that the receiving agency is a federal Equitable Sharing Program participant and has a current Equitable Sharing Agreement and Certification on file.

5. **Internal Controls.** The Agency agrees to account separately for federal equitable sharing funds received from the Department of Justice and the Department of the Treasury. Funds from state and local forfeitures and other sources must not be commingled with federal equitable sharing funds. The Agency shall establish a separate revenue account or accounting code for state, local, Department of Justice, and Department of the Treasury forfeiture funds. Interest income generated must be accounted for in the appropriate federal forfeiture fund account.

The Agency agrees that such accounting will be subject to the standard accounting requirements and practices employed for other public monies as supplemented by requirements set forth in the current edition of the *Justice Guide* and the *Treasury Guide,* including the requirement in the *Justice Guide* to maintain relevant documents and records for five years.

The misuse or misapplication of shared resources or the supplantation of existing resources with shared assets is prohibited. Failure to comply with any provision of this agreement shall subject the recipient agency to the sanctions stipulated in the current edition of the *Justice or Treasury Guides,* depending on the source of the funds/property.

6. **Audit Report.** Audits will be conducted as provided by the Single Audit Act Amendments of 1996 and OMB Circular A-133. The Department of Justice and Department of the Treasury reserve the right to conduct periodic random audits.

Affidavit - Existing Participant

Under penalty of perjury, the undersigned officials certify that **they have read and understand their obligations under the Equitable Sharing Agreement** and that the information submitted in conjunction with this Document is an accurate accounting of funds received and spent by the Agency under the *Justice* and/or *Treasury Guides* during the reporting period and that the recipient Agency is in compliance with the National Code of Professional Conduct for Asset Forfeiture.

The undersigned certify that the recipient Agency is in compliance with the nondiscrimination requirements of the following laws and their Department of Justice implementing regulations: Title VI of the Civil Rights Act of 1964 (42 U.S.C. § 2000d *et seq.*), Title IX of the Education Amendments of 1972 (20 U.S.C. § 1681 *et seq.*), Section 504 of the Rehabilitation Act of 1973 (29 U.S.C. § 794), and the Age Discrimination Act of 1975 (42 U.S.C. § 6101 *et seq.*), which prohibit discrimination on the basis of race, color, national origin, disability, or age in any federally assisted program or activity, or on the basis of sex in any federally assisted education program or activity. The Agency agrees that it will comply with all federal statutes and regulations permitting federal investigators access to records and any other sources of information as may be necessary to determine compliance with civil rights and other applicable statutes and regulations.

During the past fiscal year: (1) has any court or administrative agency issued any finding, judgment, or determination that the Agency discriminated against any person or group in violation of any of the federal civil rights statutes listed above; <u>or</u> (2) has the Agency entered into any settlement agreement with respect to any complaint filed with a court or administrative agency alleging that the Agency discriminated against any person or group in violation of any of the federal civil rights statutes listed above? ○ **Yes** ◉ **No**

If you answered yes to the above question, complete Table I

Agency Head		**Governing Body Head**	
See ¶ 2 on page		See ¶ 2 on page	
Signature:	John R. Armer	Signature:	
Name:	John R. Armer	Name:	Tommie C. Martin
Title:	Sheriff	Title:	Chairman of the GC BOS
Date:	06/20/2012	Date:	06/20/2012

Subscribe to Equitable Sharing Wire:
The Equitable Sharing Wire is an electronic newsletter that gives you important, substantive, information regarding Equitable Sharing policies, practices, and procedures.

Final Instructions:

Step 1: Click to save for your records
Step 2: Click to save in XML format
Step 3: E-mail the XML file to aca.submit@usdoj.gov
Step 4: Fax THIS *<u>SIGNED</u>* PAGE ONLY to (202) 616-1344

FOR AGENCY USE ONLY
Entered by _____

Entered on _____

○ FY End: 06/30/2012

Date Printed: June 20, 2012 10:28

◉ NCIC: AZ0040000 Agency: Gila County Sheriff's Office Phone: 928-402-8570

○ State: AZ Contact: John Armer E-mail: jarmer@co.gila.az.us

GILA COUNTY ATTORNEY
Daisy Flores

Re: County Attorney's Office approval of IGA pursuant to A.R.S. § 11-952(D).

To whom it may concern:

The County Attorney's Office has reviewed the Intergovernmental Agreement attached to this agenda item and has determined that it is in its "proper form" and "is within the powers and authority granted under the laws of this state to such public agency or public procurement unit" pursuant to A.R.S. § A.R.S. § 11-952(D).

Explanation of the Gila County Attorney's Office Intergovernmental Agreement (IGA) Review

A.R.S. § 11-952(D) requires that

> every agreement or contract involving any public agency or public procurement unit of this state . . . before its execution, shall be submitted to the attorney for each such public agency or public procurement unit, who shall determine whether the agreement is in proper form and is within the powers and authority granted under the laws of this state to such public agency or public procurement unit.

In performing this review, the County Attorney's Office reviews IGAs to see that they are in "proper form" prior to their execution. "Proper form" means that the contract conforms to fundamental contract law, conforms to specific legislative requirements, and is within the powers and authority granted to the public agency. It does not mean that the County Attorney's Office approves of or supports the policy objectives contained in the IGA. That approval is solely the province of the public agency through its elected body.

Likewise, this approval is not a certification that the IGA has been properly executed. Proper execution can only be determined after all the entities entering into the IGA have taken legal action to approve the IGA. There is no statutory requirement for the County Attorney's Office to certify that IGAs are properly executed.

Nonetheless, it is imperative for each public agency to ensure that each IGA is properly executed because A.R.S. § 11-952(F) requires that "[a]ppropriate action … applicable to the governing bodies of the participating agencies approving or extending the duration of the … contract shall be necessary before any such agreement, contract or extension may be filed or become effective." This can be done by ensuring that the governing body gives the public proper notice of the meeting wherein action will be taken to approve the IGA, that the item is adequately described in the agenda accompanying the notice, and that the governing body takes such action. Any questions regarding whether the IGA has been properly executed may be directed to the County Attorney's Office.

Proper execution of IGAs is important because A.R.S. § 11-952(H) provides that "[p]ayment for services under this section shall not be made unless pursuant to a fully approved written contract." Additionally, A.R.S. § 11-952(I) provides that "[a] person who authorizes payment of any monies in violation of this section is liable for the monies paid plus twenty per cent of such amount and legal interest from the date of payment."

The public agency or department submitting the IGA for review has the responsibility to read and understand the IGA in order to completely understand its obligations under the IGA if it is ultimately approved by the public entity's board. This is because while the County Attorney's Office can approve the IGA as to form, the office may not have any idea whether the public agency has the capacity to actually comply with its contractual obligations. Also, the County Attorney's Office does not monitor IGA compliance. Hence the public entity or submitting department will need to be prepared to monitor their own compliance. A thorough knowledge of the provisions of the IGA will be necessary to monitor compliance.

Before determining whether an IGA contract "is in proper form," the County Attorney's Office will answer any questions or concerns the public agency has about the contract. It is the responsibility of the public agency or department submitting the IGA for review to ask any specific questions or address any concerns it has about the IGA to the County Attorney's Office at the same time they submit the IGA for review. Making such an inquiry also helps improve the County Attorney's Office review of the IGA because it will help focus the review on specific issues that are of greatest concern to the public agency. Failing to make such an inquiry when the agency does have issues or concerns will decrease the ability of the County Attorney's Office to meaningfully review the IGA.

ARF-1330 **Consent Agenda Item 4- B**

Regular BOS Meeting

Meeting Date: 08/07/2012

Submitted For:	Nancy Neumann, Administrative Clerk	Submitted By:	Nancy Neumann, Administrative Clerk, Sheriff's Office
Department:	Sheriff's Office		
Fiscal Year:	2013	Budgeted?:	Yes
Contract Dates Begin & End:	7/1/2012 to 6/30/2013	Grant?:	Yes
Matching Requirement?:	Yes	Fund?:	Renewal

Information

Request/Subject

Arizona Criminal Justice Commission Drug, Gang and Violent Crime Control Grant Agreement for FY 2013 Cycle 26 Award (ACJC# DC-13-036)

Background Information

The Gila County Sheriff's Drug, Gang, and Violent Crime Task Force has been in operation since its inception in 1988. Since 1988, the Gila County Sheriff's Office each year has applied for and received a grant award from the Arizona Criminal Justice Commission through its Drug, Gang and Violent Crime Control Program.

The mission of the Gila County Drug, Gang and Violent Crime Task Force is to protect life, property and the rights of individuals by using multi agency efforts with participating agencies to reduce drug, gang and violent crime related investigations. The primary objective is to disrupt drug sales, interdict and dismantle drug trafficking and drug organizations as well as to promote education and awareness to the citizens of Gila County and to secure the welfare of the public. It will also assist in identifying local gang affiliated members in conjunction with the Gang and Immigration Intelligence Team Enforcement Mission and the U.S. Marshall's Office and assist Gila County detectives with violent crimes such as homicides, abductions, and jail crime investigations.

Evaluation

The Gila County Drug, Gang and Violent Crime Task Force's ultimate initiative is to protect life, property and the rights of individuals. A letter dated June 20, 2012, was sent to Sheriff John Armer from the Program Manager of the AJCJ Drug, Gang and Violent Crime Control Program advising that a FY 2013 Cycle 26 Grant Award in the amount of $344,288 is being awarded to the Gila County Sheriff's Office providing that the Grant Agreement is approved by the Board of Supervisors, signed and returned to the ACJC within 90 days of the grant award letter dated June 20, 2012.

Conclusion

In order to receive continued funding for the Gila County Drug, Gang and Violent Crime Task Force, the Board of Supervisors needs to officially accept the grant award by executing the Grant Agreement, and the Sheriff's Office needs to return the signed Grant Agreement to ACJC within 90 days of June 20, 2012.

Recommendation

The Gila County Sheriff's Office recommends that the Board of Supervisors approve a Grant Agreement between the Gila County Sheriff's Office and the ACJC through its Drug, Gang and Violent Crime Control Program, which is in the amount of $344,288 for fiscal year 2013.

The total to be paid by the Commission under this Agreement shall not exceed $181,784 in federal funds awarded to the Commission by the U.S. Department of Justice (USDOJ), Office of Justice Programs (OJP) and $93,646 in state funds. The matching amount for this award is $68,858 which will be funded through the Sheriff's Office Specialized Funds under the Sheriff's Office annual 2012-2013 fiscal year budget.

Suggested Motion

Approval of an Arizona Criminal Justice Commission Drug, Gang and Violent Crime Control Grant Agreement (FY 2013 Grant Cycle 26 Award - ACJC Grant No. DC-13-036) awarded to the Gila County Sheriff's Office to provide continued funding for the Gila County Drug, Gang and Violent Crime Task Force in the amount of $344,288 ($181,784 in federal funds, $93,646 in state funds and $68,858 in matching funds from the Sheriff's Office Specialized Funds) for the period July 1, 2012, through June 30, 2013.

Attachments

DGVCC Grant Agreement for FY2013

Legal Explanation

Arizona Criminal Justice Commission

Chairperson
DANIEL G. SHARP, Chief
Oro Valley Police Department

Vice-Chairperson
BILL MONTGOMERY
Maricopa County Attorney

JOSEPH ARPAIO
Maricopa County Sheriff

DAVID K. BYERS, Director
Administrative Office of the Courts

TIMOTHY J. DORN, Chief
Gilbert Police Department

CLARENCE DUPNIK
Pima County Sheriff

ROBERT C. HALLIDAY, Director
Department of Public Safety

JESSE HERNANDEZ, Chairperson
Board of Executive Clemency

TOM HORNE
Attorney General

CHRIS GIBBS, Mayor
City of Safford

KENNETH KIMMEL, Chief
Sierra Vista Police Department

BARBARA LAWALL
Pima County Attorney

RALPH OGDEN
Yuma County Sheriff

SHEILA POLK
Yavapai County Attorney

CHARLES RYAN, Director
Department of Corrections

DAVID SANDERS
Pima County Chief Probation Officer

LINDA SCOTT
Former Judge

MARK SPENCER
Law Enforcement Leader

CARL TAYLOR
Coconino County Supervisor

Executive Director
John A. Blackburn, Jr.

1110 West Washington, Suite 230
Phoenix, Arizona 85007
PHONE: (602) 364-1146
FAX:(602) 364-1175
www.azcjc.gov

June 20, 2012

Honorable John Armer
Gila County Sheriff's Office
P.O. Box 311
Globe, AZ 85502

RE: Drug, Gang, and Violent Crime Control (DGVCC) FY 2013 Cycle 26 Award, DC-13-036

Dear Honorable John Armer:

On behalf of the Arizona Criminal Justice Commission, it is my pleasure to inform you that your agency's application has been approved for funding under the Cycle 26, FY 2013 Drug, Gang and Violent Crime Control Program.

Paragraphs 6 and 7 of the enclosed agreement provide the amount of funding awarded to your agency in addition to identifying specific positions that have been funded. Below, please find additional information that will assist in the administration of your agency's grant award.

Grant Agreement and Other Required Documents: Please review the attached agreement and accompanying documentation as revisions or new requirements have been incorporated. Please return the Grant Agreement in its entirety with authorized signatures to the Arizona Criminal Justice Commission office, *in addition to required documents outlined in the attached checklist.* Agreements not returned within 90 days of the award date with authorized signatures may be cancelled.

Administrative and Financial Requirements: In addition to applicable uniform administrative requirements and cost principles, award recipients are required to adhere to grant specific program requirements as defined in the grant agreement. Recipients may find the following resources useful: ACJC Grant Management Resource Manual and the OJP Financial Guide.

Reporting: Activity and financial reports are required for this grant. Reporting schedule(s) may be found in paragraph 17 of the agreement. Activity and financial report forms can be accessed from our website at: DGVCC Reporting Forms. Reports are to be submitted via e-mail at dcadmin@azcjc.gov or via fax at (602) 364-1175.

Our office looks forward to the continued partnership. Please contact Keri Raichert at (602) 364-1168, KRaichert@azcjc.gov or Amanda Zibell at (602) 364-1186, AZibell@azcjc.gov with questions.

Sincerely,

Tony Vidale

Tony Vidale, Program Manager
Drug, Gang, and Violent Crime Control Program

GCSO
10:23 JUN 26 2012

Our mission is to sustain and enhance the coordination, cohesiveness, productivity and effectiveness of the Criminal Justice System in Arizona

PROGRAM INCOME FORMULA WORKSHEET
PROGRAM CYCLE 26.00
Drug Gang Violent Crime (DGVC) fka BYRNE/JAG Grant

List of employees working for task force (use additional sheet if necessary) and the fund they are paid out of:
(If you have more than 20 employees you can use the other tab for 20+ employees)

	Employee Name (Or Badge #)	Position Title	Fund Paid	DGVC FTE Portion	ACJC FTE Portion	Remaining FTE Portion
1	Johnny Sanchez	Commander	DGVCC	1	1	0
2	Travis Baxley	Sgt.	DGVCC	1	1	0
3	Bianca DalMolin	Agent	DGVCC	1	1	0
4	Dennis Newman	Agent	DGVCC	1	1	0
5	Nancy Neumann	Clerk	General	1		1
6	Sheriff Armer	Sheriff	General	1		1
7	Elizabeth Maupin	County Attorney	General	1		1
8	Joshua Clark	County Attorney	General	1		1
9	Athena Gooding	County Attorney	General	1		1
10	Donna Puhara	County Attorney	General	1		1
11	Daisy Flores	County Attorney	General	1		1
12	Tony McDaniel	DPS	General	1		1
13	Terry Phillips	DPS	General	1		1
14						0
15						0
16						0
17						0
18						0
19						0
20						0
			Total	**13**	**4**	**9**

Total Number of Employees Paid by DGVC Grant: 4.00 (ACJC FTE Portion)
Total Number of Employees Working on Grant: 13.00 (= ACJC + Remaining FTE Portion)
Program Income Formula: 31% (= Byrne/Total Task Force)

Total Allowable Program Income: _____

Grant Related Program Income $0 (= Program Income x Formula)

Percentage of Federal Funding: 53.00% (Federal Percentage of Grant)

Total Reportable Program Income: $0 (= Federal Share of Program Income)

Drug Task Forces

Agency:

Gila County S.O.

Performance Measure	Benchmark	FY 2013 Estimated
Drug Value Removed per Grant Dollar Expended	$55.34	
Value of Drugs (estimated value of drugs seized and purchased)		$19,053,589.00
Grant Funds Expended (FY13 grant amount)		$344,288.00
Arrests per Investigation	1.00	
Number of Arrests		280
Investigations Closed		280
% of Investigations closed	1.00	
Investigations Closed		280
Total Investigations		280

Please enter estimated numbers for each Performance Measure in the yellow boxes. The Benchmark values will automatically calculate. Any notes you wish to make to explain the estimate or the methodology used can be input into the "Notes" column.

FY 2013 Drug Gang and Violent Crime Control Program

CHECKLIST

Please return the documents listed below to the Arizona Criminal Justice Commission Office:

☐ **Signed Grant Agreement – Authorized Signatures**

Note: ACJC retains the grant agreement with original signatures. If your agency wishes to have a copy of the agreement with original signatures for your records, please send additional signed copies, and a copy with original signatures will be mailed back to you. Otherwise, the original will be scanned and a PDF copy of the grant agreement will be sent via e-mail.

☐ **If applicable, approved resolution from the board showing this Agreement as an agenda item (excluding state agencies)**

☐ **Completed Annual Benchmark Worksheet**

Note: All agencies are required to estimate FY 13 (July 1, 2012 – June 30, 2013) activity by completing the yellow boxes of the Annual Benchmark Excel Worksheet.

☐ **If applicable, completed Program Income Worksheet**

Note: All grantees that generate income as a direct result of the grant-funded project must establish a program income formula by completing the program income worksheet.

Please send Grant Agreement and approved resolution documents (if applicable) to the following:

Arizona Criminal Justice Commission
Attn: Drug, Gang and Violent Crime Control Program
1110 W. Washington, Suite 230
Phoenix, AZ 85007

Please submit Annual Benchmark Worksheets and Program Income Worksheets via e-mail at dcadmin@azcjc.gov.

ARIZONA CRIMINAL JUSTICE COMMISSION

GRANT AGREEMENT SIGNING INSTRUCTIONS

Please review the grant agreement and forward to the appropriate approval authority for execution. Funds may only be disbursed to your agency once the agreement is properly and fully executed.

On the grant agreement signature page, there are 3 sections that must be signed/completed. For the purposes of this grant agreement, your agency is the GRANTEE.

A. **Authorized signature**: Requires the signature of the individual ***authorized to make agreements*** for your governmental subdivision.

1. For county offices, the chairman of the county board of supervisors must sign the grant agreement. If someone other than the chairman is designated to sign agreements, please enclose a copy of the resolution authorizing this. If the board's rules require an attestment or certification of the signature by the clerk of the board, it may be typed anywhere it is convenient on the signature page.

2. For city offices, the mayor or the city manager must sign the grant agreement. If someone other than the mayor or city manager is designated to sign agreements, please enclose a copy of the resolution authorizing this. If the council rules require an attestment or certification of the signature by the clerk, it may be typed anywhere it is convenient on the signature page.

3. For county and city offices, a signed copy of the board of supervisors or city council's approved agenda item or resolution listing this grant agreement must be attached to the signed agreement when it is returned to the Arizona Criminal Justice Commission office.

4. For state agencies, the director or chief executive officer of the agency must sign the grant agreement where indicated.

5. For non-profit agencies, the executive director or chairman of the board must sign the agreement where indicated.

B. **Legal counsel for GRANTEE**: Requires the signature of the deputy county attorney or assistant attorney general who provides legal counsel to the governing body. This individual is approving the agreement as to form and attesting to the legal authority of the governing body to perform the agreement activities. State agencies should check if this is required by their legal counsel. This field is not required for non-profit agencies.

C. **Appropriate A.R.S., ordinance, or charter reference:** This line refers to the Arizona Revised Statute, city ordinance or other reference that gives the governing body legal authority to perform the agreement activities. This field is not required for non-profit agencies.

If there are any questions regarding the execution of this agreement, please contact the grant coordinator at (602) 364-1146.

ARIZONA CRIMINAL JUSTICE COMMISSION
DRUG, GANG AND VIOLENT CRIME CONTROL
GRANT AGREEMENT

ACJC Grant Number **DC-13-036**
Catalog of Federal Domestic Assistance (CFDA) Number 16.738

This Grant Agreement is made this 1ST day of July, 2012, by and between the ARIZONA CRIMINAL JUSTICE COMMISSION hereinafter called "COMMISSION" and Gila County, through Gila County Sheriff's Office hereinafter called "GRANTEE". The COMMISSION enters into this Agreement pursuant to its authority under the provisions of A.R.S. § 41-2405 (B)(6), and having satisfied itself as to the qualification of GRANTEE;

NOW, THEREFORE, it is agreed between the parties as follows:

1. This Agreement will commence on July 1, 2012 and terminate on June 30, 2013. This Agreement expires at the end of the award period unless prior written approval for an extension has been obtained from the COMMISSION. A request for an extension must be received by the COMMISSION sixty (60) days prior to the end of the award period. The COMMISSION in its sole discretion may approve an extension that further the goals and objectives of the program and shall determine the length of any extension.

2. GRANTEE agrees that grant funds will be used in accordance with applicable program rules, guidelines and special conditions.

3. The COMMISSION will monitor GRANTEE performance against program goals and performance standards and those outlined in the grant application. Substandard performance as determined by the COMMISSION will constitute noncompliance with this Agreement. If the COMMISSION finds noncompliance, the GRANTEE will receive a written notice which identifies the area of noncompliance, and the appropriate corrective action to be taken. If the GRANTEE does not respond within thirty (30) calendar days to this notice, and does not provide sufficient information concerning the steps which are being taken to correct the problem, the COMMISSION may suspend funding, permanently terminate this Agreement or revoke the grant.

4. Any deviation or failure to comply with the purpose and/or conditions of this Agreement without prior written COMMISSION approval may constitute sufficient reason for the COMMISSION to terminate this Agreement, revoke the grant, require the return of all unspent funds, perform an audit of expended funds, and require the return of any previously spent funds which are deemed to have been spent in violation of the purpose or conditions of this grant.

5. This Agreement may be modified only by a written amendment signed by the Executive Director or by persons authorized by the Executive Director on behalf of the COMMISSION and GRANTEE. Any notice given pursuant to this Agreement shall be in writing and shall be considered to have been given when actually received by the following addressee or their agents or employees:
   A. If to the COMMISSION:

      Arizona Criminal Justice Commission
      1110 W. Washington Street, Suite 230
      Phoenix, Arizona 85007
      Attn: Program Manager

B. If to the GRANTEE:

Gila County Sheriff's Office
P.O. Box 311
Globe, AZ, 85502
Attn: Honorable John Armer

6. For grant awards above $100,000, GRANTEE may make budget adjustments of up to ten (10) percent of the total grant within any approved budget category excluding equipment. Written approval from the COMMISSION in advance is required if GRANTEE wishes to make adjustments or reprogram in excess of ten (10) percent or if GRANTEE wishes to purchase equipment not previously approved.

   For grant awards less than $100,000, the GRANTEE may make budget adjustments within approved categories excluding equipment as long as there are no changes to the purpose or scope of the project. If GRANTEE wishes to purchase equipment not previously approved, written approval from the COMMISSION in advance is required.

APPROVED LINE ITEM PROGRAM BUDGET	
Personnel:	
Salaries	$241,422.00
Fringe Benefits (for salaries/overtime)	$102,866.00
Overtime	Not Approved
Professional & Outside/Consultant & Contractual Services	Not Approved
Travel In-State	Not Approved
Travel Out-of-State	Not Approved
Confidential Funds	Not Approved
Operating Expenses:	
Supplies	Not Approved
Registration/Training	Not Approved
Other	Not Approved
Equipment	
Capital	Not Approved
Noncapital	Not Approved
TOTAL	$344,288.00
Positions Funded: Commander (1.00), Sergeant (1.00), Agent (2.50)	
Equipment Type: Not Approved	

7. The total to be paid by the COMMISSION under this Agreement shall not exceed $181,784.00 in federal funds awarded to the COMMISSION by the U.S. Department of Justice (USDOJ), Office of Justice Programs (OJP) and $93,646.00 in state funds. If this grant has a matching requirement GRANTEE understands that other federal grant funds cannot be used as a match for this grant. The matching amount for this award is $68,858.00.

8. Every payment obligation of the COMMISSION under this Agreement is conditioned upon the availability of funds appropriated or allocated for the payment of such obligation. If funds are not allocated and available for the continuance of this Agreement, this Agreement may be terminated by the COMMISSION. No liability shall accrue to the COMMISSION in the event this provision is exercised, and the COMMISSION shall not be obligated or liable for any future payments or for any damages as a result of termination under this paragraph.

9. GRANTEE agrees to retain all books, account reports, files and other records, (paper and/or electronic) relating to this Agreement and the performance of this Agreement for no less than

five (5) years from the last financial report submitted to the COMMISSION. All such documents shall be subject to inspection and audit at reasonable times, including such records of any subgrantee, contractor, or subcontractor. GRANTEE also understands and agrees that USDOJ and the United States General Accounting Office (USGAO) are authorized to interview any officer or employee of the GRANTEE (or of any subgrantee, contractor, or subcontractor) regarding transactions related to this award.

10. GRANTEE agrees to track, account for, and report on all funds (including specific outcomes and benefits) separately from all other funds for the same or similar purposes or programs.

    Accordingly, the accounting systems of GRANTEE and all subgrantees must ensure that funds from this award are not commingled with funds from any other source.

11. GRANTEE agrees to abide by Federal and State laws and provide accounting, auditing and monitoring procedures to safeguard grant funds and keep such records to assure proper fiscal controls, management and the efficient disbursement of grant funds.

12. For the purpose of this grant, a capital expenditure is $5,000 or above. If GRANTEE'S policy defines a capital expenditure as less than $5,000, GRANTEE will use its own policy.

13. GRANTEE agrees to maintain property records for equipment purchased with grant funds and perform a physical inventory and reconciliation with property records at least every two years or more frequently based on GRANTEE policy. GRANTEE agrees that funds will not be used for the construction of new facilities.

14. The GRANTEE agrees to follow equipment disposition policies outlined in *OMB Circulars A-102 or 2 CFR, Part 215 Uniform Administrative Requirements for Grants and Cooperative Agreements* as codified in (1) 28 CFR, Part 66 or (2) 28 CFR, Part 70 when the equipment is no longer needed for the grant program.
    Link: *OMB Circulars* http://www.whitehouse.gov/omb/grants_attach/

15. GRANTEE agrees that all salaried personnel (including subgrantee personnel) whose activities are to be charged to the award will maintain timesheets or certifications to document hours worked for activities related to this award and non-award related activities. GRANTEE agrees to keep time and attendance sheets for hourly employees signed by the employee and supervisory official having firsthand knowledge of the work performed by the grant-funded employees.

16. GRANTEE agrees that it will submit financial and activity reports to the COMMISSION in a format provided by the COMMISSION, documenting the activities supported by these grant funds and providing an assessment of the impact of these activities which may include documentation of project milestones. In the event reports are not received on or before the indicated date(s), funding may be suspended until such time as delinquent report(s) are received.

17. These reports are to be submitted according to the following schedule(s):

ACTIVITY REPORTS	
Report Period:	**Due Date:**
July 1 to September 30	October 15
October 1 to December 31	January 15
January 1 to March 31	April 15
April 1 to June 30	July 15

FINANCIAL REPORTS			
Report Period:	**Due Date:**	**Report Period:**	**Due Date:**
July 1 to July 31	August 25	January 1 to January 31	February 25
August 1 to August 31	September 25	February 1 to February 28	March 25
September 1 to September 30	October 25	March 1 to March 31	April 25
October 1 to October 31	November 25	April 1 to April 30	May 25
November 1 to November 30	December 25	May 1 to May 31	June 25
December 1 to December 31	January 25	June 1 to June 30	July 25

More frequent reports may be required for GRANTEES who are considered high risk.

18. GRANTEE understands that financial reports are required as an accounting of expenditures for either reimbursement or COMMISSION-approved advance payments.

19. The final request for reimbursement of grant funds must be received by the COMMISSION no later than sixty (60) days after the last day of the award period.

20. All goods and services must be received or have reasonable expectations thereof and placed in service by GRANTEE by the expiration of this award.

21. GRANTEE agrees that all encumbered funds must be expended and that goods and services must be paid by GRANTEE within sixty (60) days of the expiration of this award.

22. GRANTEE agrees to remit all unexpended grant funds to the COMMISSION within thirty (30) days of written request from the COMMISSION.

23. GRANTEE agrees to account for interest earned on federal grant funds and shall remit interest earned in excess of the allowable amount as indicated in the *Office of Justice Programs Financial Guide.* **Link:** *OJP Financial Guide* http://www.ojp.usdoj.gov/financialguide/

24. GRANTEE agrees to obtain written COMMISSION approval for all sole source procurements in excess of $100,000.

25. GRANTEE agrees to obtain written COMMISSION approval prior to the expenditure of grant funds for consultant fees in excess of $450 per day.

26. GRANTEE agrees not to use grant funds for food and/or beverage unless explicitly approved in writing by the COMMISSION.

27. No funds shall be used to supplant federal, state, county or local funds that would otherwise be made available for such purposes. Supplanting means the deliberate reduction of state or local funds because of the existence of any grant funds.

28. GRANTEE assigns to the COMMISSION any claim for overcharges resulting from antitrust violations to the extent that such violations concern materials or services applied by third parties to GRANTEE in exchange for grant funds provided under this Agreement.

29. The parties agree to use arbitration in the event of disputes in accordance with the provisions of A.R.S. § 12-1501-12-1518. The laws of the State of Arizona apply to questions arising under this Agreement and any litigation regarding this Agreement must be maintained in Arizona courts, except as pertaining to disputes which are subject to arbitration.

30. GRANTEE understands that grant funds may not be released until all delinquent reports and reversion of funds from prior grants are submitted to the COMMISSION.

31. GRANTEE agrees that grant funds are not to be expended for any indirect costs that may be incurred by GRANTEE for administering these funds unless explicitly approved in writing by the COMMISSION. This may include, but is not limited to, costs for services such as accounting, payroll, data processing, purchasing, personnel, and building use which may have been incurred by the GRANTEE.

32. Each party (as "Indemnitor") agrees to indemnify, defend and hold harmless the other party (as "Indemnitee") from and against any and all claims, losses, liability, costs, or expenses, (including reasonable attorney's fees) (hereinafter collectively referred to as "Claims") arising out of bodily injury of any person (including death) or property damage, but only to the extent that such Claims which result in vicarious/derivative liability to the Indemnitee are caused by the act, omission, negligence, misconduct, or other fault of the Indeminitor, its officers, officials, agents, employees, or volunteers. If the GRANTEE is a State agency this paragraph does not apply.

33. Unless GRANTEE is a State agency, GRANTEE shall cause its contractor(s), if any, to indemnify, defend, save and hold harmless the State of Arizona, its departments, agencies, boards, commissions, universities and its officers, officials, agents, and employees (hereinafter referred to as "Indemnitee") from and against any and all claims, actions, liabilities, damages, losses or expenses (including court costs, attorneys' fees, and costs of claim processing, investigation and litigation) (hereinafter referred to as "Claims") for bodily injury or personal injury (including death), or loss or damage to tangible or intangible property caused, or alleged to be caused, in whole or in part, by the negligent or willful acts or omissions of GRANTEE'S contractor or any of its owners, officers, directors, agents, or employees or subcontractors. This indemnity includes any claim or amount arising out of or recovered under the Worker's Compensation Law or arising out of the failure of such contractor to conform to any federal, state, or local law, statute, ordinance, rule, regulation or court decree. It is the specific intention of the parties that the Indemnitee shall, in all instances, except for Claims arising solely from the negligence or willful acts or omissions of the Indemnitee, be indemnified by contractor from and against any and all claims. It is agreed that contractor will be responsible for primary loss investigation, defense and judgment costs where this indemnification is applicable. In consideration of the award of this grant, the contractor agrees to waive all rights of subrogation against the State of Arizona, its officers, officials, agents and employees for losses arising from the work performed by the contractor for the State of Arizona. Insurance requirements for any contractor used by GRANTEE are incorporated herein by this reference and attached to this Agreement as Exhibit "A".

34. GRANTEE agrees to notify the COMMISSION within ten (10) days in the event that the project official is replaced during the award period.

35. No rights or interest in this Agreement shall be assigned by GRANTEE without prior written approval of the COMMISSION.

36. GRANTEE will comply with the audit requirements of *OMB Circular A-133 Audits of States, Local Governments and Non-Profit Organizations* and provide the COMMISSION with the audit report and any findings within 90 days of receipt of such finding. If the report contains no findings, the GRANTEE must provide notification that the audit was completed.
Link: *OMB Circulars:* http://www.whitehouse.gov/omb/grants_attach/

37. GRANTEE certifies that it will comply with *OMB Circulars A-102 and 2 CFR, Part 215 Uniform Administrative Requirements for Grants and Cooperative Agreements* as codified in (1) 28 CFR, Part 66.32 or (2) 28 CFR, Part 70.34 and *Cost Principles (1) 2 CFR, Part 225, (2) 2 CFR, Part 220 or (3) 2 CFR, Part 230,* the OJP Financial Guide and the most current version of the ACJC Grant Management Reference Manual.

Link: *OMB Circulars* http://www.whitehouse.gov/omb/grants_attach/
OJP Financial guide: http://www.ojp.usdoj.gov/financialguide/
ACJC Grant Management Reference Manual:
http://azcjc.gov/pubs/home/021104_Manual_GrantReferenceManual.pdf

38. GRANTEE agrees that it cannot use any federal funds, either directly or indirectly, in support of any contract or sub award to either the Association of Community Organizations for Reform Now (ACORN) or its subsidiaries, without the express written approval of the Office of Justice Programs through the COMMISSION.

39. GRANTEE understands and agrees that misuse of award funds may result in a range of penalties, including suspension of current and future funds, suspension or debarment from federal grants, recoupment of monies provided under an award, and civil and/or criminal penalties.

40. Pursuant to A.R.S. § 35-391.06 and A.R.S. § 35-393.06, GRANTEE hereby warrants, and represents that it does not have, and its subcontractors do not have, and during the term hereof will not have a scrutinized business operation in either Sudan or Iran.

41. GRANTEE agrees to check the U.S. General Service Administration (GSA) Excluded Parties Listing Service as required by Executive Order 12549, as defined in 28 CFR Part 83.630 for individuals, agencies, companies and corporations debarred or suspended from doing business with recipients receiving federal funds. GRANTEE agrees not to do business with any individual, agency, company or corporation listed in the Excluded Parties Listing Service.
Link: *Excluded Parties Listing System* http://epls.arnet.gov

42. GRANTEE agrees that no funds provided, or personnel employed under this Agreement shall be in any way, or to any extent, engaged in conduct of political activities in violation of USC Title 5, Part II, Chapter 15, section 1502.

43. GRANTEE certifies that it presently has no financial interest and shall not acquire any financial interest, direct or indirect, which would conflict in any manner or degree with the performance of services required under this Agreement.

44. GRANTEE agrees to cooperate and participate with any and all assessments, evaluation efforts or information and data collection requests, and acknowledges that the federal or state grantor agency has the right to obtain, reproduce, publish or use data provided under this award and may authorize others to receive and use such information.

45. GRANTEE shall provide the COMMISSION with a copy of all interim and final reports and proposed publications (including those prepared for conferences and other presentations) resulting from this Agreement. Submission of such materials must be prior to or simultaneous with their public release.

46. GRANTEE agrees that any publications (written, visual, or sound) excluding press releases and newsletters, whether published at the GRANTEE'S or COMMISSION'S expense, shall contain the following statement:

    "This was supported by Award No. 2011-DJ-BX-2488 awarded by the Bureau of Justice Assistance, Office of Justice programs, U.S. Department of Justice. The opinions, findings, and conclusions or recommendations expressed in this publication/program/exhibition are those of the author(s) and do not necessarily reflect the views of the Department of Justice."

47. GRANTEE agrees to comply with the non-discrimination requirements of the Omnibus Crime Control and Safe Streets Act of 1968, 42 USC §3789d(c)(1); Title VI of the Civil Rights Act of 1964, 42 USC §2000d; Section 504 of the Rehabilitation Act of 1973, 29 USC § 794; Subtitle A, Title II of the Americans with Disabilities Act of 1990, 42 USC § 12132; Title IX of the Education Amendments of 1972, 20 USC § 1681; the Age Discrimination Act of 1975, 42 USC § 6102; the Department of Justice implementing regulations, 28 CFR pt. 42, subpts. C, D, E, G, and I, 28 CFR pt. 35, and 28 CFR pt. 54; all applicable state laws of A.R.S. § 41-1463; and Executive Order 2009-9. The above-referenced federal laws prohibit discrimination on the basis of race, color, religion, sex, disability, and national origin (including limited English proficiency) in the delivery of services and employment practices, and prohibit discrimination on the basis of age in the delivery of services. In the event that a Federal or State Court or Federal or State administrative agency makes a finding of discrimination after a due process hearing against GRANTEE, GRANTEE will forward a copy of the findings to the Office for Civil Rights, Office of Justice Programs and the COMMISSION.

    "Applicants must certify that Limited English Proficiency persons have meaningful access to the services under this program(s). National origin discrimination includes discrimination on the basis of limited English proficiency (LEP). To ensure compliance with Title VI and the Safe Street Act, the applicant is required to take reasonable steps to ensure that LEP persons have meaningful access to programs. Meaningful access may entail providing language assistance services, including oral and written translation when necessary."
    Link: *Limited English Proficiency A Federal Interagency Website* http://www.LEP.gov

48. GRANTEE agrees to comply with the applicable requirements of 28 CFR Part 38, the Department of Justice regulation governing "Equal Treatment for Faith Based Organizations" (the "Equal Treatment Regulation"). The Equal Treatment Regulation provides in part that Department of Justice financial assistance may not be used to fund any inherently religious activities, such as worship, religious instruction, or proselytization. Recipients of Department of Justice financial assistance may still engage in inherently religious activities, but such activities must be separate in time or place from the Department of Justice funded program, and participation in such activities by individuals receiving services from GRANTEE must be voluntary. The Equal Treatment Regulation also makes clear that organizations participating in programs receiving financial assistance from the Department of Justice are not permitted to discriminate in the provision of services on the basis of a beneficiary's religion. Notwithstanding any other special condition of this award, faith-based organizations may, in some circumstances, consider religion as a basis for employment.
    Link: http://www.ojp.gov/about/ocr/equal_fbo.htm.

49. GRANTEE assures that it will comply with all state and federal laws regarding privacy during the course of the award. All information relating to clients is to be treated with confidentiality in accordance with 42 USC section 3789g or 42 USC 14132(b)(3) that are applicable to the collection, disclosure, use and revelation of data information. GRANTEE further agrees to submit a Privacy Certificate that is in accordance with requirements of 28 CFR Part 22 if applicable to the program.

50. GRANTEE agrees to formulate and keep on file an Equal Employment Opportunity Plan (EEOP) (if grantee is required pursuant to 28 CFR 42.302). GRANTEE certifies that they have forwarded to the Office for Civil Rights, Office of Justice Programs the EEOP, or certifications that they have prepared and have on file an EEOP, or that they are exempt from EEOP requirements. Failure to comply may result in suspension of grant funds. Copies of all submissions such as certifications to or correspondence with the Office for Civil Rights, Office of Justice Programs regarding this requirement must be provided to the COMMISSION by GRANTEE. In the event a federal or state court or federal or state administrative agency makes an adverse finding of discrimination against GRANTEE after a due process hearing, on the

ground of race, color, religion, national origin, or sex, GRANTEE will forward a copy of the findings to the Office for Civil Rights, Office of Justice Programs and the COMMISSION.

51. If GRANTEE is a governmental political subdivision, GRANTEE agrees to utilize the *Data Dictionary*, approved and distributed by the COMMISSION, as the data entry standard for information systems when improving or updating an existing information system. GRANTEE agrees to utilize the *Data Dictionary* as the data entry standard in any new system or when an existing information system is replaced. The *Data Dictionary* is available upon request to ACJC.

52. To support public safety and justice information sharing, GRANTEE, if a governmental subdivision, shall use the National Information Exchange Model (NIEM) specifications and guidelines for this grant. GRANTEE shall publish and make available without restrictions all schemas generated as a result of this grant to the component registry as specified in the guidelines.
Link: https://www.niem/gov/program-managers/Pages/implementation guide.aspx

53. To avoid duplicating existing networks or IT systems in any initiatives for law enforcement information sharing systems which involve interstate connectivity between jurisdictions, such systems shall employ, to the extent possible, existing networks as the communication backbone to achieve interstate connectivity, unless GRANTEE can demonstrate to the satisfaction of the COMMISSION that this requirement would not be cost beneficial or would impair the functionality of an existing or proposed IT system.

54. If GRANTEE is a governmental political subdivision, the GRANTEE should, to the extent possible and practical; share criminal justice information with other authorized criminal justice agencies. The process control number (PCN) shall be used in accordance with A.R.S. § 41-1750 when sharing data with other criminal justice agencies as electronic data systems are developed or improved.

55. If GRANTEE is a state agency and the award is for the development of information technology projects for more than $25,000, GRANTEE must complete a Project Investment Justification (PIJ) and submit the justification to the Arizona Department of Administration (ADOA), with a copy to the COMMISSION. GRANTEE agrees to submit required project status reports to ADOA by the due dates and submit copies to the COMMISSION.

    If GRANTEE is not a state agency and the award is for the development of information technology projects, GRANTEE will follow local technology policies and guidelines.

56. GRANTEE must promptly refer to the COMMISSION any credible evidence that a principal, employee, agent, contractor, subgrantee, or other person has either 1) submitted a false claim for grant funds under the False Claims Act; or 2) committed a criminal or civil violation of laws pertaining to fraud, conflict of interest, bribery, gratuity, or similar misconduct involving grant funds. The COMMISSION shall forward the referral to the Department of Justice, Office of the Inspector General.

57. The COMMISSION encourages GRANTEE to establish workplace safety policies and conduct education, awareness and other outreach to decrease crashes caused by distracted drivers, including adopting and enforcing policies banning employees from text messaging while driving any vehicle during the course of performing work funded by this grant. Executive Order 13513, "Federal Leadership on Reducing Text Messaging While Driving," 74 Fed. Reg. 51225 (October 2009).

58. GRANTEE certifies to comply with the Drug-Free Workplace Act of 1988, and implemented in 28 CFR Part 83, Subpart F, for grantees, as defined in 28 CFR, Part 83 Sections 83.620 and 83.650.

59. GRANTEE agrees to complete and keep on file, as appropriate, Immigration and Naturalization Form (I-9). This form is to be used by recipients to verify that persons are eligible to work in the United States. Additionally GRANTEE ensures compliance with A.R.S. § 41-4401 federal immigration laws by state employers and contractors.

60. GRANTEE acknowledges that immigration laws require them to register and participate with the E-Verify program (employment verification program administered by the United States Department of Homeland Security and the Social Security Administration or any successor program) as they both employ one or more employees in this state. GRANTEE warrants that they have registered with and participate with E-Verify. If the GRANTOR later determines that the GRANTEE has not complied with E-Verify, it will notify the non-compliant GRANTEE by certified mail of the determination and of the right to appeal the determination.

61. Grantee certifies that no federal funds will be paid, by or on behalf of, to any person for influencing or attempting to influence an officer or employee of any agency, a Member of Congress, an officer or employee of Congress, or an employee of a Member of Congress in connection with the awarding of any Federal contract, the making of any Federal grant, the making of any Federal loan, the entering into any cooperative agreement, and for the extension, continuation, renewal, amendment, or modification of any Federal contract, grant, loan or cooperative agreement. If any funds other than Federal funds are paid or will be paid to any person for influencing or attempting to influence an officer or employee of Congress, or an employee of a Member of Congress in connection with this Federal award, grant loan, or cooperative agreement, the GRANTEE will complete and submit to the COMMISSION Standard Form-LLL, "Disclosure Form to Report Lobbying" in accordance with its instructions.

62. GRANTEE agrees to comply with all federal, state and local environmental laws and regulations applicable to the development and implementation of activities to be funded under this award. Additional requirements may be found in Grant Agreement Continuation Sheet.

63. GRANTEE agrees to ensure that, no later than the due date of the GRANTEE's first quarterly report after the award is made, GRANTEE and any subgrantees have a valid DUNS profile and has an active registration with the Central Contractor Registration (CCR) database.

    GRANTEE agrees expeditiously to obtain active registration with the CCR database, and to notify the program office in writing of its registration and expiration date.

64. GRANTEE agrees that all income generated as a direct result of this award shall be deemed program income. All program income must be accounted for and used for the purpose under the conditions applicable for the use of funds under this award, including the effective edition of the OJP Financial Guide and, as applicable, either (1) 28 CFR part 66 or (2) 28 CFR part 70 and OMB Circular A-102 & 2 CFR 215.

65. This Agreement is subject to cancellation pursuant to the provision of A.R.S. § 38-511. This Agreement may also be cancelled at the COMMISSION'S discretion if not returned with authorized signatures to the COMMISSION within 90 days of commencement of the award.

66. If any provision of this Agreement is held invalid, the remainder of the Agreement shall not be affected thereby and all other parts of this Agreement shall be in full force and effect.

67. GRANTEE agrees to comply with all Special Condition(s) included with this Agreement on the Grant Agreement Continuation Sheet.

Arizona Criminal Justice Commission
DRUG, GANG, AND VIOLENT CRIME CONTROL
GRANT AGREEMENT CONTINUATION SHEET

SPECIAL CONDITION(S)

1. GRANTEE agrees that within 120 days of award, for any law enforcement task force funded with these funds, the task force commander, agency executive, task force officers, and other task force members of equivalent rank, will complete required online (internet-based) task force training to be provided free of charge through BJA's Center for Task Force Integrity and Leadership (www.ctfli.org).

2. GRANTEE agrees to the completion of the ACJC Subgrantee Self-Assessment Questionnaire within 90 days of the start date of this award.

3. GRANTEE assures that the State Information Technology Point of Contact receive written notification regarding any information technology project funded by this grant. GRANTEE agrees to keep on file documentation showing that it has met this requirement.

4. The GRANTEE agrees to comply with all federal, state and local environmental laws and regulations applicable to the development and implementation of activities to be funded under this award. The GRANTEE agrees and understands that complying with NEPA may require the preparation of an Environmental Assessment and/or an Environmental Impact Statement, as directed by BJA. The GRANTEE further understands and agrees to the requirements for implementation of a Mitigation Plan, as detailed at http://www.ojp.usdoj.gov/BJA/resource/nepa.html, for programs relating to methamphetamine laboratory operations.

5. GRANTEE agrees that any information technology system developed or supported by funds will comply with 28 CFR Part 23, Criminal Intelligence Systems Operating Policies, if OJP determines this regulation be applicable. Should OJP determine 28 CFR Part 23 to be applicable, OJP may at its discretion, perform audits of the system, as per 28 CFR 23.20(g). Should any violation of 28 CFR Part 23 occur, GRANTEE may be fined as per 42 USC 3789g(c)-(d). GRANTEE may not satisfy such a fine with federal funds.

Authorized Official Initials: JRA

IN WITNESS WHEREOF, the parties have made and executed the Agreement the day and year first above written.

FOR GRANTEE:

Tommie C. Martin, Chairman Printed Name Date

John R. Armer John R. Armer 7-10-12

John R. Armer, Sheriff Printed Name Date

Approved as to form and authority to enter into Agreement:

Legal Counsel for the GRANTEE Date

Bryan Chambers, Chief Deputy County Attorney

Statutory or other legal authority to enter into Agreement:

Appropriate A.R.S., ordinance, or charter reference

FOR CRIMINAL JUSTICE COMMISSION:

John A. Blackburn Jr., Executive Director
Arizona Criminal Justice Commission Date

ARIZONA CRIMINAL JUSTICE COMMISSION
GRANT AGREEMENT

Insurance Requirements
Exhibit "A"

***Insurance Requirements* for Governmental Parties to a Grant Agreement:**

None.

***Insurance Requirements* for Any Contractors Used by a Party to the Grant Agreement:**

(Note: this applies only to Contractors used by a governmental entity, not to the governmental entity itself.) The *insurance requirements* herein are minimum requirements and in no way limit the indemnity covenants contained in the Intergovernmental Agreement. The State of Arizona in no way warrants that the minimum limits contained herein are sufficient to protect the governmental entity or Contractor from liabilities that might arise out of the performance of the work under this Contract by the Contractor, his agents, representatives, employees or subcontractors, and Contractor and the governmental entity are free to purchase additional insurance.

A. **MINIMUM SCOPE AND LIMITS OF INSURANCE:** Contractor shall provide coverage with limits of liability not less than those stated below.

1. **Commercial General Liability – Occurrence Form**
   Policy shall include bodily injury, property damage, personal injury and broad form contractual liability.

• General Aggregate	$2,000,000
• Products – Completed Operations Aggregate	$1,000,000
• Personal and Advertising Injury	$1,000,000
• Blanket Contractual Liability – Written and Oral	$1,000,000
• Fire Legal Liability	$50,000
• Each Occurrence	$1,000,000

   a. The policy shall be endorsed to include the following additional insured language: ***"The State of Arizona, its departments, agencies, boards, commissions, universities and its officers, officials, agents, and employees shall be named as additional insureds with respect to liability arising out of the activities performed by or on behalf of the Contractor".***

      (Note that the other governmental entity(ies) is/are also required to be additional insured(s) and they should supply the Contractor with their own list of persons to be insured.)

   b. Policy shall contain a waiver of subrogation against the State of Arizona, its departments, agencies, boards, commissions, universities and its officers, officials, agents, and employees for losses arising from work performed by or on behalf of the Contractor.

Exhibit "A" Page 2

2. **Business Automobile Liability**
   Bodily Injury and Property Damage for any owned, hired, and/or non-owned vehicles used in the performance of this Contract.

   Combined Single Limit (CSL) $1,000,000

   a. The policy shall be endorsed to include the following additional insured language: ***"The State of Arizona, its departments, agencies, boards, commissions, universities and its officers, officials, agents, and employees shall be named as additional insureds with respect to liability arising out of the activities performed by or on behalf of the Contractor, involving automobiles owned, leased, hired or borrowed by the Contractor".***

   b. Policy shall contain a waiver of subrogation against the State of Arizona, its departments, agencies, boards, commissions, universities and its officers, officials, agents, and employees for losses arising from work performed by or on behalf of the Contractor.

      (Note that the other governmental entity(ies) is/are also required to be additional insured(s) and they should supply the Contractor with their own list of persons to be insured.)

3. **Worker's Compensation and Employers' Liability**

Workers' Compensation	Statutory
Employers' Liability	
Each Accident	$500,000
Disease – Each Employee	$500,000
Disease – Policy Limit	$1,000,000

   a. Policy shall contain a waiver of subrogation against the State of Arizona, its departments, agencies, boards, commissions, universities and its officers, officials, agents, and employees for losses arising from work performed by or on behalf of the Contractor.

   b. This requirement shall not apply to: Separately, EACH contractor or subcontractor exempt under A.R.S. 23-901, AND when such contractor or subcontractor executes the appropriate waiver (Sole Proprietor/Independent Contractor) form.

B. **ADDITIONAL INSURANCE REQUIREMENTS:** The policies are to contain, or be endorsed to contain, the following provisions:

1. The State of Arizona, its departments, agencies, boards, commissions, universities and its officers, officials, agents, and employees *and the other governmental entity* shall be additional insureds to the full limits of liability purchased by the Contractor even if those limits of liability are in excess of those required by the Contract.
2. The Contractor's insurance coverage shall be primary insurance with respect to all other available sources.
3. The Contractor's insurance shall apply separately to each insured against whom claim is made or suit is brought, except with respect to the limits of the insured's liability. Coverage provided by the Contractor shall not be limited to the liability assumed under the indemnification provisions of its Contract with the other governmental entity(ies) party to the IGA.

C. **NOTICE OF CANCELLATION:** Each insurance policy required by the insurance provisions of this Agreement shall not be suspended, voided, cancelled, reduced in coverage or in limits except after thirty (30) days prior written notice has been given the State of Arizona. Such notice shall be sent directly to the GRANTEE and the Arizona Criminal Justice Commission 1110 W. Washington, Suite 230, Phoenix, AZ 85007 and shall be sent by certified mail, return receipt requested.

D. **ACCEPTABILITY OF INSURERS:** Insurance is to be placed with duly licensed or approved non-admitted insurers in the State of Arizona with an "A.M. Best" rating of not less than A- VII. The State of Arizona in no way warrants that the above-required minimum insurer rating is sufficient to protect the Contractor from potential insurer insolvency.

E. **VERIFICATION OF COVERAGE:** Contractor shall furnish the GRANTEE and the Arizona Criminal Justice Commission with certificates of insurance (ACORD form or equivalent approved by the State of Arizona) as required by this Agreement. The certificates for each insurance policy are to be signed by a person authorized by that insurer to bind coverage on its behalf.

All certificates and endorsements are to be received and approved before work commences. Each insurance policy required by this Agreement must be in effect at or prior to commencement of work under this Agreement and remain in effect for the duration of the project. Failure to maintain the insurance policies as required by this Agreement, or to provide evidence of renewal, is a material breach of contract.

All certificates required by this Agreement shall be sent directly to the GRANTEE and the Arizona Criminal Justice Commission 1110 W. Washington, Suite 230, Phoenix, AZ 85007. The Commission project/contract number and project description are to be noted on the certificate of insurance. The State of Arizona and the Arizona Criminal Justice Commission reserves the right to require complete, certified copies of all insurance policies required by this Agreement at any time. **DO NOT SEND CERTIFICATES OF INSURANCE TO THE STATE OF ARIZONA'S RISK MANAGEMENT SECTION.**

F. **SUBCONTRACTORS:** Contractor's certificate(s) shall include all subcontractors as insureds under its policies or Contractor shall furnish to the county or local government agency responsible separate certificates for each subcontractor. All coverages for subcontractors shall be subject to the minimum requirements identified above.

G. **APPROVAL:** Any modification or variation from the *insurance requirements* must have prior approval from the State of Arizona Department of Administration, Risk Management Section, whose decision shall be final. Such action will not require a formal contract amendment, but may be made by administrative action.

H. **EXCEPTIONS:** In the event the Contractor or sub-contractor(s) is/are a public entity, then the Insurance Requirements shall not apply. Such public entity shall provide a Certificate of Self-Insurance. If the contractor or sub-contractor(s) is/are a State of Arizona agency, board, commission, or university then none of the above shall apply.

Gila County Sheriff's Office – FY13 DGVCC Application Scores & Comments:

Application Scores

Category	User 860	User 861	User 862	Average
Submission	30	45	50	41.67
Problem Statement	180	165	165	170
Project Summary	160	140	170	156.67
Collaboration Efforts	100	75	95	90
Goals and Objectives	125	100	85	103.33
Evaluation Plan	110	70	110	96.67
Budget	85	75	75	78.33
Internal Controls	30	35	35	33.33
Administrative History	15	25	30	23.33
Total	835	730	815	793.33

Comments

-User 862:

Project Summary:

- There appears to be no plan for ongoing local funding for this project. Sustainability without this grant appears doubtful.

Budget:

- The budget does not delineate which agencies the task force members are from.

Internal Controls:

- 2010 A-133 audit report shows a problem with a previous Byrne grant. Without a 2011 A-133 audit report, there is no way to determine if this problem was resolved.

Administrative History:

- 2010 A-133 audit report shows a problem with a previous Byrne grant. Without a 2011 A-133 audit report, there is no way to determine if this problem was resolved.

-User 861:

-User 860:

Submission: 30; They failed to attach their budget and they had some sections that did not include all information.

Problem Statement: 180; They provide a lot of statistics but fail to cite where the data came from.

Project Summary: 160; They clearly detail out their project but fail to provide a sustainability plan and consider gaps in service

Collaboration Efforts: 100; They provide an adequate listing of partners and several examples of collaborative efforts.

Goals and Objectives: 125; Goals and Objectives are appropriate

Evaluation Plan: 110; They failed to detail out what measures are appropriate and collectable.

Budget: 85; They clearly define needs and matching funds. Budget is not attached.

Internal Controls: 30; There are findings and questioned costs from audit

Administrative History: 15; They have a tendency to not turn in reports and they are a medium audit risk

---

GILA COUNTY ATTORNEY
Daisy Flores

Re: County Attorney's Office approval of IGA pursuant to A.R.S. § 11-952(D).

To whom it may concern:

The County Attorney's Office has reviewed the Intergovernmental Agreement attached to this agenda item and has determined that it is in its "proper form" and "is within the powers and authority granted under the laws of this state to such public agency or public procurement unit" pursuant to A.R.S. § A.R.S. § 11-952(D).

Explanation of the Gila County Attorney's Office Intergovernmental Agreement (IGA) Review

A.R.S. § 11-952(D) requires that

> every agreement or contract involving any public agency or public procurement unit of this state . . . before its execution, shall be submitted to the attorney for each such public agency or public procurement unit, who shall determine whether the agreement is in proper form and is within the powers and authority granted under the laws of this state to such public agency or public procurement unit.

In performing this review, the County Attorney's Office reviews IGAs to see that they are in "proper form" prior to their execution. "Proper form" means that the contract conforms to fundamental contract law, conforms to specific legislative requirements, and is within the powers and authority granted to the public agency. It does not mean that the County Attorney's Office approves of or supports the policy objectives contained in the IGA. That approval is solely the province of the public agency through its elected body.

Likewise, this approval is not a certification that the IGA has been properly executed. Proper execution can only be determined after all the entities entering into the IGA have taken legal action to approve the IGA. There is no statutory requirement for the County Attorney's Office to certify that IGAs are properly executed.

Nonetheless, it is imperative for each public agency to ensure that each IGA is properly executed because A.R.S. § 11-952(F) requires that "[a]ppropriate action … applicable to the governing bodies of the participating agencies approving or extending the duration of the … contract shall be necessary before any such agreement, contract or extension may be filed or become effective." This can be done by ensuring that the governing body gives the public proper notice of the meeting wherein action will be taken to approve the IGA, that the item is adequately described in the agenda accompanying the notice, and that the governing body takes such action. Any questions regarding whether the IGA has been properly executed may be directed to the County Attorney's Office.

Proper execution of IGAs is important because A.R.S. § 11-952(H) provides that "[p]ayment for services under this section shall not be made unless pursuant to a fully approved written contract." Additionally, A.R.S. § 11-952(I) provides that "[a] person who authorizes payment of any monies in violation of this section is liable for the monies paid plus twenty per cent of such amount and legal interest from the date of payment."

The public agency or department submitting the IGA for review has the responsibility to read and understand the IGA in order to completely understand its obligations under the IGA if it is ultimately approved by the public entity's board. This is because while the County Attorney's Office can approve the IGA as to form, the office may not have any idea whether the public agency has the capacity to actually comply with its contractual obligations. Also, the County Attorney's Office does not monitor IGA compliance. Hence the public entity or submitting department will need to be prepared to monitor their own compliance. A thorough knowledge of the provisions of the IGA will be necessary to monitor compliance.

Before determining whether an IGA contract "is in proper form," the County Attorney's Office will answer any questions or concerns the public agency has about the contract. It is the responsibility of the public agency or department submitting the IGA for review to ask any specific questions or address any concerns it has about the IGA to the County Attorney's Office at the same time they submit the IGA for review. Making such an inquiry also helps improve the County Attorney's Office review of the IGA because it will help focus the review on specific issues that are of greatest concern to the public agency. Failing to make such an inquiry when the agency does have issues or concerns will decrease the ability of the County Attorney's Office to meaningfully review the IGA.

ARF-1346 **Consent Agenda Item 4- C**

Regular BOS Meeting

Meeting Date: 08/07/2012

Submitted For:	Barbara Valencia, WIA Department Program Manager	Submitted By:	Barbara Valencia, WIA Department Program Manager, Community Services Division
Department:	Community Services Division	Division:	WIA Department
Fiscal Year:	Program Year 2012	Budgeted?:	No
Contract Dates Begin & End:	July 1, 2009 - June 30, 2014	Grant?:	Yes
Matching Requirement?:	No	Fund?:	Replacement

Information

Request/Subject

Amendment No. 3 to an Intergovernmental Agreement (Contract No. DE101056001) with Arizona Department of Economic Security.

Background Information

The purpose of this Intergovernmental Agreement is to provide the required One-Stop services outlined in the Workforce Investment Act of 1998. As a mandated partner in the One-Stop Delivery System, the Arizona Department of Economic Security shall provide REPAC (Re-Employment and Placement Assistance Center) the necessary office space to perform work duties.

May 4, 2010 - The Board of Supervisors approved the original contract DE101056001.

May 7, 2011 - The Board of Supervisors approved Amendment No. 1, which revised Indirect Charges to 19.54%.

September 20, 2011 - The Board of Supervisors approved Amendment No. 2 which removed work spaces in Lake Havasu.

Evaluation

Gila County REPAC (Re-Employment and Placement Assistance Center) is no longer based in Safford; therfore Contract No. DE101056001 has been terminated.

Conclusion

Amendment No. 3 to the Intergovernmental Agreement between the Arizona Department of Economic Security and Gila County has been revised as follows:

Pursuant to Paragraph 33.3 Termination, Section 3.3.1 at the Contractor's request and mutually agreed upon by both parties, the contract is terminated effective July 1, 2012.

Recommendation

Recommendation to approve Amendment No. 3 to the Intergovernmental Agreement No. DE101056001 between Arizona Department of Economic Security and Gila County pursuant to Paragraph 33.3 Termination, Section 3.3.1 at the Contractor's request and mutually agreed upon by both parties, the contract is terminated effective July 1, 2012.

Suggested Motion

Approval of Amendment No. 3 to an Intergovernmental Agreement (Contract No. DE101056001) between the Arizona Department of Economic Security and Gila County pursuant to Paragraph 33.3 Termination, Section 3.3.1 at the Contractor's request and mutually agreed upon by both parties, the contract is terminated effective July 1, 2012.

Attachments

Amendment No. 3 Contract DE101056001

Amendment No. 2 DE101056001

Amendment No. 1 DE101056001

Original Contract DE101056001

DEPARTMENT OF ECONOMIC SECURIT
Your Partner For A Stronger Arizona

Intergovernmental Agreement
CONTRACT AMENDMENT

1. CONTRACTOR *(Name and address)*	2. CONTRACT ID NUMBER
Gila County Board of Supervisors PO Box 2778 Globe AZ 85502	DE101056001
	3. AMENDMENT NUMBER 03

4. THE PARTIES AGREE TO THE FOLLOWING AMENDMENT

Pursuant to Paragraph 33.3 Termination, Section 3.3.1 at the Contractor's request and mutually agreed upon by both parties, the contract is terminated effective July 1, 2012.

5. **In accordance with A.R.S. § 35-393.06, the Contractor certifies that the Contractor does not have scrutinized business operations in Iran.**

   In accordance with A.R.S. § 35-391.06, the Contractor certifies that the Contractor does not have scrutinized business operations in Sudan.

6. EXCEPT AS PROVIDED HEREIN, ALL TERMS AND CONDITIONS OF THE ORIGINAL CONTRACT AS HERETOFORE CHANGED AND/OR AMENDED REMAIN UNCHANGED AND IN FULL FORCE AND EFFECT. THE AMENDMENT SHALL BECOME EFFECTIVE ON THE DATE OF LAST SIGNATURE UNLESS OTHERWISE SPECIFIED HEREIN. BY SIGNING THIS FORM ON BEHALF OF THE CONTRACTOR, THE SIGNATORY CERTIFIES HE/SHE HAS THE AUTHORITY TO BIND THE CONTRACTOR TO THIS CONTRACT.

7. **ARIZONA DEPARTMENT OF ECONOMIC SECURITY**	8. NAME OF CONTRACTOR **Gila County Board of Supervisors**
SIGNATURE OF AUTHORIZED INDIVIDUAL	SIGNATURE OF AUTHORIZED INDIVIDUAL
TYPED NAME **Elizabeth G. Csaki, CPPB**	TYPED NAME Tommie C. Martin
TITLE **Procurement Manager**	TITLE Chairman, Gila County Board of Supervisors
DATE	DATE

IN ACCORDANCE WITH ARS §11-952 THIS CONTRACT AMENDMENT HAS BEEN REVIEWED BY THE UNDERSIGNED WHO HAVE DETERMINED THAT THIS CONTRACT AMENDMENT IS IN APPROPRIATE FORM AND WITHIN THE POWERS AND AUTHORITY GRANTED TO EACH RESPECTIVE PUBLIC BODY.

ARIZONA ATTORNEY GENERAL'S OFFICE

By: _____
Assistant Attorney General

Date: _____

By: _____
Public Agency Legal Counsel

Date: _____

DEPARTMENT OF ECONOMIC SECURITY

Your Partner For A Stronger Arizona

Intergovernmental Agreement

CONTRACT AMENDMENT

1. CONTRACTOR *(Name and address)*	2. CONTRACT ID NUMBER
Gila County REPAC 5515 South Apache Avenue P. O. Box 2778 Globe, Arizona 85502	DE101056001
	3. AMENDMENT NUMBER 2

4. THE PARTIES AGREE TO THE FOLLOWING AMENDMENT

Pursuant to Section 4.0, Amendments and Modifications, and in accordance with Paragraph 30.0, Occupancy Information, the following changes are made to the original agreement based on the Gila County REPAC written request of July 6, 2011.

1) Paragraph 30.1, Site Location(s) remove: Location I – Lake Havasu
DES Location 421
228 London Bridge Road
Lake Havasu, Arizona 86403

2) Paragraph 30.3: remove the entire paragraph as written.

3) Paragraph 30.4: remove the entire paragraph as written.

5. In accordance with A.R.S. § 35-393.06, the Contractor certifies that the Contractor does not have scrutinized business operations in Iran.
In accordance with A.R.S. § 35-391.06, the Contractor certifies that the Contractor does not have scrutinized business operations in Sudan.

6. EXCEPT AS PROVIDED HEREIN, ALL TERMS AND CONDITIONS OF THE ORIGINAL CONTRACT AS HERETOFORE CHANGED AND/OR AMENDED REMAIN UNCHANGED AND IN FULL FORCE AND EFFECT. THE AMENDMENT SHALL BECOME EFFECTIVE ON THE DATE OF LAST SIGNATURE UNLESS OTHERWISE SPECIFIED HEREIN. BY SIGNING THIS FORM ON BEHALF OF THE CONTRACTOR, THE SIGNATORY CERTIFIES HE/SHE HAS THE AUTHORITY TO BIND THE CONTRACTOR TO THIS CONTRACT.

7. **ARIZONA DEPARTMENT OF ECONOMIC SECURITY**	8. NAME OF CONTRACTOR Gila County Board of Supervisors dba Gila County REPAC
SIGNATURE OF AUTHORIZED INDIVIDUAL	SIGNATURE OF AUTHORIZED INDIVIDUAL
TYPED NAME **Elizabeth G. Csaki, CPPB**	TYPED NAME Michael A. Pastor
TITLE **Contract Administration Unit Manager**	TITLE Chairman, Gila County Board of Supervisors
DATE	DATE

IN ACCORDANCE WITH ARS §11-952 THIS CONTRACT AMENDMENT HAS BEEN REVIEWED BY THE UNDERSIGNED WHO HAVE DETERMINED THAT THIS CONTRACT AMENDMENT IS IN APPROPRIATE FORM AND WITHIN THE POWERS AND AUTHORITY GRANTED TO EACH RESPECTIVE PUBLIC BODY.

ARIZONA ATTORNEY GENERAL'S OFFICE

By: _____
Assistant Attorney General

Date: _____

By: _____
Public Agency Legal Counsel

Date: _____

DEPARTMENT OF ECONOMIC SECURITY

Your Partner For A Stronger Arizona

Intergovernmental Agreement

CONTRACT AMENDMENT

1. CONTRACTOR *(Name and address)*	2. CONTRACT ID NUMBER
Gila County REPAC 5515 South Apache Avenue P. O. Box 2778 Globe, Arizona 85502	DE101056001
	3. AMENDMENT NUMBER 1

4. THE PARTIES AGREE TO THE FOLLOWING AMENDMENT

REVISE

Section 31.0 Indirects

FROM:

31.3.1 Indirect charges as defined by OMB Circular A-87, which states, in part, "that indirect costs are those that have been incurred for common or joint purposes. These costs benefit more than one cost objective and cannot be readily identified with a particular final cost object without effort disproportionate to the results achieved." will be invoiced at 1.12% for Location I and 1.84% for Location II of the total occupancy costs plus monthly voice bill.

~~CHANGE~~ TO:

31.3.1 Indirect charges as defined by OMB Circular A-87, which states, in part, "that indirect costs are those that have been incurred for common or joint purposes. These costs benefit more than one cost objective and cannot be readily identified with a particular final cost object without effort disproportionate to the results achieved." will be invoiced at 19.54% for Location I and 19.54% for Location II of the total occupancy costs plus monthly voice bill.

5. In accordance with A.R.S. § 35-393.06, the Contractor certifies that the Contractor does not have scrutinized business operations in Iran. In accordance with A.R.S. § 35-391.06, the Contractor certifies that the Contractor does not have scrutinized business operations in Sudan.

6. EXCEPT AS PROVIDED HEREIN, ALL TERMS AND CONDITIONS OF THE ORIGINAL CONTRACT AS HERETOFORE CHANGED AND/OR AMENDED REMAIN UNCHANGED AND IN FULL FORCE AND EFFECT. THE AMENDMENT SHALL BECOME EFFECTIVE ON THE DATE OF LAST SIGNATURE UNLESS OTHERWISE SPECIFIED HEREIN. BY SIGNING THIS FORM ON BEHALF OF THE CONTRACTOR, THE SIGNATORY CERTIFIES HE/SHE HAS THE AUTHORITY TO BIND THE CONTRACTOR TO THIS CONTRACT.

7. **ARIZONA DEPARTMENT OF ECONOMIC SECURITY**	8. NAME OF CONTRACTOR Gila County Board of Supervisors dba Gila County REPAC
SIGNATURE OF AUTHORIZED INDIVIDUAL	SIGNATURE OF AUTHORIZED INDIVIDUAL
TYPED NAME **Elizabeth G. Csaki, CPPB**	TYPED NAME Michael A. Pastor
TITLE **Professional Services Unit Manager**	TITLE Chairman, Gila County Board of Supervisors
DATE 6/23/11	DATE 5/17/11

IN ACCORDANCE WITH ARS §11-952 THIS CONTRACT AMENDMENT HAS BEEN REVIEWED BY THE UNDERSIGNED WHO HAVE DETERMINED THAT THIS CONTRACT AMENDMENT IS IN APPROPRIATE FORM AND WITHIN THE POWERS AND AUTHORITY GRANTED TO EACH RESPECTIVE PUBLIC BODY.

ARIZONA ATTORNEY GENERAL'S OFFICE

By: Barbara M. Belcher
Assistant Attorney General

Date: 6/22/11

By:
Public Agency Legal Counsel

Date: 5-17-2011

DEPARTMENT OF ECONOMIC SECURITY
Your Partner For A Stronger Arizona

INTERGOVERNMENTAL AGREEMENT (IGA)

Contract between the Arizona Department of Economic Security ("DES") and Gila County REPAC (Re-Employment and Pre-Layoff Assistance Center).

WHEREAS DES is duly authorized to execute and administer contracts under A.R.S §41-1954 and,

WHEREAS Gila County REPAC is duly authorized to execute and administer contracts under A.R.S. §11-201; **and,**

WHEREAS DES and Gila County REPAC are authorized by A.R.S. §11-952 et seq. to enter into agreements for joint or cooperative action to contract for the services specified in this contract.

THEREFORE, DES and Gila County REPAC agree to abide by all the terms and conditions set forth in this Agreement.

In accordance with A.R.S. § 35-3903.06, Gila County REPAC certifies that Gila County REPAC does not have scrutinized business operations in Iran.

In accordance with A.R.S. § 35-391.06, Gila County REPAC certifies that Gila County REPAC does not have scrutinized business operations in Sudan.

BY SIGNING THIS FORM ON BEHALF OF GILA COUNTY REPAC, THE SIGNATORY CERTIFIES HE/SHE HAS THE AUTHORITY TO BIND GILA COUNTY REPAC TO THIS CONTRACT

FOR AND ON BEHALF OF THE ARIZONA DEPARTMENT OF ECONOMIC SECURITY

Procurement Officer Signature

Elizabeth G. Csaki, CPPB
Printed Name

Professional Services Unit Manager
Title

6/10/2010
Date

DE101056001
DES Contract Number

FOR AND ON BEHALF OF GILA COUNTY REPAC

Signature

Shirley L. Dawson
Printed Name

Chairman, Gila County Board of Supervisors
Title

5/4/10
Date

IN ACCORDANCE WITH A.R.S. §11-952 THIS CONTRACT HAS BEEN REVIEWED BY THE UNDERSIGNED WHO HAVE DETERMINED THAT THIS CONTRACT IS IN APPROPRIATE FORM AND WITHIN THE POWERS AND AUTHORITY GRANTED TO EACH RESPECTIVE PUBLIC BODY.

ARIZONA ATTORNEY GENERAL'S OFFICE

By: _____
Assistant Attorney General

Date: 6/7/10

By: _____
Public Agency Legal Counsel

Date: 4/10/12

1.0 DES VISION AND MISSION STATEMENTS

1.1 DES Vision: Every child, adult, and family in the State of Arizona will be safe and economically secure.

1.2 DES Mission: DES promotes the safety, well-being, and self sufficiency of children, adults, and families."

2.0 PARTIES

2.1 This Intergovernmental Agreement (IGA) is between DES and Gila County REPAC.

3.0 TERM OF AGREEMENT

3.1 **TERM**

The term of this Agreement shall have an effective date of July 1, 2009 and end on June 30, 2014, unless otherwise agreed upon by both parties in writing.

3.2 **EXTENSION**

This agreement may be extended through a written amendment by mutual agreement of the parties.

3.3 **TERMINATION**

3.3.1 This agreement may be terminated by mutual agreement of the parties at any time during the term of this agreement.

3.3.2 Each party shall have the right to terminate this agreement by hand-delivering to the other party written notice of termination at least thirty (30) days prior to the effective date of said termination.

4.0 AMENDMENTS OR MODIFICATIONS

4.1 This Agreement may be amended or modified at any time by mutual agreement. No agent, employee or other representative of either party is empowered to alter any of the terms of the Agreement, unless done in writing and signed by the authorized representative of the respective parties.

4.2 Either party shall give written notice to the other party of any non-materials alteration that affects the provisions of this Agreement. Non-material alterations that do not require a written amendment are as follows:

1. Change of address.
2. Change of telephone number.
3. Change in authorized signatory.
4. Change in the name and/or address of the person to whom notices are to be sent.
5. Changes in contract related personnel positions of Gila County REPAC which do not affect staffing rations, staff qualifications or specific individuals required under this contract.

5.0 DEFINITIONS

5.1 "DES" is the party who is providing the One-Stop location space.

5.2 "DES Site Location" means the facility where the location of integrated program services will occur.

5.3 "Gila County REPAC" is the party who is locating with DES.

5.4 "Agreement" means the executed Intergovernmental Agreement between the governmental parties.

6.0 PURPOSE OF AGREEMENT

6.1 The purpose of this Agreement is to provide the required one-stop services outlined in 20 CFR 662.200.as required under the Workforce Investment Act of 1998. As a mandated partner in the one-stop service delivery system, DES must provide services in the identified one-stop facility within each Local Workforce Investment Area (LWIA). This agreement outlines the provisions under which DES will provide those services.

7.0 MANNER OF FINANCING

7.1 DES/Employment Services is 100% federally funded.

8.0 SERVICE DESCRIPTION

8.1 Provision of services to clients under the Workforce Investment Act of 1998 to consolidate, coordinate, and improve employment, training, literacy, and vocational rehabilitation programs in the United States and for other purposes.

9.0 RESPONSIBILITIES

9.1 DES and Gila County REPAC agree as follows in order to meet the requirements of the Workforce Investment Act of 1998:

9.2 DES shall provide Gil: unty REPAC with 63.0 net square feet o rkspace at Location I – Lake Havasu City (Section 26.1 Occupancy Information) for Gila County REPAC staff and shall provide the necessary common area needed for Gila County REPAC staff to perform work duties.

9.3 DES shall provide Gila County REPAC with 164.0 net square feet of workspace at Location II - Safford (Section 26.1 Occupancy Information) for Gila County REPAC staff and shall provide the necessary common area needed for Gila County REPAC staff to perform work duties.

9.4 Gila County REPAC will reimburse DES for usage of the workspaces and a percentage of the common area used by Gila County REPAC staff at both locations on a monthly basis.

10.0 REPORTING REQUIREMENTS

10.1 Gila County REPAC shall provide to DES the following reports: Not Applicable

11.0 PAYMENT REQUIREMENTS

11.1 DES will invoice Gila County REPAC within ninety (90) days from the date the charges are incurred under this Agreement.

11.2 Invoices shall be submitted, by DES, to the contact's address in Section 12.1.

11.3 Gila County REPAC shall prepare and issue a warrant within thirty (30) days of receipt of the invoice.

11.4 The warrant shall be submitted to contact and address in Section 12.2.

12.0 NOTICES

12.1 All notices to Gila County REPAC regarding this Agreement shall be sent to the following address:

Breena York
Fiscal Manager, REPAC/WIA
Gila County REPAC
5515 South Apache Avenue
P. O. Box 2778
Globe, Arizona 85502
Phone: (928) 425-7631 ext 8652
Fax: (928) 425-9468
E-Mail: byork@co.gila.az.us

12.2 All notices to DES regarding this Agreement shall be sent to the following address:

Kathryn Todd, Programs & Projects Specialist
Budget & Planning Unit
AZ/DES/Employment Administration
Site Code: 734A
1789 West Jefferson Road
Phoenix, Arizona 85007
Phone: 602-542-0929
Fax: 602-541-3690
E-mail: KTodd@azdes.gov

12.3 Notices, requests, or demands given or made upon the parties hereto, pursuant to or in connection with this Agreement, unless otherwise noted, shall be delivered in person or sent by United States Mail, postage prepaid, to the parties at their respective address as indicated above.

12.4 All notices shall reference the contract number(s) as indicated on the signature page of this Agreement.

12.5 The DES Local Office Coordinator staffed at each location site will handle routine non-monetary office and facility related issues or concerns.

13.0 DISPOSITION OF PROPERTY

13.1 It is the purchasing party's responsibility to dispose of furniture or office equipment purchased during the term of this Agreement as authorized in that party's rules and regulations.

14.0 OTHER MATTERS

14.1 Not Applicable

15.0 AVAILABILITY OF FUNDS FOR THE NEXT STATE FISCAL YEAR

15.1 Funds may not prese be available for performance under this ement beyond the current fiscal year. If funds are not allocated and available for the continuance of this Contract, this Contract may be terminated by DES at the end of the period for which funds are available.

15.2 No liability shall accrue to DES in the event this provision is exercised, and DES shall not be obligated or liable for any future payments of for any damages as a result of termination under this paragraph.

16.0 AVAILABILITY OF FUNDS FOR THE CURRENT STATE FISCAL YEAR

16.1 Should the State Legislature enter back into session and reduce the appropriations or for any reason and these goods or services are not funded, the ADES may take any of the following actions:

16.1.1 Reduce payments or units authorized;

16.1.2 Accept a decrease in price offered by Gila County REPAC;

16.1.3 Cancel the Contract;

16.1.4 Cancel the Contract and re-solicit the requirements; or

16.1.5 The Director of DES shall have the sole and unfettered discretion in determining the availability of funds. The DES and Gila County REPAC may mutually agree to reduce reimbursement to the DES when the payment type is Fixed Price with Price Adjustment by executing a contract amendment.

17.0 ARBITRATION

17.1 The parties to this Agreement agree to resolve all disputes arising out of or relating to this Agreement through arbitration, after exhausting applicable administrative review, to the extent required by A.R.S. §12-1518, except as may be required by other applicable statutes (Title 41).

18.0 CANCELLATION FOR CONFLICT OF INTEREST

18.1 Pursuant to A.R.S. §38-511, the State, its political subdivisions or any department or agency of either may, within three years after its execution, cancel any contract without penalty or further obligation, made by the State, its political subdivisions or any department or agency of either if any person significantly involved in initiating, negotiating, securing, drafting or creating the Contract on behalf of the State, its political subdivisions or any department or agency of either is, at any time while the Contract or any extension of the Contract is in effect, an employee or agent of any other party to the Contract in any capacity or a consultant to any other party to the Contract with respect to the matter of the Contract. A cancellation made pursuant to this provision shall be effective when Gila County REPAC received written notice of the cancellation, unless the notice specifies a later time.

19.0 NON-DISCRIMINATION

19.1 Gila County REPAC shall comply with Executive Order 2009-09, which mandates that all persons, regardless of race, color, religion, sex, age, national origin, or political affiliation, shall have equal access to employment opportunities, and all other applicable State and Federal employment laws, rules and regulations, including the Americans with Disabilities Act. Gila County REPAC shall take affirmative action to ensure that applicants for employment and employees are not discriminated against due to race, creed, religion, sex, national origin or disability.

20.0 COMPLIANCE WITH APPLICABLE LAW

20.1 This Agreement shall be governed and interpreted by the laws of the State of Arizona. The materials and services supplied under this Agreement shall comply with all applicable Federal, State and local laws, and Gila County REPAC shall maintain all applicable licenses and permit requirements.

21.0 DATA SHARING AGREEMENT

21.1 If determined by the DES that sharing of confidential data will occur with Gila County REPAC, Gila County REPAC shall complete the DES Data Sharing Request Agreement and submit the completed Agreement to DES/EA Program Designated Staff prior to any work commencing or data shared. A separate Data Sharing Request Agreement shall be required between Gila County REPAC and each DES Program sharing confidential data.

22.0 **INDEMNIFICATION**

22.1 Indemnification for Gila County REPAC

22.1.1 Each Party (as "Indemnitor") agrees to indemnify, defend, and hold harmless the other party (as "Indemnitee") from and against any and all claims, losses, liability, costs, or expenses (including reasonable attorney's fees) (hereinafter collectively referred to as "Claims") arising out of bodily injury of any person (including death) or property damage, but only to the extent that such Claims which result in vicarious/derivative liability to the Indemnitee are caused by the act, omission, negligence, misconduct, or other fault of the Indemnitor, its officers, officials, agents, employees, or volunteers.

23.0 **INSURANCE REQUIREMENTS**
23.1 Insurance Requirements for Governmental Parties to an IGA:
23.1.1 None.

24.0 IT 508 COMPLIANCE
24.1 Unless specifically authorized in the Agreement, any electronic or information technology offered to the State of Arizona under this Agreement shall comply with A.R.S. §41-2531 and 2532 and Section 508 o0f the Rehabilitation Act of 1973, which requires that employees and members of the public shall have access to and use of information technology that is comparable to the access and use by employees and members of the public who are not individuals with disabilities.

25.0 RECORDS AND AUDIT
25.1 Pursuant to A.R.S. §35-214 and §35-215, Gila County REPAC shall retain and shall contractually require each subcontractor to retain all data, books and other records ("Records") relating to this Contract for a period of five (5) years after the completion of the Contract. All records shall be subject to inspection and audit by DES at reasonable times. Upon request, Gila County REPAC shall produce the original of any of all such Records at no cost.

26.0 RIGHT OF OFFSET
26.1 DES shall be entitled to offset against any sums due Gila County REPAC, any expenses or costs incurred by the DES, or damages assessed by the DES concerning Gila County REPAC's non-conforming performance or failure to perform the Agreement, including expenses, costs and damages.

27.0 THIRD-PARTY ANTITRUST VIOLATIONS
27.1 Gila County REPAC assigns to DES any claim for overcharges resulting from antitrust violations concerning materials or services supplied by third parties to Gila County REPAC, toward fulfillment of this contract.

28.0 FINGERPRINTING
28.1 The provisions of A.R.S. §46-141 (as may be amended) are hereby incorporated in their entirety as provisions of this contract. For reference, these provisions include, but are not limited to, the following:
28.1.1 Personnel who are employed by Gila County REPAC, whether paid or not, and who are required or allowed to provide services directly to juveniles or vulnerable adults shall submit a full set of fingerprints to DES for the purpose of obtaining a state and federal criminal records check pursuant to section 41-1750 and Public Law 92-544 or shall apply for fingerprint clearance card within seven (7) working days of employment.
28.1.2 Gila County REPAC shall assume the costs of fingerprint checks and may charge these costs to its fingerprinted personnel. DES may allow all or part of the costs of fingerprint checks to be included as an allowable cost in a contract.
28.1.3 Except as provided in A.R.S. §46-141 (as may be amended), this contract may be cancelled or terminated immediately if a person employed by Gila County REPAC and who has contact with juveniles certifies pursuant to the provisions of A.R.S. §46-141 (as may be amended) that the person is awaiting trial or has been convicted of any of the offenses listed therein in this State, or of acts committed in another state that would be offenses in this State, or if the person does not possess or is denied issuance of a valid fingerprint clearance card.
28.1.4 Personnel who are employed by any Gila County REPAC whether paid or not, and who are required or allowed to provide services directly to juveniles shall certify on forms provided by DES and notarized whether they are awaiting trial on of have ever been convicted of any of the offenses described in A.R.S. §46-141 (as may be amended).
28.1.5 Personnel who are employed by any Gila County REPAC, whether paid or not, and who are required or allowed to provide services directly to juveniles shall on forms provided by DES and notarized whether they have ever committed any act of sexual abuse of a child, including sexual exploitation and commercial sexual exploitation, or any act of child abuse.
28.1.6 Federally recognized Indian tribes or military bases may submit and DES shall accept certifications that state that no personnel who are employed or who will be employed during the contract term have been convicted of, have admitted committing or are awaiting trial on any offense as described in A.R.S. §46-141(H) (as may be amended).

29.0 FEDERAL IMMIGRATION AND NATIONALITY ACT
29.1 By entering into this Agreement, both parties warrant compliance with the Federal Immigration and Nationality Act (FINA) and all other Federal immigration laws and regulations related to the immigration

status of its employe Both parties shall obtain statements fror eir subcontractors certifying compliance and shall furnish the atements to the Procurement Officer upon request. These warranties shall remain in effect through the term of the Agreement. Both parties and their subcontractors shall also maintain Employment Eligibility Verification forms (I-9) as required by the U.S. Department of Labor's Immigration and Control Act for all employees performing work under the Contract. I-9 forms are available for download at USCIS.GOV.

29.2 The State may request verification of compliance for any Gila County REPAC or subcontractor performing work under the Contract. Should the State suspect or find that Gila County REPAC or any of its subcontractors are not in compliance, the State may pursue any and all remedies allowed by law, including, but not limited to: suspension of work, termination of the Contract for default, and suspension and/or debarment of Gila County REPAC. All costs necessary to verify compliance are the responsibility of Gila County REPAC.

30.0 OCCUPANCY INFORMATION

30.1 **Site Location(s)**

Location I – Lake Havasu
DES Location 421
228 London Bridge Road
Lake Havasu, Arizona 86403

Location II – Safford
DES Location 631
1938 Thatcher Blvd
Safford, Arizona 85546

30.2 **Costs**

Determination of the proportionate share of monthly occupancy costs, as well as other costs herein, is based on the square foot allocation.

30.3 **Location I – Lake Havasu**

Total gross square feet of DES's building space is 14,812.00.
Number of DES workstations 64 and 5,552 net square feet.
Number of Gila County REPAC workstations 1 and 63.00 net square feet.
DES's percent of the building area is 98.88% and 14,645.82 gross square feet.
Gila County REPAC's percent of building area is 1.12% and 166.18 gross square feet.

30.4 DES will invoice Gila County REPAC $236.80 for their 1.12% share of the occupancy costs as per Section 30.3. This is based on the annual per square foot rate of $17.10 times 166.18 square feet allocated divided by 12 months.

30.5 **Location II – Safford**

Total gross square feet of DES's building space is 14,706.00.
Number of DES workstations 81 and 8,764.70 net square feet.
Number of Gila County REPAC workstations 2 and 164.00 net square feet.
DES's percent of the building area is 58.38% and 14,435.88 gross square feet.
Gila County REPAC's percent of the building area is 1.84% and 270.12 gross square feet.

30.7 DES will invoice Gila County REPAC $305.90 for their 1.84% share of the occupancy costs as per Section 30.5. This is based on the annual per square foot rate of $13.59 times 270.12 square feet allocated divided by 12 months.

30.8 The occupancy costs for both locations will include the following services:

Electricity
Gas Service
Water/sewer
Trash
Housekeeping, including supplies
Exterior ground maintenance
Janitorial, including routine supplies

30.9 DES shall ensure the maintenance of the structural elements, heating, cooling and other systems of both locations.

30.10 Any requests by Gila County REPAC for changes, alterations or modifications to their work space after move in will be submitted to DES's designated site coordinator for processing of the work order to the appropriate DES personnel. If the work order is approved, the costs will be billed to Gila County REPAC at the address in Section 12.1.

30.11 Any request for an exterior sign(s) must be approved in advance by DES. Signage requests must comply with all City code/ordinance requirements and in non-owned facilities will also require advance approval regarding any sign requirements/standards that they may have. Upon termination of this Agreement, any costs to remove a sign(s) and/or to return the building to its original conditions, installed at Gila County REPAC's request, will be assigned to Gila County REPAC.

30.12 Any changes to DES' direct costs shall be justified, separately negotiated and included as amendments to this Agreement.

31.0 Indirects

31.3.1 Indirect charges as defined by OMB Circular A-87, which states, in part, "that indirect costs are those that have been incurred for common or joint purposes. These costs benefit more than one cost objective and cannot be readily identified with a particular final cost object without effort disproportionate to the results achieved." will be invoiced at 1.12% for Location I and 1.84% for Location II of the total occupancy costs plus monthly voice bill.

32.0 TELECOMMUNICATIONS – VOICE/DATA

32.1 DES will provide the following voice requirements, wiring, and installation as identified for Location I:

- ☒ Instruments/lines
- ☒ Voice Mail
- ☒ T-1 Line(s)
- ☒ Telephone(s)
- ☐ Fax machine – Resource Room/Office Area
- ☒ UI Ring Down Phone Line
- ☒ Maintenance and repair of instruments

32.2 Gila County REPAC will provide the following voice requirements, wiring, and installation as identified for Location I:

- ☐ Instruments/lines
- ☐ Voice Mail
- ☐ T-1 Line(s)
- ☒ Fax machine
- ☒ Maintenance and repair of instruments

32.3 DES will provide the following voice requirements, wiring, and installation as identified for Location II:

- ☒ Instruments/lines
- ☒ Voice Mail
- ☒ T-1 Line(s)
- ☒ Telephone(s)
- ☐ Fax machine – Resource Room/Office Area
- ☒ UI Ring Down Phone Line
- ☒ Maintenance and repair of instruments

32.4 Gila County REPAC will provide the following voice requirements, wiring, and installation as identified for Location II:

- ☐ Instruments/lines
- ☐ Voice Mail
- ☐ T-1 Line(s)
- ☒ Fax machine
- ☒ Maintenance and repair of instruments

32.5 **Voice Communication Charges**

For voice communication charges each month, DES will invoice the actual costs of the voice communications based upon the proportionate share of the voice communications for the preceding month to Gila County REPAC.

32.5.1 The percentage invoiced for Location I will be 1.12%. This is based on the percent of occupancy per Section 30.3 of this Agreement.

32.5.2 The percentage invoiced for Location II will be 1.84%. This is based on the percent of occupancy per Section 30.5 of this Agreement.

32.6 **Voice Communications**

Voice communication adds, moves, or changes are the responsibility of each party. The party requesting the adds, moves, or changes will coordinate the payment with the party owning the equipment. The responsible party renders payment upon invoice by the party owning the equipment.

32.7 **Data Communications**

Data communications is the responsibility of each party. Adds, moves, and changes to data communications is the responsibility of each party.

33.0 OFFICE FURNITURE AND EQUIPMENT

33.1 DES will provide the following at the Location I:

- ☒ Office supplies for DES staff
- ☐ Desk(s)
- ☐ Side chair(s)
- ☐ Computer table (s)
- ☒ 1 Modular workstation(s)
- ☐ Partitioned workstation(s)
- ☒ Chair(s)
- ☐ File cabinet(s)
- ☒ Copier(s)

33.2 Gila County REPAC will provide the following at the Location I:

- ☐ Modular workstation(s)
- ☒ 1 Printer(s)
- ☒ 1 Side chair(s)
- ☐ Computer table (s)
- ☒ Office supplies for Gila County REPAC staff
- ☒ 1 Bookcase(s)
- ☐ Chair(s)
- ☒ 1 File cabinet(s)
- ☐ Copier(s)
- ☒ 1 PC(s)

33.3 DES will provide the following at the Location II:

- ☒ Office supplies f ES staff
- ☐ Desk(s)
- ☐ Side chair(s)
- ☐ Computer table (s)
- ☒ 1 Modular workstations
- ☐ Partitioned w tation(s)
- ☐ Chair(s)
- ☐ File cabinet(s)
- ☒ 1 Copier(s)
- ☒ 1 Office(s)

33.4 Gila County REPAC will provide the following at the Location II:

- ☐ Modular workstation(s)
- ☒ 1 Printer(s)
- ☒ 2 Side chair(s)
- ☐ Computer table (s)
- ☒ Office supplies for Gila County REPAC staff
- ☒ 2 Bookcase(s)
- ☒ 2 Chair(s)
- ☒ 2 File cabinet(s)
- ☐ Copier(s)
- ☒ 2 PC(s)

33.5 The purchasing party shall retain all furniture and office equipment purchased during the term of this Agreement.

33.6 **Equipment Supplies**

The equipment supplies used such as paper, toner and maintenance costs are the responsibility of each program.

33.7 **Office Supplies**

Each party will be responsible for providing its own staff with office supplies needed to perform their work duties.

34.0 VETERANS' PRIORITY PROVISIONS

34.1 This program, funded by the U.S. Department of Labor is subject to the provisions of the "Jobs for Veterans Act" (JVA), Public Law 107-288 (38 USC 4215). The JVA provides priority of service to veterans and spouses of certain veterans for the receipt of employment, training, and placement services. Please note that to obtain priority service, a
veteran must meet the program's eligibility requirements. Training and Employment Guidance Letter (TEGL) No. 5-03(September 16, 2003) provided general guidance on the scope of the veterans priority statute and its effect on current employment and training programs. In addition to the TEGL, a series of questions and answers related to priority of service is posted at http://www.doleta.gov/programs/VETs/ for fifteen (15) programs administered by the Employment and Training Administration (ETA). The Planning Guidance (either the Stand-Alone Planning Guidance at 70 FR 19206 (April 12, 2005)) or the Unified Planning Guidance at 70 FR 19222 (April 12, 2005)) and TEGL 13-06 and TEGL 13-06, Change 1, entitled "Instructions for Workforce Investment Act and Wagner-Peyser Act State Planning and Waiver Requests for Years 3 and 4 of the Strategic Five-Year State Plan (PY 2007 and 2008)" required states to describe the policies and strategies in place to ensure, pursuant to the Jobs for Veterans Act, that priority of service is provided to veterans (and certain spouses) who otherwise meet the eligibility requirements for all employment and training programs funded by the U.S. Department of Labor and administered by ETA. In addition, the states were required to provide assurances that they will comply with the Veterans' Priority Provisions established by the Jobs for Veterans Act (38 USC 4215). States are bound by their approved state plans.

35.0 AMERICANS WITH DISABILITY ACT

35.1 Both parties to this Agreement shall comply with the Americans' with Disabilities Act of 1990 (P.O. 101-336), and as may be amended.

36.0 COMPLIANCE WITH CIVIL RIGHTS ACT

36.1 Both parties shall comply with Title VII of the Civil Rights Act of 1964, as amended, the Age Discrimination in Employment Act, and State Executive Order No. 2009-09, which mandates that all persons, regardless of race, color, religion, sex, age, national origin or political affiliation, shall have equal access to employment opportunities. The parties shall comply with the Rehabilitation Act of 1973, as amended, which prohibits discrimination on the basis of disability, in delivering contract services.

37.0 SALARY AND BONUS LIMITATIONS

37.1 In compliance with Public Law 110-161 (and any other applicable appropriation provision), none of the funds appropriated in the Act under the heading 'Employment and Training' shall be used by a recipient or sub-recipient of such funds to pay the salary and bonuses of an individual, either as direct costs or indirect costs, at a rate in excess of Executive Level II. This limitation shall not apply to vendors providing

goods and services as defined in OMB Circular A-133. Where States are recipients of such funds, States may establish a lower limit for salaries and bonuses of those receiving salaries and bonuses from sub-recipients of such funds, taking into account factors including the relative cost-of-living in the State, the compensation levels for comparable State or local government employees, and the size of the organizations that administer Federal programs involved including Employment & Training Administration programs. See Training and Employment Guidance Letter number 5-06 for further clarification.

38.0 EMPLOYMENT DISCLAIMER PROVISION

38.1 This Agreement is not intended to constitute, create, give rise to or otherwise recognize a joint venture, partnership, or format business association or organization of any kind and the rights and obligations of the parties shall be only those expressly set forth in the Agreement.

39.0 CONFIDENTIALITY OF RECORDS

39.1 Gila County REPAC shall establish and maintain procedures and controls that are acceptable to the State for the purpose of assuring that no information contained in it's records or obtained from the State or from others in carrying out its functions under the MASGER PROGRAM AGREEMENT shall be used by or disclosed by it, it's agents, officers, or employees, except as required to efficiently perform duties under the contract. Persons requesting such information shall be referred to the State.

40.0 OFFSHORE PERFORMANCE OF WORK PROHIBITED

40.1 Due to security and identify protection concerns, direct services under this Agreement shall be performed within the borders of the United States. Any services that are described in the specifications or Scope of Work that directly serve the State of Arizona or its clients, and may involve access to secure or sensitive data or personal client data or development or modification of software for the State shall be performed within the borders of the United States. Unless specifically stated otherwise in the specifications, this definition does not apply to indirect or "overhead" services, redundant back-up services or services that are incidental to the performance of the Agreement. This provision applies to work performed by subcontractors at all tiers.

41.0 ATTACHMENTS

41.1 Gila County REPAC shall comply with the attached:

41.1.1 Attachment 1 Assurances and Certification Signature Page
41.1.2 Attachment 2 Procurement Contract Provisions
41.1.3 Attachment 3 Retention and Access Requirements for Records
41.1.4 Attachment 4 Assurances – Non-Construction Programs
41.1.5 Attachment 5 Certification Regarding Debarment, Suspension, and Other Responsibility Matters
41.1.6 Attachment 6 Certification Regarding Lobbying
41.1.7 Attachment 7 Drug-Free Workplace Certification
41.1.8 Attachment 8 Nondiscrimination & Equal Opportunity Assurance
41.1.9 Attachment 9 Certification of Release of Information
41.1.10 Attachment 10 Certificate Regarding Environmental Tobacco Smoke
41.1.11 Attachment 11 Other Administrative Requirements
41.1.12 Attachment 12 OMB Circular A-87 Revised
41.1.13 Attachment 13 WIA Title 1B Fraud and Abuse Policy of the Workforce Investment Act

42.0 EXHIBITS

42.1 The following list of exhibits constitutes an integral part of subject Agreement:

42.1.1 NONE

ASSURANCES AND CERTIFICATIONS – SIGNATURE PAGE

The Department of Labor will not award a grant or agreement where the grantee/recipient has failed to accept the ASSURANCES AND CERTIFICATIONS contained in this section. Therefore, Department of Economic Security/Employment Administration cannot award a grant or agreement where the sub-grantee/sub-recipient has failed to accept the ASSURANCES AND CERTIFICATIONS contained in this section. By signing and returning this signature page, the grantee/recipient is providing the certifications set forth below:

A. **Assurances - Non-Construction Programs (SF 424 B)**

B. **Certification Regarding Debarment and Suspension.. (29 CFR Part 98)**

C. **Certification Regarding Lobbying (29 CFR Part 93)**

D. **Drug Free Workplace Certification (29 CFR Part 98)**

E. **Nondiscrimination & Equal Opportunity Assurance (29 CFR Part 37),**

F. **Certification of Release of Information**

G. **Certification Regarding Environmental Tobacco Smoke**

H. **Other Administrative Requirements**

I. **OMB Circular A-87 Revised**

APPLICANT NAME and LEGAL ADDRESS:

NAME
ADDRESS
CITY, STATE, ZIP

If there is any reason why one of the assurances or certifications listed cannot be signed, please explain. Gila County REPAC need only submit and return this signature page with the Intergovernmental Service Agreement. All other instructions shall be kept on file by Gila County REPAC.

Shirley L Dawson — Chairman
SIGNATURE OF AUTHORIZED CERTIFYING OFFICIAL — TITLE

Gila County Board of Supervisors — 5/4/10
ORGANIZATION — DATE SUBMITTED

ATTACHMENT 2

29 CFR 97.36 – Procurement - Contract Provisions

(i) Contract provisions. Gila County REPAC's and its sub-grantee's contracts must contain provisions in paragraph (i) of this section. Federal agencies are permitted to require changes, remedies, changed conditions, access and records retention, suspension of work, and other clauses approved by the Office of Federal Procurement Policy.

(1) Administrative, contractual, or legal remedies in instances where Department of Economic Security violates or breaches contract terms, and provide for such sanctions and penalties as may be appropriate. (Contracts more than the simplified acquisition threshold)

(2) Termination for cause and for convenience by Gila County REPAC or it's sub-grantee including the manner by which it will be effected and the basis for settlement. (All contracts in excess of $10,000)

(3) Compliance with Executive Order 11246 of September 24, 1965, entitled ``Equal Employment Opportunity," as amended by Executive Order 11375 of October 13, 1967, and as supplemented in Department of Labor regulations (41 CFR chapter 60). (All construction contracts awarded in excess of $10,000 by Gila County REPAC and the Department of Economic Security or sub-grantees)

(4) Compliance with the Copeland ``Anti-Kickback" Act (18 U.S.C. 874) as supplemented in Department of Labor regulations (29 CFR Part 3). (All contracts and sub-grants for construction or repair)

(5) Compliance with the Davis-Bacon Act (40 U.S.C. 276a to 276a-7) as supplemented by Department of Labor regulations (29 CFR Part 5). (Construction contracts in excess of $2,000 awarded by Gila County REPAC and sub-grantees when required by Federal grant program legislation)

(6) Compliance with Sections 103 and 107 of the Contract Work Hours and Safety Standards Act (40 U.S.C. 327-330) as supplemented by Department of Labor regulations (29 CFR Part 5). (Construction contracts awarded by Gila County REPAC and sub-grantees in excess of $2,000, and in excess of $2,500 for other contracts which involve the employment of mechanics or laborers)

(7) Notice of awarding agency requirements and regulations pertaining to reporting.

(8) Notice of awarding agency requirements and regulations pertaining to patent rights with respect to any discovery or invention which arises or is developed in the course of or under such contract.

(9) Awarding agency requirements and regulations pertaining to copyrights and rights in data.

(10) Access by the Gila County REPAC, the sub-grantee, the Federal grantor agency, the Comptroller General of the United States, or any of their duly authorized representatives to any books, documents, papers, and records of the Department of Economic Security which are directly pertinent to that specific contract for the purpose of making audit, examination, excerpts, and transcriptions.

(11) Retention of all required records for three years after Gila County REPAC or sub-grantees make final payments and all other pending matters are closed.

(12) Compliance with all applicable standards, orders, or requirements issued under section 306 of the Clean Air Act (42 U.S.C. 1857(h)), section 508 of the Clean Water Act (33 U.S.C. 1368), Executive Order 11738, and Environmental Protection Agency regulations (40 CFR part 15). (Contracts, subcontracts, and sub-grants of amounts in excess of $100,000)

(13) Mandatory standards and policies relating to energy efficiency which are contained in the state energy conservation plan issued in compliance with the Energy Policy and Conservation Act (Pub. L. 94-163, 89 Stat. 871). [53 FR 8069, Mar. 11, 1988, as amended at 60 FR 19639, 19643, Apr. 19. 1995]

29 CFR 97.42 - Retention and access requirements for records

(a) **Applicability.**

(1) This section applies to all financial and programmatic records, supporting documents, statistical records, and other records of Gila County REPAC or sub-grantees which are:

(i) Required to be maintained by the terms of this part, program regulations or the grant agreement, or

(ii) Otherwise reasonably considered as pertinent to program regulations or the grant agreement.

(2) This section does not apply to records maintained by Gila County REPAC or sub-grantees. For a requirement to place a provision concerning records in certain kinds of contracts, see Sec. 97.36(i)(10).

(b) **Length of retention period.**

(1) Except as otherwise provided, records must be retained for three years from the starting date specified in paragraph (c) of this section.

(2) If any litigation, claim, negotiation, audit or other action involving the records has been started before the expiration of the 3-year period, the records must be retained until completion of the action and resolution of all issues which arise from it, or until the end of the regular 3-year period, whichever is later.

(3) To avoid duplicate recordkeeping, awarding agencies may make special arrangements with Gila County REPAC and sub-grantees to retain any records which are continuously needed for joint use. The awarding agency will request transfer of records to its custody when it determines that the records possess long-term retention value. When the records are transferred to or maintained by the Federal agency, the 3-year retention requirement is not applicable to the Gila County REPAC or sub-grantee.

(c) **Starting date of retention period**

(1) General. When grant support is continued or renewed at annual or other intervals, the retention period for the records of each funding period starts on the day the Gila County REPAC or sub-grantee submits to the awarding agency it's single or last expenditure report for that period. However, if grant support is continued or renewed quarterly, the retention period for each year's records starts on the day the Gila County REPAC submits its expenditure report for the last quarter of the Federal fiscal year. In all other cases, the retention period starts on the day the Gila County REPAC submits its final expenditure report. If an expenditure report has been waived, the retention period starts on the day the report would have been due.

(2) Real property and equipment records. The retention period for real property and equipment records starts from the date of the disposition or replacement or transfer at the direction of the awarding agency.

(3) Records for income transactions after grant or sub grant support. In some cases Gila County REPAC must report income after the period of grant support. Where there is such a requirement, the retention period for the records pertaining to the earning of the income starts from the end of the Gila County REPAC's fiscal year in which the income is earned.

(4) Indirect cost rate proposals, cost allocations plans, etc. This paragraph applies to the following types of documents, and their supporting records: indirect cost rate computations or proposals, cost allocation plans, and any similar accounting computations of the rate at which a particular group of costs is chargeable (such as computer usage chargeback rates or composite fringe benefit rates).

(i) If submitted for negotiation. If the proposal, plan, or other computation is required to be submitted to the Federal Government (or to the Gila County REPAC) to form the basis for negotiation of the rate, then the 3-year retention period for its supporting records starts from the date of such submission.

(ii) If not submitted for negotiation. If the proposal, plan, or other computation is not required to be submitted to the Federal Government (or to the Gila County REPAC) for negotiation purposes, then the 3-year retention period for the proposal plan, or computation and its supporting

recorc arts from end of the fiscal year (or other a unting period) covered by the proposal, plan, or other computation.

ATTACHMENT 3 CONTINUED

(d) **Substitution of microfilm**. Copies made by microfilming, photocopying, or similar methods may be substituted for the original records.

(e) **Access to records**

(1) Records of Gila County REPAC and sub-grantees. The awarding agency and the Comptroller General of the United States, or any of their authorized representatives, shall have the right of access to any pertinent books, documents, papers, or other records of Gila County REPAC and sub-grantees which are pertinent to the grant, in order to make audits, examinations, excerpts, and transcripts.

(2) Expiration of right of access. The rights of access in this section must not be limited to the required retention period but shall last as long as the records are retained.

(f) **Restrictions on public access**. The Federal Freedom of Information Act (5 U.S.C. 552) does not apply to records unless required by Federal, State, or local law, Gila County REPAC and sub-grantees are not required to permit public access to their records.

ATTACHMENT 4
ASSURANCES NON-CONSTRUCTION PROGRAMS

Public reporting burden for this collection of Information is estimated to average 15 minutes per response, including time for reviewing instructions, searching existing data sources, gathering and maintaining the data needed, and completing and reviewing the collection of information. Send comments regarding the burden estimate or any other aspect of this collection of information, including suggestions for reducing this burden, to the Office of Management and Budget, Paperwork Reduction Project (0348-0040), Washington, DC 20503.

PLEASE DO NOT RETURN YOUR COMPLETED FORM TO THE OFFICE OF MANAGEMENT AND BUDGET. SEND IT TO THE ADDRESS PROVIDED BY THE SPONSORING AGENCY.

NOTE: Certain of these assurances may not be applicable to your project or program. If you have questions, please contact the awarding agency. Further, certain Federal awarding agencies may require applicants to certify to additional assurances. If such is the case, you will be notified.

As the duly authorized representative of the applicant, I certify that the applicant:

1. Has the legal authority to apply for Federal assistance and the institutional, managerial and financial capability (including funds sufficient to pay the non-Federal share of project cost) to ensure proper planning, management and completion of the project described in this application.

2. Will give the awarding agency, the Comptroller General of the United States and, if appropriate, the State, through any authorized representative, access to and the right to examine all records, books, papers, or documents related to the award; and will establish a proper accounting system in accordance with generally accepted accounting standards or agency directives.

3. Will establish safeguards to prohibit employees from using their positions for a purpose that constitutes or presents the appearance of personal or organizational conflict of interest, or personal gain.

4. Will initiate and complete the work within the applicable time frame after receipt of approval of the awarding agency.

5. Will comply with the Intergovernmental Personnel Act of 1970 (42 U.S.C. §~4728-4763) relating to prescribed standards for merit systems for programs funded under one of the 19 statutes or regulations specified in Appendix A of OPM's Standards for a Merit System of Personnel Administration (5 C.F.R. 900, Subpart F).

6. Will comply with all Federal statutes relating to nondiscrimination. These include but are not limited to: (a) Title VI of the Civil Rights Act of 1964 (P.L. 88-352) which prohibits discrimination on the basis of race, color or national origin; (b) Title IX of the Education Amendments of 1972, as amended (20 U.S.C. §~1681-1683, and 1685-1686), which prohibits discrimination on the basis of sex; (C) Section 504 of the Rehabilitation Act of 1973, as amended (29 U.S.C. §794), which prohibits discrimination on the basis of handicaps; (d) the Age Discrimination Act of 1975, as amended (42 U.S.C. §~6101-6107), which prohibits discrimination on the basis of age; (e) the Drug Abuse Office and Treatment Act of 1972 (P.L. 92-255), as amended, relating to nondiscrimination on the basis of drug abuse; (f) the Comprehensive Alcohol Abuse and Alcoholism Prevention, Treatment and Rehabilitation Act of 1970 (P.L. 91-616), as amended, relating to nondiscrimination on the basis of alcohol abuse or alcoholism; (g) §~523 and 527 of the Public Health Service Act of 1912 (42 U.S.C. §~290 dd-3 and 290 ee 3), as amended, relating to confidentiality of alcohol and drug abuse patient records; (h) Title VIII of the Civil Rights Act of 1968 (42 U.S.C. §~3601 et seq.), as amended, relating to nondiscrimination in the sale, rental or financing of housing; (i) any other nondiscrimination provisions in the specific statute(s) under which application for Federal assistance is being made; and, (j) the requirements of any other nondiscrimination statute(s) which may apply to the application.

7. Will comply, or has already complied, with the requirements of Titles II and III of the Uniform Relocation Assistance and Real Property Acquisition Policies Act of 1970 (P.L. 91-646) which provide for fair and equitable treatment of persons displaced or whose property is acquired as a result of Federal or federally-assisted programs. These requirements apply to all interests in real property acquired for project purposes regardless of Federal participation in purchases.

8. Will comply, as applicable, with provisions of the Hatch Act (5 U.S.C. §~1501-1508 and 7324-7328) which limit the political activities of employees whose principal employment activities are funded in whole or in part with Federal funds.

9. Will comply, as applicable, with the provisions of the Davis-Bacon Act (40 U.S.C. §~276a to 276a-7), the Copeland Act (40 U.S.C. §276c and 18 U.S.C. §874), and the Contract Work Hours and Safety Standards Act (40 U.S.C. §~327-333), regarding labor standards for federally-assisted construction sub-agreements.

10 Will comply, if applicable, with flood insurance purchase requirements of Section 102(a) of the Flood Disaster Protection Act of 1973 (P.L. 93-234) which requires recipients in a special flood hazard area to participate in the program and to purchase flood insurance if the total cost of insurable construction and acquisition is $10,000 or more.

11. Will comply with environmental standards which may be prescribed pursuant to the following: (a) institution of environmental quality control measures under the National Environmental Policy Act of 1969 (P.L. 91-190) and Executive Order (EO) 11514; (b) notification of violating facilities pursuant to EO 11738; (c) protection of wetlands pursuant to EO 11990; (d) evaluation of flood hazards in floodplains in accordance with EO 11988; (e) assurance of project consistency with the approved State management program developed under the Coastal Zone Management Act of 1972 (16 U.S.C. §~1451 et seq.); (f) conformity of Federal actions to State (Clean Air) Implementation Plans under Section 176(c) of the Clean Air Act of 1955, as amended (42 U.S.C. §~7401 et seq.); (9) protection of underground sources of drinking water under the Safe Drinking Water Act of 1974, as amended (P.L. 93-523); and, (h) protection of endangered species under the Endangered Species Act of 1973, as amended (P.L. 93-205).

12. Will comply with the Wild and Scenic Rivers Act of 1968 (16 U.S.C. §~1271 et seq.) related to protecting components or potential components of the national wild and scenic rivers system.

13. Will assist the awarding agency in assuring compliance with Section 106 of the National Historic Preservation Act of 1966, as amended (16 U.S.C. §470) EO 11593 (identification and protection of historic properties), and the Archaeological and Historic Preservation Act of 1974 (16 U.S.C. §~469a-1 et seq.).

14. Will comply with P.L. 93-348 regarding the protection of human subjects involved in research, development, and related activities supported by this award of assistance.

15. Will comply with the Laboratory Animal Welfare Act of 1966 (P.L. 89-544, as amended, 7 U.S.C. §~2131 et seq.) pertaining to the care, handling, and treatment of warm blooded animals held for research, teaching, or other activities supported by this award of assistance.

16. Will comply with the Lead-Based Paint Poisoning Prevention Act (42 U.S.C. §~4801 at seq.) which prohibits the use of lead-based paint in construction or rehabilitation of residence structures.

17. Will cause to be performed the required financial and compliance audits in accordance with the Single Audit Act Amendments of 1996 and 0MB Circular No. A-133, "Audits of States, Local Governments, and Non-Profit Organizations."

18. Will comply with all applicable requirements of all other Federal laws, executive orders, regulations, and policies governing this program.

ATTACHMENT 5

CERTIFICATION REGARDING

DEBARMENT, SUSPENSION, AND OTHER RESPONSIBILITY MATTERS

PRIMARY COVERED TRANSACTIONS

1. The prospective primary participant certifies to the best of its knowledge and belief, that it and its principals:

   (a) Are not presently debarred, suspended, proposed for debarment, declared ineligible, or voluntarily excluded by any Federal department or agency;

   (b) Have not within a three-year period preceding this proposal been convicted of or had a civil judgment rendered against them for commission of fraud or a criminal offense in connection with obtaining, attempting to obtain, or performing a public (Federal, State or local) transaction or contract under a public transaction; violation of Federal or State antitrust statutes or commission of embezzlement, theft, forgery, bribery, falsification or destruction of records, making false statements, or receiving stolen property;

   (c) Are not presently indicted for or otherwise criminally or civilly charged by a governmental entity (Federal, State or local) with commission of any of the offenses enumerated in paragraph (1)(b) of this certification; and

   (d) Have not within a three-year period preceding this application/proposal had one or more public transactions (Federal, State or local) terminated for cause or default.

2. Where the prospective primary participant is unable to certify to any of the statements in this certification, such prospective participant shall attach an explanation to this proposal or plan.

ATTACHMENT 6

CERTIFICATION REGARDING LOBBYING

Certification of Contracts, Grants, Loans, and Cooperative Agreements

The undersigned certifies, to the best of his or her knowledge and belief, that:

1. No Federal appropriated funds have been paid or will be paid, by or on behalf of the undersigned, to any person for influencing or attempting to influence an officer or employee of any agency, a Member of Congress, an officer or employee of Congress, or an employee of a Member of Congress in connection with the awarding of any Federal contract, the making of any Federal grant, the making of any Federal loan, the entering into of any cooperative agreement, and the extension, continuation, renewal, amendment, or modification of any Federal contract, grant, loan, or cooperative agreement.

2. If any funds other than Federal appropriated funds have been paid or will be paid to any person for influencing or attempting to influence an officer or employee of any agency, a Member of Congress, an officer or employee of Congress, or an employee of a Member of Congress in connection with this Federal contract, grant, loan, or cooperative agreement, the undersigned shall complete and submit Standard Form-LLL, "Disclosure Form to Report Lobbying," in accordance with its instructions.

3. The undersigned shall require that the language of this certification be included in the award documents for all sub-awards at all tiers (including subcontracts, sub-grants, and contract under grants, loans, and cooperative agreements) and that all sub-recipients shall certify and disclose accordingly.

This certification is a material representation of fact upon which reliance was placed when this transaction was made or entered into. Submission of this certification is prerequisite for making or entering into this transaction imposed by section 1352, Title 31, U.S. Code. Any person who fails to file the required certification shall be subject to a civil penalty of not less than $10,000 and not more than $100,000 for each such failure.

ATTACHMENT 7

DRUG-FREE WORKPLACE CERTIFICATION

Gila County REPAC, Arizona, dba Gila County REPAC Community & Economic Development Department certifies it will continue to provide a drug-free workplace by:

1. Publishing a statement notifying employees that the unlawful manufacture, distribution, dispensing, possession, or use of a controlled substance is prohibited in the grantee's workplace and specifying the actions that will be taken against employees for violation of such prohibition;

2. Establishing an ongoing drug-free awareness program to inform employees about:
   A. The dangers of drug abuse in the workplace;
   B. The grantee's policy of maintaining a drug-free workplace;
   C. Any available drug counseling, rehabilitation, and employee assistance programs; and
   D. The penalties that may be imposed upon employees for drug abuse violations occurring in the workplace;

3. Making it a requirement that each employee to be engaged in the performance of the grant be given a copy of the statement required by paragraph (1);

4. Notifying the employee in the statement required by paragraph (1) that, as a condition of employment under the grant, the employee will:

   A. Abide by the terms of the statement; and
   B. Notify the employer in writing of his or her conviction for a violation of a criminal drug statute occurring in the workplace no later than five calendar days after such conviction;

5. Notifying the agency in writing, within ten calendar days after receiving notice under subparagraph (4)(B) from an employee or otherwise receiving actual notice of such conviction. Employers of convicted employees must provide notice, including position title, to every grant officer or other designee on whose grant activity the convicted employee was working, unless the Federal agency has designated a central point for the receipt of such notices. Notice shall include the identification number (s) of each affected grant;

6. Taking one of the following actions, within 30 calendar days of receiving notice under subparagraph (4)(B), with respect to any employee who is so convicted:

   A. Taking appropriate personnel action against such an employee, up to and including termination, consistent with the requirements of the Rehabilitation Act of 1973, as amended; or
   B. Requiring such employee to participate satisfactorily in a drug abuse assistance or rehabilitation program approved for such purposes by a Federal, State, or local health, law enforcement, or other appropriate agency;

7. Making a good faith effort to continue to maintain a drug-free workplace through implementation of paragraphs (1), (2), (3), (4), (5) and (6).

Gila County REPAC may insert in the space provided below the site(s) for the performance of work done in connection with the specific grant:

Place of Performance (Street address, city, Gila County REPAC, state, zip code):

_____
_____
_____
_____

Check ( ) if there are workplaces on file that are not identified here.

ATTACHMENT 8

NON-DISCRIMINATION & EQUAL OPPORTUNITY ASSURANCE

Note: This particular assurance (portions which are duplicated elsewhere in other assurances) is applicable to the extent that the program activities are conducted as part of the One Stop delivery system (See 29 CFR 37.2).

As a condition to the award of financial assistance from the Department of Labor under Title I of WIA, the grant applicant assures that it will comply fully with the nondiscrimination and equal opportunity provisions of the following laws:

(1) Section 188 of the Workforce Investment Act of 1998 (WIA), which prohibits discrimination against all individuals in the United States on the basis of race, color, religion, sex, national origin, age, disability, political affiliation, or belief, and against beneficiaries on the basis of either citizenship/status as a lawfully admitted immigrant authorized to work in the United States or participation in any WIA Title I B financially assisted program or activity;

(2) Title VI of the Civil Rights Act of 1964, as amended, which prohibits discrimination on the basis of race, color, and national origin;

(3) Section 504 of the Rehabilitation Act of 1973, as amended, which prohibits discrimination against qualified individuals with disabilities;

(4) The Age Discrimination Act of 1975, as amended, which prohibits discrimination on the basis of age; and

(5) Title IX of the Education Amendments of 1972, as amended, which prohibits discrimination on the basis of sex in educational programs.

The grant applicant also assures that it will comply with 29 CFR Part 37 and all other regulations implementing the laws listed above. This assurance applies to the grant applicant's operation of the WIA Title I B financially assisted program or activity, and to all agreements the grant applicant makes to carry out the WIA Title I B financially assisted program or activity. The grant applicant understands that the United States has the right to seek judicial enforcement of this assurance.

ATTACHMENT 9

CERTIFICATION OF RELEASE OF INFORMATION

This certification is executed with the signing of the certification signature page and submission with the Agreement package.

CERTIFICATION FOR RELEASE OF INFORMATION

Each grantee must indicate the Federal Share of the grant and the percentage of the grant financed by the Federal share. In this regard, the Certificate for Release of Information is cited below for this purpose. The submission of a signed application containing a copy of this Certification for Release of Information, "shall constitute the necessary certification."

CERTIFICATION

"The grantee agrees that when issuing statements, press releases, requests for proposals, bid solicitations or other documents describing the grant project or program, the grantee shall clearly state (1) the percentage of the total cost of the program or project which will be or is being financed with Federal money, and (2) the dollar amount of Federal funds for the project or program; except when, the project or program is competitive."

As the duly authorized representative of the applicant, I hereby certify by signing the certification signature page that the applicant will comply with the assurance and certifications in Part III of the Solicitation for Grant Applications (SGA).

ATTACHMENT 10

CERTIFICATION REGARDING ENVIRONMENTAL TOBACCO SMOKE

Public Law 103-227, Part C:

Environmental Tobacco Smoke, also known as the Pro-Children Act of 1994 (Act), requires that smoking not be permitted in any portion of any indoor routinely owned or leased or contracted for by an entity and used routinely or regularly for provision of health, day care, education, or library services to children under the age of 18, if the services are funded by Federal programs either directly or through State or local governments, by Federal grant, contract, loan or loan guarantee. The law does not apply to children's services provided in private residences, facilities funded solely by Medicare or Medicaid funds, and portions of facilities used for inpatient drug or alcohol treatment. Failure to comply with the provisions of the law may result in the imposition of a civil monetary penalty of up to $1000 per day and/or the imposition of an administrative compliance order on the responsible entity.

By signing and submitting the certification signature page with this application the applicant/grantee certifies that it will comply with the requirements of the Act. The applicant/grantee further agrees that it will require the language of this certification be included in any sub-awards which contain provisions for the children's services and that all sub-grantees shall certify accordingly.

ATTACHMENT 11

OTHER ADMINISTRATIVE REQUIREMENTS

In performing its responsibilities under this Agreement, the grantee further certifies and assures that it will fully comply with:

29 CFR Part 97 (Uniform Administrative Requirements for Grants and Cooperative Agreements to State and Local Governments) and the 29 CFR Part 97 clarifications and exceptions specified below:

29 CFR 97.25 - Program Income.

Gila County REPAC **shall** use the Addition method for computing Program Income. The grantee may deduct those costs incident to generation of program income from gross income to determine net program income provided that such costs were not charged to grant funds under this Agreement.

29 CFR 97.31 – Property

Real property includes both real property acquired under this Agreement and real property transferred to this Agreement from prior agreements.

29 CFR 97.32 - Equipment and 29 CFR 97.33 – Supplies

Equipment and Supplies includes both equipment and supplies acquired under this Agreement and equipment and supplies transferred to this Agreement from prior agreements.

Financial Reporting

29 CFR 97.41 (a) and (b)

These are the general parameters for financial reporting.

29 CFR 97.41 (b)

The Employment and Training Administration (ETA) is implementing a new Office of Management and Budget (OMB) approved quarterly financial reporting form to be used for financial reporting starting with the quarter which will end September 30, 2007. The reporting instructions for the newly approved form will be issued shortly and will require that State grantees use the ETA Web-based reporting system for the filing of quarterly financial status reports. A separate report must be completed each quarter for each funding source (See Fund Type) provided under this Agreement until such time as such funds for a given year have been expended or expired (i.e., expired due to statutory provision or expired due to terms of a specific grant/plan, as applicable). The software provided to grantees by the grantor agency will contain a menu listing all funding source reporting options to assist the grantees in full reporting coverage.

29 CFR 97.41 (b) (2)

This requires Gila County REPAC to report program outlays (expenditures) on an accrual basis.

29 CFR 97.41 (c) (1)

The grantee is exempted from the requirement to submit the SF-272, Federal Cash Transactions Report, and the SF-272a, Federal Cash Transactions Report, continuation sheet, provided that the grantee files the SF- 272 (e) electronic report in accordance with the HHS Payment Management System requirements.

ATTACHMENT 12

OMB Circular A-87 Revised

Cost Principles for State and Local Governments and the provisions and exceptions specified below:

For those selected items of cost requiring prior approval, the authority to grant or deny approval is delegated to the State for programs funded under this Agreement except that the Secretary reserves the right to require transfer of title on nonexpendable Automated Data Processing Equipment in accordance with the provisions at 29 CFR 97.32 (g). **Pursuant to 20 CFR 652.8(d)(2),** the Secretary reserves the right to exercise prior approval authority in other areas, after providing advance notice to the State. **Accordingly, capital expenditures for real property are allowable as a direct cost only if approved by the Secretary (Grantor).**

For personnel benefit costs charged to Wagner-Peyser Act funds on behalf of Employment Service (ES) employees who are members of fringe benefit plans which do not meet the requirements of OMB Circular A-87, Attachment B, Item 11, the costs of employer contributions or expenses incurred for ES fringe benefit plans are allowable as an addition to OMB Circular A-87, provided that:

(i) For retirement plans: (A) all covered employees joined the plan before October 1, 1983; (B) the plan is authorized by State law; (C) the plan was previously approved by the Secretary; (D) the plan is insured by a private carrier which is licensed to operate this type of plan in the applicable State; and (E) any dividends or similar credits because of participation in the plan are credited against the next premium falling due under the contract;

(ii) For all ES fringe benefit plans other than retirement plans, if the Secretary granted a time extension after October 1, 1983, to the existing approval of such a plan, costs of the plan are allowable until such time as the plan is comparable in cost and benefits to fringe benefit plans available to other similarly employed ES employees. At such time as the cost and benefits of an approved fringe benefit plan are equivalent to the cost and benefits of plans available to other similarly employed ES employees, the time extension will cease and the cited requirements of OMB Circular A-87 will apply; and

(iii) For retirement plans and all other fringe benefit plans covered in (i) and (ii) of this paragraph, any additional costs resulting from improvements of the plans made after October 1, 1983, are not chargeable to funds under this Agreement.

29 CFR PART 96 and 99 (Audit Requirements)

These requirements apply as supplemented by the Wagner-Peyser Act regulations at 20 CFR 652.8(f).

ATTACHMENT 13

WIA Title 1B Fraud and Abuse Policy of the Workforce Investment Act

POLICY: WIA regulations require that incidents of fraud, waste, abuse or other criminal activity be reported through the incident reporting to the Department of Labor, Office of Inspector General. All Staff and contracted service providers, in accordance with Federal regulation shall include a system of internal controls which ensure resource use is consistent with laws, regulations and policies; are safe guarded against waste, loss and gross mismanagement of funds; are alerted to the potential of fraud. Abuse and/or criminal acts in the WIA programs through conflict of interest, falsification of records or reports and misappropriation of funds or other assets; an lastly, be aware of obligations to report such activities.

PROCEDURES: Reporting of Fraud & Abuse: Information and complaints involving criminal fraud, waste, abuse or other criminal activity by a LWIA or staff must be reported immediately. Reports are made through the Department's Incident Reporting System to the DOL Office of Inspector General, Office of Investigations, Room S5514, 200 Constitution Avenue NW, Washington, D.C. 20210, or to the corresponding Regional Inspector General for Investigations, with a copy simultaneously provided to the Arizona State Attorney General's Office. **The OIG/DOL Hotline number is 1-800-347-3756.** Email notifications can be made to the Office of Inspector General (OIG) at www.oig.dol./hotnet1.htm, or, by FAX to 202-693-5210.

All grantees/Gila County REPACs staff or employees with allegations of fraud, waste, or abuse, should be advised to contact OIG directly, particularly if they want to protect their anonymity. The U.S. Department of Labor (DOL) and its divisions enforce laws that directly protect whistle blowers or have provisions to shield employees from retaliation, for reporting violations of the laws, refusing to engage in any action made unlawful by the laws, or participating in any proceedings under the laws.

Questions about or complaints alleging a violation of the nondiscrimination provisions of WIA section 188 may be directed or mailed to the Director, Civil Rights Center, U.S. Department of Labor, Room N4123, 200 Constitution Avenue NW, Washington DC 20210 for processing.

ARF-1356 **Consent Agenda Item 4- D**

Regular BOS Meeting

Meeting Date: 08/07/2012

Submitted For:	Kendall Rhyne, Chief Probation Officer	Submitted By:	Lisa King, Administrative Clerk Sr., Superior Court
Department:	Superior Court	Division:	Probation Department
Fiscal Year:	2013	Budgeted?:	Yes
Contract Dates Begin & End:	April 1, 2012 to March 31, 2013	Grant?:	No
Matching Requirement?:	No	Fund?:	Renewal

Information

Request/Subject

Amendment No. 4 to Contract No. A11PC00100 between the Bureau of Indian Affairs and Gila County, on behalf of the Gila County Juvenile Detention Center.

Background Information

The Gila County Juvenile Detention Center has contracted with the Bureau of Indian Affairs for several years. The detention center provides services to the Bureau of Indian Affairs by contracting bed space for tribal juveniles at a rate of $131.40 per day per juvenile from the jurisdiction of the Bureau of Indian Affairs - Office of Justice Services, Tribes, Truxton Canon Agency, Fort Apache Agency, Colorado River Agency, Salt River Agency, including within the exterior boundaries of the Indian Reservation(s) and Indian Allotments.

Evaluation

Amendment No. 4 to Contract No. A11PC00100 decreases the total contract amount by $17,000 changing the previous total contract amount from $100,400 to a grand total contract amount of $83.400. Each year at the approach of the fiscal year ending (September 30th), the federal government agencies review their budgets and try to spend the funds before the end of the fiscal year or risk having the budget reduced for the following year. The $17,000 reduction in this contract is a reflection of the fact that Gila County has not been requested to house any youth for the Bureau of Indian Affairs for several months so the Bureau is reallocating those funds for other purposes and thereby reducing the amount of the contract with Gila County.

Conclusion

Amendment No. 4 to Contract No. A11PC00100 allows the Gila County Juvenile Detention Center to continue providing services to the Bureau of Indian Affairs at a decreased total contract amount of $83,400.

Recommendation

The Gila County Probation Department recommends approval of Amendment No. 4 to Contract No. A11PC00100 with the Bureau of Indian Affairs.

Suggested Motion

Approval of Amendment No. 4 to Contract No. A11PC00100 between the Bureau of Indian Affairs and Gila County, on behalf of the Gila County Juvenile Detention Center, decreasing the total contract amount by $17,000 for a grand total contract amount of $83,400 for payment coverage of continuing detention services.

Attachments

Amendment No. 4 to Contract No. A11PC00100

Amendment No. 3 to Contract No. A11PC00100

Amendment No. 2 to Contract No. A11PC00100

Amendment No. 1 to Contract No. A11PC00100

BIA Contract No. A11PC00100

Legal Explanation

Amendment No. 0004

to

Contract No. A11PC00100

between

Bureau of Indian Affairs

and

Gila County on behalf of the

Gila County Juvenile Detention Center

AMENDMENT OF SOLICITATION/MODIFICATION OF CONTRACT

1. CONTRACT ID CODE

2. AMENDMENT/MODIFICATION NO.	3. EFFECTIVE DATE	4. REQUISITION/PURCHASE REQ. NO.	5. PROJECT NO. *(If applicable)*
0004	05/31/2012		

6. ISSUED BY CODE 00011
BIA - Western Regional Office
Division of Acquistion - Western,2600 N. Central Avenue, Suite 400
Phoenix, AZ 85004-3050

7. ADMINISTERED BY *(If other than Item 6)* CODE 00011
BIA - Western Regional Office
Division of Acquistion - Western,2600 N. Central Avenue, Suite 400
Phoenix, AZ 85004-3050

8. NAME AND ADDRESS OF CONTRACTOR *(No., street, county, State and Zip Code)*

GILA, COUNTY OF
1400 E ASH ST
GLOBE, AZ 85501-1093

CODE * FACILITY CODE

	9A. AMENDMENT OF SOLICITATION NO.
	9B. DATED *(SEE ITEM 11)*
(X)	10A. MODIFICATION OF CONTRACT/ORDER NO. A11PC00100
(X)	10B. DATED *(SEE ITEM 13)* 07/13/2011

11. THIS ITEM ONLY APPLIES TO AMENDMENTS OF SOLICITATIONS

☐ The above numbered solicitation is amended as set forth in Item 14. The hour and date specified for receipt of Offers ☐ is extended, ☐ is not extended.

Offers must acknowledge receipt of this amendment prior to the hour and date specified in the solicitation or as amended, by one of the following methods:

(a) By completing Items 8 and 15, and returning _____ copies of the amendment; (b) By acknowledging receipt of this amendment on each copy of the offer submitted; or (c) By separate letter or telegram which includes a reference to the solicitation and amendment numbers. FAILURE OF YOUR ACKNOWLEDGMENT *TO BE RECEIVED AT THE PLACE DESIGNATED FOR THE RECEIPT OF OFFERS PRIOR TO THE HOUR AND DATE SPECIFIED MAY RESULT* IN REJECTION OF YOUR OFFER. If by virtue of this amendment you desire to change an offer already submitted, such change may be made by telegram or letter, provided each telegram or letter makes reference to the solicitation and this amendment, and is received prior to the opening hour and date specified.

12. ACCOUNTING AND APPROPRIATION DATA *(If required)*

13. THIS ITEM ONLY APPLIES TO MODIFICATION OF CONTRACTS/ORDERS.
IT MODIFIES THE CONTRACT/ORDER NO. AS DESCRIBED IN ITEM 14.

CHECK ONE	
☐	A. THIS CHANGE ORDER IS ISSUED PURSUANT TO: (Specify authority) THE CHANGES SET FORTH IN ITEM 14 ARE MADE IN THE CONTRACT ORDER NO. IN ITEM 10A.
☑	B. THE ABOVE NUMBERED CONTRACT/ORDER IS MODIFIED TO REFLECT THE ADMINISTRATIVE CHANGES (such as changes in paying office, appropriation date, etc.) SET FORTH IN ITEM 14, PURSUANT TO THE AUTHORITY OF FAR 43.103(b).
☐	C. THIS SUPPLEMENTAL AGREEMENT IS ENTERED INTO PURSUANT TO AUTHORITY OF:
☐	D. OTHER *(Specify type of modification and authority)*

E. IMPORTANT: Contractor [X] is not, ☐ is required to sign this document and return _____ copies to the issuing office.

14. DESCRIPTION OF AMENDMENT/MODIFICATION *(Organized by UCF section headings, including solicitation/contract subject matter where feasible.)*

A. DECREASE the total contract amount by $17,000.00.

Except as provided herein, all terms and conditions of the document referenced in Item 9A or 10A, as heretofore changed, remains unchanged and in full force and effect.

15A. NAME AND TITLE OF SIGNER *(Type or print)*		16A. NAME AND TITLE OF CONTRACTING OFFICER *(Type or print)*	
Tommie C. Martin, Chairman		Gerald Knox, 1420-0660-1012	
15B. CONTRACTOR/OFFEROR	15C. DATE SIGNED	16B. United States of America	16C. DATE SIGNED
(Signature of person authorized to sign)		BY Gerald Knox *(Signature of Contracting Officer)*	05/31/2012

Line Item Number	Description	Delivery Date (Start date to End date)	Quantity	Unit of Issue	Unit Price	Total Cost
VENDOR CODE: 147259191						
0003	Option Year 1 - Contracted bed space for Tribal offenders *Change in Unit Price*	03/31/2013 (04/01/2012 to 03/31/2013)	0.00	YR	($17,000.00)	($17,000.00) OPTION PERIOD

Previous Total: $100,400.00
Modification Total: ($17,000.00)
Grand Total: $83,400.00
(Includes Discounts)

Contractor Point of Contact: Gila County Juvenile Detention (928) 425-6051
Note: Funding shall be incorporated by Modification upon availability of funds.

Shipping Addresses

Code	Detail	
0001	**Org:**	BIA - Office of Justice Services
	Addr:	District III 2600 N Central Avenue 8th Floor Phoenix AZ 85004
	Attn:	Jaki Baha-Alchesay, Law Enforcement Assistant
	Phone:	(602) 379-6958 ext.
	Fax:	(602) 379-6462 ext.

Invoice Addresses

Code	Detail	
0001	**Org:**	BIA-Albuquerque Accounting Operations
	Addr:	1001 Indian School Road NW, Suite 352 Albuquerque NM 87104
	Attn:	Cecilia Clark, Financial Manager
	Phone:	(505) 563-3151 ext.
	Fax:	(505) 563-3038 ext.

Attest:

_____
Marian Sheppard, Chief Deputy Clerk

Approved as to form:

_____
Bryan B. Chambers,
Chief Deputy County Attorney

Amendment No. 0003

to

Contract No. A11PC00100

between

Bureau of Indian Affairs

and

Gila County on behalf of the

Gila County Juvenile Detention Center

AMENDMENT OF SOLICITATION/MODIFICATION OF CONTRACT

1. CONTRACT ID CODE	Page 1 of 4

2. AMENDMENT/MODIFICATION NO.	3. EFFECTIVE DATE	4. REQUISITION/PURCHASE REQ. NO.	5. PROJECT NO. *(If applicable)*
0003	03/14/2012		

6. ISSUED BY CODE 00011
BIA - Western Regional Office
Division of Acquistion - Western,2600 N. Central Avenue, Suite 400
Phoenix, AZ 85004-3050

7. ADMINISTERED BY *(If other than Item 6)* CODE 00011
BIA - Western Regional Office
Division of Acquistion - Western,2600 N. Central Avenue, Suite 400
Phoenix, AZ 85004-3050

8. NAME AND ADDRESS OF CONTRACTOR *(No., street, county, State and Zip Code)*

GILA, COUNTY OF
1400 E ASH ST
GLOBE, AZ 85501-1093

CODE * FACILITY CODE

	9A. AMENDMENT OF SOLICITATION NO.
	9B. DATED *(SEE ITEM 11)*
(X)	10A. MODIFICATION OF CONTRACT/ORDER NO. A11PC00100
(X)	10B. DATED *(SEE ITEM 13)* 07/13/2011

11. THIS ITEM ONLY APPLIES TO AMENDMENTS OF SOLICITATIONS

☐ The above numbered solicitation is amended as set forth in Item 14. The hour and date specified for receipt of Offers ☐ is extended, ☐ is not extended.

Offers must acknowledge receipt of this amendment prior to the hour and date specified in the solicitation or as amended, by one of the following methods:

(a) By completing Items 8 and 15, and returning _____ copies of the amendment; (b) By acknowledging receipt of this amendment on each copy of the offer submitted; or (c) By separate letter or telegram which includes a reference to the solicitation and amendment numbers. FAILURE OF YOUR ACKNOWLEDGMENT TO BE RECEIVED AT THE PLACE DESIGNATED FOR THE RECEIPT OF OFFERS PRIOR TO THE HOUR AND DATE SPECIFIED MAY RESULT IN REJECTION OF YOUR OFFER. If by virtue of this amendment you desire to change an offer already submitted, such change may be made by telegram or letter, provided each telegram or letter makes reference to the solicitation and this amendment, and is received prior to the opening hour and date specified.

12. ACCOUNTING AND APPROPRIATION DATA *(If required)*

2012 - 2013 - - K0L400 - - 258A - - J3130 - - - - - - - - - $25,000.00

13. THIS ITEM ONLY APPLIES TO MODIFICATION OF CONTRACTS/ORDERS.
IT MODIFIES THE CONTRACT/ORDER NO. AS DESCRIBED IN ITEM 14.

CHECK ONE	
☐	A. THIS CHANGE ORDER IS ISSUED PURSUANT TO: (Specify authority) THE CHANGES SET FORTH IN ITEM 14 ARE MADE IN THE CONTRACT ORDER NO. IN ITEM 10A.
☐	B. THE ABOVE NUMBERED CONTRACT/ORDER IS MODIFIED TO REFLECT THE ADMINISTRATIVE CHANGES (such as changes in paying office, appropriation date, etc.) SET FORTH IN ITEM 14, PURSUANT TO THE AUTHORITY OF FAR 43.103(b).
☐	C. THIS SUPPLEMENTAL AGREEMENT IS ENTERED INTO PURSUANT TO AUTHORITY OF:
☑	D. OTHER *(Specify type of modification and authority)* FAR Clause No. 52.217-09 Option to Extend the Term of the Contract

E. IMPORTANT: Contractor [X] is not, [ ] is required to sign this document and return _____ copies to the issuing office.

14. DESCRIPTION OF AMENDMENT/MODIFICATION *(Organized by UCF section headings, including solicitation/contract subject matter where feasible.)*

A. EXTEND the period of performance from March 31, 2012 to March 31, 2013, Option Year 1.

B. INCREASE the total contract amount by $25,000.00.

Except as provided herein, all terms and conditions of the document referenced in Item 9A or 10A, as heretofore changed, remains unchanged and in full force and effect.

15A. NAME AND TITLE OF SIGNER *(Type or print)*		16A. NAME AND TITLE OF CONTRACTING OFFICER *(Type or print)*	
Tommie C. Martin, Chairman		Gerald Knox, 1420-0660-1012	
15B. CONTRACTOR/OFFEROR	15C. DATE SIGNED	16B. United States of America	16C. DATE SIGNED
(Signature of person authorized to sign)		BY Gerald Knox *(Signature of Contracting Officer)*	03/14/2012

Total Funding: $100,400.00

FYs	Fund	Budget Org	Sub	Object Class	Sub	Program	Cost Org	Sub	Proj/Job No.	Sub	Reporting Category

Division **Closed FYs** **Cancelled Fund**

Line Item Number	Description	Delivery Date (Start date to End date)	Quantity	Unit of Issue	Unit Price	Total Cost
VENDOR CODE: 147259191						
0003	Option Year 1 - Contracted bed space for Tribal offenders Change in Unit Price	03/31/2013 (04/01/2012 to 03/31/2013)	0.00	YR	$25,000.00	$25,000.00 OPTION PERIOD

Previous Total: $75,400.00
Modification Total: $25,000.00
Grand Total: $100,400.00
(Includes Discounts)

Contractor Point of Contact: Gila County Juvenile Detention (928) 425-6051
Note: Funding shall be incorporated by Modification upon availability of funds.

Funding Strip Code	Change in Funded Amount
2012 - 2013 - - K0L400 - - 258A - - J3130 - - - - - - - - -	$25,000.00

Shipping Addresses

Code	Detail	
0001	**Org:**	BIA - Office of Justice Services
	Addr:	District III 2600 N Central Avenue 8th Floor Phoenix AZ 85004
	Attn:	Jaki Baha-Alchesay, Law Enforcement Assistant
	Phone:	(602) 379-6958 ext.
	Fax:	(602) 379-6462 ext.

Invoice Addresses

Code	Detail	
0001	**Org:**	BIA-Albuquerque Accounting Operations
	Addr:	1001 Indian School Road NW, Suite 352 Albuquerque NM 87104
	Attn:	Cecilia Clark, Financial Manager
	Phone:	(505) 563-3151 ext.
	Fax:	(505) 563-3038 ext.

Attest:

_____

Marian Sheppard, Chief Deputy Clerk

Approved as to form:

_____

Bryan B. Chambers,
Chief Deputy County Attorney

Amendment No. 0002

to

Contract No. A11PC00100

between

Bureau of Indian Affairs

and

Gila County on behalf of the

Gila County Juvenile Detention Center

AMENDMENT OF SOLICITATION/MODIFICATION OF CONTRACT

2. AMENDMENT/MODIFICATION NO.	3. EFFECTIVE DATE	4. REQUISITION/PURCHASE REQ. NO.	5. PROJECT NO. (If applicable)
0002	10/21/2011		

6. ISSUED BY CODE KH0230
BIA - OCFO-Western
Division of Acquisition,2600 N. Central Avenue, Suite 450
Phoenix, AZ 85004

7. ADMINISTERED BY (If other than Item 6) CODE KH0230
BIA - OCFO-Western
Division of Acquisition,2600 N. Central Avenue, Suite 450
Phoenix, AZ 85004

8. NAME AND ADDRESS OF CONTRACTOR (No., street, county, State and Zip Code)

GILA, COUNTY OF
1400 E ASH ST
GLOBE, AZ 85501-1093

CODE * FACILITY CODE

	9A. AMENDMENT OF SOLICITATION NO.
	9B. DATED (SEE ITEM 11)
(X)	10A. MODIFICATION OF CONTRACT/ORDER NO. A11PC00100
(X)	10B. DATED (SEE ITEM 13) 07/13/2011

11. THIS ITEM ONLY APPLIES TO AMENDMENTS OF SOLICITATIONS

☐ The above numbered solicitation is amended as set forth in Item 14. The hour and date specified for receipt of Offers ☐ is extended, ☐ is not extended.

Offers must acknowledge receipt of this amendment prior to the hour and date specified in the solicitation or as amended, by one of the following methods:

(a) By completing Items 8 and 15, and returning _____ copies of the amendment; (b) By acknowledging receipt of this amendment on each copy of the offer submitted; or (c) By separate letter or telegram which includes a reference to the solicitation and amendment numbers. FAILURE OF YOUR ACKNOWLEDGMENT TO BE RECEIVED AT THE PLACE DESIGNATED FOR THE RECEIPT OF OFFERS PRIOR TO THE HOUR AND DATE SPECIFIED MAY RESULT IN REJECTION OF YOUR OFFER. If by virtue of this amendment you desire to change an offer already submitted, such change may be made by telegram or letter, provided each telegram or letter makes reference to the solicitation and this amendment, and is received prior to the opening hour and date specified.

12. ACCOUNTING AND APPROPRIATION DATA (If required)

13. THIS ITEM ONLY APPLIES TO MODIFICATION OF CONTRACTS/ORDERS.
IT MODIFIES THE CONTRACT/ORDER NO. AS DESCRIBED IN ITEM 14.

CHECK ONE	
☐	A. THIS CHANGE ORDER IS ISSUED PURSUANT TO: (Specify authority) THE CHANGES SET FORTH IN ITEM 14 ARE MADE IN THE CONTRACT ORDER NO. IN ITEM 10A.
☑	B. THE ABOVE NUMBERED CONTRACT/ORDER IS MODIFIED TO REFLECT THE ADMINISTRATIVE CHANGES (such as changes in paying office, appropriation date, etc.) SET FORTH IN ITEM 14, PURSUANT TO THE AUTHORITY OF FAR 43.103(b).
☐	C. THIS SUPPLEMENTAL AGREEMENT IS ENTERED INTO PURSUANT TO AUTHORITY OF:
☐	D. OTHER (Specify type of modification and authority)

E. IMPORTANT: Contractor [X] is not, [ ] is required to sign this document and return _____ copies to the issuing office.

14. DESCRIPTION OF AMENDMENT/MODIFICATION (Organized by UCF section headings, including solicitation/contract subject matter where feasible.)

A. INCREASE the total contract amount by $12,300.00.

Except as provided herein, all terms and conditions of the document referenced in Item 9A or 10A, as heretofore changed, remains unchanged and in full force and effect.

15A. NAME AND TITLE OF SIGNER (Type or print)		16A. NAME AND TITLE OF CONTRACTING OFFICER (Type or print)	
Tommie C. Martin, Chairman		Gerald Knox, 1420-0660-1012	
15B. CONTRACTOR/OFFEROR Tommie C. Martin (Signature of person authorized to sign)	15C. DATE SIGNED 11/15/11	16B. United States of America BY Gerald Knox (Signature of Contracting Officer)	16C. DATE SIGNED 10/21/2011

Line Item Number	Description	Delivery Date (Start date to End date)	Quantity	Unit of Issue	Unit Price	Total Cost
VENDOR CODE: 147259191						
0001	Contracted bed space for juvenile offenders at the negotiated rate of $131.40 per day per	03/31/2012 (04/01/2011 to 03/31/2012)	0.00	YR	$12,300.00	$12,300.00

Change in Unit Price

juvenile for Truxton Canon Agency, Fort Apache Agency, Colorado River Agency and Salt River Agency, including within the exterior boundaries of the Indian Reservation(s) and Indian Allotments.

The Contractor will assist BIA/OJS by providing housing within its juvenile detention facility for juveniles who have been arrested and awaiting transport, or awaiting awaiting adjudication, servicing sentences, and /or awaiting release from custody as a result of having been arrested or having been convicted of Tribal violations occurring in Indian Country within the BIA Truxton Canon Agency, Fort Apache Agency, Colorado River Agency and Salt River Agency, within Agency's jurisdiction.

Previous Total: $63,100.00
Modification Total: $12,300.00
Grand Total: $75,400.00
(Includes Discounts)

Contractor Point of Contact: Gila County Juvenile Detention (928) 425-6051
Note: Funding shall be incorporated by Modification upon availability of funds.

Shipping Addresses

Code	Detail	
0001	Org:	BIA - Office of Justice Services
	Addr:	District III 2600 N Central Avenue 8th Floor Phoenix AZ 85004
	Attn:	Jaki Baha-Alchesay, Law Enforcement Assistant
	Phone:	(602) 379-6958 ext.
	Fax:	(602) 379-6462 ext.

Invoice Addresses

Code	Detail	
0001	Org:	BIA-Albuquerque Accounting Operations
	Addr:	1001 Indian School Road NW, Suite 352 Albuquerque NM 87104
	Attn:	Cecilia Clark, Financial Manager
	Phone:	(505) 563-3151 ext.
	Fax:	(505) 563-3038 ext.

Attest:

Marian Sheppard, Chief Deputy Clerk

Approved as to form:

Bryan B. Chambers,
Chief Deputy County Attorney

Amendment No. 0001

to

Contract No. A11PC00100

between

Bureau of Indian Affairs

and

Gila County on behalf of the

Gila County Juvenile Detention Center

2. AMENDMENT/MODIFICATION NO.	3. EFFECTIVE DATE	4. REQUISITION/PURCHASE REQ. NO.	5. PROJECT NO. *(If applicable)*
0001	07/27/2011		

6. ISSUED BY CODE KH0230
BIA - OCFO-Western
Division of Acquisition,2600 N. Central Avenue, Suite 450
Phoenix, AZ 85004

7. ADMINISTERED BY *(If other than Item 6)* CODE KH0230
BIA - OCFO-Western
Division of Acquisition,2600 N. Central Avenue, Suite 450
Phoenix, AZ 85004

8. NAME AND ADDRESS OF CONTRACTOR *(No., street, county, State and Zip Code)*

GILA, COUNTY OF
1400 E ASH ST
GLOBE, AZ 85501-1093

CODE * FACILITY CODE

	9A. AMENDMENT OF SOLICITATION NO.
	9B. DATED *(SEE ITEM 11)*
(X)	10A. MODIFICATION OF CONTRACT/ORDER NO. A11PC00100
(X)	10B. DATED *(SEE ITEM 13)* 07/13/2011

11. THIS ITEM ONLY APPLIES TO AMENDMENTS OF SOLICITATIONS

☐ The above numbered solicitation is amended as set forth in Item 14. The hour and date specified for receipt of Offers ☐ is extended, ☐ is not extended.

Offers must acknowledge receipt of this amendment prior to the hour and date specified in the solicitation or as amended, by one of the following methods:

(a) By completing Items 8 and 15, and returning _____ copies of the amendment; (b) By acknowledging receipt of this amendment on each copy of the offer submitted; or (c) By separate letter or telegram which includes a reference to the solicitation and amendment numbers. FAILURE OF YOUR ACKNOWLEDGMENT TO BE RECEIVED AT THE PLACE DESIGNATED FOR THE RECEIPT OF OFFERS PRIOR TO THE HOUR AND DATE SPECIFIED MAY RESULT IN REJECTION OF YOUR OFFER. If by virtue of this amendment you desire to change an offer already submitted, such change may be made by telegram or letter, provided each telegram or letter makes reference to the solicitation and this amendment, and is received prior to the opening hour and date specified.

12. ACCOUNTING AND APPROPRIATION DATA *(If required)*

2011 - 2012 - - K0L400 - - 258A - - J3130 - - - - - - - - - $63,000.00

13. THIS ITEM ONLY APPLIES TO MODIFICATION OF CONTRACTS/ORDERS.
IT MODIFIES THE CONTRACT/ORDER NO. AS DESCRIBED IN ITEM 14.

CHECK ONE	
☐	A. THIS CHANGE ORDER IS ISSUED PURSUANT TO: (Specify authority) THE CHANGES SET FORTH IN ITEM 14 ARE MADE IN THE CONTRACT ORDER NO. IN ITEM 10A.
☑	B. THE ABOVE NUMBERED CONTRACT/ORDER IS MODIFIED TO REFLECT THE ADMINISTRATIVE CHANGES (such as changes in paying office, appropriation date, etc.) SET FORTH IN ITEM 14, PURSUANT TO THE AUTHORITY OF FAR 43.103(b).
☐	C. THIS SUPPLEMENTAL AGREEMENT IS ENTERED INTO PURSUANT TO AUTHORITY OF:
☐	D. OTHER *(Specify type of modification and authority)*

E. IMPORTANT: Contractor [X] is not, [ ] is required to sign this document and return _____ copies to the issuing office.

14. DESCRIPTION OF AMENDMENT/MODIFICATION *(Organized by UCF section headings, including solicitation/contract subject matter where feasible.)*

A. INCREASE the total contract amount by $63,000.00.

Except as provided herein, all terms and conditions of the document referenced in Item 9A or 10A, as heretofore changed, remains unchanged and in full force and effect.

15A. NAME AND TITLE OF SIGNER *(Type or print)*		16A. NAME AND TITLE OF CONTRACTING OFFICER *(Type or print)*	
Tommie C. Martin, Chairman		Gerald Knox, 1420-0660-1012	
15B. CONTRACTOR/OFFEROR *(Signature of person authorized to sign)*	15C. DATE SIGNED 11/15/11	16B. United States of America BY Gerald Knox *(Signature of Contracting Officer)*	16C. DATE SIGNED 07/27/2011

Total Funding: $63,100.00

FYs	Fund	Budget Org	Sub	Object Class	Sub	Program	Cost Org	Sub	Proj/Job No.	Sub	Reporting Category

Division **Closed FYs** **Cancelled Fund**

Line Item Number	Description	Delivery Date (Start date to End date)	Quantity	Unit of Issue	Unit Price	Total Cost
VENDOR CODE: 147259191						
0001	Contracted bed space for juvenile offenders at the negotiated rate of $131.40 per day per	03/31/2012 (04/01/2011 to 03/31/2012)	0.00	YR	$63,000.00	$63,000.00

Change in Unit Price
juvenile for Truxton Canon Agency, Fort Apache Agency, Colorado River Agency and Salt River Agency, including within the exterior boundaries of the Indian Reservation(s) and Indian Allotments.

The Contractor will assist BIA/OJS by providing housing within its juvenile detention facility for juveniles who have been arrested and awaiting transport, or awaiting awaiting adjudication, servicing sentences, and /or awaiting release from custody as a result of having been arrested or having been convicted of Tribal violations occurring in Indian Country within the BIA Truxton Canon Agency, Fort Apache Agency, Colorado River Agency and Salt River Agency, within Agency's jurisdiction.

Previous Total: $100.00
Modification Total: $63,000.00
Grand Total: $63,100.00
(Includes Discounts)

Contractor Point of Contact: Gila County Juvenile Detention (928) 425-6051
Note: Funding shall be incorporated by Modification upon availability of funds.

Funding Strip Code	Change in Funded Amount
2011 - 2012 - - K0L400 - - 258A - - J3130 - - - - - - - - -	$63,000.00

Shipping Addresses

Code	Detail
0001	**Org:** BIA - Office of Justice Services **Addr:** District III 2600 N Central Avenue 8th Floor Phoenix AZ 85004 **Attn:** Jaki Baha-Alchesay, Law Enforcement Assistant **Phone:** (602) 379-6958 ext. **Fax:** (602) 379-6462 ext.

Invoice Addresses

Code	Detail
0001	**Org:** BIA-Albuquerque Accounting Operations **Addr:** 1001 Indian School Road NW, Suite 352 Albuquerque NM 87104 **Attn:** Cecilia Clark, Financial Manager **Phone:** (505) 563-3151 ext. **Fax:** (505) 563-3038 ext.

Attest:

Marian Sheppard, Chief Deputy Clerk

Approved as to form:

Bryan B. Chambers,
Chief Deputy County Attorney

AWARD/CONTRACT

1. THIS CONTRACT IS A RATED ORDER UNDER DPAS (15 CFR 700) — Rating

2. CONTRACT (Proc. inst. ident.) NO.
A11PC00100

3. EFFECTIVE DATE
04/01/2011

4. REQUISITION/PURCHASE REQUEST PROJECT NO.

5. ISSUED BY CODE KH0230
BIA - OCFO-Western
Division of Acquisition
2600 N. Central Avenue, Suite 450

Phoenix, AZ 85004-

6. ADMINISTERED BY (If other than Item 5) CODE KH0230
BIA - OCFO-Western
Division of Acquisition
2600 N. Central Avenue, Suite 450

Phoenix, AZ 85004-

7. NAME AND ADDRESS OF CONTRACTOR (No., street, city, county, State and ZIP Code)
GILA, COUNTY OF

1400 E ASH ST
GLOBE, AZ 85501-1093

CODE * FACILITY CODE

8. DELIVERY ☐ FOB Origin ☐ Other (See below)

9. DISCOUNT FOR PROMPT PAYMENT

10. SUBMIT INVOICES (4 Copies unless other-wise specified) TO THE ADDRESS SHOWN IN: ITEM 12

11. SHIP TO/MARK FOR CODE H0L300
Jaki Baha-Alchesay
BIA - Office of Justice Services
District III
2600 N Central Avenue 8th Floor

Phoenix, AZ 85004-

12. PAYMENT WILL BE MADE BY CODE ABQ
BIA-Albuquerque Accounting Operations
1001 Indian School Road NW, Suite 352

Albuquerque, NM 87104-2303

13. AUTHORITY FOR USING OTHER THAN FULL AND OPEN COMPETITION:
☐ 10 U.S.C. 2304(c) ( ) ☒ 41 U.S.C. 253(c) (1)

14. ACCOUNTING AND APPROPRIATION DATA
2010 - 2011 - - K0L400 - - 258A - - J3130 - - - - - - - - - -

15A. ITEM NO.	15B. SUPPLIES/SERVICES	15C. QUANTITY	15D. UNIT	15E. UNIT PRICE	15F. AMOUNT
	SEE LINE ITEM DETAIL				

15G. TOTAL AMOUNT OF CONTRACT $ 100.00

16. TABLE OF CONTENTS

(X)	SEC	DESCRIPTION	PAGE(S)	(X)	SEC	DESCRIPTION	PAGE(S)
		PART I - THE SCHEDULE				PART II - CONTRACT CLAUSES	
	A	SOLICITATION CONTRACT FORM		X	I	CONTRACT CLAUSES	
	B	SUPPLIES OR SERVICES AND PRICES/COSTS				PART III - LIST OF DOCUMENTS, EXHIBITS AND OTHER ATTACH.	
X	C	DESCRIPTION/SPECS/WORK STATEMENT		X	J	LIST OF ATTACHMENTS	
	D	PACKAGING AND MARKING				PART IV - REPRESENTATIONS AND INSTRUCTIONS	
	E	INSPECTION AND ACCEPTANCE			K	REPRESENTATIONS, CERTIFICATIONS, AND OTHER STATEMENTS OF OFFERORS	
X	F	DELIVERIES AND PERFORMANCE					
X	G	CONTRACT ADMINISTRATION DATA			L	INSTRS., CONDS., AND NOTICES TO OFFERORS	
	H	SPECIAL CONTRACT REQUIREMENTS			M	EVALUATION FACTORS FOR AWARD	

CONTRACTING OFFICER WILL COMPLETE ITEM 17 OR 18 AS APPLICABLE

17. ☑ CONTRACTOR'S NEGOTIATED AGREEMENT (Contractor is required to sign this document and return 1 copies to issuing office) Contractor agrees to furnish and deliver all items or perform all the services set forth or otherwise identified above and on any continuation sheets for the consideration stated herein. The rights and obligations of the parties to this contract shall be subject to and governed by the following documents: (a) this award/contract, (b) the solicitation, if any, and (c) such provisions, representations, certifications, and specifications, as attached or incorporated by reference herein.

(Attachments are listed herein.)

18. ☐ AWARD (Contractor is not required to sign this document.) Your offer on Solicitation Number _____ including the additions or changes made by you which additions or changes are set forth in full above, is hereby accepted as to the items listed above and on any continuation sheets. This award consummates the contract which consists of the following documents: (a) the Government's solicitation and your offer, and (b) this award/contract. No further contractual document is necessary.

19A. NAME AND TITLE OF SIGNER (Type or print)
Michael A. Pastor, Chairman

20A. NAME OF CONTRACTING OFFICER
Gerald Knox, 1420-0660-1012

19B. NAME OF CONTRACTOR
By Michael Pastor
(Signature of person authorized to sign)

19C. DATE SIGNED
6/28/11

20B. UNITED STATES OF AMERICA
By Gerald Knox
(Signature of Contracting Officer)

20C. DATE SIGNED
05/06/11

Attest:

Marian Sheppard, Chief Deputy Clerk

Approved as to form:

Bryan B. Chambers,
Chief Deputy County Attorney

TABLE OF CONTENTS

SECTION C -- Descriptions and Specifications 7
C.1 Statement of Work 7
SECTION F -- Deliveries or Performance 12
F.1 Stop-Work Order 12
SECTION G -- Contract Administration Data 13
G.1 Invoice and Payment 13
SECTION I -- Contract Clauses 14
I.1 Contract Terms and Conditions--Commercial Items 14
I.2 Contract Terms and Conditions Required to Implement Statutes or Executive Orders--Commercial Items 17
I.3 Option to Extend Services 20
I.4 Option to Extend the Term of the Contract 20
I.5 Availability of Funds 20
I.6 Availability of Funds for the Next Fiscal Year 20
SECTION J -- List of Documents, Exhibits and Other Attachments 22
J.1 ALL DOI NATIONWIDE - PROHIBITION ON TEXTING WHILE DRIVING 22
J.2 Medical Voucher - Attachment 1 23
J.3 SERVICE CONTRACT ACT - WAGE DETERMINATIONS 24

SECTION C -- DESCRIPTIONS AND SPECIFICATIONS

C.1 STATEMENT OF WORK

Statement of Work
Gila County Juvenile Facility

SECTION 1 - DEFINITIONS

1.1. General Definitions

1.1.1. "BIA-OJS" or "Agency" means the United States Department of the Interior, Bureau of Indian Affairs (BIA), Office of Justice Services.

1.1.2. "District" means the region(s) of BIA-OJS as designated in this contract.

1.1.3. "County" means the County of Gila, in the State of Arizona, and the Gila County Juvenile Detention Center, Globe, Arizona.

1.1.4. "Contractor" means the facility, tribe or local government providing the service.

1.1.5. "Agency's jurisdiction" means the jurisdiction of the BIA-OJS, Tribes, Truxton Canon Agency, Fort Apache Agency, Colorado River Agency, Salt River Agency, including within the exterior boundaries of the Indian Reservation(s) and Indian Allotments.

1.1.6. "Juvenile" means any person who has not attained the age of 18.

1.1.7. "BIA-OJS Supervisory Corrections Specialist" means the Agency's District III Supervisory Correctional Specialist (SCS)

1.1.8. "Indian Country" has the same meaning as that term is defined in Section 1151 of Title 18, United States Code.

1.1.9. "Indian reservation or reservation" means within the exterior boundaries of the Indian Reservation(s) and Indian Allotment(s) under the Fort Apache Agency, Truxton Canon Agency, Colorado River Agency, Salt River Agency.

1.1.10. "Tribal prisoner or tribal inmate" means a juvenile arrested under authority of the Tribal Codes(s) of the respective tribes under the jurisdiction of the Fort Apache Agency, Truxton Canon Agency, Colorado River Agency, Salt River Agency, or convicted by a Tribal Court with personal jurisdiction over the offender and subject matter jurisdiction over the offense for a violation of the Tribal code, within the Agency's jurisdiction.

1.1.11. "Delinquent child" means a person under (18) years of age, who has committed an act that violates the Law and Order Code and/or or would be a crime if committed by an adult, or is verified fugitive from another jurisdiction. [As amended by Ordinance DOI 3(98)] or detained or convicted by a Tribal Court with personal jurisdiction over the child/offender and subject matter jurisdiction over the Agency's jurisdiction.

1.1.12. "Tribal violation" means a violation which offends the criminal laws of the Tribal Court or Code of Federal Regulations Court having jurisdiction of the arresting agency. This provision will not permit the confinement of juvenile offenders whose only charge or conviction is for a status offense as defined by the Office of Juvenile Justice and Delinquency Act of 1974 and subsequent revisions.

SECTION 2 - GENERAL INFORMATION

2.1. Scope of Work

The contractor shall provide safe and secure detention/correctional services in accordance with the specific tasks as outlined in Section 3.

2.1.1. Purpose. The (Gila County Juvenile Detention Center) will actively assist the BIA-OJS by providing housing within its detention facility, for adult individuals who have been arrested and awaiting transport, or awaiting adjudication, serving sentences and/or awaiting release from custody as a result of having been arrested, or having been convicted of tribal violations occurring in Indian Country within the Truxton Canon Agency jurisdiction.

2.2 Contractor Personnel

2.2.1 The contractor shall provide or designate a qualified and capable on-site contract manager who shall be responsible for the performance of the work.

2.2.1.1. The contract manager or alternate shall have full authority to act for the contractor on all contract matters relating to the daily operation of this contract.

2.2.1.2. The contract manager or alternate shall be available during normal working hours to discuss issues relating to the contract with authorized government officials specific to this contract.

2.2.2. Contractor Employees. The contractor shall ensure contract employees are qualified and trained in accordance with contractor facility standards.

2.3 Quality Control

2.3.1. The contractor shall make available any reports of inspection and/or sanitation reports.

2.4 Quality Assurance

2.4.1. The government reserves the right to visit the facility to ensure adequate services are being provided.

2.5 Cost for services.

2.5.1 The cost shall be $131.40 per prisoner day.

2.5.1.1 For the purpose of computing daily cost a "day" shall begin at 12:01 a.m. and end the following midnight.

2.5.1.2. Any part of a day shall be paid on a pro-rated basis (daily).

2.6 Contract Information

2.6.1 Contractor: Gila County Juvenile Detention Center
1425 E South Street
Globe, AZ 85501
(928) 425-6051
Fax (928) 425-3952

2.6.2 Agency: Vincente M. Anchondo, SCS
2600 N Central Ave
Phoenix, Arizona 85004
(602) 379-6958 ext 1809
(602) 541-7166 (cellular)

2.7 Period of Performance.

2.7.1. Shall be for the period beginning April 1, 2011 to March 31, 2016.

Section 3 - Specific Tasks

3.1. The Gila County Juvenile Detention Center will accept juvenile offenders who have committed violations of tribal criminal law and who are placed there by the District III SCS or their authorized agents.

3.1.1. The Gila County Juvenile Detention Center agrees to house juvenile inmates and provide the necessary food, shelter and supervision services. Any Bureau or Tribal inmate lodged in the Gila County Juvenile Detention Center facility shall be subject to the same rules and regulations as any other person lodged within the facility.

3.1.2. Any Bureau or Tribal arrestee/prisoner awaiting adjudication or awaiting release who has not served his/her full sentence shall not be released except upon written orders from the appropriate tribal court.

3.1.3. The Gila County Juvenile Detention Center will not accept any person that has attained the age of 18 years for lodging within the facility. Gila County Juvenile Detention Center will accept female and male inmates.

3.1.4. The Agency making the arrest shall be responsible for transporting tribal arrestees and prisoners to the Gila County Juvenile Detention Center, Globe, Arizona, while awaiting adjudication, serving sentence and/or while awaiting release from custody.

3.1.5. Any unusual incident which affects any Bureau or tribal juvenile inmate held under this contract/purchase order will require the Gila County Juvenile Detention Center to contact the SCS within twenty-four (24) hours of its' occurrence, unless the incident resulted in serious injury or medical condition, death, escape, change of location of the tribal arrestee or prisoner, in such instances, the Gila County Juvenile Detention Center will notify the SCS, District III, immediately.

3.2. Medical needs of prisoners.

3.2.1. Whenever feasible and practicable, emergency medical, mental or dental needs of Bureau or Tribal juvenile inmates, who are enrolled members of a Federally-recognized Tribe, shall be provided by the Indian Health Service or a tribal health care facility/provider.

3.2.2. The Gila County Juvenile Detention Center shall promptly notify the BIA-OJS, District III SCS, or designee of such needs to afford the Agency the opportunity to arrange for the treatment and the transport to treatment or to otherwise advise the Gila County Juvenile Detention Center on action to be taken.

3.2.3. In case of extreme emergency where it is not feasible or practicable to seek BIA-OJS advice in advance, the Gila County Juvenile Detention Center may obtain such care for prisoners at local, Federal, or state facilities as emergency needs dictate.

3.2.3.1 In such instances the care provider will be advised by the Gila County Juvenile Detention Center to contact the nearest Indian Health Service facility for further instructions and for claims advice within 72 hours of first furnishing care or treatment.

3.2.3.2. The Gila County Juvenile Detention Center shall promptly notify the SCS, District III of actions taken when such emergency circumstances occur.

3.2.4. The following are health care facilities closest to the Gila County Juvenile Detention Center:

Cobre Valley Community Hospital
5880 S Hospital Drive
Globe, Arizona 85501
(928) 425-3261

3.2.4.1. In case of extreme emergency only, the following Health Care Facility will be used:

Cobre Valley Community Hospital
5880 S Hospital Drive
Globe, Arizona 85501
(928) 425-3261

3.2.5. In instances where Indian Health Service rejects claims for care provided by a non-Indian facility and the costs cannot be recovered by the provider under other federal or state programs, the Gila County Juvenile Detention Center will be billed by the provider.

3.2.6. BIA-OJS Division of Corrections will only reimburse the Gila County Juvenile Detention Center for medical services if the treatment has been approved by BIA-OJS. BIA-OJS will only reimburse the contractor and not the actual provider of treatment, for authorized emergency medical, mental and dental care and medications.

3.2.7. A medical voucher will be prepared listing alphabetically the health care providers and total amount due to each vendor, the full inmate name, services provided, date of service, and total amount billed for each inmate. Original invoices from the health care provider must be attached to the medical voucher. Invoices must contain name and address of vendor, full inmate name, itemized description of services provided, date of service, cost of inmate's treatment, and total amount to be reimbursed by BIA-OJS. A statement certifying the accuracy of the medical voucher shall be placed on the bottom of each medical voucher by the Gila County Juvenile Detention Center facility administrator.

3.2.8. BIA-OJS will be responsible for providing a medical release of information form signed by the juvenile offender's parent/guardian or custodian for the purpose of obtaining the medical records.

3.2.8.1. The Gila County Juvenile Detention Center will be responsible for providing medical screening of the inmate at the time of booking and the BIA-OJS Police Officer, from their respective Agency, shall provide information regarding any current medical concerns at the time of transportation and booking.

3.2.8.2. BIA OJS or Tribal Police Officer shall be responsible to obtain medical clearance for any known or obvious medical needs prior to incarceration at Gila County Juvenile Detention Center.

Section 4 - Negative Declaration

4.1. This Statement of Work (SOW) does not reflect, in this or any other context any party's position with respect to the jurisdictional authority of another. Nothing in this SOW, or in any conduct undertaken pursuant to this SOW, shall be construed as enlarging or diminishing the jurisdictional authority of either party except to the extent necessary to implement and effectuate the provisions of this SOW. Nothing herein affects to any extent, statutory or tribal code provisions regarding the sovereign immunity of the parties. Neither this SOW nor the activities of the parties pursuant to this SOW shall be used to affect the legal or equitable position of any party in any pending or future litigation. Nothing in this Statement of Work shall be construed to impact or impair the extradition authority and processes of the Parties.

4.1.2. Nothing in this SOW shall be construed as waiving the sovereign immunity of Gila County Juvenile Detention Center or their employees from suit in State, Tribal or Federal court. Liability for suit in State, Tribal or Federal court is determined by existing State, Tribal and Federal law and is not altered by this Agreement. Nothing in this Agreement waives the sovereign immunity of the United States or BIA Police Officers, except as provided for in the Federal Tort Claims Act, 28 U.S.C. §§ 2401, 2671-2680.

Section 5 - Board Bill

5.1. The Gila County Juvenile Detention Center will submit, by the tenth day of the month, a board bill for the previous month's costs of housing BIA-OJS inmates. The board bill will contain the name and address of the Contractor, the contract or purchase order number, date that the board bill is prepared, name of each inmate housed for BIA-OJS, in conjunction with the number of days or portion of days each inmate was physically housed by the Gila County Juvenile Detention Center, daily inmate rate, and the total amount to be paid by BIA-OJS Division of Corrections. Any discrepancies shall be justified in writing by the Gila County Juvenile Detention Center.

5.1.1. The monthly board bill is to be mailed to:

Bureau of Indian Affairs
OJS-Accounting Operations
Attn: Cecilia Clark
1001 Indian School Road, NW, Suite 352
Albuquerque, NM 87104

Section 6 - Right to Refuse Placement

6.1. Notwithstanding any of the above provisions of this SOW, should a limit be set by statute, judicial, or administrative decision, or otherwise, on the number of prisoners, which the Gila County Juvenile Detention Center may lawfully lodge in its facility at any one time, then Gila County Juvenile Detention Center may refuse to lodge any BIA-OJS prisoners if the number of prisoners in the Gila County Juvenile Detention Center at that time has reached 75 % of the maximum capacity allowable by law.

Section 7 - Hold Harmless

7.1. The Gila County Juvenile Detention Center agrees to hold harmless the BIA-OJS from:

7.1.1. Violation of constitutional rights arising from the detention of persons in the Gila County Juvenile Detention Center pursuant to this SOW.

7.1.2. The BIA-OJS and the Gila County Juvenile Detention Center agrees to assume its' own liability for any and all claims of any nature, including all costs, expenses and attorney's fees, which may in any manner, result from or arise out of this agreement.

Section 8 - Indemnification, Liability, and Insurance

8.1 The BIA-OJS assumes no liability and will not defend or indemnify for any claims, judgments, or liabilities by third parties for property damage, personal injury, or civil liability arising from the actions of the County or its officers, pursuant to this SOW.

8.2. The Gila County Juvenile Detention Center assumes no liability and will not defend or indemnify for any claims, judgments, or liabilities by third parties for property damage, personal injury, or civil liability arising from the actions of the BIA-OJS.

8.3. Each party shall remain solely responsible for the ordinary expenses of its employees and property, including insurance.

8.4. The Gila County Juvenile Detention Center will at all times maintain insurance coverage to protect the BIA-OJS from reasonable loss by liability claims arising out of the negligence of Grady County Detention or its agents or employees in the performance of this SOW.

8.5. Nothing in this SOW is intended to alter the parties' insurance obligations toward their employees or others.

SECTION F -- DELIVERIES OR PERFORMANCE

F.1 52.242-15 STOP-WORK ORDER AUGUST 1989

(a) The Contracting Officer may, at any time, by written order to the Contractor, require the Contractor to stop all, or any part, of the work called for by this contract for a period of 90 days after the order is delivered to the Contractor, and for any further period to which the parties may agree. The order shall be specifically identified as a stop-work order issued under this clause. Upon receipt of the order, the Contractor shall immediately comply with its terms and take all reasonable steps to minimize the incurrence of costs allocable to the work covered by the order during the period of work stoppage. Within a period of 90 days after a stop-work is delivered to the Contractor, or within any extension of that period to which the parties shall have agreed, the Contracting Officer shall either--

(1) Cancel the stop-work order; or

(2) Terminate the work covered by the order as provided in the Default, or the Termination for Convenience of the Government, clause of this contract.

(b) If a stop-work order issued under this clause is canceled or the period of the order or any extension thereof expires, the Contractor shall resume work. The Contracting Officer shall make an equitable adjustment in the delivery schedule or contract price, or both, and the contract shall be modified, in writing, accordingly, if--

(1) The stop-work order results in an increase in the time required for, or in the Contractor's cost properly allocable to, the performance of any part of this contract; and

(2) The Contractor asserts its right to the adjustment within 30 days after the end of the period of work stoppage; provided, that, if the Contracting Officer decides the facts justify the action, the Contracting Officer may receive and act upon the claim submitted at any time before final payment under this contract.

(c) If a stop-work order is not canceled and the work covered by the order is terminated for the convenience of the Government, the Contracting Officer shall allow reasonable costs resulting from the stop-work order in arriving at the termination settlement.

(d) If a stop-work order is not canceled and the work covered by the order is terminated for default, the Contracting Officer shall allow, by equitable adjustment or otherwise, reasonable costs resulting from the stop-work order.

SECTION G -- CONTRACT ADMINISTRATION DATA

G.1 INVOICE AND PAYMENT

The Contractor shall submit all original invoice(s) to the Designated Billing Office. In addition, one (1) courtesy copy shall be sent to the Contracting Officer and the Contracting Officer's Representative (COR).

Submit original invoices to:

Designated Billing Office: The designated billing office also services as the payment office and will be responsible for obtaining certification from the COR that the payment has been approved (authorized) for payment by the Contracting Officer. Payment will be made by the following designated billing office:

BIA-Albuquerque Accounting Operations
Attn: Cecilia Clark, Financial Manager
1001 Indian School Road NW, Suite 352
Albuquerque, NM 87104
Telephone No.: (505)563-3151 Facsimile No.: (505)563-3038

Submit copy of the invoice to the Contracting Officer:

Gerald Knox, Contract Specialist
BIA-Western Regional Office - Division of Acquisition
2600 N. Central Avenue, 4th Floor
Phoenix, Arizona 85004
Telephone No.: (602)379-4029 Facsimile No.: (602)379-6763

Submit copy of the invoice to the Contracting Officer's Representative:

Jaki Baha-Alchesay, Contracting Officer's Representative
BIA - Western Regional Office
District III/Corrections/LEA
2600 N. Central Avenue, 4th Floor
Phoenix, Arizona 85004
Telephone No.: (602) 379-6958 X1824 Facsimile No.: (602)379-6462

SECTION I -- CONTRACT CLAUSES

I.1 52.212-04 CONTRACT TERMS AND CONDITIONS--COMMERCIAL ITEMS JUNE 2010

(a) Inspection/Acceptance. The Contractor shall only tender for acceptance those items that conform to the requirements of this contract. The Government reserves the right to inspect or test any supplies or services that have been tendered for acceptance. The Government may require repair or replacement of nonconforming supplies or reperformance of nonconforming services at no increase in contract price. If repair/replacement or reperformance will not correct the defects or is not possible, the Government may seek an equitable price reduction or adequate consideration for acceptance of nonconforming supplies or services. The Government must exercise its post-acceptance rights—
(1) within a reasonable time after the defect was discovered or should have been discovered; and
(2) before any substantial change occurs in the condition of the item, unless the change is due to the defect in the item.

(b) Assignment. The Contractor or its assignee may assign its rights to receive payment due as a result of performance of this contract to a bank, trust company, or other financing institution, including any Federal lending agency in accordance with the Assignment of Claims Act (31 U.S.C. 3727). However, when a third party makes payment (e.g., use of the Governmentwide commercial purchase card), the Contractor may not assign its rights to receive payment under this contract.

(c) Changes. Changes in the terms and conditions of this contract may be made only by written agreement of the parties.

(d) Disputes. This contract is subject to the Contract Disputes Act of 1978, as amended (41 U.S.C. 601-613). Failure of the parties to this contract to reach agreement on any request for equitable adjustment, claim, appeal or action arising under or relating to this contract shall be a dispute to be resolved in accordance with the clause at FAR 52.233-01, Disputes, which is incorporated herein by reference. The Contractor shall proceed diligently with performance of this contract, pending final resolution of any dispute arising under the contract.

(e) Definitions. The clause at FAR 52.202-01, Definitions, is incorporated herein by reference.

(f) Excusable delays. The Contractor shall be liable for default unless nonperformance is caused by an occurrence beyond the reasonable control of the Contractor and without its fault or negligence such as, acts of God or the public enemy, acts of the Government in either its sovereign or contractual capacity, fires, floods, epidemics, quarantine restrictions, strikes, unusually severe weather, and delays of common carriers. The Contractor shall notify the Contracting Officer in writing as soon as it is reasonably possible after the commencement or any excusable delay, setting for the full particulars in connection therewith, shall remedy such occurrence with all reasonable dispatch and shall promptly give written notice to the Contracting Officer of the cessation of such occurrence.

(g) Invoice. (1) The Contractor shall submit an original invoice and three copies (or electronic invoice, if authorized) to the address designated in the contract to receive invoices. An invoice must include-

(i) Name and address of the Contractor;
(ii) Invoice date and number;
(iii) Contract number, contract line item number and, if applicable, the order number;
(iv) Description, quantity, unit of measure, unit price and extended price of the items delivered;
(v) Shipping number and date of shipment, including the bill of lading number and weight of shipment if shipped on Government bill of lading;
(vi) Terms of any discount for prompt payment offered;
(vii) Name and address of official to whom payment is to be sent;
(viii) Name, title, and phone number of person to notify in event of defective invoice; and
(ix) Taxpayer Identification Number (TIN). The Contractor shall include its TIN on the invoice only if required elsewhere in this contract.
(x) Electronic funds transfer (EFT) banking information.

(A) The Contractor shall include EFT banking information on the invoice only if required elsewhere in this contract.

(B) If EFT banking information is not required to be on the invoice, in order for the invoice to be a proper invoice, the Contractor shall have submitted correct EFT banking information in accordance with the applicable solicitation provision, contract clause (e.g., 52.232-33, Payment by Electronic Funds Transfer-Central Contractor Registration, or 52.232-34, Payment by Electronic Funds Transfer-Other Than Central Contractor Registration), or applicable agency procedures.

(C) EFT banking information is not required if the Government waived the requirement to pay by EFT.

(2) Invoices will be handled in accordance with the Prompt Payment Act (31 U.S.C. 3903) and Office of Management and Budget (OMB) prompt payment regulations at 5 CFR part 1315.

(h) Patent indemnity. The Contractor shall indemnify the Government and its officers, employees and agents against liability, including costs, for actual or alleged direct or contributory infringement of, or inducement to infringe, any United States or foreign patent, trademark or copyright, arising out of the performance of this contract, provided the Contractor is reasonably notified of such claims and proceedings.

(i) Payment.-(1) Items accepted. Payment shall be made for items accepted by the Government that have been delivered to the delivery destinations set forth in this contract.

(2) Prompt payment. The Government will make payment in accordance with the Prompt Payment Act (31 U.S.C. 3903) and prompt payment regulations at 5 CFR part 1315.

(3) Electronic Funds Transfer (EFT). If the Government makes payment by EFT, see 52.212-5(b) for the appropriate EFT clause.

(4) Discount. In connection with any discount offered for early payment, time shall be computed from the date of the invoice. For the purpose of computing the discount earned, payment shall be considered to have been made on the date which appears on the payment check or the specified payment date if an electronic funds transfer payment is made.

(5) Overpayments. If the Contractor becomes aware of a duplicate contract financing or invoice payment or that the Government has otherwise overpaid on a contract financing or invoice payment, the Contractor shall—

(i) Remit the overpayment amount to the payment office cited in the contract along with a description of the overpayment including the—

(A) Circumstances of the overpayment (e.g., duplicate payment, erroneous payment, liquidation errors, date(s) of overpayment);

(B) Affected contract number and delivery order number, if applicable;

(C) Affected contract line item or subline item, if applicable; and

(D) Contractor point of contact.

(ii) Provide a copy of the remittance and supporting documentation to the Contracting Officer.

(6) Interest. (i) All amounts that become payable by the Contractor to the Government under this contract shall bear simple interest from the date due until paid unless paid within 30 days of becoming due. The interest rate shall be the interest rate established by the Secretary of the Treasury as provided in Section 611 of the Contract Disputes Act of 1978 (Public Law 95-563), which is applicable to the period in which the amount becomes due, as provided in (i)(6)(v) of this clause, and then at the rate applicable for each six-month period as fixed by the Secretary until the amount is paid.

(ii) The Government may issue a demand for payment to the Contractor upon finding a debt is due under the contract.

(iii) Final decisions. The Contracting Officer will issue a final decision as required by 33.211 if—

(A) The Contracting Officer and the Contractor are unable to reach agreement on the existence or amount of a debt within 30 days;

(B) The Contractor fails to liquidate a debt previously demanded by the Contracting Officer within the timeline specified in the demand for payment unless the amounts were not repaid because the Contractor has requested an installment payment agreement; or

(C) The Contractor requests a deferment of collection on a debt previously demanded by the Contracting Officer (see 32.607-2).

(iv) If a demand for payment was previously issued for the debt, the demand for payment included in the final decision shall identify the same due date as the original demand for payment.

(v) Amounts shall be due at the earliest of the following dates:

(A) The date fixed under this contract.

(B) The date of the first written demand for payment, including any demand for payment resulting from a default termination.

(vi) The interest charge shall be computed for the actual number of calendar days involved beginning on the due date and ending on—

(A) The date on which the designated office receives payment from the Contractor;

(B) The date of issuance of a Government check to the Contractor from which an amount otherwise payable has been withheld as a credit against the contract debt; or

(C) The date on which an amount withheld and applied to the contract debt would otherwise have become payable to the Contractor.

(vii) The interest charge made under this clause may be reduced under the procedures prescribed in 32.608-2 of the Federal Acquisition Regulation in effect on the date of this contract.

(j) Risk of loss. Unless the contract specifically provides otherwise, risk of loss or damage to the supplies provided under this contract shall remain with the Contractor until, and shall pass to the Government upon:

(1) Delivery of the supplies to a carrier, if transportation is f.o.b. origin; or

(2) Delivery of the supplies to the Government at the destination specified in the contract, if transportation is f.o.b. destination.

(k) Taxes. The contract price includes all applicable Federal, State, and local taxes and duties.

(l) Termination for the Government's convenience. The Government reserves the right to terminate this contract, or any part hereof, for its sole convenience. In the event of such termination, the Contractor shall immediately stop all work hereunder and shall immediately cause any and all of its suppliers and subcontractors to cease work. Subject to the terms of this contract, the Contractor shall be paid a percentage of the contract price reflecting the percentage of the work performed prior to the notice of termination, plus reasonable charges the Contractor can demonstrate to the satisfaction of the Government using its standard record keeping system, have resulted from the termination. The Contractor shall not be required to comply with the cost accounting standards or contract cost principles for this purpose. This paragraph does not give the Government any right to audit the Contractor's records. The Contractor shall not be paid for any work performed or costs incurred which reasonably could have been avoided.

(m) Termination for cause. The Government may terminate this contract, or any part hereof, for cause in the event of any default by the Contractor, or if the Contractor fails to comply with any contract terms and conditions, or fails to provide the Government, upon request, with adequate assurances of future performance. In the event of termination for cause, the Government shall not be liable to the Contractor for any amount for supplies or services not accepted, and the Contractor shall be liable to the Government for any and all rights and remedies provided by law. If it is determined that the Government improperly terminated this contract for default, such termination shall be deemed a termination for convenience.

(n) Title. Unless specified elsewhere in this contract, title to items furnished under this contract shall pass to the Government upon acceptance, regardless of when or where the Government takes physical possession.

(o) Warranty. The Contractor warrants and implies that the items delivered hereunder are merchantable and fit for use for the particular purpose described in this contract.

(p) Limitation of liability. Except as otherwise provided by an express warranty, the Contractor will not be liable to the Government for consequential damages resulting from any defect or deficiencies in accepted items.

(q) Other compliances. The Contractor shall comply with all applicable Federal, State and local laws, executive orders, rules and regulations applicable to its performance under this contract.

(r) Compliance with laws unique to Government contracts. The Contractor agrees to comply with 31 U.S.C. 1352 relating to limitations on the use of appropriated funds to influence certain Federal contracts; 18 U.S.C. 431 relating to officials not to benefit; 40 U.S.C. 3701, et seq., Contract Work Hours and Safety Standards Act; 41 U.S.C. 51-58, Anti-Kickback Act of 1986; 41 U.S.C. 265 and 10 U.S.C. 2409 relating to whistleblower protections; Section 1553 of the American Recovery and Reinvestment Act of 2009 relating to whistleblower protections; 49 U.S.C. 40118, Fly American; and 41 U.S.C. 423 relating to procurement integrity.

(s) Order of precedence. Any inconsistencies in this solicitation or contract shall be resolved by giving precedence in the following order:
(1) The schedule of supplies/services.
(2) The Assignments, Disputes, Payments, Invoice, Other Compliances, and Compliance with Laws Unique to Government Contracts paragraphs of this clause.
(3) The clause at 52.212-05.
(4) Addenda to this solicitation or contract, including any license agreements for computer software.
(5) Solicitation provisions if this is a solicitation.
(6) Other paragraphs of this clause.
(7) The Standard Form 1449.
(8) Other documents, exhibits, and attachments.
(9) The specification.

(t) Central Contractor Registration (CCR). (1) Unless exempted by an addendum to this contract, the Contractor is responsible during performance and through final payment of any contract for the accuracy and completeness of the data within the CCR database, and for any liability resulting from the Government's reliance on inaccurate or incomplete data. To remain registered in the CCR database after the initial registration, the Contractor is required to review and update on an annual basis from the date of initial registration or subsequent updates its information in the CCR database to ensure it is current, accurate and complete. Updating information in the CCR does not alter the terms and conditions of this contract and is not a substitute for a properly executed contractual document.

(2)(i) If a Contractor has legally changed its business name, "doing business as" name, or division name (whichever is shown on the contract), or has transferred the assets used in performing the contract, but has not completed the necessary requirements regarding novation and change-of-name agreements in FAR Subpart 42.12, the Contractor shall provide the responsible Contracting Officer a minimum of one business day's written notification of its intention to (A) change the name in the CCR database; (B) comply with the requirements of Subpart 42.12; and (C) agree in writing to the timeline and procedures specified by the responsible Contracting Officer. The Contractor must provide with the notification sufficient documentation to support the legally changed name.

(ii) If the Contractor fails to comply with the requirements of paragraph (t)(2)(i) of this clause, or fails to perform the agreement at paragraph (t)(2)(i)(C) of this clause, and, in the absence of a properly executed novation or change-of-name agreement, the CCR information that shows the Contractor to be other than the Contractor indicated in the contract will be considered to be incorrect information within the meaning of the "Suspension of Payment" paragraph of the electronic funds transfer (EFT) clause of this contract.

(3) The Contractor shall not change the name or address for EFT payments or manual payments, as appropriate, in the CCR record to reflect an assignee for the purpose of assignment of claims (see Subpart 32.8, Assignment of Claims). Assignees shall be separately registered in the CCR database. Information provided to the Contractor's CCR record that indicates payments, including those made by EFT, to an ultimate recipient other than that Contractor will be considered to be incorrect information within the meaning of the "Suspension of payment" paragraph of the EFT clause of this contract.

(4) Offerors and Contractors may obtain information on registration and annual confirmation requirements via the internet at http://www.ccr.gov or by calling 1-888-227-2423 or 269-961-5757.

I.2 52.212-05 CONTRACT TERMS AND CONDITIONS REQUIRED TO IMPLEMENT STATUTES OR EXECUTIVE ORDERS--COMMERCIAL ITEMS MARCH 2011

(a) The Contractor shall comply with the following Federal Acquisition Regulation (FAR) clauses, which are incorporated in this contract by reference, to implement provisions of law or Executive orders applicable to acquisitions of commercial items:
(1) 52.222-50, Combating Trafficking in Persons (FEB 2009) (22 U.S.C. 7104(g)).
___Alternate I (AUG 2007) of 52.222-50 (22 U.S.C.7104(g)).

(2) 52.233-3, Protest After Award (AUG 1996) (31 U.S.C. 3553).
(3) 52.233-4, Applicable Law for Breach of Contract Claim (OCT 2004) (Pub. L. 108-77, 108-78).
(b) The Contractor shall comply with the FAR clauses in this paragraph (b) that the Contracting Officer has indicated as being incorporated in this contract by reference to implement provisions of law or Executive orders applicable to acquisitions of commercial items:

__ (1) 52.203-6, Restrictions on Subcontractor Sales to the Government (SEPT 2006), with Alternate I (OCT 1995) (41 U.S.C. 253g and 10 U.S.C. 2402).
_x_ (2) 52.203-13, Contractor Code of Business Ethics and Conduct (APR 2010) (Pub. L. 110-252, Title VI, Chapter 1 (41 U.S.C. 251 note)).
__ (3) 52.203-15, Whistleblower Protections under the American Recovery and Reinvestment Act of 2009 (JUNE 2010) (Section 1553 of Pub. L. 111-5). (Applies to contracts funded by the American Recovery and Reinvestment Act of 2009.)
__ (4) 52.204-10, Reporting Executive Compensation and First-Tier Subcontract Awards (JUL 2010) (Pub. L. 109-282) (31 U.S.C. 6101 note).
__ (5) 52.204-11, American Recovery and Reinvestment Act—Reporting Requirements (JUL 2010) (Pub. L. 111-5).
__ (6) 52.219-3, Notice of Total HUBZone Set-Aside (JAN 1999) (15 U.S.C. 657a).
__ (7) 52.219-4, Notice of Price Evaluation Preference for HUBZone Small Business Concerns (JULY 2005) (if the offeror elects to waive the preference, it shall so indicate in its offer) (15 U.S.C. 657a).
__ (8) [Reserved]
__ (9)(i) 52.219-6, Notice of Total Small Business Set- Aside (JUNE 2003) (15 U.S.C. 644).
__ (ii) Alternate I (OCT 1995) of 52.219-6.
__ (iii) Alternate II (MAR 2004) of 52.219-6.
__ (10)(i) 52.219-7, Notice of Partial Small Business Set-Aside (JUNE 2003) (15 U.S.C. 644).
__ (ii) Alternate I (OCT 1995) of 52.219-7.
__ (iii) Alternate II (MAR 2004) of 52.219-7.
__ (11) 52.219-8, Utilization of Small Business Concerns (MAY 2004) (15 U.S.C. 637(d)(2) and (3)).
__ (12)(i) 52.219-9, Small Business Subcontracting Plan (OCT 2010) (15 U.S.C. 637(d)(4)).
__ (ii) Alternate I (OCT 2001) of 52.219-9.
__ (iii) Alternate II (OCT 2001) of 52.219-9.
__ (iv) Alternate III (JUL 2010) of 52.219-9.
__ (13) 52.219-14, Limitations on Subcontracting (DEC 1996) (15 U.S.C. 637(a)(14)).
__ (14) 52.219-16, Liquidated Damages—Subcontracting Plan (JAN 1999) (15 U.S.C. 637(d)(4)(F)(i)).
__ (15)(i) 52.219-23, Notice of Price Evaluation Adjustment for Small Disadvantaged Business Concerns (OCT 2008) (10 U.S.C. 2323) (if the offeror elects to waive the adjustment, it shall so indicate in its offer).
__ (ii) Alternate I (JUNE 2003) of 52.219-23.
__ (16) 52.219-25, Small Disadvantaged Business Participation Program—Disadvantaged Status and Reporting (APR 2008) (Pub. L. 103-355, section 7102, and 10 U.S.C. 2323).
__ (17) 52.219-26, Small Disadvantaged Business Participation Program— Incentive Subcontracting (OCT 2000) (Pub. L. 103-355, section 7102, and 10 U.S.C. 2323).
__ (18) 52.219-27, Notice of Total Service-Disabled Veteran-Owned Small Business Set-Aside (MAY 2004) (15 U.S.C. 657 f).
__ (19) 52.219-28, Post Award Small Business Program Rerepresentation (APR 2009) (15 U.S.C. 632(a)(2)).
_x_ (20) 52.222-3, Convict Labor (JUNE 2003) (E.O. 11755).
_x_ (21) 52.222-19, Child Labor—Cooperation with Authorities and Remedies (JUL 2010) (E.O. 13126).
__ (22) 52.222-21, Prohibition of Segregated Facilities (FEB 1999).
_x_ (23) 52.222-26, Equal Opportunity (MAR 2007) (E.O. 11246).
_x_ (24) 52.222-35, Equal Opportunity for Veterans (SEP 2010) (38 U.S.C. 4212).
_x_ (25) 52.222-36, Affirmative Action for Workers with Disabilities (OCT 2010) (29 U.S.C. 793).
_x_ (26) 52.222-37, Employment Reports on Veterans (SEP 2010) (38 U.S.C. 4212).
_x_ (27) 52.222-54, Employment Eligibility Verification (JAN 2009). (Executive Order 12989). (Not applicable to the acquisition of commercially available off-the-shelf items or certain other types of commercial items as prescribed in 22.1803.)
__ (28)(i) 52.223-9, Estimate of Percentage of Recovered Material Content for EPA–Designated Items (MAY 2008) (42 U.S.C. 6962(c)(3)(A)(ii)). (Not applicable to the acquisition of commercially available off-the-shelf items.)
__ (ii) Alternate I (MAY 2008) of 52.223-9 (42 U.S.C. 6962(i)(2)(C)). (Not applicable to the acquisition of commercially available off-the-shelf items.)
__ (29) 52.223-15, Energy Efficiency in Energy- Consuming Products (DEC 2007) (42 U.S.C. 8259b).
__ (30)(i) 52.223-16, IEEE 1680 Standard for the Environmental Assessment of Personal Computer Products (DEC 2007) (E.O. 13423).
__ (ii) Alternate I (DEC 2007) of 52.223-16.
_x_ (31) 52.223-18, Contractor Policy to Ban Text Messaging While Driving (SEP 2010) (E.O. 13513).

__(32) 52.225-1, Buy American Act—Supplies (FEB 2009) (41 U.S.C. 10a-10d).
__ (33)(i) 52.225-3, Buy American Act—Free Trade Agreements—Israeli Trade Act (JUNE 2009) (41 U.S.C. 10a-10d, 19 U.S.C. 3301 note, 19 U.S.C. 2112 note, 19 U.S.C. 3805 note, Pub. L. 108-77, 108-78, 108-286, 108-302, 109-53, 109-169, 109-283, and 110-138).
__ (ii) Alternate I (JAN 2004) of 52.225-3.
__ (iii) Alternate II (JAN 2004) of 52.225-3.
__ (34) 52.225-5, Trade Agreements (AUG 2009) (19 U.S.C. 2501, et seq., 19 U.S.C. 3301 note).
__ (35) 52.225-13, Restrictions on Certain Foreign Purchases (JUNE 2008) (E.O.'s, proclamations, and statutes administered by the Office of Foreign Assets Control of the Department of the Treasury).
__ (36) 52.226-4, Notice of Disaster or Emergency Area Set-Aside (NOV 2007) (42 U.S.C. 5150).
__ (37) 52.226-5, Restrictions on Subcontracting Outside Disaster or Emergency Area (NOV 2007) (42 U.S.C.5150).
__ (38) 52.232-29, Terms for Financing of Purchases of Commercial Items (FEB 2002) (41 U.S.C. 255(f), 10 U.S.C. 2307(f)).
__ (39) 52.232-30, Installment Payments for Commercial Items (OCT 1995) (41 U.S.C. 255(f), 10 U.S.C. 2307(f)).
_x_ (40) 52.232-33, Payment by Electronic Funds Transfer—Central Contractor Registration (OCT 2003) (31 U.S.C. 3332).
__ (41) 52.232-34, Payment by Electronic Funds Transfer—Other than Central Contractor Registration (MAY 1999) (31 U.S.C. 3332).
__ (42) 52.232-36, Payment by Third Party (FEB 2010) (31 U.S.C. 3332).
__ (43) 52.239-1, Privacy or Security Safeguards (AUG 1996) (5 U.S.C. 552a).
__ (44)(i) 52.247-64, Preference for Privately Owned U.S.-Flag Commercial Vessels (FEB 2006) (46 U.S.C. Appx. 1241(b) and 10 U.S.C. 2631).
__ (ii) Alternate I (Apr 2003) of 52.247-64.
(c) The Contractor shall comply with the FAR clauses in this paragraph (c), applicable to commercial services, that the Contracting Officer has indicated as being incorporated in this contract by reference to implement provisions of law or Executive orders applicable to acquisitions of commercial items:

_x_ (1) 52.222-41, Service Contract Act of 1965 (Nov 2007) (41 U.S.C. 351, et seq.).
__ (2) 52.222-42, Statement of Equivalent Rates for Federal Hires (MAY 1989) (29 U.S.C. 206 and 41 U.S.C. 351, et seq.).
__ (3) 52.222-43, Fair Labor Standards Act and Service Contract Act—Price Adjustment (Multiple Year and Option Contracts) (SEP 2009) (29 U.S.C. 206 and 41 U.S.C. 351, et seq.).
__ (4) 52.222-44, Fair Labor Standards Act and Service Contract Act—Price Adjustment (SEP 2009) (29 U.S.C. 206 and 41 U.S.C. 351, et seq.).
__ (5) 52.222-51, Exemption from Application of the Service Contract Act to Contracts for Maintenance, Calibration, or Repair of Certain Equipment--Requirements (NOV 2007) (41 351, et seq.).
__ (6) 52.222-53, Exemption from Application of the Service Contract Act to Contracts for Certain Services— Requirements (FEB 2009) (41 U.S.C. 351, et seq.).
_x_ (7) 52.226-6, Promoting Excess Food Donation to Nonprofit Organizations (MAR 2009) (Pub. L. 110-247).
__ (8) 52.237-11, Accepting and Dispensing of $1 Coin (SEPT 2008) (31 U.S.C. 5112(p)(1)).
(d) Comptroller General Examination of Record. The Contractor shall comply with the provisions of this paragraph (d) if this contract was awarded using other than sealed bid, is in excess of the simplified acquisition threshold, and does not contain the clause at 52.215-2, Audit and Records--Negotiation.
(1) The Comptroller General of the United States, or an authorized representative of the Comptroller General, shall have access to and right to examine any of the Contractor's directly pertinent records involving transactions related to this contract.
(2) The Contractor shall make available at its offices at all reasonable times the records, materials, and other evidence for examination, audit, or reproduction, until 3 years after final payment under this contract or for any shorter period specified in FAR Subpart 4.7, Contractor Records Retention, of the other clauses of this contract. If this contract is completely or partially terminated, the records relating to the work terminated shall be made available for 3 years after any resulting final termination settlement. Records relating to ment of claims arising under or relating to this contract shall be made available until such appeals, litigation, or claims are finally resolved.
(3) As used in this clause, records include books, documents, accounting procedures and practices, and other data, regardless of type and regardless of form. This does not require the Contractor to create or maintain any record that the Contractor does not maintain in the ordinary course of business or pursuant to a provision of law.
(e)(1) Notwithstanding the requirements of the clauses in paragraphs (a), (b), (c), and (d) of this clause, the Contractor is not required to flow down any FAR clause, other than those in this paragraph (e)(1) in a subcontract for commercial items. Unless otherwise indicated below, the extent of the flow down shall be as required by the clause—
(i) 52.203-13, Contractor Code of Business Ethics and Conduct (APR 2010) (Pub. L. 110-252, Title VI, Chapter 1 (41 U.S.C. 251 note)).
(ii) 52.219-8, Utilization of Small Business Concerns (MAY 2004) (15 U.S.C. 637(d)(2) and (3)), in all subcontracts that offer further subcontracting opportunities. If the subcontract (except subcontracts to small business concerns) exceeds $650,000 ($1.5 million for

construction of any public facility), the subcontractor must include 52.219-8 in lower tier subcontracts that offer subcontracting opportunities.
(iii) [Reserved]
(iv) 52.222-26, Equal Opportunity (MAR 2007) (E.O. 11246).
(v) 52.222-35, Equal Opportunity for Veterans (SEP 2010) (38 U.S.C. 4212).
(vi) 52.222-36, Affirmative Action for Workers with Disabilities (OCT 2010) (29 U.S.C. 793).
(vii) [Reserved]
(viii) 52.222-41, Service Contract Act of 1965 (NOV 2007) (41 U.S.C. 351, et seq.).
(ix) 52.222-50, Combating Trafficking in Persons (FEB 2009) (22 U.S.C. 7104(g)).
___Alternate I (AUG 2007) of 52.222-50 (22 U.S.C. 7104(g)).
(x) 52.222-51, Exemption from Application of the Service Contract Act to Contracts for Maintenance, Calibration, or Repair of Certain Equipment-Requirements (NOV 2007) (41 U.S.C. 351, et seq.).
(xi) 52.222-53, Exemption from Application of the Service Contract Act to Contracts for Certain Services-Requirements (FEB 2009) (41 U.S.C. 351, et seq.).
(xii) 52.222-54, Employment Eligibility Verification (JAN 2009).
(xiii) 52.226-6, Promoting Excess Food Donation to Nonprofit Organizations (MAR 2009) (Pub. L. 110-247). Flow down required in accordance with paragraph (e) of FAR clause 52.226-6.
(xiv) 52.247-64, Preference for Privately Owned U.S.-Flag Commercial Vessels (FEB 2006) (46 U.S.C. Appx. 1241(b) and 10 U.S.C. 2631). Flow down required in accordance with paragraph (d) of FAR clause 52.247-64.
(2) While not required, the contractor may include in its subcontracts for commercial items a minimal number of additional clauses necessary to satisfy its contractual obligations.

I.3 52.217-08 OPTION TO EXTEND SERVICES NOVEMBER 1999

The Government may require continued performance of any services within the limits and at the rates specified in the contract. These rates may be adjusted only as a result of revisions to prevailing labor rates provided by the Secretary of Labor. The option provision may be exercised more than once, but the total extension of performance hereunder shall not exceed 6 months. The Contracting Officer may exercise the option by written notice to the Contractor within **30 calendar days**.

I.4 52.217-09 OPTION TO EXTEND THE TERM OF THE CONTRACT MARCH 2000

(a) The Government may extend the term of this contract by written notice to the Contractor within **30 days**; provided that the Government gives the Contractor a preliminary written notice of its intent to extend at least **60 days** before the contract expires. The preliminary notice does not commit the Government to an extension.

(b) If the Government exercises this option, the extended contract shall be considered to include this option clause.

(c) The total duration of this contract, including the exercise of any options under this clause, shall not exceed **5 years (Base Year + 4 Option Years)**.

I.5 52.232-18 AVAILABILITY OF FUNDS APRIL 1984

Funds are not presently available for this contract. The Government's obligation under this contract is contingent upon the availability of appropriated funds from which payment for contract purposes can be made. No legal liability on the part of the Government for any payment may arise until funds are made available to the Contracting Officer for this contract and until the Contractor receives notice of such availability, to be confirmed in writing by the Contracting Officer.

I.6 52.232-19 AVAILABILITY OF FUNDS FOR THE NEXT FISCAL APRIL 1984

YEAR

Funds are not presently available for performance under this contract beyond **December 31, 2011** . The Government's obligation for performance of this contract beyond that date is contingent upon the availability of appropriated funds from which payment for contract purposes can be made. No legal liability on the part of the Government for any payment may arise for performance under this contract beyond **December 31, 2011**, *until funds are made available to the Contracting Officer for performance and until the* Contractor receives notice of availability, to be confirmed in writing by the Contracting Officer.

SECTION J -- LIST OF DOCUMENTS, EXHIBITS AND OTHER ATTACHMENTS

J.1 ALL DOI NATIONWIDE - PROHIBITION ON TEXTING WHILE DRIVING

Memorandum

To: **All DOI Employees**

From: **Deputy Secretary**

Subject: **Prohibition on Texting While Driving**

Recent deadly crashes involving drivers distracted by text messaging while driving highlight a growing danger. Text messaging causes drivers to take their eyes off the road and at least one hand off the steering wheel, endangering both themselves and others. President Obama recently issued Executive Order 13513, "Federal Leadership on Reducing Text Messaging While Driving." This important order prohibits Federal employees from text messaging while doing any of the following:

" Driving Government-owned, Government-leased, or Government-rented vehicles (GOVs);
" Driving privately-owned vehicles (POV) while on official Government business; and
" Using electronic equipment supplied by the Government (including, but not limited to, cell phones, Blackberries, or other electronic devices) while driving.

A Federal Government-wide prohibition on the use of text messaging while driving on official business or while using Government-supplied equipment will help save lives, reduce injuries, and set an example for state and local governments, private employers, and individual drivers.

Texting or text messaging means reading from or entering data into any handheld or other electronic device, including SMS texting, e-mailing, instant messaging, obtaining navigational information, or engaging in any other form of electronic data retrieval or electronic data communication.

In addition, the Executive Order requires Federal agencies to take steps to encourage Federal contractors, subcontractors, recipients, and sub recipients of financial assistance to adopt and enforce their own policies that ban employees from texting while driving GOVs or company-owned, company-leased, or company-rented vehicles or while driving POVs on official Government business or when performing work for, or on behalf of, the Government. Those entities are further encouraged to educate their employees and to urge voluntary compliance with a texting ban for off-duty employees.

All DOI employees are directed to comply with E.O. 13513 immediately, and human capital, procurement, and other applicable teams are directed to update all relevant policies and procedures to include the express prohibitions of the Order as soon as possible. In addition, employees and contractors are strongly encouraged to refrain from off-duty text messaging on personal devices while operating POVs.

PROHIBITION ON TEXT MESSAGING AND USING ELECTRONIC EQUIPMENT SUPPLIED BY THE GOVERNMENT WHILE DRIVING:
Executive Order 13513, Federal Leadership On Reducing Text Messaging While Driving, was signed by President Barack Obama on October 1, 2009 (Ref.: http://edocket.access.gpo.gov/2009/pdf/E9-24203.pdf). This Executive Order introduces a Federal Government-wide prohibition on the use of text messaging while driving on official business or while using Government-supplied equipment. Additional guidance enforcing the ban will be issued at a later date. In the meantime, please adopt and enforce policies that immediately ban text messaging while driving company-owned or rented vehicles, government-owned or leased vehicles, or while driving privately owned vehicles when on official government business or w hen performing any work for or on behalf of the government. Clause 1450-0016-002 is provided in Section I.

J.2 MEDICAL VOUCHER - ATTACHMENT 1

United States Department of the Interior
BUREAU OF INDIAN AFFAIRS
Office of Justice Services
Division of Corrections

MEDICAL VOUCHER
(Attach original invoices only, statements will not be accepted)

I certify that services have been rendered as indicated on the invoice and payment is now due for care provided for Tribal inmate/prisoner as listed on the attached invoice.

Signature of Certifying Official	Title	Date

J.3 SERVICE CONTRACT ACT - WAGE DETERMINATIONS

WD 05-2024 (Rev.-13) was first posted on www.wdol.gov on 12/14/2010
****

REGISTER OF WAGE DETERMINATIONS UNDER | U.S. DEPARTMENT OF LABOR
THE SERVICE CONTRACT ACT | EMPLOYMENT STANDARDS ADMINISTRATION
By direction of the Secretary of Labor | WAGE AND HOUR DIVISION
| WASHINGTON D.C. 20210
|
|
|
| Wage Determination No.: 2005-2024
Shirley F. Ebbesen Division of | Revision No.: 13
Director Wage Determinations| Date Of Revision: 12/08/2010

State: Arizona

Area: Arizona Counties of Apache, Coconino, Gila, Maricopa, Navajo, Pinal, Yavapai

Fringe Benefits Required Follow the Occupational Listing

OCCUPATION CODE - TITLE	FOOTNOTE	RATE
01000 - Administrative Support And Clerical Occupations		
01011 - Accounting Clerk I		14.85
01012 - Accounting Clerk II		16.68
01013 - Accounting Clerk III		18.65
01020 - Administrative Assistant		25.36
01040 - Court Reporter		16.73
01051 - Data Entry Operator I		12.52
01052 - Data Entry Operator II		13.66
01060 - Dispatcher, Motor Vehicle		16.40
01070 - Document Preparation Clerk		13.55
01090 - Duplicating Machine Operator		13.55
01111 - General Clerk I		12.53
01112 - General Clerk II		13.67
01113 - General Clerk III		15.34
01120 - Housing Referral Assistant		20.78
01141 - Messenger Courier		12.33
01191 - Order Clerk I		12.32
01192 - Order Clerk II		14.86
01261 - Personnel Assistant (Employment) I		14.98
01262 - Personnel Assistant (Employment) II		16.76
01263 - Personnel Assistant (Employment) III		18.69
01270 - Production Control Clerk		20.26
01280 - Receptionist		12.58
01290 - Rental Clerk		14.97
01300 - Scheduler, Maintenance		16.66
01311 - Secretary I		16.66
01312 - Secretary II		18.64
01313 - Secretary III		20.78
01320 - Service Order Dispatcher		14.32
01410 - Supply Technician		25.36
01420 - Survey Worker		16.63
01531 - Travel Clerk I		13.28
01532 - Travel Clerk II		14.46
01533 - Travel Clerk III		15.61
01611 - Word Processor I		13.82

01612 - Word Processor II 15.78
01613 - Word Processor III 17.54
05000 - Automotive Service Occupations
05005 - Automobile Body Repairer, Fiberglass 20.34
05010 - Automotive Electrician 20.30
05040 - Automotive Glass Installer 19.42
05070 - Automotive Worker 19.42
05110 - Mobile Equipment Servicer 16.62
05130 - Motor Equipment Metal Mechanic 22.69
05160 - Motor Equipment Metal Worker 19.62
05190 - Motor Vehicle Mechanic 21.59
05220 - Motor Vehicle Mechanic Helper 15.12
05250 - Motor Vehicle Upholstery Worker 18.14
05280 - Motor Vehicle Wrecker 19.62
05310 - Painter, Automotive 22.12
05340 - Radiator Repair Specialist 19.58
05370 - Tire Repairer 14.21
05400 - Transmission Repair Specialist 21.59
07000 - Food Preparation And Service Occupations
07010 - Baker 12.03
07041 - Cook I 10.50
07042 - Cook II 12.16
07070 - Dishwasher 8.60
07130 - Food Service Worker 10.17
07210 - Meat Cutter 16.58
07260 - Waiter/Waitress 9.75
09000 - Furniture Maintenance And Repair Occupations
09010 - Electrostatic Spray Painter 16.50
09040 - Furniture Handler 10.88
09080 - Furniture Refinisher 16.50
09090 - Furniture Refinisher Helper 12.16
09110 - Furniture Repairer, Minor 14.59
09130 - Upholsterer 16.50
11000 - General Services And Support Occupations
11030 - Cleaner, Vehicles 9.97
11060 - Elevator Operator 9.97
11090 - Gardener 12.96
11122 - Housekeeping Aide 11.10
11150 - Janitor 11.10
11210 - Laborer, Grounds Maintenance 10.31
11240 - Maid or Houseman 9.59
11260 - Pruner 10.14
11270 - Tractor Operator 12.53
11330 - Trail Maintenance Worker 10.31
11360 - Window Cleaner 12.00
12000 - Health Occupations
12010 - Ambulance Driver 13.87
12011 - Breath Alcohol Technician 18.71
12012 - Certified Occupational Therapist Assistant 24.60
12015 - Certified Physical Therapist Assistant 18.94
12020 - Dental Assistant 16.61
12025 - Dental Hygienist 34.70
12030 - EKG Technician 21.08
12035 - Electroneurodiagnostic Technologist 21.08
12040 - Emergency Medical Technician 13.87
12071 - Licensed Practical Nurse I 16.73
12072 - Licensed Practical Nurse II 18.71
12073 - Licensed Practical Nurse III 20.87
12100 - Medical Assistant 14.39

12130 - Medical Laboratory Technician 19.61
12160 - Medical Record Clerk 13.11
12190 - Medical Record Technician 15.57
12195 - Medical Transcriptionist 17.02
12210 - Nuclear Medicine Technologist 33.98
12221 - Nursing Assistant I 10.25
12222 - Nursing Assistant II 11.53
12223 - Nursing Assistant III 12.58
12224 - Nursing Assistant IV 14.12
12235 - Optical Dispenser 15.39
12236 - Optical Technician 14.85
12250 - Pharmacy Technician 14.15
12280 - Phlebotomist 14.12
12305 - Radiologic Technologist 24.34
12311 - Registered Nurse I 26.93
12312 - Registered Nurse II 33.08
12313 - Registered Nurse II, Specialist 33.08
12314 - Registered Nurse III 40.02
12315 - Registered Nurse III, Anesthetist 40.02
12316 - Registered Nurse IV 47.96
12317 - Scheduler (Drug and Alcohol Testing) 23.09
13000 - Information And Arts Occupations
13011 - Exhibits Specialist I 17.08
13012 - Exhibits Specialist II 21.08
13013 - Exhibits Specialist III 25.71
13041 - Illustrator I 18.79
13042 - Illustrator II 23.18
13043 - Illustrator III 28.27
13047 - Librarian 23.06
13050 - Library Aide/Clerk 14.20
13054 - Library Information Technology Systems Administrator 20.92
13058 - Library Technician 14.08
13061 - Media Specialist I 15.03
13062 - Media Specialist II 16.81
13063 - Media Specialist III 18.75
13071 - Photographer I 14.99
13072 - Photographer II 17.27
13073 - Photographer III 21.32
13074 - Photographer IV 26.01
13075 - Photographer V 31.55
13110 - Video Teleconference Technician 16.68
14000 - Information Technology Occupations
14041 - Computer Operator I 15.04
14042 - Computer Operator II 17.51
14043 - Computer Operator III 20.13
14044 - Computer Operator IV 22.75
14045 - Computer Operator V 24.82
14071 - Computer Programmer I 23.00
14072 - Computer Programmer II 24.90
14073 - Computer Programmer III (see 1)
14074 - Computer Programmer IV (see 1)
14101 - Computer Systems Analyst I (see 1)
14102 - Computer Systems Analyst II (see 1)
14103 - Computer Systems Analyst III (see 1)
14150 - Peripheral Equipment Operator 15.04
14160 - Personal Computer Support Technician 22.75
15000 - Instructional Occupations
15010 - Aircrew Training Devices Instructor (Non-Rated) 29.46

15020 - Aircrew Training Devices Instructor (Rated) 36.56
15030 - Air Crew Training Devices Instructor (Pilot) 40.22
15050 - Computer Based Training Specialist / Instructor 29.46
15060 - Educational Technologist 21.91
15070 - Flight Instructor (Pilot) 40.22
15080 - Graphic Artist 21.68
15090 - Technical Instructor 20.91
15095 - Technical Instructor/Course Developer 25.58
15110 - Test Proctor 16.87
15120 - Tutor 16.87
16000 - Laundry, Dry-Cleaning, Pressing And Related Occupations
16010 - Assembler 9.06
16030 - Counter Attendant 9.06
16040 - Dry Cleaner 11.32
16070 - Finisher, Flatwork, Machine 9.06
16090 - Presser, Hand 9.06
16110 - Presser, Machine, Drycleaning 9.06
16130 - Presser, Machine, Shirts 9.06
16160 - Presser, Machine, Wearing Apparel, Laundry 9.06
16190 - Sewing Machine Operator 12.05
16220 - Tailor 12.81
16250 - Washer, Machine 9.86
19000 - Machine Tool Operation And Repair Occupations
19010 - Machine-Tool Operator (Tool Room) 16.74
19040 - Tool And Die Maker 22.78
21000 - Materials Handling And Packing Occupations
21020 - Forklift Operator 13.52
21030 - Material Coordinator 19.58
21040 - Material Expediter 19.58
21050 - Material Handling Laborer 11.91
21071 - Order Filler 12.24
21080 - Production Line Worker (Food Processing) 13.52
21110 - Shipping Packer 14.52
21130 - Shipping/Receiving Clerk 14.52
21140 - Store Worker I 9.13
21150 - Stock Clerk 14.39
21210 - Tools And Parts Attendant 13.52
21410 - Warehouse Specialist 13.52
23000 - Mechanics And Maintenance And Repair Occupations
23010 - Aerospace Structural Welder 26.77
23021 - Aircraft Mechanic I 25.34
23022 - Aircraft Mechanic II 26.77
23023 - Aircraft Mechanic III 28.40
23040 - Aircraft Mechanic Helper 17.74
23050 - Aircraft, Painter 24.07
23060 - Aircraft Servicer 21.28
23080 - Aircraft Worker 22.80
23110 - Appliance Mechanic 18.79
23120 - Bicycle Repairer 12.92
23125 - Cable Splicer 29.26
23130 - Carpenter, Maintenance 17.36
23140 - Carpet Layer 15.63
23160 - Electrician, Maintenance 20.14
23181 - Electronics Technician Maintenance I 18.00
23182 - Electronics Technician Maintenance II 23.29
23183 - Electronics Technician Maintenance III 25.37
23260 - Fabric Worker 14.70
23290 - Fire Alarm System Mechanic 19.80
23310 - Fire Extinguisher Repairer 15.17

23311 - Fuel Distribution System Mechanic 29.33
23312 - Fuel Distribution System Operator 20.70
23370 - General Maintenance Worker 17.48
23380 - Ground Support Equipment Mechanic 25.34
23381 - Ground Support Equipment Servicer 21.28
23382 - Ground Support Equipment Worker 22.80
23391 - Gunsmith I 15.17
23392 - Gunsmith II 18.14
23393 - Gunsmith III 21.09
23410 - Heating, Ventilation And Air-Conditioning Mechanic 19.83
23411 - Heating, Ventilation And Air Contditioning Mechanic (Research Facility) 20.95
23430 - Heavy Equipment Mechanic 21.55
23440 - Heavy Equipment Operator 21.23
23460 - Instrument Mechanic 24.18
23465 - Laboratory/Shelter Mechanic 19.62
23470 - Laborer 11.55
23510 - Locksmith 19.50
23530 - Machinery Maintenance Mechanic 25.00
23550 - Machinist, Maintenance 17.73
23580 - Maintenance Trades Helper 13.00
23591 - Metrology Technician I 24.18
23592 - Metrology Technician II 25.25
23593 - Metrology Technician III 26.51
23640 - Millwright 23.72
23710 - Office Appliance Repairer 19.75
23760 - Painter, Maintenance 16.50
23790 - Pipefitter, Maintenance 20.86
23810 - Plumber, Maintenance 19.81
23820 - Pneudraulic Systems Mechanic 21.09
23850 - Rigger 21.09
23870 - Scale Mechanic 18.14
23890 - Sheet-Metal Worker, Maintenance 17.99
23910 - Small Engine Mechanic 16.52
23931 - Telecommunications Mechanic I 22.60
23932 - Telecommunications Mechanic II 26.99
23950 - Telephone Lineman 18.23
23960 - Welder, Combination, Maintenance 17.37
23965 - Well Driller 21.09
23970 - Woodcraft Worker 21.09
23980 - Woodworker 14.71
24000 - Personal Needs Occupations
24570 - Child Care Attendant 10.73
24580 - Child Care Center Clerk 16.79
24610 - Chore Aide 10.71
24620 - Family Readiness And Support Services Coordinator 15.56
24630 - Homemaker 18.38
25000 - Plant And System Operations Occupations
25010 - Boiler Tender 23.78
25040 - Sewage Plant Operator 22.71
25070 - Stationary Engineer 23.78
25190 - Ventilation Equipment Tender 14.81
25210 - Water Treatment Plant Operator 22.71
27000 - Protective Service Occupations
27004 - Alarm Monitor 18.73
27007 - Baggage Inspector 11.01
27008 - Corrections Officer 19.77

27010 - Court Security Officer 20.49
27030 - Detection Dog Handler 16.13
27040 - Detention Officer 19.77
27070 - Firefighter 21.80
27101 - Guard I 11.01
27102 - Guard II 16.13
27131 - Police Officer I 25.69
27132 - Police Officer II 28.53
28000 - Recreation Occupations
28041 - Carnival Equipment Operator 13.84
28042 - Carnival Equipment Repairer 15.17
28043 - Carnival Equpment Worker 9.89
28210 - Gate Attendant/Gate Tender 14.95
28310 - Lifeguard 11.90
28350 - Park Attendant (Aide) 16.73
28510 - Recreation Aide/Health Facility Attendant 12.21
28515 - Recreation Specialist 17.99
28630 - Sports Official 13.33
28690 - Swimming Pool Operator 19.72
29000 - Stevedoring/Longshoremen Occupational Services
29010 - Blocker And Bracer 19.45
29020 - Hatch Tender 19.45
29030 - Line Handler 19.45
29041 - Stevedore I 17.16
29042 - Stevedore II 21.45
30000 - Technical Occupations
30010 - Air Traffic Control Specialist, Center (HFO) (see 2) 35.77
30011 - Air Traffic Control Specialist, Station (HFO) (see 2) 24.66
30012 - Air Traffic Control Specialist, Terminal (HFO) (see 2) 27.16
30021 - Archeological Technician I 17.49
30022 - Archeological Technician II 19.58
30023 - Archeological Technician III 24.25
30030 - Cartographic Technician 24.59
30040 - Civil Engineering Technician 21.56
30061 - Drafter/CAD Operator I 17.49
30062 - Drafter/CAD Operator II 19.84
30063 - Drafter/CAD Operator III 22.12
30064 - Drafter/CAD Operator IV 26.82
30081 - Engineering Technician I 16.02
30082 - Engineering Technician II 17.98
30083 - Engineering Technician III 21.48
30084 - Engineering Technician IV 25.33
30085 - Engineering Technician V 30.27
30086 - Engineering Technician VI 34.64
30090 - Environmental Technician 22.20
30210 - Laboratory Technician 22.92
30240 - Mathematical Technician 24.69
30361 - Paralegal/Legal Assistant I 21.19
30362 - Paralegal/Legal Assistant II 25.09
30363 - Paralegal/Legal Assistant III 30.61
30364 - Paralegal/Legal Assistant IV 37.15
30390 - Photo-Optics Technician 24.69
30461 - Technical Writer I 22.49
30462 - Technical Writer II 27.51
30463 - Technical Writer III 31.24
30491 - Unexploded Ordnance (UXO) Technician I 22.74
30492 - Unexploded Ordnance (UXO) Technician II 27.51
30493 - Unexploded Ordnance (UXO) Technician III 32.97
30494 - Unexploded (UXO) Safety Escort 22.74

30495 - Unexploded (UXO) Sweep Personnel 22.74
30620 - Weather Observer, Combined Upper Air Or Surface Programs (see 2) 22.12
30621 - Weather Observer, Senior (see 2) 24.12
31000 - Transportation/Mobile Equipment Operation Occupations
31020 - Bus Aide 8.17
31030 - Bus Driver 17.45
31043 - Driver Courier 13.84
31260 - Parking and Lot Attendant 10.32
31290 - Shuttle Bus Driver 15.35
31310 - Taxi Driver 10.88
31361 - Truckdriver, Light 15.35
31362 - Truckdriver, Medium 18.71
31363 - Truckdriver, Heavy 19.29
31364 - Truckdriver, Tractor-Trailer 19.29
99000 - Miscellaneous Occupations
99030 - Cashier 11.86
99050 - Desk Clerk 10.74
99095 - Embalmer 24.27
99251 - Laboratory Animal Caretaker I 10.57
99252 - Laboratory Animal Caretaker II 13.33
99310 - Mortician 28.19
99410 - Pest Controller 14.44
99510 - Photofinishing Worker 13.44
99710 - Recycling Laborer 18.15
99711 - Recycling Specialist 23.31
99730 - Refuse Collector 17.29
99810 - Sales Clerk 12.38
99820 - School Crossing Guard 8.69
99830 - Survey Party Chief 26.46
99831 - Surveying Aide 15.94
99832 - Surveying Technician 22.46
99840 - Vending Machine Attendant 14.89
99841 - Vending Machine Repairer 18.88
99842 - Vending Machine Repairer Helper 14.89

ALL OCCUPATIONS LISTED ABOVE RECEIVE THE FOLLOWING BENEFITS:

HEALTH & WELFARE: Life, accident, and health insurance plans, sick leave, pension plans, civic and personal leave, severance pay, and savings and thrift plans. Minimum employer contributions costing an average of $3.50 per hour computed on the basis of all hours worked by service employees employed on the contract.

VACATION: 2 weeks paid vacation after 1 year of service with a contractor or successor; 3 weeks after 5 years, and 4 weeks after 15 years. Length of service includes the whole span of continuous service with the present contractor or successor, wherever employed, and with the predecessor contractors in the performance of similar work at the same Federal facility. (Reg. 29 CFR 4.173)

HOLIDAYS: A minimum of ten paid holidays per year, New Year's Day, Martin Luther King Jr's Birthday, Washington's Birthday, Memorial Day, Independence Day, Labor Day, Columbus Day, Veterans' Day, Thanksgiving Day, and Christmas Day. (A contractor may substitute for any of the named holidays another day off with pay in accordance with a plan communicated to the employees involved.) (See 29 CFR 4174)

THE OCCUPATIONS WHICH HAVE NUMBERED FOOTNOTES IN PARENTHESES RECEIVE THE FOLLOWING:

1) COMPUTER EMPLOYEES: Under the SCA at section 8(b), this wage determination does not apply to any employee who individually qualifies as a bona fide executive, administrative, or professional employee as defined in 29 C.F.R. Part 541. Because most Computer System Analysts and Computer Programmers who are compensated at a rate not less than $27.63 (or on a salary or fee basis at a rate not less than $455 per week) an hour would likely qualify as exempt computer professionals, (29 C.F.R. 541. 400) wage rates may not be listed on this wage determination for all occupations within those job families. In addition, because this wage determination may not list a wage rate for some or all occupations within those job families if the survey data indicates that the prevailing wage rate for the occupation equals or exceeds $27.63 per hour conformances may be necessary for certain nonexempt employees. For example, if an individual employee is nonexempt but nevertheless performs duties within the scope of one of the Computer Systems Analyst or Computer Programmer occupations for which this wage determination does not specify an SCA wage rate, then the wage rate for that employee must be conformed in accordance with the conformance procedures described in the conformance note included on this wage determination.

Additionally, because job titles vary widely and change quickly in the computer industry, job titles are not determinative of the application of the computer professional exemption. Therefore, the exemption applies only to computer employees who satisfy the compensation requirements and whose primary duty consists of:
(1) The application of systems analysis techniques and procedures, including consulting with users, to determine hardware, software or system functional specifications;
(2) The design, development, documentation, analysis, creation, testing or modification of computer systems or programs, including prototypes, based on and related to user or system design specifications;
(3) The design, documentation, testing, creation or modification of computer programs related to machine operating systems; or
(4) A combination of the aforementioned duties, the performance of which requires the same level of skills. (29 C.F.R. 541.400).

2) AIR TRAFFIC CONTROLLERS AND WEATHER OBSERVERS - NIGHT PAY & SUNDAY PAY: If you work at night as part of a regular tour of duty, you will earn a night differential and receive an additional 10% of basic pay for any hours worked between 6pm and 6am. If you are a full-time employed (40 hours a week) and Sunday is part of your regularly scheduled workweek, you are paid at your rate of basic pay plus a Sunday premium of 25% of your basic rate for each hour of Sunday work which is not overtime (i.e. occasional work on Sunday outside the normal tour of duty is considered overtime work).

HAZARDOUS PAY DIFFERENTIAL: An 8 percent differential is applicable to employees employed in a position that represents a high degree of hazard when working with or in close proximity to ordinance, explosives, and incendiary materials. This includes work such as screening, blending, dying, mixing, and pressing of sensitive ordance, explosives, and pyrotechnic compositions such as lead azide, black powder and photoflash powder. All dry-house activities involving propellants or explosives. Demilitarization, modification, renovation, demolition, and maintenance operations on sensitive ordnance, explosives and incendiary materials. All operations involving regrading and cleaning of artillery ranges.

A 4 percent differential is applicable to employees employed in a position that

represents a low degree of hazard when working with, or in close proximity to ordance, (or employees possibly adjacent to) explosives and incendiary materials which involves potential injury such as laceration of hands, face, or arms of the employee engaged in the operation, irritation of the skin, minor burns and the like; minimal damage to immediate or adjacent work area or equipment being used. All operations involving, unloading, storage, and hauling of ordance, explosive, and incendiary ordnance material other than small arms ammunition. These differentials are only applicable to work that has been specifically designated by the agency for ordance, explosives, and incendiary material differential pay.

** UNIFORM ALLOWANCE **

If employees are required to wear uniforms in the performance of this contract (either by the terms of the Government contract, by the employer, by the state or local law, etc.), the cost of furnishing such uniforms and maintaining (by laundering or dry cleaning) such uniforms is an expense that may not be borne by an employee where such cost reduces the hourly rate below that required by the wage determination. The Department of Labor will accept payment in accordance with the following standards as compliance:

The contractor or subcontractor is required to furnish all employees with an adequate number of uniforms without cost or to reimburse employees for the actual cost of the uniforms. In addition, where uniform cleaning and maintenance is made the responsibility of the employee, all contractors and subcontractors subject to this wage determination shall (in the absence of a bona fide collective bargaining agreement providing for a different amount, or the furnishing of contrary affirmative proof as to the actual cost), reimburse all employees for such cleaning and maintenance at a rate of $3.35 per week (or $.67 cents per day). However, in those instances where the uniforms furnished are made of "wash and wear" materials, may be routinely washed and dried with other personal garments, and do not require any special treatment such as dry cleaning, daily washing, or commercial laundering in order to meet the cleanliness or appearance standards set by the terms of the Government contract, by the contractor, by law, or by the nature of the work, there is no requirement that employees be reimbursed for uniform maintenance costs.

The duties of employees under job titles listed are those described in the "Service Contract Act Directory of Occupations", Fifth Edition, April 2006, unless otherwise indicated. Copies of the Directory are available on the Internet. A links to the Directory may be found on the WHD home page at http://www.dol.gov/esa/whd/ or through the Wage Determinations On-Line (WDOL) Web site at http://wdol.gov/.

REQUEST FOR AUTHORIZATION OF ADDITIONAL CLASSIFICATION AND WAGE RATE {Standard Form 1444 (SF 1444)}

Conformance Process:

The contracting officer shall require that any class of service employee which is not listed herein and which is to be employed under the contract (i.e., the work to be performed is not performed by any classification listed in the wage determination), be classified by the contractor so as to provide a reasonable relationship (i.e., appropriate level of skill comparison) between such unlisted classifications and the classifications listed in the wage determination. Such conformed classes of employees shall be paid the monetary wages and furnished the fringe benefits as are determined. Such conforming process shall be initiated by the contractor prior to the performance of contract work by such unlisted class(es) of employees. The conformed classification, wage rate, and/or fringe benefits shall be retroactive to the commencement date of the contract. {See Section 4.6 (C)(vi)} When multiple wage determinations are included in a contract, a separate SF 1444

should be prepared for each wage determination to which a class(es) is to be conformed.

The process for preparing a conformance request is as follows:

1) When preparing the bid, the contractor identifies the need for a conformed occupation(s) and computes a proposed rate(s).

2) After contract award, the contractor prepares a written report listing in order proposed classification title(s), a Federal grade equivalency (FGE) for each proposed classification(s), job description(s), and rationale for proposed wage rate(s), including information regarding the agreement or disagreement of the authorized representative of the employees involved, or where there is no authorized representative, the employees themselves. This report should be submitted to the contracting officer no later than 30 days after such unlisted class(es) of employees performs any contract work.

3) The contracting officer reviews the proposed action and promptly submits a report of the action, together with the agency's recommendations and pertinent information including the position of the contractor and the employees, to the Wage and Hour Division, Employment Standards Administration, U.S. Department of Labor, for review. (See section 4.6(b)(2) of Regulations 29 CFR Part 4).

4) Within 30 days of receipt, the Wage and Hour Division approves, modifies, or disapproves the action via transmittal to the agency contracting officer, or notifies the contracting officer that additional time will be required to process the request.

5) The contracting officer transmits the Wage and Hour decision to the contractor.

6) The contractor informs the affected employees.

Information required by the Regulations must be submitted on SF 1444 or bond paper.

When preparing a conformance request, the "Service Contract Act Directory of Occupations" (the Directory) should be used to compare job definitions to insure that duties requested are not performed by a classification already listed in the wage determination. Remember, it is not the job title, but the required tasks that determine whether a class is included in an established wage determination. Conformances may not be used to artificially split, combine, or subdivide classifications listed in the wage determination.

GILA COUNTY ATTORNEY
Daisy Flores

Re: County Attorney's Office approval of IGA pursuant to A.R.S. § 11-952(D).

To whom it may concern:

The County Attorney's Office has reviewed the Intergovernmental Agreement attached to this agenda item and has determined that it is in its "proper form" and "is within the powers and authority granted under the laws of this state to such public agency or public procurement unit" pursuant to A.R.S. § A.R.S. § 11-952(D).

Explanation of the Gila County Attorney's Office Intergovernmental Agreement (IGA) Review

A.R.S. § 11-952(D) requires that

> every agreement or contract involving any public agency or public procurement unit of this state . . . before its execution, shall be submitted to the attorney for each such public agency or public procurement unit, who shall determine whether the agreement is in proper form and is within the powers and authority granted under the laws of this state to such public agency or public procurement unit.

In performing this review, the County Attorney's Office reviews IGAs to see that they are in "proper form" prior to their execution. "Proper form" means that the contract conforms to fundamental contract law, conforms to specific legislative requirements, and is within the powers and authority granted to the public agency. It does not mean that the County Attorney's Office approves of or supports the policy objectives contained in the IGA. That approval is solely the province of the public agency through its elected body.

Likewise, this approval is not a certification that the IGA has been properly executed. Proper execution can only be determined after all the entities entering into the IGA have taken legal action to approve the IGA. There is no statutory requirement for the County Attorney's Office to certify that IGAs are properly executed.

Nonetheless, it is imperative for each public agency to ensure that each IGA is properly executed because A.R.S. § 11-952(F) requires that "[a]ppropriate action … applicable to the governing bodies of the participating agencies approving or extending the duration of the … contract shall be necessary before any such agreement, contract or extension may be filed or become effective." This can be done by ensuring that the governing body gives the public proper notice of the meeting wherein action will be taken to approve the IGA, that the item is adequately described in the agenda accompanying the notice, and that the governing body takes such action. Any questions regarding whether the IGA has been properly executed may be directed to the County Attorney's Office.

Proper execution of IGAs is important because A.R.S. § 11-952(H) provides that "[p]ayment for services under this section shall not be made unless pursuant to a fully approved written contract." Additionally, A.R.S. § 11-952(I) provides that "[a] person who authorizes payment of any monies in violation of this section is liable for the monies paid plus twenty per cent of such amount and legal interest from the date of payment."

The public agency or department submitting the IGA for review has the responsibility to read and understand the IGA in order to completely understand its obligations under the IGA if it is ultimately approved by the public entity's board. This is because while the County Attorney's Office can approve the IGA as to form, the office may not have any idea whether the public agency has the capacity to actually comply with its contractual obligations. Also, the County Attorney's Office does not monitor IGA compliance. Hence the public entity or submitting department will need to be prepared to monitor their own compliance. A thorough knowledge of the provisions of the IGA will be necessary to monitor compliance.

Before determining whether an IGA contract "is in proper form," the County Attorney's Office will answer any questions or concerns the public agency has about the contract. It is the responsibility of the public agency or department submitting the IGA for review to ask any specific questions or address any concerns it has about the IGA to the County Attorney's Office at the same time they submit the IGA for review. Making such an inquiry also helps improve the County Attorney's Office review of the IGA because it will help focus the review on specific issues that are of greatest concern to the public agency. Failing to make such an inquiry when the agency does have issues or concerns will decrease the ability of the County Attorney's Office to meaningfully review the IGA.

ARF-1368 **Consent Agenda Item 4- E**

Regular BOS Meeting

Meeting Date: 08/07/2012

Submitted For:	Christine Rocha, Health Programs Manager	Submitted By:	Christine Rocha Health Programs Manager Health & Emergency Services Division
Department:	Health & Emergency Services Division	Division:	Health Services
Fiscal Year:	2012-2013	Budgeted?:	Yes
Contract Dates Begin & End:	July 1, 2012 through June 30,2013	Grant?:	Yes
Matching Requirement?:	No	Fund?:	Renewal

Information

Request/Subject

Amendment No. 3 to an Intergovernmental Agreement (Contract No. HG060003) with the Arizona Department of Health Services.

Background Information

The Gila County Department of Health (Prevention) has been providing tobacco education and prevention for the past fifteen years. The vision statement is for Gila County youth to be tobacco-free while protecting non-smokers (including children and adults) from environmental tobacco access to state-of-the-art cessation services.

Evaluation

This funding will allow the Gila County Department of Health (Prevention) the ability to continue to provide the tobacco free environments program. The program uses the following strategies: prevent initiation of tobacco use among youth, eliminate exposure to secondhand smoke and promote cessation services to help smokers quit, reduce one of the four leading causes of chronic disease death in Arizona through advancement of school health policies.

Conclusion

Without this funding Gila County would be unable to provide tobacco free education and support to Gila County residents.

Recommendation

It is the recommendation of the Director of Health & Emergency Services that the Board of Supervisors approve Amendment No. 3 to an Intergovernmental Agreement (Contract No. HG060003) with the Arizona Department of Health Services in the amount of $135,000 to extend tobacco free services from July 1, 2012, through June 30, 2013.

Suggested Motion

Approval of Amendment No. 3 to Intergovernmental Agreement (Contract No. HG060003) between the Arizona Department of Health Services and the Gila County Division of Health and Emergency Services in the amount of $135,000 to extend tobacco free services from July 1, 2012, through June 30, 2013.

Attachments

Amendment No. 3 to IGA No. HG060003

Original IGA No. HG060003

Revised Price Sheet

Revised Attachment A to Contract # HG060003

Legal Explanation

	INTERGOVERNMENTAL AGREEMENT (IGA) AMENDMENT		ARIZONA DEPARTMENT OF HEALTH SERVICES 1740 W. Adams, Room 303 Phoenix, Arizona 85007 (602) 542-1040 (602) 542-1741 Fax
	Contract No: HG060003	Amendment No. 3	Procurement Specialist Manuel Gonzales

Tobacco Education and Prevention Services

It is mutually agreed that the Intergovernmental Agreement referenced is amended, effective date of final signature unless otherwise specified, as follows:

1. Replace Price Sheet, Page Four (4) Amendment Two (2) with Price Sheet Page Two (2) Amendment Three (3).
2. Replace Attachment A - Action Plan FY 2012, Amendment Two (2), Page Five (5) through Eight (8), with Attachment A - Action Plan FY 2013, Amendment Three (3), Pages Three (3) through Six (6).

All other provisions of this agreement remain unchanged.

Gila County Division of Health and Community Services **Contractor Name**	**CONTRACTOR SIGNATURE** **Contractor Authorized Signature**
5515 S. Apache Avenue, Suite 100 **Address**	Tommie C. Martin **Printed Name**
Globe Arizona 85501 **City State Zip**	Chairman, Board of Supervisors **Title**
CONTRACTOR ATTORNEY SIGNATURE Pursuant to A.R.S. § 11-952, the undersigned public agency attorney has determined that this Intergovernmental Agreement is in proper form and is within the powers and authority granted under the laws of the State of Arizona **Signature** **Date**	This Intergovernmental Agreement Amendment shall be effective the date indicated. The Public Agency is hereby cautioned not to commence any billable work or provide any material, service or construction under this IGA until the IGA has been executed by an authorized ADHS signatory **State of Arizona** **Signed this _____ day of _____ 2012**
Bryan Chambers, Chief Deputy **Printed Name**	**Procurement Officer**
Attorney General Contract No. PIGA2012000344, which is an Agreement between public agencies, has been reviewed pursuant to A.R.S. § 11-952 by the undersigned Assistant Attorney General, who has determined that it is in proper form and is within the powers and authority granted under the laws of the State of Arizona. Signature Date Assistant Attorney General Printed Name:	

INTERGOVERNMENTAL AGREEMENT (IGA)

Contract No. HG060003

ARIZONA DEPARTMENT OF HEALTH SERVICES
1740 West Adams, Room 303
Phoenix, Arizona 85007
(602) 542-1040
(602) 542-1741 FAX

Project Title: Tobacco Education and Prevention Services

Begin Date: 07/01/2009

Geographic Service Area: Gila County

Termination Date: 06/30/2014

Arizona Department of Health Services has authority to contract for services specified herein in accordance with A R S §§ 11-951, 11-952, 36-104 and 36-132 The Contractor represents that it has authority to contract for the performance of the services provided herein pursuant to:

- [X] **Counties:** A.R.S. §§ 11-201, 11-951, 11-952 and 36-182.
- [ ] **Indian Tribes:** A.R.S. §§ 11-951, 11-952 and the rules and sovereign authority of the contracting Indian Nation.
- [ ] **School Districts:** A.R.S. §§ 11-951, 11-952, and 15-342.
- [ ] **City of Phoenix:** Chapter II, §§ 1 & 2, Charter, City of Phoenix.
- [ ] **City of Tempe:** Chapter 1, Article 1, §§ 1.01 & 1.03, Charter, City of Tempe.

Amendments signed by each of the parties and attached hereto are hereby adopted by reference as a part of this Contract, from the effective date of the Amendment, as if fully set out herein.

Arizona Transaction (Sales) Privilege: _____

Federal Employer Identification No: _____

Tax License No: _____

Contractor Name: Gila County Division of Health and Community Services

Address: 5515 S. Apache Ave. Suite 100
Globe, AZ 85501

FOR CLARIFICATION, CONTACT:

Name: Christine Rocha

Phone: (928) 402-8789

FAX No: (928) 425-0794

CONTRACTOR SIGNATURE:

The Contractor agrees to perform all the services set forth in the Agreement and Work Statement. In accordance with A.R.S. 35-391 06 and A R S 35-393 06, the Contractor hereby certifies that the Contractor does not have scrutinized business operations in Sudan or Iran.

Shirley Dawson 7/20/09
Signature of Person Authorized to Sign Date

Shirley Dawson, Chairman
Print Name and Title

Gila County
Board of Supervisors

This Contract shall henceforth be referred to as Contract No. HG060003 The Contractor is hereby cautioned not to commence any billable work or provide any material, service or construction under this contract until Contractor receives a fully executed copy of the contract

State of Arizona

Signed this 10th day of August, 2009

Christine Ruth
Procurement Officer

CONTRACTOR ATTORNEY SIGNATURE:

Pursuant to A.R.S. § 11-952, the undersigned Contractor's Attorney has determined that this Intergovernmental Agreement is in proper form and is within the powers and authority granted under the laws of Arizona.

7/7/9
Signature of Person Authorized to Sign Date

Bryan B. Chambers Civil Deputy County Attorney
Print Name and Title

Attorney General Contract, No. PIGA2009000344, which is an Agreement between public agencies, has been reviewed pursuant to A.R.S. § 11-952 by the undersigned Assistant Attorney General, who has determined that it is in the proper form and is within the powers granted under the laws of the State of Arizona to those parties to the Agreement represented by the Attorney General.

The Attorney General, BY:

8/5/9
Signature Date

Assistant Attorney General: Ron Johnson

RESERVED FOR USE BY THE SECRETARY OF STATE

No. 30979
Filed with the Secretary of State
Date Filed: 8/10/09

Ken Bennett
Secretary of State

By: KBenz

1. **Definition of Terms.** As used in this Contract, the terms listed below are defined as follows:

1.1 *"Attachment"* means any document attached to the Contract and incorporated into the Contract

1.2 *"ADHS"* means Arizona Department of Health Services.

1.3 *"Budget Term"* means the period of time for which the contract budget has been created and during which funds should be expended.

1.4 *"Change Order"* means a written order that is signed by a Procurement Officer and that directs the Contractor to make changes authorized by the Uniform Terms and Conditions of the Contract.

1.5 *"Contract"* means the combination of the Uniform and Special Terms and Conditions, the Specifications and Statement or Scope of Work, Attachments, Referenced Documents, any Contract Amendments and any terms applied by law.

1.6 *"Contract Amendment"* means a written document signed by the Procurement Officer and the Contractor that is issued for the purpose of making changes in the Contract.

1.7 *"Contractor"* means any person who has a Contract with the Arizona Department of Health Services.

1.8 *"Cost Reimbursement"* means a contract under which a contractor is reimbursed for costs, which are reasonable, allowable and allocable in accordance with the contract terms and approved by ADHS.

1.9 *"Days"* means calendar days unless otherwise specified.

1.10 *"Fixed Price"* establishes a set price per unit of service. The set price shall be based on costs, which are reasonable, allowable and allocable.

1.11 *"Gratuity"* means a payment, loan, subscription, advance, deposit of money, services, or anything of more than nominal value, present or promised, unless consideration of substantially equal or greater value is received

1.12 *"Materials"* unless otherwise stated herein, means all property, including but not limited to equipments, supplies, printing, insurance and leases of property.

1.13 *"Procurement Officer"* means the person duly authorized by the State to enter into and administer Contracts and make written determinations with respect to the Contract.

1.14 *"Purchase Order"* means a written document that is signed by a Procurement Officer, that requests a vendor to deliver described goods or services at a specific price and that, on delivery and acceptance of the goods or services by ADHS, becomes an obligation of the State.

1.15 *"Services"* means the furnishing of labor, time or effort by a Contractor or Subcontractor.

1.16 *"Subcontract"* means any contract, express or implied, between the Contractor and another party or between a subcontractor and another party delegating or assigning, in whole or in part, the making or furnishing of any material or any service required for the performance of this Contract.

1.17 *"State"* means the State of Arizona and/or the ADHS For purposes of this Contract, the term "State" shall not include the Contractor

2 **Contract Type.**

This Contract shall be Cost Reimbursement

3. **Contract Interpretation.**

3.1 Arizona Law. The law of Arizona applies to this Contract including, where applicable, the Uniform Commercial Code as adopted by the State of Arizona.

3.2 Implied Contract Terms. Each provision of law and any terms required by law to be in this Contract are a part of this Contract as if fully stated in it.

3.3 Contract Order of Precedence. In the event of a conflict in the provisions of the Contract, as accepted by the State and as they may be amended, the following shall prevail in the order set forth below:

3.3.1 Terms and Conditions;

3.3.2 Statement or Scope of Work;

3.3.3 Attachments;

3.3.4 Referenced Documents.

3.4 Relationship of Parties. The Contractor under this Contract is an independent Contractor. Neither party to this Contract shall be deemed to be the employee or agent of the other party to the Contract.

3.5 Severability. The provisions of this Contract are severable. Any term or condition deemed illegal or invalid shall not affect any other term or condition of the Contract

3.6 No Parole Evidence. This Contract is intended by the parties as a final and complete expression of their agreement. No course of prior dealings between the parties and no usage of the trade shall supplement or explain any terms used in this document.

3.7 No Waiver. Either party's failure to insist on strict performance of any term or condition of the Contract shall not be deemed a waiver of that term or condition even if the party accepting or acquiescing in the nonconforming performance knows of the nature of the performance and fails to object to it.

3.8 Headings. Headings are for organizational purposes only and shall not be interpreted as having legal significance or meaning.

4. **Contract Administration and Operation.**

4.1 Term. As indicated on the signature page of the Contract, the Contract shall be effective as of the Begin Date and shall remain effective until the Termination Date.

4.2 Contract Renewal. This Contract shall not bind, nor purport to bind, the State for any contractual commitment in excess of the original Contract period. The term of the Contract shall not exceed five years. However, if the original contract period is for less than five years, the State shall have the right, at its sole option, to renew the Contract, so long as the original Contract period together with the renewal periods does not exceed five years. If the State exercises such rights, all terms, conditions and provisions of the original Contract shall remain the same and apply during the renewal period with the exception of price and Scope of Work, which may be renegotiated.

4.3 New Budget Term. If a budget term has been completed in a multi-term Contract, the parties may agree to change the amount and type of funding to accommodate new circumstances in the next budget term. Any increase or decrease in funding at the time of the new budget term shall coincide with a change in the Scope of Work or change in cost of services as approved by the Arizona Department of Health Services.

4.4 Non-Discrimination. The Contractor shall comply with State Executive Order No. 99-4, as applicable, and all other applicable Federal and State non-discrimination laws, rules and regulations, including, but not limited to Title VII of the Civil Rights Act of 1964, as amended, the Age Discrimination in Employment Act of 1975, Federal Executive Order 11246, Sections 503 and 504 of the Rehabilitation Act of 1973, as amended, Title VI of the Civil Rights Act of 1964, as amended, the Americans with Disabilities Act of 1990 (Public Law 101-366), and all other acts required for compliance with the federal funding source.

4.5 Records and Audit. Under A.R.S. § 35-214 and A.R.S. § 35-215, the Contractor shall retain and shall contractually require each subcontractor to retain all data and other records ("records") relating to the acquisition and performance of the Contract for a period of five years after the completion of the Contract. All records shall be subject to inspection and audit by the State and where applicable the Federal Government at reasonable times. Upon request, the Contractor shall produce a legible copy of any or all such records.

4.6 Financial Management. For all contracts, the practices, procedures, and standards specified in and required by the Accounting and Auditing Procedures Manual for the ADHS funded programs shall be used by the Contractor in the management of contract funds and by the State when performing a contract audit. Funds collected by the Contractor in the form of fees, donations and/or charges for the delivery of these contract services shall be accounted for in a separate fund.

4.6.1 *Federal Funding*. Contractors receiving federal funds under this contract shall comply with the certified finance and compliance audit provision of the Office of Management and Budget (OMB) Circular A-133, if applicable. The federal financial assistance information shall be stated in a Change Order or Purchase Order.

4.6.2 *State Funding*. Contractors receiving state funds under this contract shall comply with the certified compliance provisions of A.R.S. § 35-181.03.

4.7 Inspection and Testing. The Contractor agrees to permit access, at reasonable times, to its facilities.

4.8 Notices. Notices to the Contractor required by this Contract shall be made by the State to the person indicated on the signature page by the Contractor, unless otherwise stated in the Contract. Notices to the State required by the Contract shall be made by the Contractor to an ADHS Procurement Officer, unless otherwise stated in the Contract. An authorized ADHS Procurement Officer and an authorized Contractor representative may change their respective person to whom notice shall be given by written notice, and an amendment to the Contract shall not be necessary.

4.9 Advertising and Promotion of Contract. The Contractor shall not advertise or publish information for commercial benefit concerning this Contract without the prior written approval of an ADHS Procurement Officer.

4.10 Property of the State.

4.10.1 *Equipment*. Except as provided below or otherwise agreed to by the parties, the title to any and all equipment acquired through the expenditure of funds received from the State shall remain the property of the State by and through the ADHS and, as such, shall remain under the sole direction, management and control of the ADHS. When this Contract is terminated, the disposition of all such property shall be determined by the ADHS. For Fixed Price contracts, when the Contractor provides the services/materials required by the contract, any and all equipment purchased by the Contractor remains the property of the Contractor. All purchases of equipment need to be reported to the ADHS Office of Inventory Control.

4.10.2 *Title and Rights to Materials*. As used in this section, the term "Materials" means all products created or produced by the Contractor under this Contract, including, but not limited to: written and electronic information, recordings, reports, research, research findings, conclusions, abstracts, results, software, data and any other intellectual property or deliverables created, prepared, or

received by the Contractor in performance of this Contract. Contractor acknowledges that all Materials are the property of the State by and through the ADHS and, as such, shall remain under the sole direction, management and control of the ADHS The Contractor is not entitled to a patent or copyright on these Materials and may not transfer a patent or copyright on them to any other person or entity To the extent any copyright in any Materials may originally vest in the Contractor, the Contractor hereby irrevocably transfers to the ADHS, for and on behalf of the State, all copyright ownership. The ADHS shall have full, complete and exclusive rights to reproduce, duplicate, adapt, distribute, display, disclose, publish, release and otherwise use all Materials. The Contractor shall not use or release these Materials without the prior written consent of the ADHS When this Contract is terminated, the disposition of all such Materials shall be determined by the ADHS. Further, the Contractor agrees to give recognition to the ADHS for its support of any program when releasing or publishing program Materials.

Notwithstanding the above, if the Contractor is a State agency, the following shall apply instead: It is the intention of ADHS and Contractor that all material and intellectual property developed under this Agreement be used and controlled in ways to produce the greatest benefit to the parties to this Contract and the citizens of the State of Arizona. As used in this paragraph, "Material" means all written and electronic information, recordings, reports, findings, research information, abstracts, results, software, data, discoveries, inventions, procedures and processes of services developed by the Contractor and any other materials created, prepared or received by the Contractor and subcontractors in performance of this Agreement. "Material" as used herein shall not include any pre-existing data, information, materials, discoveries, inventions or any form of intellectual property invented, created, developed or devised by Contractor (or its employees, subcontractors or agents) prior to the commencement of the services funded by this Agreement or that may result from Contractor's involvement in other service activities that are not funded by the Agreement

Title and exclusive copyright to all Material shall vest in the State of Arizona, subject to any rights reserved on behalf of the federal government. As State agencies and instrumentalities, both ADHS and Contractor shall have full, complete, perpetual, irrevocable and non-transferable rights to reproduce, duplicate, adapt, make derivative works, distribute, display, disclose, publish and otherwise use any and all Material. The Contractor's right to use Material shall include the following rights: the right to use the Material in connection with its internal, non-profit research and educational activities, the right to present at academic or professional meetings or symposia and the right to publish in journals, theses, dissertations or otherwise of Contractor's own choosing. Contractor agrees to provide ADHS with a right of review prior to any publication or public presentation of the Material, and ADHS shall be entitled to request the removal of its confidential information or any other content the disclosure of which would be contrary to the best interest of the State of Arizona. Neither party shall release confidential information to the public without the prior expressly written permission of the other, unless required by the State public records statutes or other law, including a court order. Each party agrees to give recognition to the other party in all public presentations or publications of any Material, when releasing or publishing them.

In addition, ADHS and Contractor agree that any and all Material shall be made freely available to the public to the extent it is in the best interest of the State. However, if either party wants to license or assign an intellectual property interest in the material to a third-party for monetary compensation, ADHS and Contractor agree to convene to determine the relevant issues of title, copyright, patent and distribution of revenue. In the event of a controversy as to whether the Material is being used for monetary compensation or in a way that interferes with the best interest of the state or ADHS, then the Arizona Department of Administration shall make the final decision. Notwithstanding the above, "monetary compensation' does not include compensation paid to an individual creator for traditional publications in academia (the copyrights to which are Employee-Excluded Works under ABOR Intellectual Property Policy Section 6-908C.4.), an honorarium or other reimbursement of expenses for an academic or professional presentation, or an unprofitable distribution of Material.

5. **Costs and Payments.**

5 1 Payments. Payments shall comply with the requirements of A R S Titles 35 and 41, net 30 days. Upon receipt and acceptance of goods or services, the Contractor shall submit a complete and accurate Contractor's Expenditure Report for payment from the State within thirty (30) days, as provided in the Accounting and Auditing Procedures Manual for the ADHS.

5.2 Recoupment of Contract Payments.

5.2.1 *Unearned Advanced Funds.* Any unearned State funds that have been advanced to the Contractor and remain in its possession at the end of each budget term, or at the time of termination of the Contract, shall be refunded to the ADHS within forty-five (45) days of the end of a budget term or of the time of termination.

5.2.2 *Contracted Services.* In a fixed price contract, if the number of services provided is less than the number of services for which the Contractor received compensation, funds to be returned to the ADHS shall be determined by the Contract price. Where the price is determined by cost per unit of service or material, the funds to be returned shall be determined by multiplying the unit of service cost by the number of services the Contractor did not provide during the Contract term. Where the price for a deliverable is fixed, but the deliverable has not been completed, the Contractor shall be paid a pro rata portion of the completed deliverable. In a cost reimbursement contract, the ADHS shall pay for any costs that the Contractor can document as having been paid by the Contractor and approved by ADHS. In addition, the Contractor will be paid its reasonable actual costs for work in progress as determined by Generally Accepted Accounting Procedures up to the date of contract termination.

5.2.3 *Refunds.* Within forty-five (45) days after the end of each budget term or of the time of termination of the Contract, the Contractor shall refund the greater of: i) the amount refundable in accordance with paragraph 4 2.1, Unearned Advanced Funds; or ii) the amount refundable in accordance with paragraph 5.2.2, Contracted Services.

5.2.4 *Unacceptable Expenditures.* The Contractor agrees to reimburse the ADHS for all Contract funds expended, which are determined by the ADHS not to have been disbursed by the Contractor in accordance with the terms of this Contract. The Contractor shall reimburse ADHS within 45 days of the determination of unacceptability.

5.3 Unit Costs/Rates or Fees. Unit costs/rates or fees shall be based on costs, which are determined by ADHS to be reasonable, allowable and allocable as outlined in the Accounting and Auditing Procedures Manual for the ADHS.

5.4 Applicable Taxes.

5.4.1 *State and Local Transaction Privilege Taxes.* The State of Arizona is subject to all applicable state and local transaction privilege taxes. Transaction privilege taxes apply to the sale and are the responsibility of the seller to remit. Failure to collect taxes from the buyer does not relieve the seller from its obligation to remit taxes.

5.4.2 *Tax Indemnification.* The Contractor and all subcontractors shall pay all federal, state and local taxes applicable to its operation and any persons employed by the Contractor. Contractor shall require all subcontractors to hold the State harmless from any responsibility for taxes, damages and interest, if applicable, contributions required under Federal, and/or state and local laws and regulations and any other costs, including transaction privilege taxes, unemployment compensation insurance, Social Security and Worker's Compensation.

5.4.3 *I.R.S. W9 Form.* In order to receive payment under any resulting Contract, the Contractor shall have a current I.R.S. W9 Form on file with the State of Arizona.

5.5 Availability of Funds for the Next Fiscal Year. Funds may not be presently available for performance under this Contract beyond the first year of the budget term or Contract term. The State may reduce payments or terminate this contract without further recourse, obligation or penalty in the event that insufficient funds are appropriated in the subsequent budget term The State shall not be liable for any purchases or Subcontracts entered into by the Contractor in anticipation of such funding The Procurement Officer shall have the discretion in determining the availability of funds.

5.6 Availability of Funds for the Current Contract Term. Should the State Legislature enter back into session and decrease the appropriations through line item or general fund reductions, or for any other reason these goods or services are not funded as determined by ADHS, the following actions may be taken by ADHS:

5.6.1 Accept a decrease in price offered by the Contractor;

5.6.2 Reduce the number of goods or units of service and reduce the payments accordingly;

5.6.3 Offer reductions in funding as an alternative to contract termination; or

5.6.4 Cancel the Contract.

6. **Contract Changes.**

6.1 Amendments, Purchase Orders and Change Orders. This Contract is issued under the authority of the Procurement Officer who signed this Contract. The Contract may be modified only through a Contract Amendment, Purchase Order and/or Change Order within the scope of the Contract, unless the change is administrative or otherwise permitted by the Special Terms and Conditions. Changes to the Contract, including the addition of work or materials, the revision of payment terms, or the substitution of work or materials, directed by an unauthorized State employee or made unilaterally by the Contractor are violations of the Contract and of applicable law. Such changes, including unauthorized Contract Amendments, Purchase Orders and/or Change Orders, shall be void and without effect, and the Contractor shall not be entitled to any claim under this Contract based on those changes.

6.2 Subcontracts. The Contractor shall not enter into any Subcontract under this Contract without the advance written approval of the Procurement Officer. The Subcontract shall incorporate by reference all material and applicable terms and conditions of this Contract

6.3 Assignments and Delegation. The Contractor shall not assign any right nor delegate any duty under this Contract without the prior written approval of the Procurement Officer. The State shall not unreasonably withhold approval.

7. **Risk and Liability.**

7.1 Risk of Loss. The Contractor shall bear all loss of conforming material covered under this Contract until received and accepted by authorized personnel at the location designated in the Purchase Order, Change Order or Contract. Mere receipt does not constitute final acceptance. The risk of loss for nonconforming materials shall remain with the Contractor regardless of receipt.

7 2 Mutual Indemnification. Each party (as "indemnitor") agrees to indemnify, defend and hold harmless the other party (as "indemnitee") from and against any and all claims, losses, liability, costs or expenses (including reasonable attorney's fees) (hereinafter collectively referred to as "claims") arising out of bodily injury of any person (including death) or property damage, but only to the extent that such claims, which result in vicarious/derivative liability to the indemnitee, are caused by the act, omission, negligence, misconduct, or other fault of the indemnitor, its officers, officials, agents, employees or volunteers.

7.3 Indemnification - Patent and Copyright. To the extent permitted by A.R.S. § 41-621 and A.R S. § 35-154, the Contractor shall indemnify and hold harmless the State against any liability, including costs and expenses, for infringement of any patent, trademark or copyright arising out of performance of the Contract or use by the State of materials furnished by or work performed under this Contract. The State shall

reasonably notify the Contractor of any claim for which it may be liable under this paragraph.

7.4 Force Majeure.

7.4.1 *Liability and Definition*. Except for payment of sums due, neither party shall be liable to the other nor deemed in default under this Contract if and to the extent that such party's performance of this Contract is prevented by reason of force majeure. The term "*force majeure*" means an occurrence that is beyond the control of the party affected and occurs without its fault or negligence. Without limiting the foregoing, force majeure includes acts of God; acts of the public enemy; acts of terrorism; war; riots; strikes; mobilization; labor disputes; civil disorders; fire; flood; lockouts; injunctions-interventions not caused by or resulting from the act or failure to act of the parties; failures or refusals to act by government authority not caused by or resulting from the act or failure to act of the parties; and other similar occurrences beyond the control of the party declaring force majeure, which such party is unable to prevent by exercising reasonable diligence.

7.4.2 *Exclusions*. Force Majeure shall not include the following occurrences:

7.4.2 1 Late delivery of Materials caused by congestion at a manufacturer's plant or elsewhere, or an oversold condition of the market;

7.4.2.2 Late performance by a subcontractor unless the delay arises out of a force majeure occurrence in accordance with this force majeure term and condition; or

7.4.2 3 Inability of either the Contractor or any subcontractor to acquire or maintain any required insurance, bonds, licenses or permits.

7.4.3 *Notice*. If either party is delayed at any time in the progress of the work by force majeure, the delayed party shall notify the other party in writing of such delay, as soon as is practicable and no later than the following working day of the commencement thereof, and shall specify the causes of such delay in such notice. Such notice shall be delivered or mailed certified-return receipt and shall make a specific reference to this article, thereby invoking its provisions. The delayed party shall cause such delay to cease as soon as practicable and shall notify the other party in writing when it has done so. The time of completion shall be extended by Contract Amendment for a period of time equal to the time that the results or effects of such delay prevent the delayed party from performing in accordance with this Contract.

7.4.4 *Default*. Any delay or failure in performance by either party hereto shall not constitute default hereunder or give rise to any claim for damages or loss of anticipated profits if, and to the extent that, such delay or failure is caused by force majeure.

7.5 Third Party Antitrust Violations. The Contractor assigns to the State any claim for overcharges resulting from antitrust violations to the extent that those violations concern materials or services supplied by third parties to the Contractor for or toward the fulfillment of this Contract.

8. **Description of Materials.** The following provisions shall apply to Materials only:

8.1 Liens. The Contractor agrees that the Materials supplied under this Contract are free of liens. In the event the Materials are not free of liens, Contractor shall pay to remove the lien and any associated damages or replace the Materials with Materials free of liens.

8.2 Quality. Unless otherwise modified elsewhere in these terms and conditions, the Contractor agrees that, for one year after acceptance by the State of the Materials, they shall be:

8.2.1 Of a quality to pass without objection in the Contract description;

8.2.2 Fit for the intended purposes for which the Materials are used;

8.2.3 Within the variations permitted by the Contract and are of even kind, quantity, and quality within each unit and among all units;

8.2.4 Adequately contained, packaged and marked as the Contract may require; and

8.2.5 Conform to the written promises or affirmations of fact made by the Contractor.

8.3 Inspection/Testing Subparagraphs 8.1 through 8.2 of this paragraph are not affected by inspection or testing of or payment for the Materials by the State.

8.4 Compliance With Applicable Laws. The Materials and services supplied under this Contract shall comply with all applicable federal, state and local laws, and the Contractor shall maintain all applicable license and permit requirements.

8.5 Survival of Rights and Obligations After Contract Expiration and Termination.

8.5.1 *Contractor's Representations.* All representations and warranties made by the Contractor under this Contract in paragraphs 7 and 8 shall survive the expiration or termination hereof. In addition, the parties hereto acknowledge that pursuant to A.R.S. § 12.510, except as provided in A.R.S. § 12-529, the State is not subject to or barred by any limitations of actions prescribed in A.R.S. Title 12, Chapter 5.

8.5.2 *Purchase Orders and Change Orders.* Unless otherwise directed in writing by the Procurement Officer, the Contractor shall fully perform and shall be obligated to comply with all Purchase Orders and Change Orders received by the Contractor prior to the expiration or termination hereof, including, without limitation, all Purchase Orders and Change Orders received prior to but not fully performed and satisfied at the expiration or termination of this Contract.

9. **State's Contractual Remedies.**

9.1 Right to Assurance. If the State, in good faith, has reason to believe that the Contractor does not intend to, or is unable to, perform or continue performing under this Contract, the Procurement Officer may demand in writing that the Contractor give a written assurance of intent to perform. Failure by the Contractor to provide written assurance within the number of Days specified in the demand may, at the State's option, be the basis for terminating the Contract.

9.2 Stop Work Order.

9.2.1 *Terms.* The State may, at any time, by written order to the Contractor, require the Contractor to stop all or any part of the work called for by this Contract for a period up to ninety (90) Days after the order is delivered to the Contractor, and for any further period to which the parties may agree. The order shall be specifically identified as a stop work order issued under this clause. Upon receipt of the order, the Contractor shall immediately comply with its terms and take all reasonable steps to minimize the incurrence of costs allocable to the work covered by the order during the period of work stoppage.

9.2.2 *Cancellation or Expiration.* If a stop work order issued under this clause is canceled or the period of the order or any extension expires, the Contractor shall resume work. The Procurement Officer shall make an equitable adjustment in the delivery schedule or Contract price, or both, and the Contract shall be amended in writing accordingly.

9.3 Non-exclusive Remedies. The rights and remedies of ADHS under this Contract are not exclusive, and ADHS is entitled to all rights and remedies available to it, including those under the Arizona Uniform Commercial Code and Arizona common law.

9.4 Right of Offset. The State shall be entitled to offset against any sums due the Contractor in any Contract with the State or damages assessed by the State because of the Contractor's non-conforming performance

or failure to perform this Contract. The right to offset may include, but is not limited to, a deduction from an unpaid balance and a collection against the bid and/or performance bonds. Any offset taken for damages assessed by the State shall represent a fair and reasonable amount for the actual damages and shall not be a penalty for non-performance.

10 **Contract Termination.**

10.1 Cancellation for Conflict of Interest Pursuant to A.R.S. § 38-511, the State may cancel this Contract within three (3) years after Contract execution without penalty or further obligation if any person significantly involved in initiating, negotiating, securing, drafting or creating the Contract on behalf of the State is, or becomes at any time while the Contract or an extension of the Contract is in effect, an employee of or a consultant to any other party to this Contract with respect to the subject matter of the Contract. The cancellation shall be effective when the Contractor receives written notice of the cancellation, unless the notice specifies a later time. If the Contractor is a political subdivision of the State, it may also cancel this Contract as provided in A R S. § 38-511

10.2 Gratuities. The State may, by written notice, terminate this Contract, in whole or in part, if the State determines that employment or a Gratuity was offered or made by the Contractor or a representative of the Contractor to any officer or employee of the State for the purpose of influencing the outcome of the procurement, securing the Contract or an Amendment to the Contract, or receiving favorable treatment concerning the Contract, including the making of any determination or decision about contract performance. The State, in addition to any other rights or remedies, shall be entitled to recover exemplary damages in the amount of three times the value of the Gratuity offered by the Contractor.

10.3 Suspension or Debarment. The State may, by written notice to the Contractor, immediately terminate this Contract if the State determines that the Contractor or its subcontractor has been debarred, suspended or otherwise lawfully prohibited from participating in any public procurement activity, including but not limited to, being disapproved as a subcontractor of any public procurement unit or other governmental body.

10.4 Termination Without Cause.

10.4.1 Both the State and the Contractor may terminate this Contract at any time with thirty (30) days notice in writing specifying the termination date. Such notices shall be given by personal delivery or by certified mail, return receipt requested.

10.4.2 If the Contractor terminates this Contract, any monies prepaid by the State, for which no service or benefit was received by the State, shall be refunded to the State within 5 days of the termination notice. In addition, if the Contractor terminates the Contract, the Contractor shall indemnify the State for any sanctions imposed by the funding source as a result of the Contractor's failure to complete the Contract.

10.4.3 If the State terminates this Contact pursuant to this Section, the State shall pay the Contractor the Contract price for all Services and Materials completed up to the date of termination. In a fixed price contract, the State shall pay the amount owed for the Services or Materials by multiplying the unit of service or item cost by the number of unpaid service units or items. In a cost reimbursement contract, the ADHS shall pay for any costs that the Contractor can document as having been paid by the Contractor and approved by ADHS. In addition, the Contractor will be paid its reasonable actual costs for work in progress as determined by GAAP up to the date of termination. Upon such termination, the Contractor shall deliver to the ADHS all deliverables completed. ADHS may require Contractor to negotiate the terms of any remaining deliverables still due.

10 5 Mutual Termination. This Contract may be terminated by mutual written agreement of the parties specifying the termination date and the terms for disposition of property and, as necessary, submission of required deliverables and payment therein.

10.6 Termination for Default. The State reserves the right to terminate the Contract in whole or in part due to the failure of the Contractor to comply with any material obligation, term or condition of the Contract, to acquire and maintain all required insurance policies, bonds, licenses and permits, or to make satisfactory progress in performing the Contract. In the event the ADHS terminates the Contract in whole or in part as provided in this paragraph, the ADHS may procure, upon such terms and in such manner as deemed appropriate, Services or Materials, similar to those terminated, and Contractor shall be liable to the ADHS for any excess costs incurred by the ADHS in obtaining such similar Services or Materials.

10.7 Continuation of Performance Through Termination. Upon receipt of the notice of termination and until the effective date of the notice of termination, the Contractor shall perform work consistent with the requirements of the Contract and, if applicable, in accordance with a written transition plan approved by the ADHS. If the Contract is terminated in part, the Contractor shall continue to perform the Contract to the extent not terminated. After receiving the notice of termination, the Contractor shall immediately notify all subcontractors, in writing, to stop work on the effective date of termination, and on the effective date of termination, the Contractor and subcontractors shall stop all work.

10.8 Disposition of Property. Upon termination of this Contract, all property of the State, as defined herein, shall be delivered to the ADHS upon demand.

11. **Arbitration.** Pursuant to A.R.S. § 12-1518, disputes under this Contract shall be resolved through the use of arbitration when the case or lawsuit is subject to mandatory arbitration pursuant to rules adopted under A.R.S. § 12-133.

12. **Communication.**

12.1 Program Report. When reports are required by the Contract, the Contractor shall provide them in the format approved by ADHS.

12.2 Information and Coordination. The State will provide information to the Contractor pertaining to activities that affect the Contractor's delivery of services, and the Contractor shall be responsible for coordinating their activities with the State's in such a manner as not to conflict or unnecessarily duplicate the State's activities. As the work of the Contractor progresses, advice and information on matters covered by the Contract shall be made available by the Contractor to the State throughout the effective period of the Contract.

13. **Client Grievances.** If applicable, the Contractor and its subcontractors shall use a procedure through which clients may present grievances about the operation of the program that result in the denial, suspension or reduction of services provided pursuant to this Contract and which is acceptable to and approved by the State.

14. **Sovereign Immunity.** Pursuant to A.R.S. § 41-621(O), the obtaining of insurance by the State shall not be a waiver of any sovereign immunity defense in the event of suit.

15. **Fingerprint and Certification Requirements/Juvenile Services.**

15.1 Paid and Unpaid Personnel. The Contractor shall ensure that all paid and unpaid personnel who are required or are allowed to provide Services directly to juveniles have obtained fingerprint clearance cards in accordance with A.R.S. § 41-1758 et. seq.

15.2 Costs. The Contractor shall assume the costs of fingerprint certifications and may charge these costs to its fingerprinted personnel.

16. **Administrative Changes.** The Procurement Officer, or authorized designee, reserves the right to correct any obvious clerical, typographical or grammatical errors, as well as errors in party contact information (collectively, "Administrative Changes"), prior to or after the final execution of a Contract or Contract Amendment. Administrative Changes subject to permissible corrections include: misspellings, grammar errors, incorrect addresses, incorrect Contract Amendment numbers, pagination and citation errors, mistakes in the labeling of the rate as either extended or unit, and calendar date errors that are illogical due to typographical error. The

Procurement Office shall subsequently send to the Contractor notice of corrections to administrative errors in a written confirmation letter with a copy of the corrected Administrative Change attached.

17. **Survival of Terms After Termination or Cancellation of Contract.** All applicable contract terms shall survive and apply after contract termination or cancellation to the extent necessary for Contractor to complete and for the ADHS to receive and accept any final deliverables that are due after the date of the termination or cancellation.

18. **Health Insurance Portability and Accountability Act of 1996 (HIPAA).** The Contractor warrants that it is familiar with the requirements of HIPAA and HIPAA's accompanying regulations and will comply with all applicable HIPAA requirements in the course of this contract. Contractor warrants that it will cooperate with the Arizona Department of Health Services (ADHS) in the course of performance of the contract so that both the ADHS and Contractor will be in compliance with HIPAA, including cooperation and coordination with the ADHS Privacy Officer and other compliance officials required by HIPAA and its regulations. Contractor will sign any documents that are reasonably necessary to keep the ADHS and Contractor in compliance with HIPAA, including, but not limited to, business associate agreements.

    If requested by the ADHS, Contractor agrees to sign the "Arizona Department of Health Services Pledge To Protect Confidential Information" and to abide by the statements addressing the creation, use and disclosure of confidential information, including information designated as protected health information and all other confidential or sensitive information as defined in policy. In addition, if requested, Contractor agrees to attend or participate in HIPAA training offered by the ADHS or to provide written verification that the Contractor has attended or participated in job related HIPAA training that is: (1) intended to make the Contractor proficient in HIPAA for purposes of performing the services required and (2) presented by a HIPAA Privacy Officer or other person or program knowledgeable and experienced in HIPAA and who has been approved by the ADHS HIPAA Compliance Officer.

19. **Compliance Requirements for A.R.S. § 41-4401, Government Procurement: E-Verify Requirement.**

    19.1 The Contractor warrants compliance with all Federal immigration laws and regulations relating to employees and warrants its compliance with Section A.R.S. § 23-214, Subsection A. (That subsection reads: "After December 31, 2007, every employer, after hiring an employee, shall verify the employment eligibility of the employee through the E-Verify program.)

    19.2 A breach of a warranty regarding compliance with immigration laws and regulations shall be deemed a material breach of the Contract and the Contractor may be subject to penalties up to and including termination of the Contract.

    19.3 Failure to comply with a State audit process to randomly verify the employment records of Contractors and subcontractors shall be deemed a material breach of the Contract and the Contractor may be subject to penalties up to and including termination of the Contract.

    19.4 The State Agency retains the legal right to inspect the papers of any employee who works on the Contract to ensure that the Contractor or subcontractor is complying with the warranty under paragraph 1.

20. **A.R.S. 35-393 and A.R.S. 35-391.** In accordance with A.R.S. 35-393 and A.R.S. 35-391, the Contractor shall not have scrutinized business operations in Iran or Sudan.

21. **Comments Welcome.** The ADHS Procurement Office periodically reviews the Uniform Terms and Conditions and welcomes any comments you may have. Please submit your comments to: ADHS Procurement Administrator, Arizona Department of Health Services, 1740 West Adams, Suite 303, Phoenix, Arizona, 85007.

1. **Background**

Tobacco use is the leading preventable cause of death and disease in the United States, contributing to more than 430,000 deaths annually. Tobacco control programs are designed ultimately to help reduce disease, disability and death related to tobacco use.

The mission of the Arizona Department of Health Services Bureau of Tobacco and Chronic Disease (ADHS-BTCD) is to work together to build individual, organizational and community capacities to reduce the impact of commercial tobacco abuse. This is accomplished through the development of quality programs and services, creation of strategic partnerships and collaborations, and elimination of tobacco related health disparities.

ADHS-BTCD engages statewide organizations, county health departments, community partners and Arizona Native American Tribes to conduct tobacco education and prevention programs, in order to accomplish these critical strategic goals:

1.1. Reduce Initiation of Tobacco Use among Youth;

1.2. Reduce Exposure to Secondhand Smoke;

1.3. Promote Smoking Cessation among Youth and Adults and Help Smokers Quit;

1.4. Identify and Eliminate Tobacco Related Disparities in Specific Population Groups;

1.5. Assist in the Prevention and Early Detection of Four Leading Tobacco-Related Causes of Death in Arizona;

1.6. Develop and Implement a Comprehensive Tobacco Control Communication Plan;

1.7. Conduct Surveillance and Evaluation; and

1.8. Develop and Promote Public Policies that Reduce the Impact of Commercial Tobacco Use.

2. **Purpose**

The ADHS-BTCD intends to establish an Intergovernmental Agreement with Gila County Tobacco Free Environments Program (TFE) to provide tobacco education and prevention services in Gila County.

3. **Tasks and Requirements**

The Contractor shall:

3.1 Adhere to the guidelines and principles of the initiatives set forth in *A Strategic Plan for a Tobacco Free Arizona* (http://www.tobaccofreearizona.com/reports/pdf/tfa_strategic-plan.pdf) that pertain to the services and activities identified in Scope of Work/Action Plan (Attachment A);

3.2 Perform the services and activities identified in the Scope of Work/Action Plan (Attachment A), to address the ADHS Strategic Plan goals:

Goal #1: Reduce Initiation of Tobacco Use among Youth,

Goal #2: Eliminate Exposure to Secondhand Smokers, and

Goal #3: Promote smoking Cessation among Youth and Adults and help Smokers Quit;

3.3 Integrate into tobacco education, information about the effects of chronic disease and specifically the four leading causes of death (cancer, heart disease, stroke, and pulmonary disease) among Arizona citizens as

it pertains to tobacco initiation and usage;

3.4 Develop tobacco control community-based initiatives, which work to build a comprehensive approach to asset mapping;

3.5 Collect and report to the ADHS-BTCD Research and Evaluation Team and ADHS-BTCD contracted evaluators, data relevant to key tobacco control outcomes as identified by the ADHS-BTCD Required evaluation processes and measures are defined, and shall be followed, according to the Contractor Evaluation Guidelines (Attachment B);

3.6 Adhere to the Partner Marketing, Media and Communications Guidelines (Attachment C);

3.7 Attend the following meetings in person, unless waived with approval from the ADHS-BTCD Program Director:

3.7.1 Quarterly County Partner Meetings,

3.7.2 Regional County Partner Meetings, and

3.7.3 County Partner Specific Meetings.

Dates, locations and times will be released by ADHS-BTCD no less than ten (10) business days prior to the actual meeting; and

3.8 Attend the following meetings in person or via teleconference, unless waived with approval from the ADHS-BTCD Program Director:

3.8.1 County Partner Updates Meetings,

3.8.2 Media/Marketing Updates Meetings, and

3.8.3 Community Network Development Meetings.

Teleconference meeting logistics will be released by ADHS-BTCD no less than five (5) business days prior to the actual meeting.

4. **Deliverables**

The Contractor shall submit the following to the ADHS-BTCD:

4.1 Information on educational activities utilizing the Event Reporting Form (http://www.azteppdata.org), due thirty (30) days after the event completion;

4.2 Contractor Expenditure Report (CER) (Attachment E, electronic version available upon request to ADHS), due fifteen (15) days after month end;

4.3 Quarterly Report (Attachment D) addressing the items listed in the Action Plan, due October 31st, January 30th, July 31st and April 30th of each year; and

4.4 Annual Report highlighting all activities for the year, in a one (1) to two (2) pages summary, due July 31st of each year

5. **Notices, Correspondence and Deliverables**

5.1 Notices, Correspondence and Deliverables from the Contractor to the ADHS shall be sent to:

Arizona Department of Health Services
Bureau of Tobacco and Chronic Disease
Attn: Todd Pearce, Program Director
150 N. 18th Ave, Suite 310
Phoenix, AZ 85007
Telephone: 602-364-0837
Facsimile: 602-364-0844
E-Mail: pearcet@azdhs.gov

5.2 Notices and Correspondence from the ADHS to the Contractor shall be sent to:

Gila County Division of Health and Community Services
Tobacco Free Environments Program
Attn: Christine Rocha
1400 E. Ash Street
Globe, AZ 85501
Telephone: (928) 425-3231, ext 8789
Facsimile: (928) 425-0794
E-Mail: crocha@co.gila.az.us

5.3 Payments from the ADHS to the Contractor shall be sent to:

Gila County Health Department
Attn: David Fletcher
1400 E. Ash Street
Globe, AZ 85501
Telephone: 928-402-8801
E-Mail: dfletcher@co.gila.az.us

Contract Number	INTERGOVERNMENTAL AGREEMENT PRICE SHEET
HG060003	

Effective July 1, 2009

Cost Reimbursement Line Items	Budget Amount
1 Personnel Services/Employee Related Expenses	$103,642
2. Professional & Outside Services	$635
3. Travel Expenses	$1,136
4. Other Operating Expense	$29,555
5. Capital Outlay Expense	$0
6. Other (Indirect Costs)	$5,032
Total Contract Amount (not to exceed)	$140,000

ITEMIZED SERVICE BUDGET (ISB) RESTRICTIONS:

A. The Contractor is authorized to transfer up to a maximum of 10% of the total Contract amount among the categorical line items. Transfers of funds are only allowed among funded line items as detailed in the original ISB. Transfers exceeding 10% of the contracted amount, or to a non-funded line item, shall require a Contract amendment.

B. Indirect Costs shall not exceed 15% of the combined total of Personnel Services and Employee Related Expenses as listed on the ISB. For more detailed information regarding indirect costs, refer to the ADHS Accounting and Auditing Procedures Manual for Contractors of ADHS Funded Programs. This manual is incorporated into this Contract by reference herein.

AUTHORIZATION FOR PROVISION OF SERVICES:

Authorization for purchase of services under this Contract shall be made only upon ADHS issuance of a Purchase Order that is signed by an authorized agent. The Purchase Order will indicate the Contract number and the dollar amount of funds authorized. The Contractor shall only be authorized to perform services up to the amount on the Purchase Order. ADHS shall not have any legal obligation to pay for services in excess of the amount indicated on the Purchase Order. No further obligation for payment shall exist on behalf of ADHS unless a) the Purchase Order is changed or modified with an official ADHS Procurement Change Order, and/or b) an additional Purchase Order is issued for purchase of services under this Contract.

Contract Number	INTERGOVERNMENTAL AGREEMENT ATTACHMENT A – SCOPE OF WORK/ACTION PLAN
HG060003	

Project Period: July 1st – June 30th of each year

Strategic Plan Goal 1: Reduce Initiation of Tobacco Use among Youth

Target Group	Activities/Services	Deliverables	Outcomes	Lead Person	Timeline	Measurement Tool
1. 4th grade students	Students will receive intensive services using Get Real About Tobacco curriculum	Get Real About Tobacco, delivered six (6) classes over six (6) weeks taught by the 4th grade teachers in ten (10) schools	Increase refusal skills awareness and reduce initiation of tobacco use among youth	Program Manager	Nov 1st - May 31st of each year	School Event Form
2. 5th grade students	Students will receive less intensive services to include Get Real about Tobacco Boosters	Get Real about Tobacco Boosters taught by peer educators, two (2) classes in ten (10) schools.	Increase refusal skills awareness and reduce initiation of tobacco use among youth	Program Manager	Nov 1st - May 31st of each year	School Event Form
3. 6th grade students	Students will receive intensive services using Toward No Tobacco (TNT)	TNT taught by peer educators in 10 schools (6 classes over 6 weeks).	Increase refusal skills awareness and reduce initiation of tobacco use among youth	Program Manager	Nov 1st - May 31st of each year	School Event Form
4. 7th grade students	Students will receive less intensive services to include TNT Boosters	TNT Boosters taught by peer educator, two (2) classes in ten (10) schools.	Increase refusal skills awareness and reduce initiation of tobacco use among youth	Program Manager	Nov 1st - May 31st of each year	School Event Form
5. Middle school and high-school students	Brief interventions	Brief interventions provided to approximately three thousand (3,000) students in seven (7) schools.	Increase refusal skills awareness and reduce initiation of tobacco use among youth	Program Manager	Oct 1st - May 31st of each year	School Event Form
6. Fourteen (14) – seventeen (17) year old youth	Youth will be recruited to participate in the compliance check program for the Attorney General's Office (AGO).	Assist the AGO in locating vendors selling tobacco products to minors.	Reduce the number of vendors selling tobacco products to minors.	Program Manager	July 1st - June 30th of each year	Contact with AG's Office via BTCD
7. Tobacco retailers	Pursue licensure of tobacco retailers	Work with the AGO office to pursue to the licensure of tobacco retailers.	Policies around the regulating and licensure of tobacco products	Program Manager	July 1st - June 30th of each year	Contact with AGO via BTCD

ADHS-BTCD collaborates with the University of Arizona Evaluation, Research and Development Unit (UA/ERDU) to coordinate program evaluation plans and activities across the state. In order to implement a quality evaluation plan of Arizona's comprehensive tobacco control program, ADHS-BTCD Contractors shall participate in the following activities:

1. Quarterly evaluation trainings conducted by UA/ERDU (at least one (1) staff member);

2. Quarterly BTCD Evaluation Working Group (staff member attendance requested by invitation):

   2.1 Collaborate on the development of evaluation instruments and reports, including review and feedback on report drafts, and

   2.2 Participate in discussions regarding the interpretation of report results;

3. Event form data collection:

   3.1 Participate in trainings to assure data quality,

   3.2 Adhere to online directions for completing and entering forms at (www.azteppdata.org), and

   3.3 Input events into web-based form within thirty (30) days of event completion;

4. Intensive school-based evaluation data collection:

   4.1 Participate in trainings to assure data quality,

   4.2 Develop feasible data collection processes at the local level,

   4.3 Adhere to guidelines for completing and mailing forms, and

   4.4 Mail forms within fourteen (14) days of class completion;

5. Cessation service data collection (Client Intake Form-See attachment)*:

   5.1 Participate in trainings to assure data quality,

   5.2 Adhere to guidelines for completing and mailing (or inputting) forms, and

   5.3 Mail forms within fourteen (14) days of cessation class completion;

6. Identification and implementation of additional program evaluation activities to fulfill individual project needs, as necessary:

   6.1 Evaluation activities (including surveys) shall be planned with input from ADHS-BTCD and UA/ERDU staff to assure consistency of methods and instruments, and

   6.2 Pilot projects shall have an evaluation plan in place before being implemented.

*Applicable only to contractors providing services in the relevant areas: community outreach, school-based prevention, and cessation respectively.

Strategic Plan Goal 2: Reduce Exposure to Secondhand Smoke

Target Group	Activities/Services	Deliverables	Outcomes	Lead Person	Timeline	Measurement Tool
1. Parents and other family members	Educational presentations to adults	Present information to adults regarding living a healthy lifestyle and the dangers of secondhand smoke.	Increased awareness among adults	Program Manager	July 1st - June 30th of each year	Event Form

Strategic Plan Goal 3: Promote Smoking Cessation among Youth and Adults and Help Tobacco Users Quit

Target Group	Activities/Services	Deliverables	Outcomes	Lead Person	Timeline	Measurement Tool
1. Youth who use tobacco	Provide TNT curricula to Gila County Juvenile Detention Center.	Twelve (12) weeks of TNT provided to individuals in the Gila County Juvenile Detention Center.	Promote smoking cessation among youth	Program Manager	Mar 1st - June 30th of each year	Event Form
2. Youth who have been caught using tobacco	Provide TEG & TAP curricula to the Gila County Teen Court and/or Schools.	TEG & TAP provided to individuals referred by the Gila County Teen Court and/or school administration officials.	Promote smoking cessation among youth who have been caught using tobacco products	Program Manager	Aug 1st - June 30th of each year	Event Form
3. Adult who use tobacco	Refer Gila County residents seeking cessation services to the Arizona Smokers' Help Line (ASHLine).	ASHLine referrals and materials provided to adults referred by TFE.	Promote smoking cessation provided by ASHLine	Program Manager	July 1st - June 30th of each year	Evaluation Unit
4. Adults who use tobacco	Offer tobacco use screenings and brief interventions as part of routine patient care in all healthcare settings.	ASHLine referrals and materials provided to adults referred by TFE.	Promote smoking cessation provided by ASHLine	Program Manager	July 1st - June 30th of each year	Evaluation Unit

1. **Overview**

The Arizona Department of Health Services Bureau of Tobacco and Chronic Disease (ADHS-BTCD) will provide marketing support to contractors by developing and implementing statewide marketing and media campaigns. In addition to ADHS-BTCD's overall campaigns, a representative from the ADHS-BTCD will work directly with each Partner to implement local efforts in support of the statewide marketing and media campaigns.

ADHS-BTCD will work with each Partner to develop an action plan for implementing local marketing efforts to support the statewide campaigns. Partner Marketing Action Plans may include local events to promote campaigns, targeted media purchases, targeted earned media efforts, youth coalition activities and participation in statewide events or activities. Additionally, ADHS-BTCD staff will provide technical assistance to help Partners implement locally elements of the statewide marketing and media campaigns.

ADHS-BTCD will have input/feedback sessions at live meetings and via telephone conference call to solicit input/feedback from Partners regarding its campaigns on an on-going basis. Partners will have the opportunity to participate in these sessions throughout the concept development, development and implementation phases of marketing and media campaigns.

2. **Overall Marketing Campaign Goals**

ADHS-BTCD Marketing Campaign Goals:

2.1 Provide consistent messaging statewide to support Community Network Development efforts by all Partners of ADHS-BTCD by offering Tobacco Free Arizona as one brand name under which all Partners statewide can operate, one message platform from which to communicate the messages of the statewide program, and one web location for the statewide tobacco program;

2.2 Develop and implement a statewide campaign to prevent youth ages 12-17 years old from initiating tobacco use;

2.3 Extend the reach of the statewide campaign to prevent youth ages 12-17 years old from initiating tobacco use by providing technical assistance and support for the development of youth coalitions statewide;

2.4 Develop and implement a statewide campaign to promote smoking cessation among adults, and young adults (age 18-24 years old) and drive potential quitters to utilize the services of Arizona's Smokers' Helpline (ASHLine);

2.5 Provide Partners with promotional material for purposes of promoting ASHLine to the public/potential clients of ASHLine statewide;

2.6 Develop a comprehensive tobacco education and chronic disease prevention message to increase awareness of prevention resources statewide and to increase referrals to Arizona's Smokers' Helpline (ASHLine) statewide;

2.7 Utilize a comprehensive tobacco education and chronic disease prevention message to increase awareness of prevention resources statewide and to increase referrals to Arizona's Smokers' Helpline (ASHLine) through worksite wellness visits statewide; and

2.8 Extend the reach of the all campaigns statewide via public relations and community outreach efforts in collaboration with County Partners and other statewide Community Partners.

3. **Local Efforts/Community Campaign Implementation**

3.1 ADHS-BTCD will work with each Partner to develop an action plan for implementing local marketing efforts to support the statewide campaigns. Additionally, ADHS-BTCD staff will provide technical assistance to help Partners implement elements of the statewide campaigns locally.

3.2 To ensure consistency of messaging and to ensure most economical economies of scale in production are achieved, ADHS-BTCD Marketing will provide all materials for implementing local marketing efforts to support its statewide campaigns. That is to say ADHS-BTCD will develop, produce and distribute:

3.2.1 Printed materials (brochures, flyers, posters);

3.2.2 Broadcast advertisements (television, in-theater, radio, web-based);

3.2.3 Press releases, fact sheets, and customizable "fill in the blank" templates for use by local Partners in local earned media/public relations efforts;

3.2.4 Internet advertisements (banner advertising, social media placements);

3.2.5 Web sites and collateral materials to drive the target audience to web sites;

3.2.6 Giveaway/promotional items/gifts;

3.2.7 Incentive items/prizes;

3.2.8 Text/e-generated messaging;

3.2.9 Outdoor boards, billboards, mall kiosks, bus/other outdoor kiosks, banners, display materials, booth materials/outdoor promotions;

3.2.10 Promotional material for purposes of promoting ASHLine to the public/potential clients;

3.2.11 Newsletters and e-generated messaging;

3.2.12 DVDs, CDs and/or media to be distributed of any of the above materials;

3.2.13 Materials, equipment, resources, needed to hold events to generate additional interest in marketing and media campaigns and to fuel youth coalition activities statewide; and

3.2.14 Partners of ADHS-BTCD will be provided with toolkits including quantities of all materials (where applicable) or on-line toolkits to locally promote all statewide marketing and media campaigns prior to the launch of any/all campaigns and throughout the duration of each campaign. Additional quantity of materials will be held in ADHS-BTCD inventory and will be available for ADHS-BTCD Partners to order via an email inventory system maintained by ADHS-BTCD Marketing.

3.3 In order to ensure consistency of messaging statewide, Partners of ADHS-BTCD shall not produce locally additional materials or alternate materials for the promotion of the statewide campaigns. Additionally, Partners of ADHS-BTCD shall not alter, change, recreate and/or reproduce materials provided to promote statewide campaigns. In order to ensure consistency of messaging statewide and to ensure that all material produced by Partners of ADHS-BTCD are in compliance with all ADHS Marketing and Logo Usage Policy Guidelines, ADHS-BTCD Partners shall not create and/or produce marketing, media, promotions or campaigns locally that are not created or produced in conjunction with ADHS-BTCD Marketing. Creation or production of any marketing, media, promotions or campaign outside of ADHS-BTCD Marketing needs to be routed to ADHS-BTCD for approval prior to funds being committed to the creation, production or implementation of any materials.

3.4 Any marketing, media, promotions or campaign materials submitted to ADHS-BTCD for approval will be submitted to the ADHS Marketing Review Committee Process for approval and will be subject to the approval of the ADHS Marketing Review Committee. Any marketing, media, promotions or campaign materials submitted to ADHS-BTCD for approval will be subject to the ADHS Logo Usage Policy and will be submitted to the ADHS Marketing Review Committee Process for approval of the usage of the ADHS-BTCD logo.

4. **Local Individual Efforts/Pilot Projects**

ADHS-BTCD will work with each Partner to develop an action plan for implementing local marketing efforts to support the statewide campaigns. Additionally, ADHS-BTCD will provide marketing, media and promotions support for specific pilot projects implemented statewide. Each pilot project will be assigned an ADHS-BTCD Marketing Team Member that will develop an action plan for marketing, media and promotions of each pilot project.

Contract Number	INTERGOVERNMENTAL AGREEMENT ATTACHMENT D – CONTRACTOR QUARTERLY REPORT
HG060003	

Contractor:
Contract Period:
Program Goal:
Reviewer:

1. Quarterly Report Submissions

Quarter	Date Due	Date Received	On-Time?	Date Reviewed	Feedback Sent
Quarter 1					
Quarter 2					
Quarter 3					

2. Provide comments regarding status of activities. (Who, What, When, Where, How, Why)

Goal 1:	
Objective 1:	
Program Status:	
BTCD Use Only	☐ Yes ☐ No Comments:
Objective 2:	
Program Status:	
BTCD Use Only	☐ Yes ☐ No Comments:
Objective 3:	
Program Status:	
BTCD Use Only	☐ Yes ☐ No Comments:
Goal 2:	
Objective 1:	
Program Status:	
BTCD Use Only	☐ Yes ☐ No Comments:
Goal 3:	
Objective 1:	
Program Status:	
BTCD Use Only	☐ Yes ☐ No Comments:
Goal 4:	
Objective 1:	
Program Status:	
BTCD Use Only	☐ Yes ☐ No Comments:
Objective 2:	
Program Status:	
BTCD Use Only	☐ Yes ☐ No Comments:

Goal 5:			
Objective 1:			
Program Status:			
BTCD Use Only	☐ Yes	☐ No	Comments:
Objective 2:			
Program Status:			
BTCD Use Only	☐ Yes	☐ No	Comments:
Goal 6:			
Objective 1:			
Program Status:			
BTCD Use Only	☐ Yes	☐ No	Comments:
Objective 2:			
Program Status:			
BTCD Use Only	☐ Yes	☐ No	Comments:
Goal 7:			
Objective 1:			
Program Status:			
BTCD Use Only	☐ Yes	☐ No	Comments:
Goal 8:			
Objective 1:			
Program Status:			
BTCD Use Only	☐ Yes	☐ No	Comments:

3. Any barriers/challenges prohibiting progress towards the Action Plan Objectives?

Barrier/Challenge	Recommended Solution/Action Taken

4. Any successes/highlights?

Success/Highlight Description

Quarterly Report Statement (For BTCD Office Use Only)	
Comments:	

Contract Number	INTERGOVERNMENTAL AGREEMENT ATTACHMENT E – CONTRACTOR EXPENDITURE REPORT
HG060003	

Arizona Department of Health Service
Accounting/Contracts
1740 W. Adams Street
Phoenix, Arizona 85007

CONTRACTOR'S EXPENDITURE REPORT

1. Contract Number _____ P.O. # _____
2. Contractor's Name _____
3. Title of Program _____
4. Reporting Period Covered: From _____ To _____

4A. ☐ Cost Reimbursement - Cumulative Actual Expenditures
☐ Fixed Price
4B. ☐ Periodic Report
☐ FINAL REPORT

Contractor's Detailed Statement of Expenditures and Fixed Price

5. COST REIMBURSEMENT (Actual Expenditures) A. Account Classification:		Approved Budget (a)	Prior Report Period Year to Date (b)	Current Reporting Period Expenditures (c)	Total Year to Date Expenditures (d)
Personal Services and ERE					
Professional and Outside Services					
Travel Expenses					
Other Operating Expense					
Capital Outlay Expense					
Other					
Total					

6. FIXED PRICE A. Type of Unit:	Rate per Unit (1)	Number of Units Provided this Reporting Period (2)	Total Funds Earned this Reporting Period (3)	Prior Report Period Year to Date Funds Earned (4)	Total Year to Date Funds Earned (5)
TOTAL					

ADHS USE ONLY

ADHS PROGRAM COORDINATOR CERTIF

☐ Performance satisfactory for payment
☐ Performance unsatisfactory, withhold payment
☐ No payment due

PROGRAM COORDINATOR SIGNATURE/DATE

THIS SECTION FOR ADHS ACCOUNTING USE ONLY

Total Expenditures or total Fixed Price _____
Adj (if required): _____
Less: Year to date payments _____
Adj (if required): _____
Net payment due: _____

Index	PCA	AY	Amount

7. CONTRACTOR CERTIFICATION

I certify that this report has been examined by me, and to the best of my knowledge and belief, the reported expenditures and fixed price information is valid, based upon our official accounting records (book of account) and consistent with the terms of the contract. It is also understood that the contract payments are calculated by the Department of Health Services based upon information

AUTHORIZED CONTRACTOR'S SIGNATURE/TITLE/DATE

ADHS/BFS/F-110 (Rev. 3/2002)
FIN-009

WHITE-ADHS ACCOUNTING * CANARY-ADHS PROGRAM COPY * PINK-ADHS ACCOUNTING COPY * GOLDENROD-CONTRACTOR'S COPY

	INTERGOVERNMENTAL AGREEMENT (IGA) AMENDMENT PRICE SHEET		ARIZONA DEPARTMENT OF HEALTH SERVICES 1740 W. Adams, Room 303 Phoenix, Arizona 85007 (602) 542-1040 (602) 542-1741 Fax
	Contract No: HG060003	Amendment No. 3	

Effective July, 2012

Cost Reimbursement Line Items	Budget Amount
1. Personnel Services/ERE	$119,428
2. Professional & Outside Services	635
3. Travel Expenses	1,984
4. Other Operating Expense	7,132
5. Capital Outlay Expense	0
6. Other (Indirect Costs)	5,821
Total Contract Amount (not to exceed)	$135,000

1. **ITEMIZED SERVICE BUDGET (ISB) RESTRICTIONS:**

   A. The Contractor is authorized to transfer up to a maximum of 10% of the total contract amount among the categorical line items. Transfers of funds are only allowed among funded line items as detailed in the original ISB. Transfers exceeding 10% of the contracted amount, or to a non-funded line item, shall require a contract amendment.

   B. Indirect Costs shall not exceed 15% of the combined total of Personnel Services and Employee Related Expenses as listed on the ISB. For more detailed information regarding indirect costs, refer to the ADHS Accounting and Auditing Procedures Manual for Contractors of ADHS Funded Programs. This manual is incorporated into this contract by reference herein.

2. **AUTHORIZATION FOR PROVISION OF SERVICES:**

   Authorization for purchase of services under this contract shall be made only upon ADHS issuance of a Purchase Order that is signed by an authorized agent. The Purchase Order will indicate the contract number and the dollar amount of funds authorized. The Contractor shall only be authorized to perform services up to the amount on the Purchase Order. ADHS shall not have any legal obligation to pay for services in excess of the amount indicated on the Purchase Order. No further obligation for payment shall exist on behalf of ADHS unless a) the Purchase Order is changed or modified with an official ADHS Procurement Change Order, and/or b) an additional Purchase Order is issued for purchase of services under this contract.

	INTERGOVERNMENTAL AGREEMENT (IGA) AMENDMENT ATTACHMENT A – ACTION PLAN		ARIZONA DEPARTMENT OF HEALTH SERVICES 1740 W. Adams, Room 303 Phoenix, Arizona 85007 (602) 542-1040 (602) 542-1741 Fax
	Contract No: HG060003	Amendment No. 3	Procurement Specialist Manuel Gonzales

Attachment A - Action Plan for FY 2013

County: Gila
Time Frame: July 1st – June 30th of each year
Vision Statement: For Gila County youth to be tobacco-free while protecting non-smokers (including children and adults) from environmental tobacco smoke. Create healthy lifestyles, including chronic disease prevention, and providing persons living in Gila County who wish to quit using tobacco access to state-of-the-art cessation services.

Goal: Eliminate Exposure to Secondhand Smoke	**Strategy is integrated with (check all that apply):** ☒ Tobacco Prevention Policy ☐ Chronic Disease Self -Management ☐ Tobacco Cessation Policy ☐ School Health Policy ☐ Other (i.e. increase community collaboration):
Strategy: By June 30, 2013, the Youth Coalition members will have decreased the number of parks that allow tobacco use measured through community surveys and enforcement protocols (i.e. appropriate signage).	

Agency Lead: Gila County **Partners:** Youth, schools, community members and community leaders	**Related policy change:** Public Parks/Play areas are smoke-free	**Related environmental change:** Engaging Youth in Policy Change and create a Smoke-Free Environment		**Status of Action Plan Items will appear in the Quarterly Report**			
What do you plan to do?	**Who will do the work?**	**What does success look like?**	**What non financial resources are needed?**	**Q1 Sept 30th**	**Q2 Dec 31st**	**Q3 March 30th**	**Q4 June 30th**
Action 1: Formulate survey that will capture community support for smoke-free parks.	Program Manager Community Health Assistants Youth Coalition	Hard-copy survey	Youth volunteers	X			
Action 2: Conduct survey face-to-face with business owners and community members.	Program Manager Community Health Assistants Youth Coalition	Collection of 600 community wide surveys	Youth volunteers	X			
Action 3: Compile survey results and address to community through media outlets.	Program Manager Community Health Assistants Youth Coalition	Newspaper & radio coverage	Youth volunteers		X		

Action 4: Presentation to Town & City Councils requesting an ordinance that prohibits smoking in city/town parks.	Program Manager Community Health Assistants Youth Coalition	Report findings to city & town councils and community members	Youth volunteers			X	
Action 5: Assist with implementation of policy by obtaining signage through Smoke-Free Arizona for City & Town to post and enforce in parks.	Program Manager Community Health Assistants Youth Coalition	Parks/Play areas are smoke-free	Youth volunteers				X

Goal: Prevent Initiation of Tobacco Use among Youth

Strategy: By June 30, 2013, the percent of retail tobacco outlets selling tobacco products to minors in Gila County will have decreased from the 2011 rate, as evidence in the Attorney General (AG's) tobacco sales compliance checks report findings.

Strategy is integrated with (check all that apply):
- ☒ Tobacco Prevention Policy
- ☐ Chronic Disease Self-Management
- ☐ Tobacco Cessation Policy
- ☐ School Health Policy
- ☐ Other (i.e. increase community collaboration):

Agency Lead: Gila County Partners: Youth, Attorney General's Office, Gila County Sherriff' Department	Related policy change: Enforcement of citations/fines related to underage tobacco sales	Related environmental change: Decrease in tobacco sales to youth		Status of Action Plan Items will appear in the Quarterly Report			
What do you plan to do?	**Who will do the work?**	**What does success look like?**	**What non financial resources are needed?**	**Q1 Sept 30th**	**Q2 Dec 31st**	**Q3 March 30th**	**Q4 June 30th**
Action 1: Recruit Youth at annual Youth Summit and Coalition Meetings	Program Manager Community Health Assistants Youth AG's Office	Youth will be trained during annual Youth Summit by the AG's Office	Youth Volunteers	X		X	
Action 2: Gila County will complete 2 compliance checks with the Attorney General's office to reduce tobacco sales to youth	Program Manager Community Health Assistants Youth AG's Office	Vendors will be in compliance	Youth Volunteers		X		X

	INTERGOVERNMENTAL AGREEMENT (IGA) AMENDMENT ATTACHMENT A – ACTION PLAN		ARIZONA DEPARTMENT OF HEALTH SERVICES 1740 W. Adams, Room 303 Phoenix, Arizona 85007 (602) 542-1040 (602) 542-1741 Fax
	Contract No: HG060003	Amendment No. 3	Procurement Specialist Manuel Gonzales

Goal: Promote Cessation Services to Help Smokers Quit

Strategy: By June 30, 2013, Gila County will outreach to healthcare organizations and will work with healthcare organizations to systematically refer to the Arizona Smokers Help Line (ASHLine) as measured by each organizations referral numbers in Web Quit.

Strategy is integrated with (check all that apply):
- ☐ Tobacco Prevention Policy
- ☐ Chronic Disease Self -Management
- ☒ Tobacco Cessation Policy
- ☐ School Health Policy
- ☐ Other (i.e. increase community collaboration):

Agency Lead: Gila County

Partners: ASHLine & Referral Development Coordinator, Businesses/Worksites

Related policy change: Health Care Cost Reductions

Related environmental change: Reduction in Chronic Disease

Status of Action Plan Items will appear in the Quarterly Report

What do you plan to do?	Who will do the work?	What does success look like?	What non financial resources are needed?	Q1 Sept 30th	Q2 Dec. 31st	Q3 March 30th	Q4 June 30th
Action 1: Identify healthcare organizations and appropriate person at each organization to talk to regarding ASH Line services	Program Manager ASHLine Referral Development Coordinator	Contacts Established	ASH Line Materials	X	X	X	X
Action 2: Schedule appointment to meet with provider Office Manager and do ASH Line Ask, Advise, Refer (A-A-R) in-service training with appropriate staff	Program Manager ASHLine Referral Development Coordinator	Staff trained on A-A-R	ASH Line printed material Presentations	X	X	X	X
Action 3: Refer adult tobacco users to ASHLine at events, presentations, and through brief interventions	Program Manager Community Health Assistants	ASHLine referral numbers increase for Gila County	ASH Line printed material	X	X	X	X

	INTERGOVERNMENTAL AGREEMENT (IGA) AMENDMENT ATTACHMENT A – ACTION PLAN		ARIZONA DEPARTMENT OF HEALTH SERVICES 1740 W. Adams, Room 303 Phoenix, Arizona 85007 (602) 542-1040 (602) 542-1741 Fax
	Contract No: HG060003	Amendment No. 3	Procurement Specialist Manuel Gonzales

Goal: Reduce the incidence of the four leading causes of chronic disease death in Arizona through advancement of school health policies.

Strategy: By June 30, 2013 cultivate schools to support and develop a network/group of individuals concerned about tobacco and 4 leading causes of chronic disease (heart, cancer, lung, stroke) prevention and health related issues in school setting and implementing a school health policy.

Strategy is integrated with (check all that apply):
- ☐ Tobacco Prevention Policy
- ☒ Chronic Disease Self -Management
- ☐ Tobacco Cessation Policy
- ☒ School Health Policy
- ☐ Other (i.e. increase community collaboration):

Agency Lead: Gila County **Partners:** School/School Districts, School Broads, Teachers, Parent, Teacher Organization (PTO), Parents, Students, Business Owner	**Related policy change:** School based policies related to tobacco and chronic disease prevention	**Related environmental change:** Healthy school environments		**Status of Action Plan Items will appear in the Quarterly Report**			
What do you plan to do?	**Who will do the work?**	**What does success look like?**	**What non financial resources are needed?**	**Q1 Sept 30th**	**Q2 Dec. 31st**	**Q3 March 30th**	**Q4 June 30th**
Action 1: Recruit members for Wellness Committees	Program Manager, Community Health Assistants	Established School Health Index (SHI) Committees in two schools	Volunteers/Committee Participants		X		
Action 2: Implementation of the School Health Index	Program Manager, Community Health Assistants	Completion of the SHI in targeted schools	Compilation of data & help with data interpretation and reporting				X

GILA COUNTY ATTORNEY
Daisy Flores

Re: County Attorney's Office approval of IGA pursuant to A.R.S. § 11-952(D).

To whom it may concern:

The County Attorney's Office has reviewed the Intergovernmental Agreement attached to this agenda item and has determined that it is in its "proper form" and "is within the powers and authority granted under the laws of this state to such public agency or public procurement unit" pursuant to A.R.S. § A.R.S. § 11-952(D).

Explanation of the Gila County Attorney's Office Intergovernmental Agreement (IGA) Review

A.R.S. § 11-952(D) requires that

> every agreement or contract involving any public agency or public procurement unit of this state . . . before its execution, shall be submitted to the attorney for each such public agency or public procurement unit, who shall determine whether the agreement is in proper form and is within the powers and authority granted under the laws of this state to such public agency or public procurement unit.

In performing this review, the County Attorney's Office reviews IGAs to see that they are in "proper form" prior to their execution. "Proper form" means that the contract conforms to fundamental contract law, conforms to specific legislative requirements, and is within the powers and authority granted to the public agency. It does not mean that the County Attorney's Office approves of or supports the policy objectives contained in the IGA. That approval is solely the province of the public agency through its elected body.

Likewise, this approval is not a certification that the IGA has been properly executed. Proper execution can only be determined after all the entities entering into the IGA have taken legal action to approve the IGA. There is no statutory requirement for the County Attorney's Office to certify that IGAs are properly executed.

Nonetheless, it is imperative for each public agency to ensure that each IGA is properly executed because A.R.S. § 11-952(F) requires that "[a]ppropriate action … applicable to the governing bodies of the participating agencies approving or extending the duration of the … contract shall be necessary before any such agreement, contract or extension may be filed or become effective." This can be done by ensuring that the governing body gives the public proper notice of the meeting wherein action will be taken to approve the IGA, that the item is adequately described in the agenda accompanying the notice, and that the governing body takes such action. Any questions regarding whether the IGA has been properly executed may be directed to the County Attorney's Office.

Proper execution of IGAs is important because A.R.S. § 11-952(H) provides that "[p]ayment for services under this section shall not be made unless pursuant to a fully approved written contract." Additionally, A.R.S. § 11-952(I) provides that "[a] person who authorizes payment of any monies in violation of this section is liable for the monies paid plus twenty per cent of such amount and legal interest from the date of payment."

The public agency or department submitting the IGA for review has the responsibility to read and understand the IGA in order to completely understand its obligations under the IGA if it is ultimately approved by the public entity's board. This is because while the County Attorney's Office can approve the IGA as to form, the office may not have any idea whether the public agency has the capacity to actually comply with its contractual obligations. Also, the County Attorney's Office does not monitor IGA compliance. Hence the public entity or submitting department will need to be prepared to monitor their own compliance. A thorough knowledge of the provisions of the IGA will be necessary to monitor compliance.

Before determining whether an IGA contract "is in proper form," the County Attorney's Office will answer any questions or concerns the public agency has about the contract. It is the responsibility of the public agency or department submitting the IGA for review to ask any specific questions or address any concerns it has about the IGA to the County Attorney's Office at the same time they submit the IGA for review. Making such an inquiry also helps improve the County Attorney's Office review of the IGA because it will help focus the review on specific issues that are of greatest concern to the public agency. Failing to make such an inquiry when the agency does have issues or concerns will decrease the ability of the County Attorney's Office to meaningfully review the IGA.

ARF-1361 **Consent Agenda Item 4- F**

Regular BOS Meeting

Meeting Date: 08/07/2012

Submitted For:	Malissa Buzan, CAP/Housing Services Manager	Submitted By:	Cecilia Bejarano, Executive Administrative Assistant, Community Services Division
Department:	Community Services Division	Division:	Comm. Action Program/Housing Servs.

Information

Request/Subject

OEP Contract No. EW-ESA-12-2182-02Y2 Weatherization Low Income Assistance Agreement

Background Information

For the past 10 years, the Gila County Division of Community Services, Weatherization Program, has applied for and received low income weatherization dollars to serve the low income population of Gila County. The Weatherization Program is the designated agency that provides weatherization services through the State of Arizona, Governor's Office of Energy Policy.

The purpose of the Weatherization Assistance Program is to install energy-efficient measures in the homes of income eligible persons, especially homes occupied by the elderly, persons with disabilities, and children. The recipients of this program also benefit by using less utilities, therefore saving money on their utility bills.

Evaluation

Funding from this contract will provide weatherization services to eligible citizens residing in Gila County that meet program income eligibility. Besides providing services to County residents, funding from this contract will also help many local contractors that are struggling to keep their business operating and keep staff employed during these uncertain economic times. All contractors utilized to provide services are required to become Building Pressure Institute certified.

Conclusion

By approving this Agreement, the Gila County Weatherization program will use unspent Department of Energy funds from Fiscal Year 2012 to continue to provide weatherization services to eligible citizens residing in Gila County.

Recommendation

The Community Action Program Housing Services Manager recommends that the Board of Supervisors approve this Contract.

Suggested Motion

Approval of a Weatherization Low Income Assistance Agreement (OEP Contract No. EW-ESA-12-2182-02Y2) between the State of Arizona, Governor's Office of Energy Policy, and the Gila County Division of Community Services, Housing Services, to continue to provide weatherization services to eligible citizens residing in Gila County, using the remaining unspent Department of Energy funds assigned to the Gila County Weatherization Program from Fiscal Year 2012; amount to be determined and contract is effective upon signature by both parties through June 30, 2013.

Attachments

OEP Contract No. EW-ESA-12-2182-02Y2

Legal Explanation

OEP CONTRACT NO. EW-ESA-12-2182-02Y2

WEATHERIZATION LOW-INCOME ASSISTANCE AGREEMENT

BETWEEN

STATE OF ARIZONA
GOVERNOR'S OFFICE OF ENERGY POLICY

and

GILA COUNTY

THIS Weatherization Low-Income Assistance Contractual Agreement ("AGREEMENT") is made, by and between the **State of Arizona, Governor's Office of Energy Policy ("OEP")**, located at 1700 West Washington, Suite 250, Phoenix, Arizona 85007, and **Gila County, Office of Community Services ("Contractor")**, located at 5515 South Apache Avenue, Suite 200, Globe, Arizona 85501.

WHEREAS, A.R.S. § 41-101.01 and Executive Order 2011-02 authorizes OEP to execute and administer contracts.

WHEREAS, A.R.S. §11-201 authorizes the Gila County Government to execute and administer contracts.

WHEREAS, OEP desires to engage the Contractor to render certain services, hereinafter described, in connection with a Weatherization services work program funded by the U.S. Department of Energy ("DOE") Low-Income Weatherization Assistance Program authorized under Title IV of the Energy Conservation and Production Act, as amended, which directs the Department of Energy to administer the Weatherization Assistance Program (42 U.S.C. 6861-6873).

In consideration of the representations and obligations hereunder the OEP and Contractor agree as follows:

I. PURPOSE OF THE AGREEMENT

Contractor shall implement weatherization services under the terms of this AGREEMENT. The purpose of the Weatherization Assistance Program is to install energy efficiency measures in the homes of income eligible persons, especially homes occupied by the elderly, persons with disabilities, and children. Funds are targeted to the most cost-effective efficiency measures, determined from an on-site energy audit of the building.

II. TERM OF CONTRACT

The effective date of this AGREEMENT is July 1, 2012 upon signature by both parties and continue through June 30, 2013, unless terminated, cancelled or extended as otherwise provided herein.

III. CONTRACT TYPE

Cost Reimbursement Sub-Grant.

IV. CONTRACT BUDGET

A. The DOE Budget for this AGREEMENT shall be the remaining unspent DOE funds assigned to this Contractor from Fiscal Year 2012. When the amount of Fiscal Year 2013 funding is determined, a line-item budget will be provided by email to the Contractor and this Budget shall be attached as Exhibit A to the AGREEMENT, and incorporated by reference.

B. Contractor agrees that it will use the funds solely and strictly for the purposes outlined in the Scope of Work.

V. SCOPE OF WORK

A. GENERAL REQUIREMENTS

Contractor shall implement weatherization services under the terms of this AGREEMENT in coordination with other federal, state and local weatherization related services or energy efficiency programs in order to preclude duplication of services generally and to optimize residential energy efficiency efforts within the Contractor's service delivery area.

B. SPECIFIC REQUIREMENTS

The Contractor shall perform the services under this AGREEMENT, in accordance with the then existing edition of the Program Requirements, incorporated herein by reference. The current edition is attached to this AGREEMENT as Exhibit B. Program Requirements may change and the Contractor will be notified by the OEP. Contractor shall perform the services in accordance with the then existing edition of the Program Requirements immediately upon notification by OEP or actual/constructive notice by any other means.

C. METHOD OF PAYMENT

1. Program expenses for this AGREEMENT are allowable beginning the effective date of this AGREEMENT.

2. All reimbursement of travel expenses shall be paid in accordance with the Contractor's travel policies, but shall not exceed the Domestic Per Diem rates allowed under the Federal Travel Management Policy, and the prevailing Federal standard mileage rates.

3. The OEP shall provide to Contractor master templates for the Payment Request Form and the Financial Report Form to use in requesting DOE funds during the term of the AGREEMENT.

4. The Contractor shall submit to the OEP no later than the twelfth (12th) working day of the following month (excluding state observed holidays) a monthly Payment Request Form, a Financial Report Form showing monthly and cumulative expenditures by line item according to Exhibit A, and a list of database client job numbers of completed and submitted jobs entered on the Weatherization Program Database website for the report month. All documents must indicate the contract name and number.

5. Reimbursement
   a. Reimbursement requests shall be submitted to the OEP on a Payment Request Form a minimum of once a month for services performed and work completed

to date. Include reporting month, dollar amount requested, original signature, and date. The *COMPLETED/SUBMITTED JOBS* check-box section of the Payment Request Form must be marked with appropriate choice and if applicable, attach documentation:

- *Completed/Submitted Jobs listing attached* (Attach list)
- *Completed/Submitted Jobs listing sent via email to* ebillings@az.gov (Send list by email to Evelyn Billings)
- *No Completed/Submitted jobs this month* (No list is required)

b. Reimbursement requests will be processed for payment upon determination that all reporting elements have met Weatherization contractual requirements. If reimbursement requests do not meet Weatherization contractual requirements, the OEP will provide a report listing areas out of compliance and remedies needed to bring the request into compliance.

D. REPORTS

1. Weatherization Program Database Website

a) For each dwelling unit completed, the Contractor shall input in the database the client information, house occupant information, and data on House Characteristics, Combustion Safety, Diagnostics and Work Performed to the fullest extent possible.

b) No later than the twelfth (12th) working day of the following month (excluding state observed holidays), each completed dwelling unit submitted for payment in the report month must have the job submitted as final on the website.

2. List of Client Jobs

a) A hard-copy client list, referencing the website client job numbers of completed jobs being requested for payment, must be submitted either by email to ebillings@az.gov or attached as a separate document to the Payment Request Form. As applicable, the appropriate check-box must be marked on the Payment Request Form utilizing the following choices:

- *Completed/Submitted Job listing attached*
- *Completed/Submitted Job listing sent via email to* ebillings@az.gov

b) If there are no dwelling units completed and submitted as final on the website for a billing month, the following box on the Payment Request Form should be checked:

- *No Completed/Submitted jobs this month*

3. Financial Report Form

a) The Financial Report shall show per line item current expenditures of the reporting period, and cumulative expenditures to date.

4. Monthly Detailed Expense Financial Reports

a) Detailed financial expense documentation reports generated by Contractor's accounting system that reflect Contractor's Weatherization budget

expenses must be submitted monthly with a Payment Request for the purpose of fiscal desk-audit monitoring.

5. Report Submittal Requirements

a) The Payment Request Form and Financial Report Form shall be mailed to the OEP no later than the twelfth (12th) working day of the month on or before 5:00 P.M. taking into consideration any State holiday.

b) Payment Request Forms must be submitted even if there was no production or fiscal activity during the report month.

c) Final reports shall be submitted no later than July 26, 2013.

E. **SUBMITTAL ADDRESS**

All Payment Request Forms and Report Forms must be directed to:

Governor's Office of Energy Policy
1700 W. Washington, Suite 250
Phoenix, Arizona 85007

F. **SERVICE TERRITORY**

Gila County, excluding tribal organizations.

G. **UNDUPLICATED UNIT GOAL**

Unduplicated unit goal: Contractor will be notified when Budget amount is determined.

VI. REGULATION REQUIREMENTS

A. As applicable, Contractor must follow conditions set forth by the U. S. Department of Energy, 10 C.F.R. pt. 440, and the OEP, in conjunction with the Arizona Department of Economic Security.

B. The average cost per dwelling unit for labor, materials and program support expenditures shall not exceed $6,769.00 using DOE program funds.

C. All measures must be determined to be eligible as cost-effective as set forth by the Weatherization Assistance Program.

D. Total expenditures on Health and Safety and Durability measures are subject to budget limitations.

VII. PROGRAM FINANCIAL ELIGIBILITY AND CERTIFICATION REQUIREMENTS

A. Eligible Population and Certification of Eligibility

Contractor is responsible to follow the current Arizona Department of Economic Security ("DES") Low-Income Home Energy Assistance Program ("LIHEAP") Policy Manual requirements for income eligibility up to 200% of Federal Poverty Guidelines as it pertains to the Weatherization Program. Copies of the Policy Manual will be provided by DES.

B. Income Eligibility

1. Applicants are eligible whose income is 200% of the Federal Poverty Guidelines income determined in accordance with criteria established by the Office of the Secretary, U.S. Department of Health and Human Services.

2. Households including members who have received cash assistance payments under Temporary Assistance for Needy Families (TANF) or Supplemental Security Income (SSI), are automatically eligible for Weatherization assistance.

C. Priority

Priority shall be given to identifying and providing weatherization assistance to the following households:

1. Elderly persons
2. Persons with disabilities
3. Families with children
4. High residential energy users and households with a high energy burden

VIII. PROHIBITION AGAINST WEATHERIZATION SERVICES

Dwelling Units

1. Dwelling units which are vacant or which are designated for acquisition or clearance by a federal, state, or local program within twelve (12) months from the date of scheduled weatherization shall not be provided Weatherization services under this AGREEMENT.
2. Dwelling units which are known to be for sale as evidenced by "For Sale" signs on the property, realtor listing and offering or classified advertisement, shall not be provided Weatherization services under this AGREEMENT.

IX. PRIOR WRITTEN APPROVAL REQUIREMENTS

Prior Written Approval from the OEP is required on the following:

1. All purchases of program vehicles or equipment over $4,999.
2. All purchase lease or lease-purchase of vehicles or equipment.
3. Weatherization training, program sessions, or workshops not sponsored by the OEP or DOE, and charged to Weatherization.
4. Adjustments to line items in the AGREEMENT budget.
5. Purchase of extended warranties for installed items on client homes.
6. Weatherization of all rental properties of four (4) or more units.
7. Replacement or repair of items in a rental unit that are the responsibility of the landlord under A.R.S. § 33-1324.
8. Specific references to written approval requirements listed in the latest edition of the Program Requirements, attached as Exhibit B.
9. Services for new additions or residences in varying stages of new construction or remodeling, or for garage/carport conversions in progress. Low-Income Weatherization services are for existing residential buildings only.
10. Homes that have been weatherized after September 30, 1994 and reported to the OEP for contract credit.

X. ELIGIBILITY FOR STATE OR LOCAL PUBLIC BENEFITS; DOCUMENTATION AND VIOLATIONS

Contractors providing services as an agent the State, shall ensure compliance with A.R.S. §1-502. A.R.S. §1-502 requires each person applying or receiving a public benefit to provide documented proof which demonstrates a lawful presence in the United States. The State shall reserve the right to conduct unscheduled, periodic process and documentation audits to ensure contractor compliance. All available contract remedies, up to and including termination may be taken for failure to comply with A.R.S. §1-502 in the delivery of services under this AGREEMENT.

XI. HISTORIC PRESERVATION:

Prior to the expenditure of Federal funds to alter any structure or site, the Contractor is required to comply with the requirements of Section 106 of the National Historic Preservation Act (NHPA), consistent with DOE's 2009 letter of delegation of authority regarding the NHPA. Section 106 applies to historic properties that are listed in or eligible for listing in the National Register of Historic Places. In order to fulfill the requirements of Section 106, the OEP and the State Historic Preservation Officer ("SHPO") have developed a Statewide Programmatic Agreement ("PA"). As long as the contractor adheres to a scope of work in conformance with this executed PA, the contractor need not perform any further Section 106 review. The Statewide Programmatic Agreement is available at: http://www.azenergy.gov/HistoricPreservation.aspx. Additional information is also available at the U.S. Department of Energy website: http://www1.eere.energy.gov/wip/historic_preservation.html.

XII. INVENTORY

The Contractor shall maintain a current list of all non-expendable inventory equipment, with an individual cost of $500 and over, which has a useful life of more than a year, and is available for use in Weatherization. This list shall include:

1. Description of inventory item
2. Manufacturer's serial number, model number, national stock number, or other identification number, and agency's unique tag number, if applicable.
3. Acquisition date
4. Locations, use, and condition of inventory
5. Unit acquisition cost and funding source
6. Disposition data - date and method of disposal

Contractor shall update the Program Equipment Inventory list at the end of the program year. Inventory list shall include any inventory acquisition, disposition, and condition changes during the program. Upon request by the OEP, a copy of the Contractor's Program Equipment Inventory list shall be provided.

XIII. PROPERTY

All inventories acquired by funds provided through the OEP AGREEMENT become program property. Title to inventory acquired and defined under the AGREEMENT may vest upon expiration of the contract provided all terms and conditions of the contract have been met. This is pursuant to Office of Management and Budget ("OMB") Circular A-102, and 10 C.F.R. § 600.232(A) (1996).

The Contractor shall indicate Weatherization Program ownership, maintain reasonable control, and be responsible for the proper care and maintenance of all inventories acquired through an AGREEMENT with the OEP. Equipment and vehicles no longer required for program operation shall be reported to the OEP prior to disposition. When the AGREEMENT is terminated, the disposition of all inventory acquired with AGREEMENT funds shall be determined as follows:

A. The OEP may allow continued use of program inventory provided that a new AGREEMENT is executed and the inventory continues to be used as originally intended.

B. The OEP may sell inventory to the Contractor, at fair market value, if the Contractor wishes to utilize the inventory for purposes other than for which it was acquired. Fair market value will be determined by the OEP.

C. The OEP may take possession of the inventory.

XIV. CLIENT FILE REQUIREMENTS

A. Separate File

A separate file shall be maintained for each household receiving Weatherization assistance under the terms of this AGREEMENT. The client file shall be retained by the Contractor for a minimum of five years and be available for inspection by representatives of the OEP with reasonable advance notification.

B. Program Application Form

A copy of the signed application form must be retained in the client file. Applicants qualifying for Weatherization will be notified of program eligibility.

C. Fuel Information Release Form

A fuel information release form signed by the applicant to allow the Contractor or the OEP to obtain a utility history for all metered fuels purchased by the applicant household. Refusal to sign fuel information release does not affect weatherization services available to applicants. If fuel information release is not signed by applicant, do not list utility account number on the Weatherization Program Database Website. Applicants who are on a "master metered" system are not required to sign the fuel information release form.

D. Rental Properties

Rental properties may be weatherized under the terms of this AGREEMENT. **Prior written approval is required by the OEP for all rental properties of four (4) or more units.** Written permission to perform itemized services must be obtained from the owner of the rental unit or the owner's authorized agent. Said written permission is to be retained along with such other agreements between the Contractor and the rental owner/agent, as part of the job record and client job file.

1. The owner of the rental property or the owner's agent shall agree in writing prior to performing the work, with a stipulation that the rental charge of said dwelling will not be increased for a minimum period of one year from the date of completion of Weatherization services as a consequence of the Weatherization investment.
2. The landlord is required to maintain fit premises pursuant to A.R.S. § 33-1324 (A)(4). The Contractor must obtain written permission from the OEP prior to repairing or replacing any items in the rental property the landlord is required to maintain.

SPECIAL TERMS AND CONDITIONS

XV. DUNS/CCR

The Contractor is required to provide a Dun and Bradstreet Data Universal Numbering System (DUNS) number for the fiscal agent; and proof of current registration in the Central Contractor Registration (CCR) database. Additionally, CCR registration must be maintained for the term of the AGREEMENT. The DUNS website is located at http://fedgov.dnb.com/webform. The CCR registration information may be found at https://www.bpn.gov/ccr/default.aspx.

XVI. FFATA REPORTING REQUIREMENTS

In compliance with the Federal Funding Accountability and Transparency Act of 2006 Reporting Requirements, (Pub. L. No. 109-282, as amended by Section 6205 (a) of Pub. L. No. 110-252),

the Contractor is required to provide information, as applicable, in Exhibit C, incorporated by reference and attached. The FFATA legislation requires information on federal awards (federal financial assistance and expenditures) be made available to the public via a single, searchable website, which is www.USASpending.gov

XVII. SINGLE AUDIT:

In compliance with the Single Audit Act of 1984 (Pub L. No. 98-502, as amended by Pub. L. No. 104-156, which is codified at 31 U.S.C. 7501-7507), grant sub-recipients organizations expending $500,000 or more of Federal funds from all sources during the organization's fiscal year, must have an annual audit conducted in accordance with OMB Circular A-133.

If your organization is subject to the annual audit requirements, then submit two copies of your organization's most recently completed audit in accordance with OMB Circular A-133 and the Management Letter, Findings and Questioned Costs to the OEP.

If your organization is not subject to OMB Circular A-133, submit two copies of the most recently completed audit of financial statements, with the Management Letter, Findings and Questioned Costs to the OEP.

If your organization does not have a recently completed audit, submit the most recently prepared financial statements including a Balance Sheet, Income Statement, and Statement of Cash Flows along with a description of the source of the documents to the OEP.

XVIII. MONITORING REQUIREMENTS:

Contractor acknowledges that requirements may change as governmental regulations change and assures that it will comply with applicable reporting and operational requirements related to the programmatic and financial performance of this grant.

XIX. AUDIT TRAILS:

Contractor shall maintain proper audit trails for all reports related to this AGREEMENT. The OEP reserves the right to review all program records, including fiscal and programmatic records.

XX. FUND MANAGEMENT:

The Contractor must maintain funds received under this AGREEMENT in separate ledger accounts and cannot mix these funds with other sources. Contractor must manage funds according to applicable federal regulations for administrative requirements, cost principles and audits.

The Contractor must maintain adequate business systems to comply with Federal requirements. The business systems that must be maintained are:

Financial Management
Procurement
Personnel
Property
Travel

A system is adequate if it is: 1) ***written***; 2) ***consistently followed*** – it applies in all similar circumstances; and 3) ***consistently applied*** – it applies to all sources of funds. The OEP reserves the right to review all business systems policies.

XXI. FISCAL RESPONSIBILITY

It is understood and agreed that the total amount of the funds used under this AGREEMENT shall be used for the project(s) outlined in this AGREEMENT. Therefore, should the project not be completed, be partially completed, or be completed at a lower cost than the original budget called for, the amount reimbursed to the Contractor shall be for only the amount of dollars actually spent by the Contractor. For any funds received under this AGREEMENT for which the expenditure is disallowed by an audit exception by the OEP, the State or Federal government, the Contractor shall reimburse said funds directly to the OEP immediately, but not later than fifteen (15) business days, exclusive of state holidays.

XXII. INDEMNIFICATION:

Each party (as "Indemnitor") agrees to indemnify, defend, and hold harmless the other party (as "Indemnitee") from and against any and all claims, losses, liability, costs, or expenses (including reasonable attorney's fees) (hereinafter collectively referred to as "Claims") arising out of bodily injury of any person (including death) or property damage, but only to the extent that such Claims which result in vicarious/derivative liability to the Indemnitee are caused by the act, omission, negligence, misconduct, or other fault of the Indemnitor, its officers, officials, agents, employees, or volunteers.

In addition, the Contractor shall cause its contractor(s) and subcontractors, if any, to indemnify, defend, save and hold harmless the State of Arizona, any jurisdiction or agency issuing any permits for any work arising out of this AGREEMENT, and their respective directors, officers, officials, agents, and employees (hereinafter referred to as "Indemnitee") from and against any and all claims, actions, liabilities, damages, losses, or expenses (including court costs, attorneys' fees, and costs of claim processing, investigation and litigation) (hereinafter referred to as "Claims") for bodily injury or personal injury (including death), or loss or damage to tangible or intangible property caused, or alleged to be caused, in whole or in part, by the negligent or willful acts or omissions of the other governmental entity's contractor or any of the directors, officers, agents, or employees or subcontractors of such contractor. This indemnity includes any claim or amount arising out of or recovered under the Workers' Compensation Law or arising out of the failure of such contractor to conform to any federal, state or local law, statute, ordinance, rule, regulation or court decree. It is the specific intention of the parties that the Indemnitee shall, in all instances, except for Claims arising solely from the negligent or willful acts or omissions of the Indemnitee, be indemnified by such contractor from and against any and all claims. It is agreed that such contractor will be responsible for primary loss investigation, defense and judgment costs where this indemnification is applicable.

XXIII. INSURANCE REQUIREMENTS

The Contractor and subcontractors shall procure and maintain until all of their obligations have been discharged, including any warranty periods under this AGREEMENT, are satisfied, insurance against claims for injury to persons or damage to property which may arise from or in connection with the performance of the work hereunder by the Contractor, his agents, representatives, employees or subcontractors.

The insurance requirements herein are minimum requirements for this AGREEMENT and in no way limit the indemnity covenants contained in this AGREEMENT. The State of Arizona in no way warrants that the minimum limits contained herein are sufficient to protect the Contractor from liabilities that might arise out of the performance of the work under this AGREEMENT by the Contractor, its agents, representatives, employees or subcontractors, and Contractor is free to purchase additional insurance.

A. MINIMUM SCOPE AND LIMITS OF INSURANCE

Contractor shall provide coverage with limits of liability not less than those stated below. Within ten (10) business days following notification of award, certificates of insurance must be submitted to the OEP, clearly stating the applicable contract number, effective date(s) of coverage, and limits of liability required pursuant to the AGREEMENT.

1. Commercial General Liability – Occurrence Form

Policy shall include bodily injury, property damage, personal injury and broad form contractual liability coverage.

• General Aggregate	$2,000,000
• Products – Completed Operations Aggregate	$1,000,000
• Personal and Advertising Injury	$1,000,000
• Blanket Contractual Liability – Written and Oral	$1,000,000
• Fire Legal Liability	$ 50,000
• Each Occurrence	$1,000,000

a. The policy shall be endorsed to include the following additional insured language: ***"The State of Arizona, its departments, agencies, boards, commissions, universities and its officers, officials, agents, and employees shall be named as additional insureds with respect to liability arising out of the activities performed by or on behalf of the Contractor".***

b. Policy shall contain a waiver of subrogation against the State of Arizona, its departments, agencies, boards, commissions, universities and its officers, officials, agents, and employees for losses arising from work performed by or on behalf of the Contractor.

2. Business Automobile Liability

Bodily Injury and Property Damage for any owned, hired, and/or non-owned vehicles used in the performance of this AGREEMENT.

Combined Single Limit (CSL)	$1,000,000

a. The policy shall be endorsed to include the following additional insured language: ***"The State of Arizona, its departments, agencies, boards, commissions, universities and its officers, officials, agents, and employees shall be named as additional insureds with respect to liability arising out of the activities performed by or on behalf of the Contractor, involving automobiles owned, leased, hired or borrowed by the Contractor".***

b. Policy shall contain a waiver of subrogation against the State of Arizona, its departments, agencies, boards, commissions, universities and its officers, officials, agents, and employees for losses arising from work performed by or on behalf of the Contractor.

3. Worker's Compensation and Employers' Liability

Worker's Compensation	Statutory

Employer's Liability

Each Accident	$ 500,000
Disease – Each Employee	$ 500,000
Disease – Policy Limit	$1,000,000

a. Policy shall contain a waiver of subrogation against the State of Arizona, its departments, agencies, boards, commissions, universities and its officers, officials, agents, and employees for losses arising from work performed by or on behalf of the Contractor.
b. This requirement shall not apply to: Separately, EACH CONTRACTOR or subcontractor exempt under A.R.S. §23-901, AND when such CONTRACTOR or subcontractor executes the appropriate waiver (Sole Proprietor/Independent Contractor) form.

4. Professional Liability (Errors and Omissions Liability)

Each Claim	$1,000,000
Annual Aggregate	$2,000,000

a. In the event that the professional liability insurance required by this AGREEMENT is written on a claims-made basis, Contractor warrants that any retroactive date under the policy shall precede the effective date of this AGREEMENT; and that either continuous coverage will be maintained or an extended discovery period will be exercised for a period of two (2) years beginning at the time work under this AGREEMENT is completed.
b. The policy shall cover professional misconduct or lack of ordinary skill for those positions defined in the Scope of Work of this AGREEMENT.

B. ADDITIONAL INSURANCE REQUIREMENTS

The policies shall include, or be endorsed to include, the following provisions:

1. The State of Arizona, its departments, agencies, boards, commissions, universities and its officers, officials, agents, and employees wherever additional insured status is required. Such additional insured shall be covered to the full limits of liability purchased by the Contractor, even if those limits of liability are in excess of those required by this AGREEMENT.
2. The Contractor's insurance coverage shall be primary insurance with respect to all other available sources.
3. Coverage provided by the Contractor shall not be limited to the liability assumed under the indemnification provisions of this AGREEMENT.

C. NOTICE OF CANCELLATION

With the exception of ten (10) day notice of cancellation for non-payment of premium, any changes material to compliance with this AGREEMENT in the insurance policies above shall require thirty (30) days written notice to the State of Arizona. Each insurance policy required by the insurance provisions of this AGREEMENT shall provide the required coverage and shall not be suspended, voided, canceled, or reduced in coverage or in limits. Such notice shall be sent directly to The Governor's Office of Energy Policy, Evelyn Billings, Grants Administrator, 1700

West Washington, Suite 250, Phoenix, AZ 85007 and shall be sent by certified mail, return receipt requested.

D. ACCEPTABILITY OF INSURERS

Insurance is to be placed with duly licensed or approved non-admitted insurers in the state of Arizona with an "A.M. Best" rating of not less than A- VII. The State of Arizona in no way warrants that the above-required minimum insurer rating is sufficient to protect the Contractor from potential insurer insolvency.

E. VERIFICATION OF COVERAGE

Contractor shall furnish the State of Arizona with certificates of insurance (ACORD form or equivalent approved by the State of Arizona) as required by this AGREEMENT. The certificates for each insurance policy are to be signed by a person authorized by that insurer to bind coverage on its behalf.

All certificates and endorsements are to be received and approved by the State of Arizona before work commences. Each insurance policy required by this AGREEMENT must be in effect at or prior to commencement of work under this AGREEMENT and remain in effect for the duration of the project. Failure to maintain the insurance policies as required by this AGREEMENT, or to provide evidence of renewal, is a material breach of contract.

All certificates required by this AGREEMENT shall be sent directly to Evelyn Billings, Grants Administrator, the Governor's Office of Energy Policy, 1700 W. Washington, Suite 250, Phoenix, AZ 85007. The State of Arizona project/contract number and project description shall be noted on the certificate of insurance. The State of Arizona reserves the right to require complete, certified copies of all insurance policies required by this AGREEMENT at any time. DO NOT SEND CERTIFICATES OF INSURANCE TO THE STATE OF ARIZONA'S RISK MANAGEMENT DIVISION.

F. SUBCONTRACTORS

Contractor's certificate(s) shall include all subcontractors as insureds under its policies or Contractor shall furnish to the State of Arizona separate certificates and endorsements for each subcontractor. All coverages for subcontractors shall be subject to the minimum requirements identified above.

G. APPROVAL

Any modification or variation from the insurance requirements in this AGREEMENT shall be made by the Department of Administration, Risk Management Division, whose decision shall be final. Such action will not require a formal AGREEMENT amendment, but may be made by administrative action.

H. EXCEPTIONS

In the event the Contractor or subcontractor(s) is/are a public entity, then the Insurance Requirements shall not apply. Such public entity shall provide a Certificate of Self-Insurance. If

the Contractor or subcontractor(s) is/are a State of Arizona agency, board, commission, or university, none of the above shall apply.

XXIV. POLLUTION OCCURRENCE INSURANCE

If working with pollutants or any remediation exposures are part of the project then Pollution Occurrence Insurance ("POI") shall be added as a part of, or an addendum to, general liability insurance by Contractor and all subcontractors. If Contractor or subcontractors do NOT obtain POI coverage and damage occurs because of not following all aspects of Lead Safe Weatherization, or there is disturbance to any other environmental pollutants, the cost to do remediation, clean up, relocation, medical expenses or any other resulting costs may not be charged to DOE Weatherization and must be covered by another funding mechanism.

XXV. AMENDMENTS OR MODIFICATIONS

A. This AGREEMENT may be modified only through a written Amendment within the scope of the AGREEMENT, except as provided in (B) and (C) of this section. Changes to the AGREEMENT, including the addition of work or materials, the revision of payment terms, or the substitution of work or materials, directed by a person who is not specifically authorized by OEP in writing or made unilaterally by the Contractor are violations of the AGREEMENT and of applicable law. Such changes, including unauthorized written Amendments shall be void and without effect, and the Contractor shall not be entitled to any claim under this AGREEMENT based on those changes.

B. Either party shall give written notice to the other party of the following alterations that do not require a written amendment:

1. Change of Address
2. Change of telephone number
3. Change in authorized signatory
4. Change in the name and/or related contact information of the person to whom notices are to be sent.

C. The following changes may be made within the six categories listed in Exhibit A - Budget:

1. Without limit, Administration Costs, Training and Technical Assistance, Financial Audit, Health and Safety, and Liability Insurance funds may be moved to Program Operations as long the Budget Total is not exceeded;
2. Up to 5% of Program Operations funds may be moved to either Financial Audit and/or Liability Insurance to cover the actual costs for a financial audit and/or liability insurance. Any of the aforementioned changes shall be made in consultation with and approved in writing by the Energy Office Weatherization Program Manager. These changes shall not require a formal contract amendment.

XXVI. SUBCONTRACTORS

The Contractor understands and agrees that no subcontract that the Contractor enters into shall in any way relieve the Contractor of any responsibility for performance of duties. Notwithstanding anything to the contrary contained in this AGREEMENT, the Contractor is not an employee or agent of the OEP. In the event the Contractor elects to retain a subcontractor, the Contractor

hereby agrees to hold harmless, indemnify and defend the OEP, the State of Arizona, their officers, agents, employees, successors and assigns for any payment, loss, claim or liability including but not limited to, attorney fees associated with any subcontract entered into by the Contractor.

XXVII. LOBBYING

The Contractor shall not pay for, influence, or seek to influence any officer or employee of the State of Arizona or the federal government if that action may have an impact, of any nature, on this AGREEMENT.

XXVIII. APPLICABLE LAW

All parties to this AGREEMENT shall comply with all applicable federal, state and local laws.

XXIX. LICENSES

Contractor shall maintain in current status all federal, state and local licenses and permits required for the operation of the business conducted by the Contractor.

XXX. NON-AVAILABILITY OF FUNDS

In accordance with A.R.S. §35-154, every payment obligation of the State under the AGREEMENT is conditioned upon the availability of funds appropriated or allocated for payment of such obligation. If funds are not allocated and available for the continuance of this AGREEMENT, this AGREEMENT may be terminated by the State at the end of the period for which funds are available. No liability shall accrue to the State in the event this provision is exercised, and the State shall not be obligated or liable for any future payments or for any damages as a result of termination under this paragraph, including purchases and/or contracts entered into by the Contractor in support of this AGREEMENT.

Funds are not presently available for performance under this AGREEMENT beyond the current fiscal year. No legal liability on the part of the OEP for any payment may arise for performance under this AGREEMENT beyond the current fiscal year until funds are made available for performance of this AGREEMENT.

XXXI. ARBITRATION

In accordance with A.R.S. §12-1518, the parties agree to resolve all disputes arising out of or relating to this AGREEMENT through arbitration, after exhausting applicable administrative review except as may be required by other applicable statutes.

XXXII. INVALIDITY OF PART OF THIS AGREEMENT

The parties agree that should any part of this AGREEMENT be held to be invalid or void, the remainder of the AGREEMENT shall remain in full force and effect and shall be binding upon the parties.

XXXIII. CANCELLATION FOR CONFLICT OF INTEREST

Pursuant to A.R.S. § 38-511, the state, its political subdivisions or any department or agency of either may, within three years after its execution, cancel any AGREEMENT, without penalty or further obligation, made by the state, its political subdivisions, or any of the departments or agencies of either if any person significantly involved in initiating, negotiating, securing, drafting or creating the AGREEMENT on behalf of the state, its political subdivisions or any of the departments or agencies of either is, at any time while the AGREEMENT or any extension of the AGREEMENT is in effect, an employee or agent of any other party to the AGREEMENT in any

capacity or a consultant to any other party of the AGREEMENT with respect to the subject matter of the AGREEMENT. A cancellation made pursuant to this provision shall be effective when the Contractor receives written notice of cancellation unless the notice specifies a later time.

XXXIV. AUDIT OF RECORDS

Pursuant to A.R.S. §§ 35-214 and 35-215, the Contractor shall retain and shall contractually require each subcontractor to retain all data, books, and other records ("records") relating to this AGREEMENT for a period of five years after completion of the AGREEMENT. All records shall be subject to inspection and audit by the State at reasonable times. Upon request, the Contractor shall produce the original of any or all such records. The Contractor shall require all subcontractors to abide by this provision during the term of the AGREEMENT.

XXXV. SUSPENSION OR DEBARMENT CERTIFICATION:

By signing the AGREEMENT, the Contractor certifies that the firm, business or person acting as a subcontractor has not been debarred, suspended or otherwise lawfully been precluded from participating in any public procurement activity with any federal, state or local government. Signing the AGREEMENT without disclosing all pertinent information about a debarment or suspension shall result in rejection of the AGREEMENT or cancellation of the AGREEMENT. The OEP may exercise any other remedy available by law.

XXXVI. TERMINATION:

The OEP reserves the right to terminate the AGREEMENT at any time, in whole or in part at any time when in the best interest of the State, without penalty or recourse. Upon receipt of the written notice, the Contractor shall stop all work, as directed in the notice, notify all subcontractors of the effective date of the termination and minimize all further costs to the State. In the event of termination pursuant to this paragraph, all documents, data, and reports prepared by the Contractor under the AGREEMENT shall become the property of and be delivered to the State upon demand. The Contractor shall be entitled to receive just and equitable compensation for work in progress, work completed and materials accepted before the effective date of termination. The cost principles and procedures provided in A.A.C. R2-7-701 shall apply.

XXXVII. NON-DISCRIMINATION

The Contractor shall comply with State Executive Order No. 2009-09 and all other applicable Federal and State laws, rules and regulations, including the Americans with Disabilities Act. The Contractor shall require all subcontractors to abide by this provision during the term of the AGREEMENT.

XXXVIII. THIRD PARTY ANTITRUST VIOLATIONS

The Contractor assigns to the OEP any claim for overcharges resulting from antitrust violations to the extent that such violations concern materials or services supplied by third parties to the Contractor toward fulfillment of this AGREEMENT.

XXXIX. PROGRAM REVIEW AND SITE VISITS

The OEP has the right to make site visits at reasonable intervals for purposes of review of project accomplishments and management control systems and to provide technical assistance, if required. Contractor will provide reasonable access to facilities, office space, resources, and assistance for the safety and convenience to the OEP representatives in the performance of their duties. All site visits and evaluations must be performed in a manner that does not unduly interfere with or delay the work.

XL. RIGHTS IN DATA

The OEP may duplicate, use, and disclose in any manner and for any purpose whatsoever, within the limits established by Federal and State laws and regulations, all information relating to this AGREEMENT.

XLI. HEALTH & SAFETY

The nature of the work to be performed under this AGREEMENT is inherently hazardous. In performance of work under this AGREEMENT, the Contractor shall satisfy all federal, state, and local statutes, regulations, ordinances, etc., regarding health and safety.

XLII. OCCUPATIONAL SAFETY AND HEALTH ACT ("OSHA") GUIDELINES

The Contractor or Subcontractor conducting activities to fulfill the requirements of the Weatherization Low-Income Assistance project must be in compliance with the requirements and shall operate with the guidelines set forth by OSHA (Pub. L. No. 91-596, which is codified at 29 U.S.C. 651-678).

XLIII. ENTIRE AGREEMENT

This AGREEMENT, including exhibits, attachments, and modifications approved in accordance herewith, shall constitute the entire AGREEMENT between the parties and supersede all understandings, oral or written.

XLIV. OFFSHORE PERFORMANCE OF WORK PROHIBITED

Any services that are described in the specifications or scope of work that directly serve the State of Arizona or its clients and involve access to secure or sensitive data or personal client data shall be performed within the defined territories of the United States. Unless specifically stated otherwise in the specifications, this paragraph does not apply to indirect or "overhead" services, redundant back-up services or services that are incidental to the performance of the AGREEMENT. This provision applies to work performed by subcontractors at all tiers. The Contractor shall require all subcontractors to abide by this provision during the term of the AGREEMENT. Contractor shall declare all anticipated offshore services to the OEP.

XLV. FEDERAL IMMIGRATION AND NATIONALITY ACT

The Contractor shall comply with all federal, state and local immigration laws and regulations relating to the immigration status of their employees during the term of the AGREEMENT. The State shall retain the right to perform random audits of the Contractor and subcontractor records or to inspect papers of any employee thereof to ensure compliance. Should the State determine that the Contractor and/or any subcontractors be found noncompliant, the State may pursue all remedies allowed by law, including, but not limited to: suspension of work, termination of the AGREEMENT for default and suspension and/or debarment of the Contractor. The Contractor shall require all subcontractors to abide by this provision during the term of the AGREEMENT.

XLVI. E-VERIFY REQUIREMENT

The contractor warrants compliance with all Federal immigration laws and regulations relating to employees and warrants its compliance with Section A.R.S. § 23-214, Subsection A. (That subsection reads: "After December 31, 2007, every employer, after hiring an employee, shall verify the employment eligibility of the employee through the E-Verify program.) A breach of a warranty regarding compliance with immigration laws and regulations shall be deemed a material breach of the AGREEMENT and the contractor may be subject to penalties up to and including termination of the AGREEMENT. Failure to comply with a State audit process to randomly verify the employment records of contractors and subcontractors shall be deemed a material breach of

the AGREEMENT and the contractor may be subject to penalties up to and including termination of the AGREEMENT. OEP retains the legal right to inspect the papers of any employee who works on the AGREEMENT to ensure that the contractor or subcontractor is complying with the warranty. The Contractor shall require all subcontractors to abide by this provision during the term of the AGREEMENT.

Questions about E-Verify see website below:
http://www.uscis.gov/portal/site/uscis/menuitem.eb1d4c2a3e5b9ac89243c6a7543f6d1a/?vgnextoid=6a0988e60a405110VgnVCM1000004718190aRCRD&vgnextchannel=6a0988e60a405110VgnVCM1000004718190aRCRD

XLVII. SCRUTINIZED BUSINESSES

In accordance with A.R.S. §35-391 and A.R.S. §35-393, Contractor certifies that the Contractor does not have scrutinized business operations in Sudan or Iran. The Contractor shall require all subcontractors to abide by this provision during the term of the AGREEMENT.

XLVIII. ATTORNEY FEES

In any litigation arising out of this Agreement, each party shall bear all of its own attorneys' fees in the case.

XLIX. NOTICES

All notices, demands, and communications provided for herein or made hereunder shall be delivered, or sent by certified mail, return receipt requested, addressed in each case as follows, until some other address shall have been designated in a written notice to the other party hereto given in like manner:

If to CONTRACTOR:
Gila County
Office of Community Services
5515 South Apache Avenue, Suite 200
Globe, AZ 85501

Contractual/Financial Contact
Malissa Buzan
Housing Services Manager
PHONE 928-402-8693
FAX 928-425-9468
EMAIL mbuzan@co.gila.az.us

Program/Technical Contact
Malissa Buzan
Housing Services Manager
PHONE 928-402-8693
FAX 928-425-9468
EMAIL mbuzan@co.gila.az.us

If to the OEP:
The Governor's Office of Energy Policy
1700 W. Washington, Suite 250
Phoenix, AZ 85007

Contractual/Financial Contact
Evelyn Billings
Grants Administrator
PHONE 602-771-1141
FAX 602-771-1203
EMAIL ebillings@az.gov

Program/Technical Contact
OEP Assigned Auditor

Each notice shall be deemed to have been given or made when so delivered or mailed. Notification of change shall be delivered to the OEP and Contractor within ten (10) days of any change affecting this provision.

IN WITNESS WHEREFORE, the parties hereto have executed this AGREEMENT.

STATE OF ARIZONA
GOVERNOR'S OFFICE OF ENERGY POLICY

By _____ **Date:** 7/2/12
Leisa B. Brug
Director
Or Authorized Signatory

_____ **Date:** 7/2/12
Travis Price
Compliance, Finance & Procurement Manager
Office of the Governor

GILA COUNTY

_____ **Date:** _____
Board of Supervisors
Chairman

Tommie C. Martin
Printed name

Chief Deputy County Attorney

_____
Signature Date

Bryan B. Chambers
Printed name

EXHIBIT B

WEATHERIZATION

PROGRAM REQUIREMENTS

JULY 1, 2012
EDITION

Index

INSTALLATION MEASURES 1
ENERGY AUDIT PROCEDURE 1
COST EFFECTIVENESS PROCEDURE 1
CLIMATE ZONES 2
FUEL SWITCHING 2
DOE Approved Priority Lists 2
Assumptions for Block Houses: 3
Arizona Block Housing Priority List – Zones 2 (Yuma, Phoenix) 3
Arizona Block Housing Priority List – Zone 3 (Safford, Sierra Vista) 4
Arizona Block Housing Priority List – Zones 4 and 5 (Prescott, Flagstaff) 5
Assumptions for Frame Built Houses: 7
Arizona Frame Housing Priority List – Zones 2(Yuma, Phoenix) 7
Arizona Frame Housing Priority List – Zones 3 (Safford, Sierra Vista) 8
Arizona Frame Housing Priority List – Zones 4 and 5 (Prescott, Flagstaff) 10
Mobile Home Assumptions: 12
Zone 2 MH (Phoenix, Yuma) 12
Zone 3 MH (Safford, Sierra Vista) 13
Zone 4 & 5 MH (Prescott, Flagstaff) 15
GENERAL WASTE HEAT ITEMS 16
COMBUSTION SAFETY AND CARBON MONOXIDE PROCEDURES 18
HVAC EQUIPMENT AND DISTRIBUTION INSTALLATION/REPAIR POLICY 19
INSULATION STANDARDS 21
RENEWABLES 22
FINAL INSPECTION REQUIREMENTS 22
HEALTH AND SAFETY PLAN 23
Deferrals 34
REFRIGERATOR REPLACEMENT POLICY 35

INSTALLATION MEASURES

All materials/measures installed shall be justified utilizing the Energy Audit Procedures established by the Governor's Office of Energy Policy(OEP).

ENERGY AUDIT PROCEDURE

The Weatherization Assistance Program (WAP) Energy Audit Procedure is to be used by all sub-grantees to gather record and analyze data on structures. This data is to be used to deliver weatherization materials/measures in a fashion that protects the health and safety of the client, increases the durability of the structure, increases the comfort of the client and reduces the energy cost to the client in a cost effective manner.

The following audit activities must be completed on all homes utilizing WAP funds.

A site audit is to be completed that records all of the relevant data on the structure that is needed to perform cost effectiveness tests.

The Cost Effectiveness Procedure must be followed to determine cost effectiveness of potential weatherization materials/measures.

The Pressure Diagnostic Procedure must be completed and the findings documented following the Reporting procedures.

A health and safety audit of the structures must be completed and the findings documented following the Reporting procedures.

A final inspection of the structure must be completed and findings documented following the Final Inspection Procedures.

COST EFFECTIVENESS PROCEDURE

WAP has incorporated a performance-based energy audit procedure that focuses on optimizing investment in energy efficiency through a systems approach. To enable the WAP program to optimize the investment in energy efficiency, the following requirements have been established for the audit procedure:

The energy audit procedure must determine that each weatherization material/measure is cost effective by ensuring the savings-to-investment ratio (SIR) is greater or equal to one.

The energy audit procedure must assign priorities among weatherization materials/measures in descending order of SIR and must account for interactions between architectural and mechanical measures.

Subgrantees have the option to utilize the DOE approved priority list for their climate zone and building type or utilize a site specific REM Design to create a new list of measure that will replace the DOE approved priority list. If a REM design is conducted, it is expected that all measures listed on the DOE approved priority list will be meet in addition to any other measures for which the REM Design is being conducted for.

The energy audit procedure must ensure that the overall SIR for the entire package of materials/measures, including the cost of incidental repairs, is greater or equal to one. Incidental repairs are only allowed if they are necessary to make the installation of weatherization materials effective.

Funds spent to abate energy related health and safety hazards do not need to be included in the preceding requirements. Funds can be spent to eliminate health and safety hazards when the elimination of the hazard is necessary before or because of the installation of weatherization materials.

Written authorization must be received from the OEP before the installation of measures/materials that do not meet the Cost Effectiveness or Health and Safety Requirements established by the WAP program.

To determine the cost effectiveness of weatherization materials/measures, the contractor must use a computer audit approved by the OEP or an appropriate priority list for homes that meet the criteria contained in the list.

CLIMATE ZONES

Arizona Climate Zones used for the Cost Effective Priority Lists are the International Energy Conservation Code (IECC) 2009and can be found at http://energycode.pnl.gov/EnergyCodeReqs/?state=Arizona

FUEL SWITCHING

The Weatherization Assistance Program does not permit the general practice of fuel switching when replacing heating, cooling or water heating equipment. The changing or converting equipment using one fuel source to another will be considered on a limited case-by-case basis only.

Written authorization must be received from the OEP prior to changing or converting equipment using one fuel source to another.

DOE Approved Priority Lists

Current Priority list was approved by DOE in September 2011

A computer audit is required if:
There are potential cost-effective energy upgrades to the house that are not listed on the priority list
There are not sufficient funds to complete all the measures; including energy related health and safety measures and other energy related repairs.
Energy related incidental repairs of more than $100 are included with the energy upgrades.
It is expected that if a site specific computer audit is conducted, that the measures listed for the respected climate zone and building type are modeled with any additional measure and that the savings to investment report is run ranking all measures by SIR from greatest return to lowest.

Assumptions for Block Houses:
Pre and Post blower door = 2000 CFM @ 50 Pa
Uninsulated block walls U-value = 0.371
1000 Square Feet
15% Glazing
Single Pane, aluminum Windows U = 1.13 SHGC = 0.70

Arizona Block Housing Priority List – Zones 2 (Yuma, Phoenix)

1. Air Sealing

Primary Heating Type	Maximum Cost of 100 CFM50 Reduction ($)
Propane	$45
Gas	$25
Electric Heat Pump	$25

2. Attic insulation to R-30
    a. If R-19 or less existing
3. CFLs
    a. If existing lighting is incandescent bulb in use for 2 hours per day or more
    b. Limit of 8 CFLs per client
4. Solar Screens
    a. Not to exceed $5.00 per square foot
5. Duct Sealing and Insulation

Primary Heating Type	Maximum Cost of 100 CFM50 Reduction in duct leakage ($)
Natural Gas and Propane with AC	$400
Electric Heat Pump	$340

6. Refrigerator Replacement

Annual kWh/yr Existing Unit	Annual kWh/yr of New Refrigerator		
	400 kWh/yr	500 kWh/yr	600 kWh/yr
800	$525	$393	$262
850	$590	$459	$328
900	$656	$525	$393
950	$722	$590	$459
1000	$787	$656	$525
1100	$919	$787	$656
1200+	$1,050	$919	$787

7. Install heat pump water heater
    a. If there is an existing electric water heat
    b. Cost not to exceed $1900
    c. Existing System EF<=0.90
    d. EF >= 2.4
    e. Dwelling must not contain an electric resistance furnace if water heater is to be put into conditioned space
    f. 4 or more residents

Arizona Block Housing Priority List – Zone 3 (Safford, Sierra Vista)

1. Air Sealing

Primary Heating Type	Maximum Cost of 100 CFM50 Reduction ($)
Propane	$70
Gas	$45
Electric Heat Pump	$45

2. Attic insulation to R-30
    a. If R-19 or less existing
3. CFLs
    a. If existing lighting is incandescent bulb in use for 2 hours per day or more
    b. Limit of 8 CFLs per client
4. Duct Sealing and Insulation

Primary Heating Type	Maximum Cost of 100 CFM50 Reduction in duct leakage ($)
Natural Gas and Propane with AC	$425
Electric Heat Pump	$400

5. Install heat pump water heater
    a. If there is an existing electric water heat
    b. Cost not to exceed $1900
    c. Existing System EF<=0.90
    d. EF >= 2.4
    e. Dwelling must not contain an electric resistance furnace if water heater is to be put into conditioned space
    f. 4 or more residents

6. Refrigerator Replacement

Annual kWh/yr Existing Unit	Annual kWh/yr of New Refrigerator		
	400 kWh/yr	500 kWh/yr	600 kWh/yr
800	$525	$393	$262
850	$590	$459	$328
900	$656	$525	$393
950	$722	$590	$459
1000	$787	$656	$525
1100	$919	$787	$656
1200+	$1,050	$919	$787

7. Install low-e storm windows on East, West and North facing windows.
    a. If existing windows are single pane, aluminum windows.
    b. Emissivity <+0.22
    c. Cost of storm windows not to exceed $15.00/ square foot

Arizona Block Housing Priority List – Zones 4 and 5 (Prescott, Flagstaff)

1. Air Sealing

Primary Heating Type	Maximum Cost of 100 CFM50 Reduction ($)
Propane	$125
Gas	$70
Electric Heat Pump	$70

2. Attic insulation to R-38
    a. If R-19 or less existing
3. CFLs
    a. If existing lighting is incandescent bulb in use for 2 hours per day or more
    b. Limit of 8 CFLs per client
4. Duct Sealing and Insulation

Primary Heating Type	Maximum Cost of 100 CFM50 Reduction in duct leakage ($)
Natural Gas and Propane with AC	$425
Electric Heat Pump	$425

5. Install heat pump water heater
    a. If there is an existing electric water heat
    b. Cost not to exceed $1900
    c. Existing System EF<=0.90
    d. EF >= 2.4

e. Dwelling must not contain an electric resistance furnace if water heater is to be put into conditioned space

f. 4 or more residents

6. Refrigerator Replacement

Annual kWh/yr Existing Unit	Annual kWh/yr of New Refrigerator		
	400 kWh/yr	500 kWh/yr	600 kWh/yr
800	$525	$393	$262
850	$590	$459	$328
900	$656	$525	$393
950	$722	$590	$459
1000	$787	$656	$525
1100	$919	$787	$656
1200+	$1,050	$919	$787

7. Install low-e storm windows on East, West and North facing windows.

d. If existing windows are single pane, aluminum windows.

e. Emissivity <+0.22

f. Cost of storm windows not to exceed $15.00/ square foot

Assumptions for Frame Built Houses:
1500 Square Feet
No attic insulation
No wall insulation (uninsulated 2X4 stud wall)
Windows starting at U=0.90 SHGC = 0.65
Windows are 15% of wall surface area
Pre and Post blower door = 2000 CFM @ 50 Pa

Arizona Frame Housing Priority List – Zones 2(Yuma, Phoenix)

1. Air Sealing

Primary Heating Type	Maximum Cost of 100 CFM50 Reduction ($)
Propane	$45
Gas	$25
Electric Heat Pump	$25

2. Attic Insulation to R-30
    a. If R-19 or less in attic
3. CFLs
    a. If existing lighting is incandescent bulb in use for 2 hours per day or more
    b. Limit of 8 CFLs per client
4. Solar Screen
    a. Not to exceed $5.00 per square foot
5. Dense Pack Side Wall Insulation
    a. Wall insulation not to exceed $2.50 per square foot
6. Duct Sealing and Insulation

Primary Heating Type	Maximum Cost of 100 CFM50 Reduction in duct leakage ($)
Natural Gas and Propane with AC	$380
Electric Heat Pump	$370

7. Refrigerator Replacement

Annual kWh/yr Existing Unit	Annual kWh/yr of New Refrigerator		
	400 kWh/yr	500 kWh/yr	600 kWh/yr
800	$525	$393	$262
850	$590	$459	$328
900	$656	$525	$393
950	$722	$590	$459
1000	$787	$656	$525
1100	$919	$787	$656
1200+	$1,050	$919	$787

8. Install heat pump water heater
    a. If there is an existing electric water heat
    b. Cost not to exceed $1900
    c. Existing System EF<=0.90
    d. EF >= 2.4
    e. Dwelling must not contain an electric resistance furnace if water heater is to be put into conditioned space
    f. 4 or more residents

Arizona Frame Housing Priority List – Zones 3 (Safford, Sierra Vista)

1. Air Sealing

Primary Heating Type	Maximum Cost of 100 CFM50 Reduction ($)
Propane	$75
Gas	$45
Electric Heat Pump	$45

2. Attic Insulation to R-30
    a. If R-19 or less in attic
3. Dense Pack Side Wall Insulation
    b. Not to exceed $2.50 per square foot
4. CFLs
    c. If existing lighting is incandescent bulb in use for 2 hours per day or more
    d. Limit of 8 CFLs per client

5. Duct Sealing and Insulation

Primary Heating Type	Maximum Cost of 100 CFM50 Reduction in duct leakage ($)
Natural Gas and Propane with AC	$425
Electric Heat Pump	$375

6. Install heat pump water heater
    a. If there is an existing electric water heat
    b. Cost not to exceed $1900
    c. Existing System EF<=0.90
    d. EF >= 2.4
    e. Dwelling must not contain an electric resistance furnace if water heater is to be put into conditioned space
    f. 4 or more residents
7. Refrigerator Replacement

Annual kWh/yr Existing Unit	Annual kWh/yr of New Refrigerator		
	400 kWh/yr	500 kWh/yr	600 kWh/yr
800	$525	$393	$262
850	$590	$459	$328
900	$656	$525	$393
950	$722	$590	$459
1000	$787	$656	$525
1100	$919	$787	$656
1200+	$1,050	$919	$787

8. Install low-e storm windows on East, West and North facing windows.
    g. If existing windows are single pane, aluminum windows.
    h. Emissivity <+0.22
    i. Cost of storm windows not to exceed $15.00/ square foot

Arizona Frame Housing Priority List – Zones 4 and 5 (Prescott, Flagstaff)

1. Air Sealing

Primary Heating Type	Maximum Cost of 100 CFM50 Reduction ($)
Propane	$120
Gas	$70
Electric Heat Pump	$70

2. Attic Insulation to R-38
    a. If R-19 or less in attic
3. Dense Pack Side Wall Insulation
    b. Not to exceed $2.50 per square foot
4. CFLs
    c. If existing lighting is incandescent bulb in use for 2 hours per day or more
    d. Limit of 8 CFLs per client
5. Duct Sealing and Insulation

Primary Heating Type	Maximum Cost of 100 CFM50 Reduction in duct leakage ($)
Natural Gas and Propane with AC	$425
Electric Heat Pump	$425

6. Install heat pump water heater
    a. If there is an existing electric water heat
    b. Cost not to exceed $1900
    c. Existing System EF<=0.90
    d. EF >= 2.4
    e. Dwelling must not contain an electric resistance furnace if water heater is to be put into conditioned space
    f. 4 or more residents

7. Refrigerator Replacement

Annual kWh/yr Existing Unit	Annual kWh/yr of New Refrigerator		
	400 kWh/yr	500 kWh/yr	600 kWh/yr
800	$525	$393	$262
850	$590	$459	$328
900	$656	$525	$393
950	$722	$590	$459
1000	$787	$656	$525
1100	$919	$787	$656
1200+	$1,050	$919	$787

8. Install low-e storm windows on East, West and North facing windows.
    j. If existing windows are single pane, aluminum windows.
    k. Emissivity <+0.22
    l. Cost of storm windows not to exceed $15.00/ square foot

Mobile Home Assumptions:
Gas Price: $1.19/Therm (From Southwest Gas Website)
Electricity Price: $0.11/kWh (EIA)
Propane Price: $2.60/gal.

Existing Aluminum Window: U = 1.13 SHGC = 0.80
Replacement Window: U = 0.30 SHGC = 0.30

Existing Component Insulation:
Ceiling Insulation: 1 inch of fiberglass (assembly R = 4.6)
Alternate Ceiling Configuration: Assumes R-19 has been added to roof through rehab
Belly Insulation: Wings: 1 inch rigid board
Center Cavity: 1 inch fiberglass

Walls: 2 inches of fiberglass batt, degraded (assembly R= 7.4)

Zone 2 MH (Phoenix, Yuma)

1. Air Sealing

Primary Heating Type	Maximum Cost of 100 CFM50 Reduction ($)
Natural Gas and Propane with CAC	$25
Electric Heat Pump	$25

2. Duct Sealing and Insulation

Primary Heating Type	Maximum Cost of 100 CFM50 Reduction in duct leakage ($)
Natural Gas and Propane with CAC	$180
Electric Heat Pump	$250

3. Mobile Home Roof Insulation
    a. If less than R-19
    b. Cool roof coating or sealant shall only be done in conjunction with roof insulation
4. Mobile Home Belly Insulation
5. CFLs
    a. If existing lights are incandescent and on 2 hours or more a day
    b. Limit of 8 CFLs per client
6. Solar Screens
    a. Cost not to exceed $5.00/ square foot

7. Refrigerator Replacement

Annual kWh/yr Existing Unit	Annual kWh/yr of New Refrigerator		
	400 kWh/yr	500 kWh/yr	600 kWh/yr
800	$525	$393	$262
850	$590	$459	$328
900	$656	$525	$393
950	$722	$590	$459
1000	$787	$656	$525
1100	$919	$787	$656
1200+	$1,050	$919	$787

8. Install heat pump water heater
    g. If there is an existing electric water heat
    h. Cost not to exceed $1900
    i. EF >= 2.4
    j. Dwelling must not contain an electric resistance furnace if water heater is to be put into conditioned space
    k. 4 or more residents

Zone 3 MH (Safford, Sierra Vista)

1. Air Sealing

Primary Heating Type	Maximum Cost of 100 CFM50 Reduction ($)
Gas	$45
Electric Heat Pump	$45

2. Duct Sealing and Insulation

Primary Heating Type	Maximum Cost of 100 CFM50 Reduction in duct leakage ($)
Natural Gas and Propane with CAC	$230
Electric Heat Pump	$275

3. Mobile Home Roof Insulation
    a. If less than R-19
    b. Cool roof coating or sealant shall only be done in conjunction with roof insulation
4. Mobile Home Belly Insulation
5. CFLs
    a. If existing lights are incandescent and on 2 hours or more a day
    b. Limit of 8 CFLs per client

6. Install heat pump water heater
    a. If there is an existing electric water heat
    b. Cost not to exceed $1900
    c. EF >= 2.4
    d. Dwelling must not contain an electric resistance furnace if water heater is to be put into conditioned space
    e. 4 or more residents
7. Refrigerator Replacement

Annual kWh/yr Existing Unit	Annual kWh/yr of New Refrigerator		
	400 kWh/yr	500 kWh/yr	600 kWh/yr
800	$525	$393	$262
850	$590	$459	$328
900	$656	$525	$393
950	$722	$590	$459
1000	$787	$656	$525
1100	$919	$787	$656
1200+	$1,050	$919	$787

8. Install low-e storm windows on the East, West and North facing windows.
    a. If existing windows are single pane, aluminum windows
    b. Emissivity <=0.22
    c. Cost of storm windows not to exceed $15.00/ square foot

Zone 4 & 5 MH (Prescott, Flagstaff)

1. Air Sealing

Primary Heating Type	Maximum Cost of 100 CFM50 Reduction ($)
Natural Gas and Propane with CAC	$70
Electric Heat Pump	$70

2. Duct Sealing and Insulation

Primary Heating Type	Maximum Cost of 100 CFM50 Reduction in duct leakage ($)
Natural Gas and Propane with CAC	$425
Electric Heat Pump	$425

3. Mobile Home Roof Insulation
    a. If less than R-19
    b. Cool roof coating or sealant shall only be done in conjunction with roof insulation
4. Mobile Home Belly Insulation
5. CFLs
    a. If existing lights are incandescent and on 2 hours or more a day
    b. Limit of 8 CFLs per client
6. Install heat pump water heater
    a. If there is an existing electric water heat
    b. Cost not to exceed $1700
    c. EF >= 2.4
    d. Dwelling must not contain an electric resistance furnace if water heater is to be put into conditioned space
    e. 4 or more residents
7. Refrigerator Replacement

Annual kWh/yr Existing Unit	Annual kWh/yr of New Refrigerator		
	400 kWh/yr	500 kWh/yr	600 kWh/yr
800	$525	$393	$262
850	$590	$459	$328
900	$656	$525	$393
950	$722	$590	$459
1000	$787	$656	$525
1100	$919	$787	$656
1200+	$1,050	$919	$787

8. Install low-e storm windows on the East, West and North facing windows.
    a. If existing windows are single pane, aluminum windows

b. Emissivity <=0.22
c. Cost of storm windows not to exceed $15.00/ square foot

GENERAL WASTE HEAT ITEMS

ALLOWABLE MEASURES WHICH DO NOT REQUIRE A COST EFFECTIVENESS TEST

Low-flow Showerhead- Minimum 1 plumbing permitted
Faucet Aerator- Minimum 1 plumbing permitted
Weather-stripping
Water Heater Insulation (Only for Electric Water Heaters and if local building codes permit)
Furnace or Cooling Filters (up to a one-year supply)
Door Sweep
Pipe Insulation (If applicable)
Set Back Thermostat

Total cost of LCNC should not exceed $250 of total house cost.

DURABILITY MEASURES

Measure installed to protect or insure the long-term effectiveness energy measures are allowed. Total expenditures are subject to budget limitations.

PRESSURE DIAGNOSTIC PROCEDURE

The pressure diagnostic procedures are to be followed when performing air leakage diagnostics and repair. These procedures provide crews with immediate feedback on the effectiveness of air sealing work, insure that repairs will provide long-term energy benefit in a safe manner, and provide essential management information needed to monitor the cost effectiveness of the air sealing programs. Pressure Diagnostic Decision Tree

The pressure diagnostic decision tree provides assistance to agency personnel in identifying the minimum level of pressure testing that needs to be performed to meet the Weatherization Program requirements. The decision tree is comprised of two levels of housing characteristics and corresponding test requirements. In all cases, air sealing can only be performed in conjunction with pressure diagnostics.

Level One: Homes with Central Forced Air Heating or Cooling

The **complete** pressure diagnostic process must be followed in all cases on homes with a central forced air heating or cooling system. (Evaporative cooling is not considered a forced air system in this case.)

Level Two: Homes with No Central Forced Air Heating or Cooling

The use of pressure diagnostic process is **optional** in homes that do not have a central forced air heating or cooling system and that do not contain the characteristics listed below.

Possible cost effective envelope sealing: Pressure diagnostics must be completed on homes where the cost of space heating and/or cooling provides possible cost effective envelope sealing opportunities.

Combustion appliance zone testing: The Worst Case Pressure Test must be performed in all zones that contain a combustion appliance.

Testing Procedure
When performing pressure diagnostic, crews are required to use the following procedures **IN SEQUENCE**. If a test is not performed, documentation must be provided in all cases stating the rational for not following the testing procedure.

1. Initial air leakage and room pressure tests
Duct repair
Envelope air sealing
Room pressure balancing

1. Initial Air Leakage and Room Pressure Tests:
These initial tests will provide reference information on the existing condition of the home. This information will be used to determine what retrofit measures are to be completed and their effectiveness.

Perform a complete energy audit and combustion safety test of the house. No pressure testing or air sealing can be done until the required combustion safety procedure is completed.

A. Perform Room Pressure Tests (dominant duct leakage test, room pressure test, and combustion appliance zone [CAZ] test) and record pressures. List combustion appliances located in rooms tested. **If a pressure of –3 Pascal's (Pa) or more exists in a CAZ, or the possibility exists that repair work will create a pressure of –3 Pa or more in a CAZ, corrective action must be completed before or in conjunction with air sealing or duct repair.** Discuss possible corrective action with the client. **If client refuses to allow corrective action to be completed**, no air sealing or duct repair can be completed.

Perform zonal pressures and record the results.
Perform initial Whole House CFM50 Test and record the results.
Perform Pressure Pan Test and record initial pressure difference.

F. Based on the results of the energy audit, combustion safety tests, and pressure tests, determine the extent of work to be completed.

2. Duct Repair Procedure:

Duct repair can only be performed under the supervision of a trained technician.
In all cases, air sealing can only be performed in conjunction with pressure diagnostics.
The Health and Safety Policy must be followed at all times.
Perform duct repair using approved products (see Product Guidelines) and repair techniques (see Duct Repair Techniques).

D. After initial duct repair is performed, evaluate if additional duct repair is possible.

E. Once all attainable duct leakage is repaired, perform post duct repair Whole House CFM50 Test and pressure pan readings. The difference between the initial Whole House CFM50 Test and the post duct repair Whole House CFM50 Test will provide the CFM reduction in duct leakage.

3. Envelope Air Sealing Procedure:

All duct repairs must be completed before envelope air sealing.
Envelope air sealing can only be performed under the supervision of a trained technician.
In all cases, air sealing can only be performed in conjunction with pressure diagnostics.

D. The Health and Safety Policy must be followed at all times.

E. Perform air sealing with high-quality products. Weatherization products must be permanent and guaranteed for at least 15 years.

F. Repeat Whole House CFM50 Test after air sealing work is performed and evaluate if additional air sealing is possible (see Health and Safety Policy for CFM ventilation requirements).

G .Once air sealing is completed, perform final Whole House CFM50 Test and record results.

4. Room Pressure Balancing:

All duct repair and air sealing must be completed before room pressure balancing.
Room pressure balancing can only be performed under the supervision of a trained technician.
In all cases, room pressure balancing can only be performed in conjunction with pressure diagnostics.
The Health and Safety Policy must be followed at all times.
Perform post air sealing room pressure tests (dominant duct leakage test, room pressure test, and worst case test) and record room pressures.
Review options to remedy pressure imbalances with the client. If pressure balancing is not performed, record reasons in the work summary.
Repeat room pressure tests after initial pressure balancing measures are installed and evaluate if addition pressure balancing is needed.
Once pressure balancing is completed, repeat room pressure tests and record results.

COMBUSTION SAFETY AND CARBON MONOXIDE PROCEDURES

The Combustion Safety procedure records data on combustion appliances in the house, possible health and safety issues with these appliances and the actions taken by the Weatherization program. Because combustion appliances can be the dominant factor in the health and safety of the occupants, it is imperative that the combustion safety procedures are followed in all cases.

Note: Gas/propane stoves cannot be replaced utilizing DOE funds.

Carbon Monoxide Tests
Ambient CO levels shall be monitored upon entering the combustion appliance zone and during the test period for all appliances. If ambient levels exceed 35 ppm at any time, turn off the appliance immediately and make appropriate repair recommendations according to the charts provided.

CO shall be measured of undiluted flue gases, in the throat or flue of the appliance using a digital gauge and measured in parts per million (ppm). Do not drill holes in flues for power vented or sealed combustion units. Instead, measure CO at the exterior outlet of the flue and proceed with appropriate actions according to the CO limits identified in the Combustion Safety Action Level table. For all combustion appliances, CO shall be measured at steady-state operating conditions. Measurements shall be taken of undiluted flue gases.

With the exception of unvented gas or propane cooking appliances, CO must be tested in all combustion appliances under worst-case conditions and normal draft conditions (when the appliance fails under worst-case). In addition, it is recommended that CO be tested under a mild down-draft if conditions are safe.
For gas ovens, CO shall be measured at steady state (usually after 5-10 minutes of operation) at the highest setting. When measuring CO on gas ovens, it is recommended to turn on the exhaust hood and open a window to reduce risk of exposure to elevated ambient CO levels.

Spillage and Draft Tests
Spillage and draft tests must be completed for all natural and induced draft space heating systems and water heaters. Spillage and draft must first be tested under worst-case conditions (see procedure below) and then repeated for natural conditions if the appliance fails under worst-case.

When a chimney is shared by multiple appliances the appliance with the smallest Btu input rating shall be tested first and remaining appliances tested in order of increasing input rate.

Induced draft heating systems shall be checked for spillage at the base of the chimney liner or flue. If a chimney is shared between an induced draft heating system and a natural draft water heater, spillage shall be checked at the water heater draft diverter. Vent draft pressure shall be measured at steady-state operating conditions for all natural draft heating and hot water appliances. Draft test location should be approximately 1-2' downstream of the appliance draft diverter. The test hole must be sealed with an appropriate plug after the test. Acceptable draft test results are shown below:

Acceptable Draft Test Ranges

Outside Temperature (degree F)	Minimum Draft Pressure Standard (Pa)
<10	-2.5
10-90 (T. out ÷ 40)	– 2.75
>90	-0.5

Most appliances will spill upon startup with a cold chimney. Document the amount of time it takes for spillage to stop and a positive draft to be established. Any appliance that continues to spill flue gases beyond the time limits established in the statement below has failed the spillage test.

Acceptable Appliance Spillage Periods
Vented appliances, regardless of type, that spill flue gases for more than 60 seconds after startup, fail the spillage test.

Gas Supply Safety
The entire gas/propane line must be examined and all leaks repaired. Particular care should be made in the immediate vicinity of the appliances and at the joints, shutoff valves, and pilot lines. Identify leaks using a gas leak detector and accurately locate the source of the leak using a soap bubble solution. Flexible gas lines must be replaced if they are: kinked, corroded or show signs of visible wear, the line was manufactured before 1973 (date is stamped on the date ring attached to the line), or the line has any soldered connections.

Combustion Air
Combustion air requirements, as prescribed in NFPA 54 or local gas codes, must be met on all homes with combustion appliances.

The Kbtu per hr input for heating and water heating equipment must be listed. If Kbtu per hr information is not available, state this fact and estimate input.
The location of all heating and water heating equipment must be listed.

The source and amount of combustion air for all heating and water heating equipment must be listed. For appliances that are using an interior space for combustion air, the cubic feet available is determined by the volume (area X height) of the space. Areas that can be isolated and the flow of air restricted from the combustion appliance are not to be included.

Heat Exchanger Safety Checks
Tests for possible cracked heat exchanger must be performed on all systems possible.

HVAC EQUIPMENT AND DISTRIBUTION INSTALLATION/REPAIR POLICY

The following policy must be strictly adhered to when installing or repairing HVAC equipment and distribution systems.

Repair/Replacement
Replacement of inoperable equipment is allowed under the following conditions. A complete REM Design is required for all replacement.

- Existing inoperable AC equipment upgraded with a minimum 13 SEER unit if the replacement costs are less than the estimated repair cost and the lost saving potential of the new equipment.

- Existing inoperable forced air furnace equipment upgraded with a 90+ AFUE unit if the replacement costs are less than the estimated repair cost and the lost saving potential of the new equipment.

Sizing and Installing HVAC Equipment
Minimum HVAC efficiencies:
AC: 13 SEER
Heat Pump: 13 SEER and 7.7 HSPF
Combustion furnace: 80% AFUE.

- New mechanical systems shall be sized according to the ACCA Manual J. Room-by-room load calculations using the ACCA Manual J shall be submitted for each plan to verify sizing.
- Airflow across the indoor coil and/or heat exchanger shall conform to the manufacturer's specifications.
  - Refrigerant charge shall be installed per the manufacturer's specifications.
  - Indoor and outdoor units shall be "matched" according to the ARI Directory.

Evaporative Cooler Installation
It is strictly prohibited to install an evaporative cooler on the ductwork of a forced air heating or cooling system that did not previously include an evaporative cooler. Replacing an existing evaporative cooler with a new evaporative cooler on a forced air heating or cooling system is an allowed health and safety measure.

All existing evaporative coolers must be equipped with a damper system that allows the cooler to be isolated from forced air ductwork or the conditioned space.

Installation of Forced Air Distribution Systems
All new ductwork must be installed according to the Duct Installation/Repair Techniques and Product Guidelines. All duct systems must be pressure tested and the CFM leakage rate cannot exceed 3% of conditioned sqft or 5% of high speed fan flow of the systems air handler capacity.

- Airflow to each room shall match designed airflow calculations from the ACCA Manual J to within +/- 10%.

Repair of Existing Air Distribution Systems
All ductwork must be repaired according to the Duct Installation/Repair Techniques and Product Guidelines.

Duct Installation / Repair Techniques
Flex ducts

- Seal the start collar to the plenum using mastic reinforced with mesh around the entire circumference.
- At all connections (triangles, junction boxes, etc.), fasten the inner liner to the start collar using a mechanically tightened draw band for mechanical strength.
- Seal the inner liner using approved mastic reinforced with fiberglass mesh and overlaid with another layer of mastic sufficient to cover the entire pattern in the mesh.
- Fasten the outer liner well over the start collar using a mechanically tightened draw band.
- Seal all boots to the Sheetrock using mastic or silicone caulk applied at the point where the air barrier (metal or exterior foil backing) meets the Sheetrock.

B. Duct board

- Staple all duct board joints with appropriate staples every two inches.
- Apply a layer of mastic; embed reinforcing mesh and overcoat with another layer of mastic sufficiently thick to hide the pattern in the tape.
- Allow for proper curing (manufacturer's specifications) before starting the system. This is critical.
- Seal all boots to the Sheetrock at the point where the foil backing meets the Sheetrock.

C. Metal

- Seal all points where components join together using mastic. Special attention must be given to any area where tabs provide the method of securing the joint.
- Seal all boots to the Sheetrock at the point where the metal meets the Sheetrock.
- Join all components with screws or other mechanical fastening devices as required in listings or code.

D. Building Cavities Used as Returns

- If the cavity is lined with Sheetrock, seal all joints with mastic. All gaps over 1/4 inch must be reinforced with embedded mesh tape.

- If the cavity is lined with duct board with the fiberglass side facing inside, you must create a positive air barrier in the plenum by covering the fiberglass with a material such as Sheetrock, duct board with the foil facing inside, or coat the fiberglass with mastic, etc., and seal all remaining joints in the plenum.

- If the cavity is unlined (exposed studs) and it is impossible to line the plenum, seal all joints, holes and penetrations using mastic applied with a brush attached to a handle or other extension. It may be easier and more effective to simply create a ducted plenum or chase and avoid the problems associated with using a building cavity to convey conditioned air.

- It may be necessary to cut a hole in the plenum in order to gain access and seal the interior adequately.

E. Air Handler

- Seal all penetrations and gaps between materials using mastic or silicone. If the gap is over ¼ inch, reinforce with fiberglass mesh.
- Seal the areas where the air handler meets the supply/return plenums using mastic reinforced with fiberglass mesh or other approved methods.
- Seal any panels that will require frequent access by the client (such as the filter area), using a quality temporary tape (duct tape).
- The air handler must not have any noticeable leaks.

F. Wall Penetrations

(The most common wall penetration problem is where the opening for the return grille is cut through the wall. In such an installation, even in a lined plenum, the wall cavity is open into the plenum.)

- Where an un-ducted section of the air distribution system penetrates a wall cavity, the wall cavity must be sealed.
- The cavity will first be blocked using a rigid air barrier such as Sheetrock or duct board with the foil facing the airflow.
- All seams, cracks, crevices, and openings will then be sealed airtight using approved mastic.

Duct Product Guidelines

All new ductwork will be a minimum of R-8.

Duct sealing materials shall have both excellent cohesive and adhesive qualities.

Water-based Latex mastic with at least 50 percent solids reinforced with fiberglass mesh at all duct connections, joints and seams shall be used. "Hardcast" type mastic with reinforcing mesh is also acceptable.

- The ducts shall be further attached as per manufacturer's specification, using a draw tie, plumbing strap or screws, as appropriate for a strong mechanical connection. The mechanical connection **does not** replace air sealing.
- Foil tapes, including UL 181 AP-type tapes, when used alone will not be accepted. If tape is used to temporarily hold a seam, it must be overlaid with a coating of mastic that extends at least one inch (1") past the tape on all sides, and is thick enough to hide the tape completely.
- Do not use materials that are potentially damaging or have harmful effects, such as toxic vapors or carcinogenic substances that may be harmful to the clients or the installer. Agencies are required to obtain and maintain the Material Safety Data Sheets (MSDS) for all materials used on the job. Federal law requires this procedure; further information is available locally from the vendor.
- Materials must meet all current codes and manufacturer's specifications.

INSULATION STANDARDS

Installation of Insulation

Insulation must be installed with no gaps, no voids, no compression of the insulation, or no wind intrusion into the insulation. Insulation must also be in alignment with the air barrier in all cases.

All items on the Thermal Bypass Inspection Checklist must be verified where accessible. Items not meeting these standards must be repaired unless the repair is not cost effective. The Checklist includes the following 12 areas:

Shower/Tub at Exterior Wall: Exterior walls behind tub or shower have been fully insulated. Exterior walls behind tub or shower have been faced with air barrier material.
Insulated Floor above Garage: Floor framing is completely filled with insulation or insulation is snug against sub-floor. Air barrier is installed at any exposed edges of insulation.
Attic Knee Walls Air barrier is installed on attic side of insulated wall. Insulation is in complete alignment with interior wall finish.
Attic Hatch/Drop-down Stair Attic: Opening is fully gasketed for an air-tight fit. Hatch is covered with insulation that is attached and fits snugly in framed opening.
Cantilevered Floor: Floor framing is completely filled with insulation or insulation is snug against sub-floor. Air barrier installed at any exposed edges of insulation.
Duct Shafts: Opening is enclosed as required with flashing and any remaining gaps are sealed with caulk or foam.
Flue Shaft: Opening is fully enclosed as required with flashing. Combustion clearance between flue and combustible flashing (e.g., OSB panel) are properly closed with metal collars and any remaining gaps are sealed with fire-proof caulk or foam.
Piping Shaft/ Penetrations: Opening is fully enclosed as required with flashing and any remaining gaps are sealed with caulk or foam.
Dropped Ceiling/Soffit Air barrier is fully aligned with insulated framing and any gaps are fully sealed with caulk or foam.
Fireplace Wall: Air barrier is fully aligned with insulated framing in framed shaft behind fireplace and any gaps are fully sealed with caulk or foam.
Staircase Framing at Exterior Wall/Attic: Air barrier is fully aligned with insulated framing and any gaps are fully sealed with caulk or foam.
Whole-house Fan Attic Penetration: An insulated cover is provided that is gasketed to the framed opening.

RENEWABLES

Section 206 of the Energy Policy Act of 2005 (EPACT 2005) amended the Energy Conservation and Production Act to clarify that assistance under the Weatherization Assistance Program may be provided for renewable energy systems and to provide definitions and criteria to be used in assessing eligibility

Cost Effectiveness
Renewable energy systems must follow the Cost Effectiveness Procedures. Local agencies must determine that the renewable energy system is cost effective by ensuring the discounted savings-to-investment ratio (SIR) is greater or equal to one. The net cost of renewable energy systems after rebates from third parties can be used for the SIR review.

Product Guidelines

Renewable energy systems must meet the requirements established by the State of Arizona for state tax credits which imposed several requirements on the seller of solar devices in order to qualify the equipment and application. Title 44, chapter 11, article 11 of the Arizona revised statues (44-1761- Definitions, and 44-1762 - Solar energy device warranties; installation standards; inspections) provides details on the requirements.

FINAL INSPECTION REQUIREMENTS

A final inspection shall be performed on all jobs.

The final inspection must be completed by designated inspector who did not conduct the initial energy audit and not directly involved with the completion of the job. Special consideration will be taken for subgrantees with limited staff or long distance travel. Subgrantees who would like to request a waiver for this requirement must submit in written a letter to the OEP Weatherization Manager stating the circumstances why this requirement cannot be meet and how they plan to address conducting the final inspections. This letter must be submitted annually at time of contract.

The final inspection shall verify that the house characteristics reported are correct.

The inspection shall verify that all cost effective opportunities were completed.

The inspection shall include all measures listed on the Work Performed report to verify installation has been completed in a safe and effective manner.

The inspection shall include a review of the diagnostic result, both pressure and combustion safety, to verify that all applicable tests were completed.

The inspector shall complete diagnostics on minimum of ten percent of completed homes to compare with reported results.

HEALTH AND SAFETY PLAN

Allowable energy related health and safety actions are those actions necessary to maintain the physical well being of both the occupants and/or weatherization workers where:
Costs are reasonable as determined by DOE in accordance with this approved Master Plan;
The actions must be taken to effectively perform weatherization; or
The actions are necessary as a result of weatherization work.
Each subgrantee will have 20% of their program operations set aside for energy related health and safety repairs. Each subgrantee will be responsible for the management of their health and safety budget and will be required to bill health and safety repairs as a separate budget line item. Subgrantees will also be required to obtain written approval from OEP for all health and safety repairs exceeding $2000. Subgrantees are also reminded that any health and safety expenses in excess of 20% of subgrantee program operations budget will result in disallowed cost.

Home Assessment & Client Evaluation

The weatherizing subgrantee must determine presence of at-risk occupants before proceeding with evaluation services. The Client Health & Safety Evaluation form must be reviewed and signed by the client and evaluator before the evaluation is started. (This form has been drafted and will be implemented 7/1/12)

Crew and client H&S issues are viewed as closely linked in the areas of site conditions and work procedures. Working from this concept, which assumes that any hazard associated with a work site, whether it is a work practice, an existing condition, client behavior, and so forth, has the potential of harming both crew and client, a holistic approach towards H&S is taken throughout the entire process of weatherizing a home, with special emphasis given to the initial inspection.

The initial audit, by a qualified Auditor/ Inspector, should include sensory inspections and diagnostic testing as listed in the WAP guidelines to verify the existing conditions of the home and any Health & Safety issues that could arise or halt production on said home. Details on existing conditions that could hinder Weatherization are listed below.

All of this is contingent on having well trained inspectors/ auditors. H&S issues are revealed before any work is ever done. This goes a long way towards preventing any harm befalling either crew or client.

Occupant Preexisting or Potential Health Conditions

A feature of any inspection includes client education, whereby the occupant's health problems are addressed. Once a clear understanding has been reached between the program inspector and the occupant, work practices will be deployed so as not to aggravate any preexisting condition. In some rare instances, a deferral may be the only solution.

When a person's health may be at risk and/or the work activities could constitute a health & safety hazard, the occupant at risk will be required to take appropriate action based on severity of risk. Temporary relocation of at-risk occupants may be allowed on a case by case basis. Failure or the inability to take appropriate actions must result in deferral.

Occupants will be required to reveal known or suspected health concerns as part of initial application for weatherization. The occupants of the dwelling will be screened again during the audit. The client must be provided

with information of known risks. It will also require that worker contact information (in the form of agency weatherization office staff phone numbers) be given to the client so client can inform of any issues

Health & Safety Issues

As potential hazards are identified by the Initial Auditor/ Inspector in the Home Assessment & Client Evaluation as listed above, they are analyzed in terms of their severity and how they will be dealt with up to and including deferral. Wherever possible, measures should be considered through the cost justification method of an SIR>1 as an Energy Conservation Measure (ECM) first, before using funds from the H&S allocation. Clients must always be informed of any Health or Safety risk discovered during the evaluation process in writing and written confirmation of receipt of that information by the client must be obtained and kept in the client file. A listing of Health and Safety issues are compiled, any of which that can't be corrected can result in a deferral on any given project. They are as follows:

Air Conditioning and Heating Safety

"Red tagged", inoperable or nonexistent HVAC system replacement, repair, or installation is allowed where climate conditions warrant, unless prevented by other guidance herein. Arizona climate involves a defined heating and cooling season with a Heating Degree Day (HDD) measurement range from 1180 to over 7200. The Cooling Degree Day (CDD) measurements in Arizona range from 573 to more than 5100. Arizona has a vast difference across the state due to the four recognized climate zones and a the vast difference in elevation changes from a few hundred feet above sea level to more than 7000 feet above sea level.

Research indicates of all people who die of heat stroke, about 80 percent are age 50 or older. Deaths attributed to lung disease, diabetes and hypertension increase more than 50 percent during heat waves. Heat stroke occurs 12 to 13 times more frequently in people age 65 and older than in younger persons. It is also an accepted medical fact that infants and children up to four years of age are very sensitive to the effects of high temperatures and rely on others to regulate their environment.

Air conditioning is the number one protective factor against heat-related illness and death effecting people with health issues. Therefore air conditioning system replacement, repair or installation is allowed to be categorized as health and safety in homes with occupants under four years old, over 65 years old and where there are at-risk occupants. Air conditioning system replacement, repair or installation must be attempted through cost justification as an ECM first before using H&S funding. Where this measure can be justified by the approved REM or EA-Quip audit, replacement, repair or installation is not to be included in health and safety.

Reminder- Air conditioning units cannot be installed on rental properties, as it is the requirement of the Landlord pursuant to the Arizona Landlord Tenant Act.

All replacement of HVAC equipment shall first be modeled in REM Design to attempt a SIR of 1 or greater prior to being installed as an H&S measure.

Houses with occupants between the ages of 4-64 requesting the need for air conditioning based on their health being at risk must provide a letter from a doctor defining the condition requiring an air conditioned environment and the maximum allowable air temperature relevant to that person's individual condition.

Repair of all combustible fuel line leaks from the meter or tank to the heating system or appliance are allowable H&S measures. Materials must meet federal, state, and local code. Repair (only) of gas cooking appliances in order to eliminate gas leaks and reduce unsafe levels of carbon monoxide in living area. Repair materials must meet federal, state and local code. Installation of protective materials on combustible surfaces adjacent to energy systems to meet NFPA clearance codes is allowable. Materials and installation must meet NFPA specifications. Materials must meet federal, state and local code.

Heating Systems

Heating systems are repaired or replaced, under H&S, when not operational or unsafe. This measure is taken in order to eliminate unsafe levels of carbon monoxide in the living area and to ensure adequate heating. Justification documentation in the form of the appropriate heat system checklist (per energy source) which includes all required diagnostic recordings for the individual unit, and photos demonstrating the specific issue(s) with the system must be in the client file. Replacement of operational units, where diagnostic readings are attainable, must be attempted to be cost justified as a ECM using regular weatherization funds with an SIR>1 before using H&S funds. A unit with a cracked heat exchanger where diagnostic readings are attainable must be attempted to be replaced through cost justification as an ECM first before using H&S funding. Replacement of non-operational units can only be from H&S funding.

Air Conditioning & Cooling Systems

In a case where an AC system must be replaced and it cannot be justified as an ECM, replacement is an allowable expense under H&S and will always require an approved waiver from OEP. Evaporative Cooling will always be considered an H&S measure but do not require a waiver unless the $2000 threshold is exceeded.

Package Unit Systems

When a package unit is encountered and only one component of that system is inoperable, you must first attempt to service the unit using H&S funds. If servicing the unit does not work and replacement of the inoperable component is determined to be less economical than the replacement of the entire unit, H&S funds may be used upon receiving written approval from OEP.

The weatherizing subgrantee must determine presence of at-risk occupants while also ensuring systems are present, operable and performing. Subgrantees must discuss and provide clients with information on the appropriate use and maintenance of units, with explanation, from the subgrantee.

Appliances and Water Heaters

Replacement of water heaters under H&S is allowed on a case by case basis under the following conditions outlined:
Local agencies may replace a water heater if the cost of repair exceeds the cost of replacement or if the broken water heater is more than 10 years old.
Pictures of the old water heater are to be on file at subgrantee's office.

Information and explanation on appropriate use and maintenance are to be provided to client after installation.
Disposal of old appliances and water heaters must be handled by subgrantee or their contractor.

Replacement and installation of appliances other than water heaters, such as stoves or washing machines, are not allowable H&S costs.

Asbestos

Asbestos anywhere on the interior of the dwelling that would need to be addressed either directly or incidentally during the weatherization process is not an allowable H&S cost. Testing by an AHERA professional for Asbestos is an allowable Health & Safety cost however Abatement of Asbestos is not. Policies have been in effect for asbestos presence and related work practices for many years. The approach is not to disturb, cut or drill said material and deter those measures that might do so. In instances where measures can be installed without disturbing asbestos surfaces or materials, that is the best approach. In instances where a local authority such as Code Enforcement imposes specific guidelines or requirements, service provider program staffs are to make themselves aware of those restrictions and comply with them.

If it is determined, by the Initial Auditor/ Inspector in the Home Assessment & Client Evaluation as listed above, that weatherization work cannot be performed without creating a hazard the project is to be deferred. The client is to be informed in writing of the potential hazard and the agency must not return to weatherize until an AHERA certified professional issues a clearance statement. A copy of this statement/report must be kept in the client file.

Prior to drilling or cutting an exterior wall the subsurface must be inspected for asbestos.

When vermiculite is present, unless testing determines otherwise, the unit is to be deferred. Where blower door tests are performed, it is a best practice to perform pressurization instead of depressurization. Encapsulation by an appropriately trained professional is allowed. However asbestos encapsulation and testing cost are not reimbursable by the AZ WAP. Removal is not allowed.

With regard to pipes, furnaces and other small covered surfaces, assume asbestos is present in the covering materials. Encapsulation is allowed by an AHERA asbestos control professional and should be conducted prior to blower door testing.

Clients must be informed that suspected asbestos is present and how precautions will be taken. Clients will be instructed not to disturb suspected asbestos containing material. Clients must be provided information and explanation on asbestos safety information and steps to correct deferral conditions (where applicable). The clients are required to a sign a form, provided by the weatherizing agency, indicating they have been informed (where applicable).
Biologicals and Unsanitary Conditions – odors, mustiness, bacteria, viruses, raw sewage, rotting wood, etc.

A sensory inspection is required. Clients must be informed of observed conditions. Clients must be provided information and explanation on how to maintain a sanitary home and steps to correct deferral conditions (where applicable).

Remediation of conditions that may lead to or promote biological concerns and unsanitary viruses is not an allowable cost. Addressing bacteria and viruses is not allowed. Cleaning or repairing biological and unsanitary conditions to perform weatherization is not allowed. Deferral may be necessary in cases where a known agent is present in the home that may create a serious risk to occupants or weatherization workers. Also see Mold and Moisture bullet below.

Building Structure and Roofing

Site conditions identified and documented by the Initial Auditor/ Inspector in the Home Assessment & Client Evaluation as listed above, that poses a safety hazard to its employees and subcontractors and cannot be corrected within the scope of the program. Building structure & roofing should be evaluated visually as to not disturb any existing conditions.

Building Structure – Structural problems with candidate dwellings can often lead to deferral because their scope is beyond the means of the program to treat. Beyond simple incidental repairs, such as roof patching, there is no feasible means to address severe structural defects.

During the pre-inspection or initial inspection of the dwelling, the evaluator must have access to all aspects of the structure in order to adequately and appropriately gather data for the REM energy audit if not using Priority List or to conduct the weatherization work itself. Clothing, dogs, trash or other impediments restricting access to any portion or portions of the dwelling that block necessary access may constitute a deferral.

Building rehabilitation is beyond the scope of the WAP. H&S funds should not be used when the repair is a component of an ECM. In that case, the repair should be cost justified as an incidental repair. Clients must be notified of structurally comprised areas (where applicable).

Code Compliance

Correction of preexisting code compliance issues is not an allowable cost other than where they are triggered by performing weatherization measures. State and local (or jurisdiction having authority) codes must be followed while installing weatherization measures. Condemned properties and properties where "red tagged" health and safety conditions exist that cannot be corrected under this guidance should be deferred.
Per WPN11-6a if a permit is pulled to replace a HVAC system, water heater or other appliance requiring a permit and it is require by the municipality to upgrade all smoke alarms in the home to hardwire with battery backup it would be allowed

Clients must be notified of observed code compliance issues (where applicable). H&S funds should not be used when the repair is a component of an ECM, such as fixing a light fixture in order to install a CFL bulb. In this case the cost should be cost justified as an ECM with the associated incidental repair.
Combustion Gases

Proper venting to the outside for combustion appliances, including gas dryers is required. Correction of venting is allowed when testing or inspection indicates a problem. Combustion safety testing is required when combustion appliances are present.

Correction of venting issues shall be completed and should be done as an incidental repair when it is a component of an ECM. Proper venting to the outside for combustion appliances, including gas dryers is required. Combustion safety testing is required when combustion appliances are present. Inspections, by the Initial Auditor/ Inspector in the Home Assessment & Client Evaluation as listed above, must include:

Inspections of venting of combustion appliance and confirmation of adequate clearances to combustibles.
Testing natural draft appliances for draft and spillage under worse case conditions before and after air sealing.
Inspection of cooking burners for operability and flame quality. Replacement of Cook stoves is not allowed. Repair is an allowable H&S cost.
Testing by approved WAP procedures of ambient air in combustion appliance zones & undiluted flue on applicable appliances.

Clients must be provided information and explanation of combustion safety and hazards information, including the importance of using exhaust ventilation when cooking and the importance of keeping burners clean to limit the production of CO.

Drainage – gutters, down spouts, extensions, flashing, sump pumps, landscapes, etc.

Drainage repairs are allowed with H&S funds only as they relate to code compliance. A repair is allowed as incidental repair when it is a component of an efficiency measure, but must be cost justified with the ECM(s).

Major drainage issues are beyond the scope of the Weatherization Assistance Program. Homes with conditions that may create a serious health concern that require more than incidental repair should be deferred. See Mold and Moisture bullet below.

What are major drainage issues?
Where the need for excavating equipment is brought
Installing gutters on more than half the home

An area more than 40 square feet where dirt is required to be moved

Clients must be provided information and explanation of the importance of cleaning and maintaining drainage systems, as well as the benefits of landscape design (where applicable).

Electrical, other than Knob-and Tube Wiring

Minor electrical repairs are allowed where health and safety of the occupants is at risk. Upgrades and repairs are allowed when necessary to perform specific weatherization measures such as relocating an electrical outlet to allow for a dryer to be relocated for proper ventilation or proper connection of an existing water heater.
Clients must be provided information and explanation on the hazards of overloading circuits, basic electrical safety/risks and over current protection (where applicable). H&S funds should not be used when the repair is a component of an ECM such as a service upgrade to handle increased load of a new HVAC system.

Electrical, Knob-and Tube Wiring

Knob and Tube wiring in a home in Arizona will make that home a deferral until the wiring can be upgraded to current wiring codes by homeowner or other program. Subgrantees are encouraged to seek all available programs to assist low-income households.

Subgrantees are required discuss and provide information and explanation to the client on the hazards of overloading circuits, basic electrical safety/risks and over current protection (where applicable).

Fire Hazards
Current inspection criteria (by the Initial Auditor/ Inspector in the Home Assessment & Client Evaluation as listed above) take into account fire hazards associated with combustion appliances including clearances and venting systems. Through fuel specific checklists, inspectors identify such hazards and make repairs accordingly with respect to budgetary and program limitations. Required adherence to appropriate NFPA codes when repairing or replacing equipment also minimizes the potential for fire hazards.

Correction of fire hazards is allowed when necessary to safely perform weatherization. Home evaluations include checking for fire hazards during the audit. Clients must be informed of observed hazards even if they will not be treated during weatherization.

Formaldehyde, Volatile Organic Compounds (VOCs) and other Air Pollutants

Formaldehyde and Volatile Organic Compounds (VOCs) – Formaldehyde, tobacco smoke, thinners, solvents, cleaners, and any other substances capable of negatively impacting indoor air quality are identified through the On-site inspection process. Basic strategies such as proper storage and ventilation are used to eliminate problems. Air sealing thresholds are maintained so that the presence of these pollutants are not concentrated and allowed to reach toxic amounts. However, this is primarily an occupant responsibility. In some cases, deferral may be an option.

Removal of pollutants is allowed and is required if they pose a risk to workers. If it is determined, by the Initial Auditor/ Inspector in the Home Assessment & Client Evaluation as listed above, that pollutants pose a risk to workers and removal cannot be performed or is not allowed by the client, the unit must be deferred. Removal of pollutants that is not necessary to perform weatherization (e.g. cleaning old paint cans and oil out of the garages) is not allowed.

Clients must be informed of observed conditions and associated risks. Client must be given written information and explanation on safety and proper disposal of household pollutants (where applicable).

Injury Prevention of Occupants and Weatherization Workers – Measures such as repairing stairs and replacing handrails

Workers must take all reasonable precautions against performing work on homes that will subject workers or

occupants to health and safety risks. Minor repairs and installation may be conducted only when necessary to effectively weatherize the home; otherwise these measures are not allowed.

The Initial Auditors/ Inspectors, as well as workers where jobs are in progress, are to observe if dangers are present that would prevent weatherization. Clients must be informed by auditors and/or workers of observed hazards and associated risks (where applicable)

Lead Based Paint

Presence of lead based paint associated with dwellings built before 1978. State policy mandates that all personnel working directly on dwellings shall participate in an eight (8) hour Lead Workers Safety class. With respect to Lead Based Paint issues, AZ WX uses an approach that addresses client safety and awareness, worker safety and awareness, and on-site practices.

The head of household of pre-1978 homes to be weatherized receives the informational pamphlet: "Renovating Right". The inspector will also conduct a client education segment as part of the initial inspection to assure that the occupants are fully aware of the hazards posed by Lead Based Paint exposure. This procedure is documented by using a signed receipt from the head of household which confirms that the information was not only distributed, but also explained. This receipt is kept in the client file.

All workers on site on any Weatherization project, whether they be a crew based employee of one of the subcontractors or a private sector contractor, must complete an eight (8) hour Lead Safe Worker Practices Workshop. The aim of this course is to inform the worker about Lead hazards and the proper ways to deal with them, and in doing so, to work in such a way as to not expose client families (and their own families) to these hazards. All crews and contractors are required to carry HEPA vacuum machines, respirators, disposable bio suits, and all other items associated with safe Lead Work Practices.

The program manual addresses this area specifically with detailed guidance for onsite protocols:

·Wear a tight fitting respirator and disposable coveralls.
·Seal work areas within a home with tape and plastic. Cover furniture, carpet, and other surfaces with plastic drop cloths or tarps.
·Spray water on disturbed areas to minimize dust.
·Clean-up work area each day. Sweep carefully and wet mop as needed. Use a HEPA vacuum cleaner to collect dust and paint chips.
·Keep children away from work area at all times.

While this represents only a summary of the overall Lead Safe Practices and training, it illustrates AZ WX's awareness of the issue and how it is integral to any weatherization project.

Lead Safe Weatherization work practices occur only due to health and safety concerns. It cannot be considered part of an efficiency measure and shall always be calculated and charged as a health and safety cost.

OEP's monitoring staff will have oversight responsibility in this area. While Lead Safe Work Practices have long been built into the program, the monitors will focus more directly on this area as they conduct their monitoring visits. Program operators will be required to show that all Lead Based Paint protocols: information sharing, lead safe work practices, proper equipment, and so forth are up to date and in compliance to all regulations whatever they turn out to be. Those programs that are not in compliance, and fail to comply once identified, will face the most serious sanctions that can be leveled: reduced allocation to start with, loss of contract if necessary. Special attention will be aimed at those programs failing to meet requirements in the area of Lead Safe Work Practices since it poses such tangible consequences for the households that are served.

Subgrantees must follow EPA's lead; Renovation, Repair and Painting (RRP). In addition to RRP, Weatherization requires all weatherization crews working in pre-1978 housing to be trained in Lead Safe Weatherization (LSW). Deferral is required when the extent and condition of lead-based paint in the house would potentially create further health and safety hazards.

Arizona's current status is as follows: all sub grantees have applied for and received Lead Renovator Firm status. All auditors (inspectors) have acquired Lead Renovator (RRP) certification as well as select crew leaders. Additionally, private contractors (excluding HVAC and Plumbers) have also applied for and received Lead Renovator Firm status. This is a requirement for contracting with the program. Private contractors have also met the requirement of having adequate RRP certified employees among their ranks. In summary, Arizona has met the EPA requirements as they now stand by April 2010 deadline. As new contractors apply to work on WX projects the EPA requirements are explained during the application process. No private contractors will be awarded work on any pre-1978 dwellings that don't meet the EPA rules.

Private contractors will be required to furnish proof of RRP and Lead Renovator Firm status as a condition of working for the WX program. The monitoring staff will routinely check that documentation that is on file at each agency verifying compliance to the EPA rules.

All weatherization crews working on pre-1978 homes must receive the 8 hour LSW training and a certified renovator must be assigned to the project and be readily available.

State Monitor/Trainers must be Certified Renovators and receive the 8 hour LSW training.

The head of household of every home to be weatherized receives the informational pamphlet: "Renovating Right". The inspector also conducts a client education segment as part of the initial inspection to assure that the occupants are fully aware of the hazards posed by Lead Based Paint exposure.

The RRP requirements of client education apply. The agencies must give the client a copy of the EPA publication: July 2011 Edition of: *The Lead-Safe Certified Guide to Renovate Right Pamphlet* and have the client sign the Sample Pre-Renovation Form located in the back of the Pamphlet to certify the client has been given the pamphlet.

That signed form must be kept in the client's file to show proof the client has received educational material about the dangers of lead paint.

The certified renovator must be physically present at the work site while signs are being posted, containment is being established, and the work area is being cleaned after the renovation to ensure that these tasks are performed correctly. Although the certified renovator is not required to be on-site at all times, while the renovation project is ongoing, a certified renovator must nonetheless regularly direct the work being performed by other workers to ensure that the work practices are being followed. When a certified renovator is not physically present at the work site, the workers must be able to contact the renovator immediately by telephone or other mechanism. In addition, the certified renovator must perform the post-renovation cleaning verification.

Mold and Moisture

Limited water damage repairs that can be addressed by weatherization workers and correction of moisture and mold creating conditions are allowed when necessary in order to weatherize the home and to ensure the long term stability and durability or the measures. Where severe Mold and Moisture issues cannot be addressed, deferral is required.

The Arizona Weatherization program is not a mold remediation program and funds should not be used to test, abate, remediate, purchase insurance, or alleviate existing mold conditions identified during the audit by the Initial Auditor/ Inspector, the work performance period or the quality control inspection. Most typically, weatherization services may need to be delayed. All local agencies must include some form of notification or disclaimer to the client upon the discovery of a mold condition and what was specifically that was done to the home that is expected to alleviate the condition and/or that the work performed should not promote new mold growth.

Major moisture problems that cannot be corrected within the scope of the program such as:

·An enclosed crawlspace or basement that has standing water for significant periods of time due to inadequate ground or surface water drainage.

·Any building with no overhangs and no gutters, exhibiting signs of major moisture problems such as blistering paint and extensive mold/mildew on the inside of the house.

The clients must be provided with a disclaimer on mold and moisture awareness.

Occupational Safety and Health Administration (OSHA) and Crew Safety

Workers must follow OSHA standards and Material Safety Data Sheets (MSDS) and take precautions to ensure the health and safety of themselves and other workers. MSDS must be posted wherever workers may be exposed to hazardous materials.

MSDS information is monitored during OEP compliance monitoring. Field monitoring performs unit file review for evidence of safe work practices. Field monitoring of in progress units will perform assessments to determine if crews are utilizing safe work practices.

OSHA 10 hour training for all workers, including contractors, assessors, and inspectors, is required. OSHA 30 hour training is required for all crew leaders and OEP Monitor/Trainers by June 30, 2012. All new employees must obtain OSHA 10 or 30 depending on their position held within 180 days of hire. This training can be obtained in various ways. The following are suggested resources.

Classroom Training.
Construction 10 hour and Construction 30

Southwest Building Science Technical Center

Online Training. OSHA has accepted the below sites for online outreach training. We suggest that you sample them before choosing.

Construction 10 hour

1. Advance Online
2. Click Safety (also Roadway, Cal-OSHA, and Spanish)
3. Summit Training Source (also Spanish version)
4. Pure Safety (also Spanish version)
5. Career Safe - (Youth and Corporate versions)
6. Redvector
7. 360Training
8. University of South Florida
9. Coastal Training Technologies
10. Turner Construction

Construction 30 hour

1. Turner Construction (also Spanish version)
2. Click Safety
3. 360Training
4. Summit Training Source
5. University of South Florida
6. Pure Safety
7. Advance Online

Information on obtaining OSHA outreach classes in construction
To find in-person training conducted by an authorized OSHA Outreach Trainer:

a. See www.OutreachTrainers.org to find outreach trainers and/or their schedules

We can send you lists of active trainers in your state – e-mail us if you want this list. Use the lists to contact trainers for information on their training plans.
b. OSHA Education Center in your area may offer it - www.osha.gov/dte/edcenters/map.html
c. The OSHA Consultation office in your area may offer it, see
www.osha.gov/dcsp/smallbusiness/consult_directory.html

Pests

If found, by the Initial Auditor/ Inspector in the Home Assessment & Client Evaluation as listed above, any pest infestation within the dwelling or in any area outside of the dwelling where service provider staff or subcontractors would have to work to perform weatherization measure is an allowable expense. Cost of pest control cannot exceeded 300 dollars and/or 20 percent of the homes budget. If the cost is great than that amount the home will be a deferral until the problem can be handled by another program or the homeowner. (Pests include, but are not limited to: fleas, roaches, rodents, etc.).

Clients must be informed of observed condition and associated risks.

Radon

Whenever site conditions permit, exposed dirt must be covered with a vapor barrier except for mobile homes without skirting or an exterior under surface that serves as a vapor barrier. In homes where radon may be present, precautions should be taken to reduce the likeliness of making radon issues worse. In extreme cases deferral may be an option.

In the State of Arizona Radon testing or remediation is not an allowable H&S measure. Clients must be provided with the EPA consumer's guide to radon.

Refrigerant

Refrigerators are allowed to be replaced as an ECM only. All reclaimed refrigerant processes must follow the Clean Air Act 1990, section 608, as amended by 40 CFR82, 5/14/93. All EPA testing protocols must apply to any testing. Clients are to be advised not to disturb refrigerant. Anyone working with refrigerant, within or employed by the WAP, must have the appropriate training, either an EPA-approved section 608 type I or universal certification. For any appliance containing refrigerant, disposal must include refrigerant reclamation.

Non-certified technicians may not attach or disconnect hoses of gauges to measure pressure within the appliances, top-off or remove refrigerant from appliances or otherwise damage the integrity of the appliance.

Smoke, Carbon Monoxide Alarms, and Fire Extinguishers

1. Weatherization agencies must install carbon monoxide (CO) alarms and smoke alarms in dwelling units where these devices are nonexistent or non-functioning.
2. CO alarms must be, UL listed, installed in accordance with the manufacturer's recommendations and located in compliance with state and local building codes and must have the capability to accurately detect and display low levels of carbon monoxide to 10 ppm and comply with other program requirements.
Local agencies must provide the occupant(s) of the dwelling unit with verbal and written information regarding the following:

a. Dangers of CO and smoke.
b. How to operate and reset the CO and smoke alarms.
c. How to read the CO alarm if there is a digital display.
d. How to respond to CO levels above 10 ppm. (Symptoms of CO poisoning and how the occupant should address the issue should it arise)
The most common symptoms of CO poisoning are headache, dizziness, weakness, nausea, vomiting, chest pain, and confusion.

If these symptoms are present shut off gas appliances, open windows and doors, get out of the home, seek medical help if needed and call a repair man.
e. How to change the batteries of CO and smoke alarms.

3. Smoke alarms must be, installed in accordance with the manufacturer's recommendations, listed in accordance with UL 217, comply with NFPA 72 and other program requirements.
4. Where multiple smoke alarms are required interconnection is required. Actuation of any one smoke alarm shall activate all of the alarms in the individual unit. Hard wiring and interconnection is not required in existing areas provided:
The alteration or repair does not cause the removal of wall or ceiling finishes exposing the structure, and
No attic, crawl or basement is available which can provide access for hard wiring and interconnection without the removal of interior finishes.
5. On average no more than two smoke alarms will be installed in home unless a permit is pulled and code compliance for the municipality the home is located in states differently
:6. If the home has an attached garage or carport a smoke and CO detector are required to be installed if none are present

7. If the home is all electric with no attached garage or carport only smoke alarms are needed

8. Providing fire extinguishers is allowed only when solid fuel is present. Fire extinguishers must be installed, according to the manufactures recommendations, be type ABC, UL listed, ≤ 10 lb and with a permanently affixed wall bracket to receive the extinguisher. The client must sign a written agreement to allow a fire extinguisher to be installed in the home within sight of the solid fuel burning heat system when standing at the unit. The agency must discuss and provide information on the use and upkeep of the extinguisher to the client.

Solid Fuel Heating (Wood Stoves, etc)

The weatherization agency must inspect the stove, chimney and flue. Combustion zone depressurization (CAZ) is required per the Energy Out West Field Guide.

Maintenance, repair, and replacement of primary indoor heating units is allowed where occupant health and safety is a concern. Maintenance and repair of secondary heating units is allowed. Replacement of secondary heating units is not allowed. This system must be operational and inspected before any other weatherization begins.

Stand Alone Electric Heaters

Defined as, but not limited to, heaters that do not have a permanent connection to electric power. Repair, replacement or installation is not allowed. Removal is recommended. Circuitry must be checked to ensure adequate power supply for existing space heaters by a licensed electrician.

Clients must be informed of the hazards associated with these types of heaters and the weatherization agency must collect a signed waiver from the client if removal is not allowed.

Space Heaters, Unvented Combustion

Unvented combustion space heaters are not considered a primary heat source. Removal is required, except as secondary heat source and where the unit conforms to ANSI Z21.11.2. Units that do not meet ANSI Z21.11.2 must be removed prior to weatherization but may remain until a replacement heating system is in place. Testing for air-free carbon monoxide (CO) is to be performed per the Energy Out West Field Guide. All units must have an ANSI Z21.11.1 label.

The client must be informed of the dangers of unvented space heaters – CO, Moisture, NO2, CO can be dangerous even if CO alarm does not sound. The replacement system must be operational and inspected using all Energy Out West Field Guide test protocols before any other weatherization begins

Space Heaters, Vented Combustion

These units will be treated as furnaces. The Energy Out West Field Guide details the testing required during an evaluation. The replacement system must be operational and inspected using all Energy Out West Field Guide test protocols before any other weatherization begins.

Spray Polyurethane Foam (SPF)

Use EPA recommendations (available online at http:www.epa.gov/dfe/pubs/projects/spf/spray_polyurethane_foam.html) when working within the conditioned space of when SPF fumes become evident within the conditioned space. When working outside the building envelope, isolate the area where foam will be applied, take precautions so that fumes will not transfer to inside conditioned space, and exhaust fumes outside the home. Testing will include checking for penetrations in the building envelope. Sensory inspection inside the home for fumes during foam application must also occur.

The client must be informed of plans to use two-part foam and the precautions that may be necessary. Workers using foam products must receive training on the proper use of these various products and understand the specification for each application type. Documentation of installers viewing an installation video or online training and verification of reading and understanding product use information must be kept at the service provider agency. MSDS sheets are mandatory for any foam product used and a thorough understanding of the temperature sensitivity of the product in use is required.

Ventilation

The State of Arizona will be implementing ASHRAE 62.2 to the fullest extent possible as required by DOE WPN 12-1. Arizona will be implementing the ASHRAE standard in the following phases.

Phase 1 will consist training which will be conducted by the Southwest Building Science Technical Center this will be completed by August 2012. Training is to include knowledge of ASHRAE 62.2, how to calculate needed ventilation rates, and installation of necessary ventilation equipment.
Phase 2 will consist of installation and technical assistance from OEP field staff. Full Implementation will be required by June 30, 2013.

Window and Door Replacement, Window Guards

Replacement, Repair, or installation is not an allowable H&S cost but may be allowed as an ECM if cost justified. If disturbing lead paint, follow LSW practices and the client must be informed on lead risks as indicated in this H&S plan when applicable. Replacement, repair or installation of doors, windows, or window guards is not an allowable H&S cost.

Window Glass is an allowable cost if it is an immediate danger to occupants if budget permits

Deferrals

Deferrals, and/or "walkaways" are processed accordingly:

a. The client shall be informed in writing as to why the dwelling cannot be weatherized. If there are conditions that the client must correct before service is provided, those conditions must also be stated in writing.

b. The service provider is required to refer the client to any alternate program such as home rehab, if one is available in the area.

c. The service provider shall clearly indicate in the client file why the dwelling was given "deferral" status.

d. The service provider must document all referrals to other programs or services in the client file.

e. The client will receive any information prescribed in the Health and Safety section that is appropriate.

Client Education

This procedure is documented by using a signed receipt from the head of household which confirms that the information was not only distributed, but also explained. This receipt is kept in the client file. Draft forms have been developed to document all information discussed and given to the clients along with application and onsite interviews to verify preexisting at risk and health concerns.

REFRIGERATOR REPLACEMENT POLICY

Subgrantees will need to follow the tables for refrigerator replacement located within their climate specific zone.

METERING REQUIREMENTS

Meter at least 10% of units replaced — It is not required to meter every existing refrigerator that is replaced. Initially, as the program gains experience, DOE will require metering on at least 10% of the units replaced. Units that cannot be located in the Association of Home Appliance Manufacturers, or other refrigerator databases, may make up all or most of the 10% requirement.

Meter at least 2 hours — The minimum metering duration required to obtain results accurate enough to make a reliable replacement decision has been debated for several years. DOE believes a two-hour minimum metering duration is an appropriate compromise.

MATERIALS

New refrigerators shall:
Not exceed the size of the replaced unit.
Have a minimum 1-year warranty.

INSTALLATION

The electrical outlet shall:
Provide the voltage specified on the ID plate of the new refrigerator.
Be properly grounded and/or protected with a properly functioning GFCI device.
Be located within reach of the refrigerator without the use of an extension cord.
Be in good condition with nothing visibly wrong (e.g., not cracked or broken, and no spark, smoke, or burn marks, etc.).
Meet refrigerator manufacturer's specifications for space and clearances.

The contractor shall:
Deliver and install the new refrigerator.
Level the unit to ensure proper operation.
Ensure that door hinges are on the appropriate side.
Instruct the customer on refrigerator operation.
Deliver warranties and operating manuals to the customer.
Set temperature controls appropriately.

DISPOSAL

The contractor shall:
Take unit out of service. Make sure the existing refrigerator, removed from the house, and **DOES NOT** find its way back onto the electric grid.
Dispose of unit in an environmentally responsible manner. All refrigerators replaced must be properly disposed of according to the environmental standards in the Clean Air Act of 1990, section 608, as amended by Final Rule 40 CFR 82, May 14, 1993.

Take unit to a de-manufacturing facility or incorporate disposal requirements in vendor contract.
Remove all packing materials from the customer's premises.

REPORTING

The sub-grantee shall record the following information for both the existing and replacement refrigerators:
Manufacturer (for years available)
Brand
Year of manufacture
Model number
Type (e.g., side-by-side, top freezer)
Database estimated kWh/yr

On metered units, the sub-grantee shall provide an estimated annual kWh usage and the duration of metered data.
Provide saving to Investment Ratio for the replacement refrigerator.

WRITTEN AUTHORIZATION
There may be cases where it is the best interest of the client that a refrigerator be installed that does not meet the requirements of the Weatherization Assistance Program Refrigerator Replacement Policy. In these cases, written authorization must be obtained from OEP.

OEP CONTRACT NO. EW-ESA-12-2182-02Y2

EXHIBIT C

FFATA (Federal Funding Accountability and Transparency Act) Reporting Requirements
Public Law 109–282; 31 U.S.C. 6101

This section must be completed for any awards greater than or equal to $25,000

Name of Entity Receiving Award	Gila County Offices of Community Services
Amount of Award	FY12 remaining unspent funding balance, to be determined
Funding Agency	State of Arizona, Governor's Office of Energy Policy
CFDA number	81.042
Award Title	Department of Energy Weatherization

Location: City Globe State AZ Congressional District 1

DUNS number 02407139

1) Is 80% or more of annual gross revenues from Federal awards? Yes [X] No [ ]

2) Do you receive $25 million or more annually from Federal awards? Yes [ ] No [X]

If you answered Yes to both questions, you must provide the following:

Names and Total Compensation of Top Five paid executives:

1#:	Name		Total Compensation	
2#:	Name		Total Compensation	
3#:	Name		Total Compensation	
4#:	Name		Total Compensation	
5#:	Name		Total Compensation	

GILA COUNTY ATTORNEY
Daisy Flores

Re: County Attorney's Office approval of IGA pursuant to A.R.S. § 11-952(D).

To whom it may concern:

The County Attorney's Office has reviewed the Intergovernmental Agreement attached to this agenda item and has determined that it is in its "proper form" and "is within the powers and authority granted under the laws of this state to such public agency or public procurement unit" pursuant to A.R.S. § A.R.S. § 11-952(D).

Explanation of the Gila County Attorney's Office Intergovernmental Agreement (IGA) Review

A.R.S. § 11-952(D) requires that

> every agreement or contract involving any public agency or public procurement unit of this state . . . before its execution, shall be submitted to the attorney for each such public agency or public procurement unit, who shall determine whether the agreement is in proper form and is within the powers and authority granted under the laws of this state to such public agency or public procurement unit.

In performing this review, the County Attorney's Office reviews IGAs to see that they are in "proper form" prior to their execution. "Proper form" means that the contract conforms to fundamental contract law, conforms to specific legislative requirements, and is within the powers and authority granted to the public agency. It does not mean that the County Attorney's Office approves of or supports the policy objectives contained in the IGA. That approval is solely the province of the public agency through its elected body.

Likewise, this approval is not a certification that the IGA has been properly executed. Proper execution can only be determined after all the entities entering into the IGA have taken legal action to approve the IGA. There is no statutory requirement for the County Attorney's Office to certify that IGAs are properly executed.

Nonetheless, it is imperative for each public agency to ensure that each IGA is properly executed because A.R.S. § 11-952(F) requires that "[a]ppropriate action … applicable to the governing bodies of the participating agencies approving or extending the duration of the … contract shall be necessary before any such agreement, contract or extension may be filed or become effective." This can be done by ensuring that the governing body gives the public proper notice of the meeting wherein action will be taken to approve the IGA, that the item is adequately described in the agenda accompanying the notice, and that the governing body takes such action. Any questions regarding whether the IGA has been properly executed may be directed to the County Attorney's Office.

Proper execution of IGAs is important because A.R.S. § 11-952(H) provides that "[p]ayment for services under this section shall not be made unless pursuant to a fully approved written contract." Additionally, A.R.S. § 11-952(I) provides that "[a] person who authorizes payment of any monies in violation of this section is liable for the monies paid plus twenty per cent of such amount and legal interest from the date of payment."

The public agency or department submitting the IGA for review has the responsibility to read and understand the IGA in order to completely understand its obligations under the IGA if it is ultimately approved by the public entity's board. This is because while the County Attorney's Office can approve the IGA as to form, the office may not have any idea whether the public agency has the capacity to actually comply with its contractual obligations. Also, the County Attorney's Office does not monitor IGA compliance. Hence the public entity or submitting department will need to be prepared to monitor their own compliance. A thorough knowledge of the provisions of the IGA will be necessary to monitor compliance.

Before determining whether an IGA contract "is in proper form," the County Attorney's Office will answer any questions or concerns the public agency has about the contract. It is the responsibility of the public agency or department submitting the IGA for review to ask any specific questions or address any concerns it has about the IGA to the County Attorney's Office at the same time they submit the IGA for review. Making such an inquiry also helps improve the County Attorney's Office review of the IGA because it will help focus the review on specific issues that are of greatest concern to the public agency. Failing to make such an inquiry when the agency does have issues or concerns will decrease the ability of the County Attorney's Office to meaningfully review the IGA.

ARF-1365 **Consent Agenda Item 4- G**

Regular BOS Meeting

Meeting Date: 08/07/2012

Submitted For:	Malissa Buzan, CAP/Housing Services Manager	Submitted By:	Cecilia Bejarano, Executive Administrative Assistant, Community Services Division
Department:	Community Services Division	Division:	Comm. Action Program/Housing Servs.

Information

Request/Subject

Amendment No. 5 to Contract No. DE111073001 with Arizona Department of Economic Security

Background Information

The Community Action Network is made up of public and private agencies that work to alleviate poverty and empower low-income families in communities throughout Arizona. Most of the agencies are Community Action Agencies (CAAs), created through the Economic Opportunity Act of 1964. CAAs provide services to more than 150,000 people annually.

They coordinate emergency assistance, provide weatherization services, sponsor youth programs, operate senior centers and provide transportation in rural areas. CAAs provide linkage to job training opportunities, GED preparation courses and vocational education programs. They provide a range of services addressing poverty-related problems from income management and credit counseling to entrepreneurial development and small business incubators; from domestic violence crisis assistance to family development programs and parenting classes, food pantries and emergency shelters to low income housing development and community revitalization projects.

Evaluation

Allowable activities are designed to assist low-income families and individuals to remove obstacles and solve problems that block the achievement of self sufficiency to secure and retain meaningful employment, attain adequate education, make better use of available income, obtain and maintain adequate housing, and obtain emergency assistance. Community Services: the primary objectives of this service are to strengthen community capabilities for planning and coordinating the use of a broad range of resources related to the elimination of poverty. Case Management: components of this emergency service include short-term crisis services and utility assistance services, case management services, emergency shelter, homeless services, move-in assistance, senior services, eviction prevention, and utility assistance.

Conclusion

Amendment No. 5 to Contract No. DE111073001 changes the requirements for Contractors and subcontractor staff who provide direct services to juveniles or vulnerable adults.

Recommendation

The Community Action Program Housing Services Manager recommends that the Board of Supervisors approve this amendment.

Suggested Motion

Approval of Amendment No. 5 to an Intergovernmental Agreement (Contract No. DE111073001) between the Arizona Department of Economic Security and Gila County Division of Community Services, Housing Services, requiring Contractors and subcontractor staff who are required or allowed to provide services directly to juveniles or vulnerable adults to possess a fingerprint clearance card that meets Level One requirements effective on the date of last signature through June 30, 2013.

Attachments

Amendment No. 5 to Contract DE111073001 AZ Dept. of Eonomic Security

Amendment No. 4 to Contract DE111073001 AZ Dept. of Economic Security

Amendment No. 3 to Contract DE111073001 AZ Dept. of Economic Security

Amendment No. 2 to Contract De111073001 AZ Dept. of Economic Security

Amendment No. 1 to Contract DE111073001 AZ Dept. of Economic Security

Original Contract DE111073001 AZ Dept. of Economic Security

Legal Explanation

DEPARTMENT OF ECONOMIC SECURITY
Your Partner For A Stronger Arizona

Intergovernmental Agreement
CONTRACT AMENDMENT

1. CONTRACTOR *(Name and address)*	2. CONTRACT ID NUMBER
Gila County Division of Health and Community Services **5515 S. Apache Ave., Suite 200** **Globe, Arizona 85501**	**DE111073001**
	3. AMENDMENT NUMBER **Five (5)**

4. THE PARTIES AGREE TO THE FOLLOWING AMENDMENT
Pursuant to the Terms and Conditions, Amendments or Modifications section, the purpose of this amendment is to:

Delete and Replace:
Terms and Conditions, Fingerprinting section 32.1.1, delete and replace the original with the following:
Effective immediately, Contractor and subcontractor staff who are required or allowed to provide services directly to juveniles or vulnerable adults shall possess a fingerprint clearance card that meets Level One requirements as described in ARS 41-1758.07, OR, if waiting receipt of their clearance card, shall provide services under direct visual supervision and oversight of an employee who possess a level one fingerprint clearance card until they are issued a valid fingerprint clearance card that meets the Level One requirements. Contractor and subcontractor staff include current employees whether paid or not who transfer into a direct service position, volunteers, and new employees whether paid or not.

5. EXCEPT AS PROVIDED HEREIN, ALL TERMS AND CONDITIONS OF THE ORIGINAL CONTRACT AS HERETOFORE CHANGED AND/OR AMENDED REMAIN UNCHANGED AND IN FULL FORCE AND EFFECT. THE AMENDMENT SHALL BECOME EFFECTIVE ON THE DATE OF LAST SIGNATURE UNLESS OTHERWISE SPECIFIED HEREIN. BY SIGNING THIS FORM ON BEHALF OF THE CONTRACTOR, THE SIGNATORY CERTIFIES HE/SHE HAS THE AUTHORITY TO BIND THE CONTRACTOR TO THIS CONTRACT.

6. **ARIZONA DEPARTMENT OF ECONOMIC SECURITY**	7. NAME OF CONTRACTOR **Gila County Division of Health and Community Services**
SIGNATURE OF AUTHORIZED INDIVIDUAL	SIGNATURE OF AUTHORIZED INDIVIDUAL
TYPED NAME **Elizabeth G. Csaki, CPPB**	TYPED NAME Tommie C. Martin
TITLE **Contract Administration Procurement Manager**	TITLE Chairman, Gila County Board of Supervisors
DATE	DATE

IN ACCORDANCE WITH ARS §11-952 THIS CONTRACT AMENDMENT HAS BEEN REVIEWED BY THE UNDERSIGNED WHO HAVE DETERMINED THAT THIS CONTRACT AMENDMENT IS IN APPROPRIATE FORM AND WITHIN THE POWERS AND AUTHORITY GRANTED TO EACH RESPECTIVE PUBLIC BODY.

ARIZONA ATTORNEY GENERAL'S OFFICE

By: _____
Assistant Attorney General

Date: _____

By: _____
Public Agency Legal Counsel
Bryan B. Chambers

Date: _____

DEPARTMENT OF ECONOMIC SECURITY

Your Partner For A Stronger Arizona

Intergovernmental Agreement

CONTRACT AMENDMENT

1. CONTRACTOR *(Name and address)*	2. CONTRACT ID NUMBER DE111073001
Gila County Division of Health and Community Services 5515 S. Apache Ave., Suite 200 Globe, Arizona 85501	3. AMENDMENT NUMBER Four (4)

4. THE PARTIES AGREE TO THE FOLLOWING AMENDMENT

Pursuant to the Terms and Conditions, Levels of Service section, and Amendments or Modifications section, the purpose of this amendment is to:

Funding for the contract period beginning July 1, 2012 through June 30, 2013:

The reimbursement ceiling for the service for Case Management is $320,006.

The reimbursement ceiling for the service for Community Services is $150,000.

The cumulative reimbursement ceiling for the contract period July 1, 2010 to June 30, 2015 is increased to $1,735,780.13.

Therefore, the Itemized Service Budgets for the service of Case Management (Attachment A) and Community Services (Attachment B) are revised and attached.

Reporting: Effective July 1, 2012 programmatic data shall be submitted through direct entry into CAP60 or through an agreed upon data bridge from an existing data system into CAP60 as identified on Programmatic Reports. All other reports such as invoices, payment verification forms and narrative information shall be provided on the forms currently required by this contract.

5. EXCEPT AS PROVIDED HEREIN, ALL TERMS AND CONDITIONS OF THE ORIGINAL CONTRACT AS HERETOFORE CHANGED AND/OR AMENDED REMAIN UNCHANGED AND IN FULL FORCE AND EFFECT. THE AMENDMENT SHALL BECOME EFFECTIVE ON THE DATE OF LAST SIGNATURE UNLESS OTHERWISE SPECIFIED HEREIN. BY SIGNING THIS FORM ON BEHALF OF THE CONTRACTOR, THE SIGNATORY CERTIFIES HE/SHE HAS THE AUTHORITY TO BIND THE CONTRACTOR TO THIS CONTRACT.

6. **ARIZONA DEPARTMENT OF ECONOMIC SECURITY**	7. NAME OF CONTRACTOR Gila County Division of Health and Community Services
SIGNATURE OF AUTHORIZED INDIVIDUAL	SIGNATURE OF AUTHORIZED INDIVIDUAL
TYPED NAME **Elizabeth G. Csaki, CPPB**	TYPED NAME Tommie C. Martin
TITLE **Contract Administration Procurement Manager**	TITLE Chairman, Gila County Board of Supervisors
DATE	DATE

IN ACCORDANCE WITH ARS §11-952 THIS CONTRACT AMENDMENT HAS BEEN REVIEWED BY THE UNDERSIGNED WHO HAVE DETERMINED THAT THIS CONTRACT AMENDMENT IS IN APPROPRIATE FORM AND WITHIN THE POWERS AND AUTHORITY GRANTED TO EACH RESPECTIVE PUBLIC BODY.

ARIZONA ATTORNEY GENERAL'S OFFICE

By: _____
Assistant Attorney General

Date: _____

By: _____
Public Agency Legal Counsel
Bryan B. Chambers

Date: _____

ITEMIZED SERVICE BUDGET
FOR CONTRACT SERVICE: Case Management
PROVIDER NAME: Gila County Community Action Program
CONTRACT PERIOD: 7-01-12 TO 6-30-13

1 PERSONNEL

Number of Positions	FTE Level	Position Title	Salary for Contract Period	% Allocated to Service A+ D = Total		Total Service Cost	DES Cost
1	1	Divisional Fiscal Manager	$53,893	50%+0=50%	50%	$ 26,947	$ 26,947
1	1	Divisional Accountant	$35,413	50%+0=50%	50%	$ 17,707	$ 8,853
1	1	Program Manager	$47,632	25%+25=50%	50%	$ 23,816	$ 11,908
1	1	Case Manager	$30,534	0%+50%=50%	50%	$ 15,267	$ 15,267
1	1	Case Manager	$32,094	0%+50%=50%	50%	$ 16,047	$ 16,047
1	1	Clerk	$32,885	0%+50%=50%	50%	$ 16,443	$ 8,221
TOTAL PERSONNEL COST:						**$ 116,227**	**$ 87,243**

2 EMPLOYEE RELATED EXPENSES

Item	Basis			Service Cost	DES Cost
Health Insurance	$595.83 per mo x 12 mo X 3 @ 25%			$ 5,362	$ 5,362
	$595.83 per mo x 12 mo X 3 @ 50%			$ 10,725	$ 10,725
FICA	0.0765	X	$116,227	$ 8,891	$ 4,446
Workman's Comp	0.003	X	$116,227	$ 349	$ 174
Retirement	0.1115	X	$116,227	$ 12,959	$ 6,480
TOTAL ERE COST:				**$ 38,286**	**$ 27,187**

3 PROFESSIONAL AND OUTSIDE SERVICES

Item	Basis	Service Cost	DES Cost
N/A		$ -	$ -
TOTAL PROF & OUTSIDE COSTS:		**$ -**	**$ -**

4 TRAVEL

Item	Basis	Service Cost	DES Cost
Gas/Vehicles/Maint	$300 per month x 12 months	$ 3,600	$ 1,800
Per Diem	$25 per day for 20 days for 5 FTE's	$ 2,500	$ 1,250
TOTAL TRAVEL COSTS:		**$ 6,100**	**$ 3,050**

5 SPACE

Item	Basis	Service Cost	DES Cost
Rent - Globe Office	Rent $1,673 monthly X 12 months (Inclused elctricity, cleaning, water, etc.)	$ 20,076	$ 10,038
Sparkletts/Other Space Expense	$100 x 12 months	$ 1,200	$ 600
TOTAL SPACE COSTS:		**$ 21,276**	**$ 10,638**

6 EQUIPMENT

Item	Basis	Service Cost	DES Cost
N/A			
		$ -	$ -
TOTAL EQUIPMENT COSTS:		**$ -**	**$ -**

7 MATERIALS & SUPPLIES

Item	Basis	Service Cost	DES Cost
General Office Supplies	$200 per month x 6 FTE's x 12 months	$ 14,400	$ 5,406
Postage	$250 per month x 12 months	$ 3,000	$ 1,500
TOTAL MAT & SUPP COSTS:		**$ 17,400**	**$ 6,906**

8 OPERATING SERVICES

Item	Basis	Service Cost	DES Cost
Staff Training & Registration	$1000 for training sessions for 3 FTE's (inlcudes hotel & registration)	$ 3,000	$ 3,000
Local Fax, 800 Line, Phone Line & Service Maintenance, Leases Agreements & Memberships/Dues	$1,713.30 x 12 months	$ 20,560	$ 10,280
TOTAL OPERATING SERVICE COSTS:		**$ 23,560**	**$ 13,280**

9 INDIRECT COSTS

Item	Basis	Service Cost	DES Cost
N/A		$ -	$ -
TOTAL INDIRECT COSTS:		**$ -**	**$ -**

10	**SUBTOTAL ADMINISTRATIVE COSTS:**	**$ 222,849**	**$ 148,304**

11 VOUCHERS

Item			Service Cost	DES Cost
1	LIHEAP	*77*	$ 141,269	$ 141,269
2	LIHCON	*78*	$ -	$ -
3	LLVG		$ -	$ -
4	NHN	*70*	$ 433	$ 433
5	TANF	*49*	$ 30,000	$ 30,000
6	ESG	*17*	$ -	$ -
TOTAL VOUCHER COSTS:			**$ 171,702**	**$ 171,702**

12	**TOTAL COSTS:**	**$ 394,551**	**$ 320,006**

REVENUE SOURCES:		
DES Case Mgt.	$ 320,006	$ 320,006
Gila County	$ 74,545	
TOTAL REVENUE:	**$ 394,551**	**$ 320,006**
TOTAL REVENUE:	**$ 394,551**	**$ 320,006**

4/10/2012
Revised

ITEMIZED SERVICE BUDGET
FOR CONTRACT SERVICE: Community Services
PROVIDER NAME: Gila County Community Action Program
CONTRACT PERIOD: 7-01-12 TO 6-30-13

1 PERSONNEL

Number of Positions	FTE Level	Position Title	Salary for Contract Period	% Allocated to Service A+ D = Total		Total Service Cost	DES Cost
1	1	Community Services Director	$81,994	50%+0=50%	50%	$ 40,997	$ 8,199
1	1	Divisional Accountant	$35,413	50%+0=50%	50%	$ 17,707	$ 3,541
1	1	Divisional Fiscal Manager	$53,893	50%+0=50%	50%	$ 26,947	$ 5,389
1	1	Divisional Special Projects	$27,908	50%+0=50%	50%	$ 13,954	$ 6,977
1	1	Divisional Assistant	$39,104	50%+0=50%	50%	$ 19,552	$ 9,776
1	1	Program Manager	$47,632	25%+25=50%	50%	$ 23,816	$ 11,908
1	1	Case Manager	$30,534	0%+50%=50%	50%	$ 15,267	$ 7,634
1	1	Case Manager	$32,094	0%+50%=50%	50%	$ 16,047	$ 8,024
1	1	Clerk	$32,885	0%+50%=50%	50%	$ 16,443	$ 8,221
TOTAL PERSONNEL COST:						**$ 190,730**	**$ 69,669**

2 EMPLOYEE RELATED EXPENSES

Item	Basis			Service Cost	DES Cost
Health Insurance	$595.83 per mo x 12 mo X 3 @ 10%			$ 2,145	$ 2,145
	$595.83 per mo x 12 mo X 6 @ 25%			$ 10,725	$ 10,725
FICA	0.0765	X	$190,730	$ 14,591	$ 7,295
Workman's Comp	0.003	X	$190,730	$ 572	$ 286
Retirement	0.1115	X	$190,730	$ 21,266	$ 10,633
TOTAL ERE COST:				**$ 49,299**	**$ 31,084**

3 PROFESSIONAL AND OUTSIDE SERVICES

Item	Basis	Service Cost	DES Cost
N/A		$ -	$ -
TOTAL PROF & OUTSIDE COSTS:		**$ -**	**$ -**

4 TRAVEL

Item	Basis	Service Cost	DES Cost
N/A		$ -	$ -
TOTAL TRAVEL COSTS:		**$ -**	**$ -**

5 SPACE

Item	Basis	Service Cost	DES Cost
N/A		$ -	$ -
TOTAL SPACE COSTS:		**$ -**	**$ -**

6 EQUIPMENT

Item	Basis	Service Cost	DES Cost
N/A		$ -	$ -
TOTAL EQUIPMENT COSTS:		$ -	$ -

7 MATERIALS & SUPPLIES

Item	Basis	Service Cost	DES Cost
N/A		$ -	$ -
TOTAL MAT & SUPP COSTS:		$ -	$ -

8 OPERATING SERVICES

Item	Basis	Service Cost	DES Cost
N/A		$ -	$ -
TOTAL OPERATING SERVICE COSTS:		$ -	$ -

9 INDIRECT COSTS

Item	Basis	Service Cost	DES Cost
N/A		$ -	$ -
TOTAL INDIRECT COSTS:		$ -	$ -

10	SUBTOTAL ADMINISTRATIVE COSTS:	$ 240,029	$ 100,753

11 VOUCHERS

Item		Service Cost	DES Cost
Vouchers - Direct Client Services	Average $490 x 100 households	$ 49,000	$ 49,000
	Average $247 x 1 household	$ 247	$ 247
TOTAL VOUCHER COSTS:		$ 49,247	$ 49,247

12	TOTAL COSTS:	$ 289,276	$ 150,000

REVENUE SOURCES:		
DES CSV	$ 150,000	$ 150,000
Gila County	$ 139,276	
TOTAL REVENUE:	$ 289,276	$ 150,000
TOTAL REVENUE:	$ 289,276	$ 150,000

4/10/2012
Revised

DEPARTMENT OF ECONOMIC SECURITY
Your Partner For A Stronger Arizona

Intergovernmental Agreement

CONTRACT AMENDMENT

1. CONTRACTOR *(Name and address)*	2. CONTRACT ID NUMBER
Gila County Division of Health and Community Services 5515 S. Apache Ave., Suite 200 Globe, Arizona 85501	DE111073001
	3. AMENDMENT NUMBER Three (3)

4. THE PARTIES AGREE TO THE FOLLOWING AMENDMENT
Pursuant to the Terms and Conditions, Amendments or Modifications section, the purpose of this amendment is to:

Funding for the contract period July 1, 2011 through June 30, 2012:
The reimbursement ceiling for the service Case Management is increased from $426,729 to $456,257. This is an increase of $29,528, which includes $6,389 "Carryover" funding. The carryover funding is not added to the cumulative reimbursement ceiling.

The reimbursement ceiling for the service Community Services is increased from $150,000 to $220,258. This is an increase of $70,258, which includes $70,258 "Carryover" funding. The carryover funding is not added to the cumulative reimbursement ceiling.

The cumulative reimbursement ceiling for the contract period July 1, 2010 through June 30, 2015 is $1,265,774.13.

Therefore, the Itemized Service Budget for the services of Case Management (Attachment A) and Community Services (Attachment B) are revised and attached.

Delete and Replace:
Terms and Conditions, section 4.5, delete and replace the original with the following:

"Equipment" means all vehicles, furniture, machinery, electronic data processing (EDP) equipment, software and all other equipment costing $5,000.00 or more, including all normal and necessary expenses incurred to make the equipment ready for its intended use (e.g., taxes, freight, installation, assembly and testing charges, etc.), and with a useful life of greater than one year. Equipment as used herein does not include real property (e.g., land, buildings, structures, or facilities' improvements).

5. EXCEPT AS PROVIDED HEREIN, ALL TERMS AND CONDITIONS OF THE ORIGINAL CONTRACT AS HERETOFORE CHANGED AND/OR AMENDED REMAIN UNCHANGED AND IN FULL FORCE AND EFFECT. THE AMENDMENT SHALL BECOME EFFECTIVE ON THE DATE OF LAST SIGNATURE UNLESS OTHERWISE SPECIFIED HEREIN. BY SIGNING THIS FORM ON BEHALF OF THE CONTRACTOR, THE SIGNATORY CERTIFIES HE/SHE HAS THE AUTHORITY TO BIND THE CONTRACTOR TO THIS CONTRACT.

6. ARIZONA DEPARTMENT OF ECONOMIC SECURITY	7. NAME OF CONTRACTOR Gila County Division of Health and Community Services
SIGNATURE OF AUTHORIZED INDIVIDUAL	SIGNATURE OF AUTHORIZED INDIVIDUAL
TYPED NAME **Elizabeth G. Csaki, CPPB**	TYPED NAME Tommie C. Martin
TITLE **Contract Administration Procurement Manager**	TITLE Chairman, Gila County Board of Supervisors
DATE 12/7/2011	DATE 11/15/11

IN ACCORDANCE WITH ARS §11-952 THIS CONTRACT AMENDMENT HAS BEEN REVIEWED BY THE UNDERSIGNED WHO HAVE DETERMINED THAT THIS CONTRACT AMENDMENT IS IN APPROPRIATE FORM AND WITHIN THE POWERS AND AUTHORITY GRANTED TO EACH RESPECTIVE PUBLIC BODY.

ARIZONA ATTORNEY GENERAL'S OFFICE

By: _____
Assistant Attorney General
Date: 12/5/11

By: _____
Public Agency Legal Counsel
Bryan B. Chambers
Date: 11 15 11

ITEMIZED SERVICE BUDGET
FOR CONTRACT SERVICE: Case Management
PROVIDER NAME: Gila County Community Action Program
CONTRACT PERIOD: 7-01-11 TO 6-30-12

1 PERSONNEL

Number of Positions	FTE Level	Position Title	Salary for Contract Period	% Allocated to Service A+ D = Total		Total Service Cost	DES Cost
1	1	Divisional Fiscal Manager	$53,893	50%+0=50%	50%	$ 26,947	$ 26,947
1	1	Divisional Accountant	$35,422	50%+0=50%	50%	$ 17,711	$ 17,711
1	1	Program Manager	$47,632	25%+25=50%	50%	$ 23,816	$ 11,908
1	1	Case Manager	$30,534	0%+50%=50%	50%	$ 15,267	$ 15,267
1	1	Case Manager	$32,094	0%+50%=50%	50%	$ 16,047	$ 16,047
1	1	Clerk	$21,091	0%+50%=50%	50%	$ 10,546	$ 10,546
TOTAL PERSONNEL COST:						**$ 110,334**	**$ 98,426**

2 EMPLOYEE RELATED EXPENSES

Item	Basis			Service Cost	DES Cost
Health Insurance	$595.83 per mo x 12 mo X 1 @ 25%			$ 1,787	$ 1,787
	$595.83 per mo x 12 mo X 5 @ 50%			$ 17,875	$ 17,875
FICA	0.0765	X	$110,334	$ 8,441	$ 4,220
Workman's Comp	0.003	X	$110,334	$ 331	$ 166
Retirement	0.1075	X	$110,334	$ 11,861	$ 5,930
TOTAL ERE COST:				**$ 40,295**	**$ 29,978**

3 PROFESSIONAL AND OUTSIDE SERVICES

Item	Basis	Service Cost	DES Cost
N/A		$ -	$ -
TOTAL PROF & OUTSIDE COSTS:		**$ -**	**$ -**

4 TRAVEL

Item	Basis	Service Cost	DES Cost
Gas/Vehicles/Maint	$300 per month x 12 months	$ 3,600	$ 3,600
Per Diem	$42 per day for 20 days for 5 FTE's	$ 4,200	$ 4,200
TOTAL TRAVEL COSTS:		**$ 7,800**	**$ 7,800**

5 SPACE

Item	Basis	Service Cost	DES Cost
Rent - Globe Office	Rent $1,673 monthly X 12 months (Inclused elctricity, cleaning, water, etc.)	$ 20,076	$ 12,046
Sparkletts/Other Space Expense	$100 x 12 months	$ 1,200	$ 240
TOTAL SPACE COSTS:		**$ 21,276**	**$ 12,286**

6 EQUIPMENT

Item	Basis	Service Cost	DES Cost
N/A			
		$ -	$ -
TOTAL EQUIPMENT COSTS:		**$ -**	**$ -**

7 MATERIALS & SUPPLIES

Item	Basis	Service Cost	DES Cost
General Office Supplies	$200 per month x 6 FTE's x 12 months	$ 14,400	$ 8,489
Postage	$250 per month x 12 months	$ 3,000	$ 1,200
TOTAL MAT & SUPP COSTS:		**$ 17,400**	**$ 9,689**

8 OPERATING SERVICES

Item	Basis	Service Cost	DES Cost
Staff Training & Registration	$1000 for training sessions for 3 FTE's	$ 3,000	$ 3,000
	$1500 for out of state training for 2 FTE's (inlcudes flight, hotel & registration)	$ 3,000	$ 3,000
Printing, Publishing & Advertising Costs	4 publications @ $200 in local papers	$ 800	$ 800
Local Fax, 800 Line, Phone Line & Service Maintenance, Leases Agreements & Memberships/Dues	$1,713.30 x 12 months	$ 20,560	$ 14,340
TOTAL OPERATING SERVICE COSTS:		**$ 27,360**	**$ 21,140**

9 INDIRECT COSTS

Item	Basis	Service Cost	DES Cost
N/A		$ -	$ -
TOTAL INDIRECT COSTS:		**$ -**	**$ -**

10	SUBTOTAL ADMINISTRATIVE COSTS:	$ 224,465	$ 179,319

11 VOUCHERS

Item			Service Cost	DES Cost
1	LIHEAP	*77*	$ 243,108	$ 243,108
2	LIHCON	*78*	$ 7,013	$ 7,013
3	LLVG		$ -	$ -
4	NHN	*70*	$ 865	$ 865
5	TANF	*49*	$ 19,293	$ 19,293
6	ESG	*17*	$ 6,659	$ 6,659
TOTAL VOUCHER COSTS:			**$ 276,938**	**$ 276,938**

12	TOTAL COSTS:	$ 501,403	$ 456,257

REVENUE SOURCES:		
DES Case Mgt.	$ 456,257	$ 456,257
Gila County	$ 45,146	
TOTAL REVENUE:	**$ 501,403**	**$ 456,257**
TOTAL REVENUE:	**$ 501,403**	**$ 456,257**

ITEMIZED SERVICE BUDGET
FOR CONTRACT SERVICE: Community Services
PROVIDER NAME: Gila County Community Action Program
CONTRACT PERIOD: 7-01-11 TO 6-30-12

1 PERSONNEL

Number of Positions	FTE Level	Position Title	Salary for Contract Period	% Allocated to Service A+ D = Total		Total Service Cost	DES Cost
1	1	Community Services Director	$81,994	50%+0=50%	50%	$ 40,997	$ 4,100
1	1	Divisional Accountant	$35,422	50%+0=50%	50%	$ 17,711	$ 3,542
1	1	Divisional Program Manager	$55,245	50%+0=50%	50%	$ 27,623	$ 5,525
1	1	Divisional Special Projects	$27,908	50%+0=50%	50%	$ 13,954	$ 5,582
1	1	Divisional Assistant	$32,885	50%+0=50%	50%	$ 16,443	$ 6,577
1	1	Program Manager	$47,632	25%+25=50%	50%	$ 23,816	$ 23,816
1	1	Case Manager	$30,534	0%+50%=50%	50%	$ 15,267	$ 15,267
1	1	Case Manager	$32,094	0%+50%=50%	50%	$ 16,047	$ 16,047
1	1	Clerk	$21,091	0%+50%=50%	50%	$ 10,546	$ 10,546
TOTAL PERSONNEL COST:						**$ 182,404**	**$ 91,002**

2 EMPLOYEE RELATED EXPENSES

Item	Basis			Service Cost	DES Cost
Health Insurance	$595.83 per mo x 12 mo X 1 @ 5%			$ 357	$ 357
	$595.83 per mo x 12 mo X 2 @ 10%			$ 1,430	$ 1,430
	$595.83 per mo x 12 mo X 2 @ 20%			$ 2,860	$ 2,860
	$595.83 per mo x 12 mo X 4 @ 50%			$ 14,300	$ 14,300
FICA	0.0765	X	$182,404	$ 13,954	$ 6,977
Workman's Comp	0.003	X	$182,404	$ 547	$ 274
Retirement	0.1075	X	$182,404	$ 19,608	$ 9,804
TOTAL ERE COST:				**$ 53,056**	**$ 36,002**

3 PROFESSIONAL AND OUTSIDE SERVICES

Item	Basis	Service Cost	DES Cost
N/A		$ -	$ -
TOTAL PROF & OUTSIDE COSTS:		**$ -**	**$ -**

4 TRAVEL

Item	Basis	Service Cost	DES Cost
Gas/Vehicles/Maint	$500 per month x 12 months	$ 6,000	$ 6,000
Per Diem	$42 per day for 20 days for 5 FTE's	$ 4,200	$ 4,200
TOTAL TRAVEL COSTS:		**$ 10,200**	**$ 10,200**

5 SPACE

Item	Basis	Service Cost	DES Cost
Rent - Globe Office	Rent $1,673 monthly X 12 months (Inclused elctricity, cleaning, water, etc.)	$ 20,076	$ 8,154
N/A		$ -	$ -
TOTAL SPACE COSTS:		**$ 20,076**	**$ 8,154**

6 EQUIPMENT

Item	Basis	Service Cost	DES Cost
Scanners	3 @ $300 based on IT quote	$ 900	$ 900
TOTAL EQUIPMENT COSTS:		**$ 900**	**$ 900**

7 MATERIALS & SUPPLIES

Item	Basis	Service Cost	DES Cost
N/A		$ -	$ -
TOTAL MAT & SUPP COSTS:		**$ -**	**$ -**

8 OPERATING SERVICES

Item	Basis	Service Cost	DES Cost
Staff Training & Registration	$500 for training sessions for 2 FTE's @ 100%	$ 1,000	$ 1,000
Local Fax, 800 Line, Phone Line & Service Maintenance, Leases Agreements & Memberships/Dues	$1,000 x 12 months	$ 12,000	$ 12,000
TOTAL OPERATING SERVICE COSTS:		**$ 13,000**	**$ 13,000**

9 INDIRECT COSTS

Item	Basis	Service Cost	DES Cost
N/A		$ -	$ -
TOTAL INDIRECT COSTS:		**$ -**	**$ -**

10	**SUBTOTAL ADMINISTRATIVE COSTS:**	**$ 279,636**	**$ 159,258**

11 VOUCHERS

Item		Service Cost	DES Cost
Vouchers - Direct Client Services	Average $500 x 122 households	$ 61,000	$ 61,000
TOTAL VOUCHER COSTS:		**$ 61,000**	**$ 61,000**

12	**TOTAL COSTS:**	**$ 340,636**	**$ 220,258**

REVENUE SOURCES:		
DES CSV	$ 220,258	$ 220,258
Gila County	$ 120,378	
TOTAL REVENUE:	**$ 340,636**	**$ 220,258**
TOTAL REVENUE:	**$ 340,636**	**$ 220,258**

DEPARTMENT OF ECONOMIC SECURITY

Your Partner For A Stronger Arizona

Intergovernmental Agreement

CONTRACT AMENDMENT

1. CONTRACTOR *(Name and address)*	2. CONTRACT ID NUMBER
Gila County Division of Health and Community Services 5515 S. Apache Ave., Suite 200 Globe, Arizona 85501	DE111073001
	3. AMENDMENT NUMBER Two (2)

4. THE PARTIES AGREE TO THE FOLLOWING AMENDMENT

Pursuant to the Terms and Conditions, Levels of Service section, the purpose of this amendment is to:

Add funding for the contract period beginning July 1, 2011 through June 30, 2012:

The reimbursement ceiling for the service for Case Management is increased from $480,974 to $907,703. This is an increase of $426,729.

The reimbursement ceiling for the service for Community Services is increased from $163,557 to $313,557. This is an increase of $150,000.

The cumulative reimbursement ceiling for the contract period July 1, 2011 to June 30, 2015 is: $1,242,635.13.

Therefore, the Itemized Service Budgets for the service of Case Management (Attachment A) and Community Services (Attachment B) are revised and attached.

5. EXCEPT AS PROVIDED HEREIN, ALL TERMS AND CONDITIONS OF THE ORIGINAL CONTRACT AS HERETOFORE CHANGED AND/OR AMENDED REMAIN UNCHANGED AND IN FULL FORCE AND EFFECT. THE AMENDMENT SHALL BECOME EFFECTIVE ON THE DATE OF LAST SIGNATURE UNLESS OTHERWISE SPECIFIED HEREIN. BY SIGNING THIS FORM ON BEHALF OF THE CONTRACTOR, THE SIGNATORY CERTIFIES HE/SHE HAS THE AUTHORITY TO BIND THE CONTRACTOR TO THIS CONTRACT.

6. ARIZONA DEPARTMENT OF ECONOMIC SECURITY	7. NAME OF CONTRACTOR Gila County Division of Health and Community Services
SIGNATURE OF AUTHORIZED INDIVIDUAL	SIGNATURE OF AUTHORIZED INDIVIDUAL
TYPED NAME **Elizabeth G. Csaki, CPPB**	TYPED NAME Michael A. Pastor
TITLE **Contract Administration Procurement Manager**	TITLE Chairman, Gila County Board of Supervisors
DATE 6/28/2011	DATE 6-7-11

IN ACCORDANCE WITH ARS §11-952 THIS CONTRACT AMENDMENT HAS BEEN REVIEWED BY THE UNDERSIGNED WHO HAVE DETERMINED THAT THIS CONTRACT AMENDMENT IS IN APPROPRIATE FORM AND WITHIN THE POWERS AND AUTHORITY GRANTED TO EACH RESPECTIVE PUBLIC BODY.

ARIZONA ATTORNEY GENERAL'S OFFICE

By: _____
Assistant Attorney General

Date: 6/28/11

By: _____
Public Agency Legal Counsel
Bryan B. Chambers
Chief Deputy County Attorney

Date: 6-7-2011

ITEMIZED SERVICE BUDGET
FOR CONTRACT SERVICE: Case Management
PROVIDER NAME: Gila County Community Action Program
CONTRACT PERIOD: 7-01-11 TO 6-30-12

1 PERSONNEL

Number of Positions	FTE Level	Position Title	Salary for Contract Period	% Allocated to Service A+ D = Total		Total Service Cost	DES Cost
1	1	Divisional Fiscal Manager	$53,893	50%+0=50%	50%	$ 26,947	$ 26,947
1	1	Divisional Accountant	$35,422	50%+0=50%	50%	$ 17,711	$ 17,711
1	1	Program Manager	$47,632	25%+25=50%	50%	$ 23,816	$ 11,908
1	1	Case Manager	$30,534	0%+50%=50%	50%	$ 15,267	$ 15,267
1	1	Case Manager	$32,094	0%+50%=50%	50%	$ 16,047	$ 16,047
1	1	Clerk	$21,091	0%+50%=50%	50%	$ 10,546	$ 10,546
TOTAL PERSONNEL COST:						**$ 110,334**	**$ 98,426**

2 EMPLOYEE RELATED EXPENSES

Item	Basis			Service Cost	DES Cost
Health Insurance	$595.83 per mo x 12 mo X 1 @ 25%			$ 1,787	$ 1,787
	$595.83 per mo x 12 mo X 5 @ 50%			$ 17,875	$ 17,875
FICA	0.0765	X	$110,334	$ 8,441	$ 4,220
Workman's Comp	0.003	X	$110,334	$ 331	$ 166
Retirement	0.1075	X	$110,334	$ 11,861	$ 5,930
TOTAL ERE COST:				**$ 40,295**	**$ 29,978**

3 PROFESSIONAL AND OUTSIDE SERVICES

Item	Basis	Service Cost	DES Cost
N/A		$ -	$ -
TOTAL PROF & OUTSIDE COSTS:		**$ -**	**$ -**

4 TRAVEL

Item	Basis	Service Cost	DES Cost
Gas/Vehicles/Maint	$225 per month x 12 months	$ 2,700	$ 2,262
Per Diem	$42 per day for 20 days for 5 FTE's	$ 4,200	$ 3,326
TOTAL TRAVEL COSTS:		**$ 6,900**	**$ 5,588**

5 SPACE

Item	Basis	Service Cost	DES Cost
Rent - Globe Office	Rent $1,673 monthly X 12 months (Inclused elctricity, cleaning, water, etc.)	$ 20,076	$ 10,038
Sparkletts/Other Space Expense	$100 x 12 months	$ 1,200	$ 240
TOTAL SPACE COSTS:		**$ 21,276**	**$ 10,278**

6 EQUIPMENT

Item	Basis	Service Cost	DES Cost
N/A		$ -	$ -
TOTAL EQUIPMENT COSTS:		**$ -**	**$ -**

7 MATERIALS & SUPPLIES

Item	Basis	Service Cost	DES Cost
General Office Supplies	$200 per month x 6 FTE's x 12 months	$ 14,400	$ 8,489
Postage	$250 per month x 12 months	$ 3,000	$ 1,200
TOTAL MAT & SUPP COSTS:		**$ 17,400**	**$ 9,689**

8 OPERATING SERVICES

Item	Basis	Service Cost	DES Cost
Staff Training & Registration	$1000 for training sessions for 3 FTE's	$ 3,000	$ 3,000
	$1500 for out of state training for 2 FTE's (inlcudes flight, hotel & registration)	$ 3,000	$ 3,000
Printing, Publishing & Advertising Costs	4 publications @ $200 in local papers	$ 800	$ 160
Local Fax, 800 Line, Phone Line & Service Maintenance, Leases Agreements & Memberships/Dues	$1,713.30 x 12 months	$ 20,560	$ 10,280
TOTAL OPERATING SERVICE COSTS:		**$ 27,360**	**$ 16,440**

9 INDIRECT COSTS

Item	Basis	Service Cost	DES Cost
N/A		$ -	$ -
TOTAL INDIRECT COSTS:		**$ -**	**$ -**

10	SUBTOTAL ADMINISTRATIVE COSTS:	$ 223,565	$ 170,399

11 VOUCHERS

Item			Service Cost	DES Cost
1	LIHEAP	*77*	$ 222,500	$ 222,500
2	LIHCON	*78*	$ 7,013	$ 7,013
3	LLVG		$ -	$ -
4	NHN	*70*	$ 865	$ 865
5	TANF	*49*	$ 19,293	$ 19,293
6	ESG	*17*	$ 6,659	$ 6,659
TOTAL VOUCHER COSTS:			**$ 256,330**	**$ 256,330**

12	**TOTAL COSTS:**	**$ 479,895**	**$ 426,729**

REVENUE SOURCES:		
DES Case Mgt.	$ 426,729	$ 426,729
Gila County	$ 53,166	
TOTAL REVENUE:	**$ 479,895**	**$ 426,729**
TOTAL REVENUE:	**$ 479,895**	**$ 426,729**

ITEMIZED SERVICE BUDGET
FOR CONTRACT SERVICE: Community Services
PROVIDER NAME: Gila County Community Action Program
CONTRACT PERIOD: 7-01-11 TO 6-30-12

1 PERSONNEL

Number of Positions	FTE Level	Position Title	Salary for Contract Period	% Allocated to Service A+ D = Total		Total Service Cost	DES Cost
1	1	Community Services Director	$81,994	50%+0=50%	50%	$ 40,997	$ 4,100
1	1	Divisional Accountant	$35,422	50%+0=50%	50%	$ 17,711	$ 3,542
1	1	Divisional Program Manager	$55,245	50%+0=50%	50%	$ 27,623	$ 5,525
1	1	Divisional Special Projects	$27,908	50%+0=50%	50%	$ 13,954	$ 5,582
1	1	Divisional Assistant	$32,885	50%+0=50%	50%	$ 16,443	$ 6,577
1	1	Program Manager	$47,632	25%+25=50%	50%	$ 23,816	$ 23,816
1	1	Case Manager	$30,534	0%+50%=50%	50%	$ 15,267	$ 15,267
1	1	Case Manager	$32,094	0%+50%=50%	50%	$ 16,047	$ 16,047
1	1	Clerk	$21,091	0%+50%=50%	50%	$ 10,546	$ 10,546
TOTAL PERSONNEL COST:						**$ 182,404**	**$ 91,002**

2 EMPLOYEE RELATED EXPENSES

Item	Basis			Service Cost	DES Cost
Health Insurance	$595.83 per mo x 12 mo X 1 @ 5%			$ 357	$ 357
	$595.83 per mo x 12 mo X 2 @ 10%			$ 1,430	$ 1,430
	$595.83 per mo x 12 mo X 2 @ 20%			$ 2,860	$ 2,860
	$595.83 per mo x 12 mo X 4 @ 50%			$ 14,300	$ 14,300
FICA	0.0765	X	$182,404	$ 13,954	$ 6,977
Workman's Comp	0.003	X	$182,404	$ 547	$ 274
Retirement	0.1075	X	$182,404	$ 19,608	$ 9,804
TOTAL ERE COST:				**$ 53,056**	**$ 36,002**

3 PROFESSIONAL AND OUTSIDE SERVICES

Item	Basis	Service Cost	DES Cost
N/A		$ -	$ -
TOTAL PROF & OUTSIDE COSTS:		**$ -**	**$ -**

4 TRAVEL

Item	Basis	Service Cost	DES Cost
Gas/Vehicles/Maint	$500 per month x 12 months	$ 6,000	$ 5,700
Per Diem	$42 per day for 20 days for 5 FTE's	$ 4,200	$ 2,632
TOTAL TRAVEL COSTS:		**$ 10,200**	**$ 8,332**

5 SPACE

Item	Basis	Service Cost	DES Cost
N/A		$ -	$ -
TOTAL SPACE COSTS:		**$ -**	**$ -**

6 EQUIPMENT

Item	Basis	Service Cost	DES Cost
N/A		$ -	$ -
TOTAL EQUIPMENT COSTS:		**$ -**	**$ -**

7 MATERIALS & SUPPLIES

Item	Basis	Service Cost	DES Cost
N/A		$ -	$ -
TOTAL MAT & SUPP COSTS:		**$ -**	**$ -**

8 OPERATING SERVICES

Item	Basis	Service Cost	DES Cost
Staff Training & Registration	$500 for training sessions for 2 FTE's @ 100%	$ 1,000	$ 1,000
Local Fax, 800 Line, Phone Line & Service	$1,000 x 12 months		
Maintenance, Leases Agreements & Memberships/Dues		$ 12,000	$ 3,600
TOTAL OPERATING SERVICE COSTS:		**$ 13,000**	**$ 4,600**

9 INDIRECT COSTS

Item	Basis	Service Cost	DES Cost
N/A		$ -	$ -
TOTAL INDIRECT COSTS:		**$ -**	**$ -**

10	**SUBTOTAL ADMINISTRATIVE COSTS:**	$ 258,659	$ 139,936

11 VOUCHERS

Item		Service Cost	DES Cost
Vouchers - Direct Client Services	Average $500 x 19 households	$ 10,064	$ 10,064
TOTAL VOUCHER COSTS:	Average $564 x 1 household	**$ 10,064**	**$ 10,064**

12	**TOTAL COSTS:**	$ 268,723	$ 150,000

REVENUE SOURCES:		
DES CSV	$ 150,000	$ 150,000
Gila County	$ 118,723	
TOTAL REVENUE:	**$ 268,723**	**$ 150,000**
TOTAL REVENUE:	**$ 268,723**	**$ 150,000**

DEPARTMENT OF ECONOMIC SECURITY

Your Partner For A Stronger Arizona

Intergovernmental Agreement

CONTRACT AMENDMENT

1. CONTRACTOR *(Name and address)*	2. CONTRACT ID NUMBER
Gila County Division of Community Services 5515 South Apache Avenue, Suite 200 Globe, AZ 85501	DE111073-001
	3. AMENDMENT NUMBER One (1)

4. THE PARTIES AGREE TO THE FOLLOWING AMENDMENT

Pursuant to the Terms and Conditions, Amendments or Modifications section, the purpose of this amendment is to:

Add Funding:
The reimbursement ceiling for the service Case Management is increased from $445,831.00 to $480,974.00. This is an increase of $35,143.00

The reimbursement ceiling for the service Community Service is increase from $ 150,000.00 to $163,557.00. This is an increase of $13,557.00

Reduce Funding:
The reimbursement ceiling for the service of Community Service – ARRA is decreased from the estimated amount of $21,565.00 to the available amount of $ 21,375.13. This is a decrease of $189.87.

The cumulative reimbursement ceiling for the contract period July 1, 2010 through June 30, 2011 is: $665,906.13.

Therefore, the Itemized Service Budget for the service Case Management (Attachment A), Community Service (Attachment B), and Community Service – ARRA (Attachment C) is revised and attached.

Revise:
Scope of Work 9.6.1(2) to read "Quarterly ROMA Outcomes Report (See Exhibit E) by October 25th, January 25th, April 25th of each calendar year. The Contractor shall **NOT** submit a Fourth Quarter Report, but shall include Fourth Quarter data within the Annual CSBG IS (See Exhibit F). (Contractor must utilize format specified by DES)."

5. EXCEPT AS PROVIDED HEREIN, ALL TERMS AND CONDITIONS OF THE ORIGINAL CONTRACT AS HERETOFORE CHANGED AND/OR AMENDED REMAIN UNCHANGED AND IN FULL FORCE AND EFFECT. THE AMENDMENT SHALL BECOME EFFECTIVE ON THE DATE OF LAST SIGNATURE UNLESS OTHERWISE SPECIFIED HEREIN. BY SIGNING THIS FORM ON BEHALF OF THE CONTRACTOR, THE SIGNATORY CERTIFIES HE/SHE HAS THE AUTHORITY TO BIND THE CONTRACTOR TO THIS CONTRACT.

6. **ARIZONA DEPARTMENT OF ECONOMIC SECURITY**	7. NAME OF CONTRACTOR **Gila County Division of Community Services**
SIGNATURE OF AUTHORIZED INDIVIDUAL	SIGNATURE OF AUTHORIZED INDIVIDUAL
TYPED NAME **Elizabeth Csaki**	TYPED NAME Michael A. Pastor
TITLE **Procurement Manager**	TITLE Chairman, Gila County Board of Supervisors
DATE 6/6/2011	DATE 5/3/11

IN ACCORDANCE WITH ARS §11-952 THIS CONTRACT AMENDMENT HAS BEEN REVIEWED BY THE UNDERSIGNED WHO HAVE DETERMINED THAT THIS CONTRACT AMENDMENT IS IN APPROPRIATE FORM AND WITHIN THE POWERS AND AUTHORITY GRANTED TO EACH RESPECTIVE PUBLIC BODY.

ARIZONA ATTORNEY GENERAL'S OFFICE

By: Barbara McBehan
Assistant Attorney General

Date: 6/2/11

By:
Public Agency Legal Counsel
Bryan B. Chambers
Chief Deputy County Attorney

Date: 5.3.2011

ITEMIZED SERVICE BUDGET
FOR CONTRACT SERVICE: Case Management
PROVIDER NAME: Gila County Community Action Program
CONTRACT PERIOD: 7-01-10 TO 6-30-11
Attachment A

1 PERSONNEL

Number of Positions	FTE Level	Position Title	Salary for Contract Period	% Allocated to Service A+ D = Total		Total Service Cost	DES Cost
1	1	Divisional Fiscal Manager	$53,893	50%+0=50%	50%	$ 26,947	$ 26,947
1	1	Divisional Accountant	$35,422	50%+0=50%	50%	$ 17,711	$ 17,711
1	1	Program Manager	$47,632	25%+25=50%	50%	$ 23,816	$ 11,908
1	1	Case Manager	$30,534	0%+50%=50%	50%	$ 15,267	$ 15,267
1	1	Case Manager	$32,094	0%+50%=50%	50%	$ 16,047	$ 16,047
1	1	Clerk	$21,091	0%+50%=50%	50%	$ 10,546	$ 10,545
TOTAL PERSONNEL COST:						**$ 110,334**	**$ 98,425**

2 EMPLOYEE RELATED EXPENSES

Item	Basis			Service Cost	DES Cost
Health Insurance	$595.83 per mo x 12 mo X 1 @ 25%			$ 1,787	$ 1,787
	$595.83 per mo x 12 mo X 5 @ 50%			$ 17,875	$ 17,875
FICA	0.0765	X	$110,334	$ 8,441	$ 4,220
Workman's Comp	0.003	X	$110,334	$ 331	$ 166
Retirement	0.0985	X	$110,334	$ 10,868	$ 5,434
TOTAL ERE COST:				**$ 39,302**	**$ 29,482**

3 PROFESSIONAL AND OUTSIDE SERVICES

Item	Basis	Service Cost	DES Cost
N/A		$ -	$ -
TOTAL PROF & OUTSIDE COSTS:		**$ -**	**$ -**

4 TRAVEL

Item	Basis	Service Cost	DES Cost
Gas/Vehicles/Maint	$225 per month x 12 months	$ 2,700	$ 2,262
Per Diem	$42 per day for 20 days for 5 FTE's	$ 4,200	$ 3,326
TOTAL TRAVEL COSTS:		**$ 6,900**	**$ 5,588**

5 SPACE

Item	Basis	Service Cost	DES Cost
Rent - Globe Office	Rent $1,673 monthly X 12 months (Inclused elctricity, cleaning, water, etc.)	$ 20,076	$ 10,038
Sparkletts/Other Space Expense	$100 x 12 months	$ 1,200	$ 240
TOTAL SPACE COSTS:		**$ 21,276**	**$ 10,278**

6 EQUIPMENT

Item	Basis	Service Cost	DES Cost
N/A		$ -	$ -
TOTAL EQUIPMENT COSTS:		**$ -**	**$ -**

7 MATERIALS & SUPPLIES

Item	Basis	Service Cost	DES Cost
General Office Supplies	$200 per month x 6 FTE's x 12 months	$ 14,400	$ 10,800
Postage	$250 per month x 12 months	$ 3,000	$ 1,200
TOTAL MAT & SUPP COSTS:		**$ 17,400**	**$ 12,000**

8 OPERATING SERVICES

Item	Basis	Service Cost	DES Cost
Staff Training & Registration	$1000 for training sessions for 3 FTE's	$ 3,000	$ 3,000
	$1500 for out of state training for 2 FTE's (inlcudes flight, hotel & registration)	$ 3,000	$ 3,000
Printing, Publishing & Advertising Costs	4 publications @ $200 in local papers	$ 800	$ 160
Local Fax, 800 Line, Phone Line & Service Maintenance, Leases Agreements & Memberships/Dues	$1,713.30 x 12 months	$ 20,560	$ 9,763
TOTAL OPERATING SERVICE COSTS:		**$ 27,360**	**$ 15,923**

9 INDIRECT COSTS

Item	Basis	Service Cost	DES Cost
N/A		$ -	$ -
TOTAL INDIRECT COSTS:		**$ -**	**$ -**

10	**SUBTOTAL ADMINISTRATIVE COSTS:**	**$ 222,572**	**$ 171,696**

11 VOUCHERS

Item			Service Cost	DES Cost
1	LIHEAP	*77*	$ 235,210	$ 235,210
2	LIHCON	*78*	$ 28,172	$ 28,172
3	LLVG		$ 8,259	$ 8,259
4	NHN	*70*	$ 865	$ 865
5	TANF	*49*	$ 30,113	$ 30,113
6	ESG	*17*	$ 6,659	$ 6,659
TOTAL VOUCHER COSTS:			**$ 309,278**	**$ 309,278**

12	TOTAL COSTS:	$ 531,850	$ 480,974

REVENUE SOURCES:		
DES Case Mgt.	$ 480,974	$ 480,974
Gila County	$ 50,876	
TOTAL REVENUE:	**$ 531,850**	**$ 480,974**
TOTAL REVENUE:	**$ 531,850**	**$ 480,974**

CMT-A Case Management ISB 10-11
Submitted 04/23/2010
Revised 3/17/2011

ITEMIZED SERVICE BUDGET
FOR CONTRACT SERVICE: Community Services
PROVIDER NAME: Gila County Community Action Program
CONTRACT PERIOD: 7-01-10 TO 6-30-11
Attachment B

1 PERSONNEL

Number of Positions	FTE Level	Position Title	Salary for Contract Period	% Allocated to Service A+ D = Total		Total Service Cost	DES Cost
1	1	Community Services Director	$81,994	50%+0=50%	50%	$ 40,997	$ 4,100
1	1	Community Services Deputy Director	$67,309	50%+0=50%	50%	$ 33,655	$ 3,365
1	1	Divisional Program Manager	$55,245	50%+0=50%	50%	$ 27,623	$ 5,524
1	1	Divisional Special Projects	$27,908	50%+0=50%	50%	$ 13,954	$ 5,582
1	1	Divisional Assistant	$32,885	50%+0=50%	50%	$ 16,443	$ 6,577
1	1	Program Manager	$47,632	25%+25=50%	50%	$ 23,816	$ 23,816
1	1	Case Manager	$30,534	0%+50%=50%	50%	$ 15,267	$ 15,267
1	1	Case Manager	$32,094	0%+50%=50%	50%	$ 16,047	$ 16,047
1	1	Clerk	$21,091	0%+50%=50%	50%	$ 10,546	$ 10,546
TOTAL PERSONNEL COST:						**$ 198,348**	**$ 90,824**

2 EMPLOYEE RELATED EXPENSES

Item	Basis			Service Cost	DES Cost
Health Insurance	$595.83 per mo x 12 mo X 2 @ 5%			$ 715	$ 715
	$595.83 per mo x 12 mo X 1 @ 10%			$ 715	$ 715
	$595.83 per mo x 12 mo X 2 @ 20%			$ 2,860	$ 2,860
	$595.83 per mo x 12 mo X 4 @ 50%			$ 14,300	$ 14,300
FICA	0.0765	X	$198,348	$ 15,174	$ 7,587
Workman's Comp	0.003	X	$198,348	$ 595	$ 298
Retirement	0.0985	X	$198,348	$ 19,537	$ 9,769
TOTAL ERE COST:				**$ 53,896**	**$ 36,244**

3 PROFESSIONAL AND OUTSIDE SERVICES

Item	Basis	Service Cost	DES Cost
N/A		$ -	$ -
TOTAL PROF & OUTSIDE COSTS:		**$ -**	**$ -**

4 TRAVEL

Item	Basis	Service Cost	DES Cost
Gas/Vehicles/Maint	$500 per month x 12 months	$ 6,000	$ 5,700
Per Diem	$42 per day for 20 days for 5 FTE's	$ 4,200	$ 2,632
TOTAL TRAVEL COSTS:		**$ 10,200**	**$ 8,332**

5 SPACE

Item	Basis	Service Cost	DES Cost
N/A		$ -	$ -
TOTAL SPACE COSTS:		**$ -**	**$ -**

6 EQUIPMENT

Item	Basis	Service Cost	DES Cost
N/A		$ -	$ -
TOTAL EQUIPMENT COSTS:		**$ -**	**$ -**

7 MATERIALS & SUPPLIES

Item	Basis	Service Cost	DES Cost
N/A		$ -	$ -
TOTAL MAT & SUPP COSTS:		**$ -**	**$ -**

8 OPERATING SERVICES

Item	Basis	Service Cost	DES Cost
Staff Training & Registration	$500 for training sessions for 2 FTE's @ 100%	$ 1,000	$ 1,000
Local Fax, 800 Line, Phone Line & Service Maintenance, Leases Agreements & Memberships/Dues	$1,000 x 12 months	$ 12,000	$ 3,600
TOTAL OPERATING SERVICE COSTS:		**$ 13,000**	**$ 4,600**

9 INDIRECT COSTS

Item	Basis	Service Cost	DES Cost
N/A		$ -	$ -
TOTAL INDIRECT COSTS:		**$ -**	**$ -**

10	**SUBTOTAL ADMINISTRATIVE COSTS:**	**$ 275,444**	**$ 140,000**

11 VOUCHERS

Item		Service Cost	DES Cost
Vouchers - Direct Client Services	Average $500 x 46 households	$ 23,557	$ 23,557
TOTAL VOUCHER COSTS:	Average $557 x 1 household	**$ 23,557**	**$ 23,557**

12	**TOTAL COSTS:**	**$ 299,001**	**$ 163,557**

REVENUE SOURCES:		
DES CSV	$ 163,557	$ 163,557
Gila County	$ 135,444	
TOTAL REVENUE:	**$ 299,001**	**$ 163,557**
TOTAL REVENUE:	**$ 299,001**	**$ 163,557**

CSV-B ISB 10-11
Submitted 04/23/10
Revised 3/17/2011

ITEMIZED SERVICE BUDGET
FOR CONTRACT SERVICE: Community Services AARA (Stimulus)
PROVIDER NAME: Gila County Community Action Program
CONTRACT PERIOD: 7-01-10 TO 9-30-10
Attachment C

1 PERSONNEL

Number of Positions	FTE Level	Position Title	Salary for Contract Period	% Allocated to Service A+ D = Total	Total Service Cost	DES Cost
N/A					$ -	$ -
TOTAL PERSONNEL COST:					$ -	$ -

2 EMPLOYEE RELATED EXPENSES

Item	Basis	Service Cost	DES Cost
N/A		$ -	$ -
TOTAL ERE COST:		$ -	$ -

3 PROFESSIONAL AND OUTSIDE SERVICES

Item	Basis	Service Cost	DES Cost
N/A		$ -	$ -
TOTAL PROF & OUTSIDE COSTS:		$ -	$ -

4 TRAVEL

Item	Basis	Service Cost	DES Cost
N/A		$ -	$ -
TOTAL TRAVEL COSTS:		$ -	$ -

5 SPACE

Item	Basis	Service Cost	DES Cost
N/A		$ -	$ -
TOTAL SPACE COSTS:		$ -	$ -

6 EQUIPMENT

Item	Basis	Service Cost	DES Cost
N/A		$ -	$ -
TOTAL EQUIPMENT COSTS:		$ -	$ -

7 MATERIALS & SUPPLIES

Item	Basis	Service Cost	DES Cost
Outreach/media materials & supplies for clients for CARE Fair and EITC activities.	Approx $52.50 x 150 individuals for both activites	$ 7,875.13	$ 7,875.13
TOTAL MAT & SUPP COSTS:		$ 7,875.13	$ 7,875.13

8 OPERATING SERVICES

Item	Basis	Service Cost	DES Cost
N/A		$ -	$ -
TOTAL OPERATING SERVICE COSTS:		**$ -**	**$ -**

9 INDIRECT COSTS

Item	Basis	Service Cost	DES Cost
N/A		$ -	$ -
TOTAL INDIRECT COSTS:		**$ -**	**$ -**

10	SUBTOTAL ADMINISTRATIVE COSTS:	$ 7,875.13	$ 7,875.13

11 VOUCHERS

Item		Service Cost	DES Cost
Vouchers - Direct Client Services	Average $500 x 27 households	$ 13,500	$ 13,500
TOTAL VOUCHER COSTS:		**$ 13,500**	**$ 13,500**

12	TOTAL COSTS:	$ 21,375.13	$ 21,375.13

REVENUE SOURCES:

CPIP CSV	$ 21,375.13	$ 21,375.13
TOTAL REVENUE:	**$ 21,375.13**	**$ 21,375.13**

TOTAL REVENUE:	**$ 21,375.13**	**$ 21,375.13**

CSV-C ISB 10-11
Submitted 07/08/10
Revised 12/07/10

DEPARTMENT OF ECONOMIC SECURITY
Your Partner For A Stronger Arizona

INTERGOVERNMENTAL AGREEMENT (IGA)

Contract between the Arizona Department of Economic Security ("ADES") and the Gila County Division of Health & Community Services("Contractor").

WHEREAS the Department is duly authorized to execute and administer contracts under A.R.S §41-1954 and,

WHEREAS the Contractor is duly authorized to execute and administer contracts under ~~Insert Contractor Authority Here~~ A.R.S §11-201 et. seq. and A.R.S §11-251 et. seq. and,

WHEREAS the Department and the Contractor are authorized by A.R.S. §11-952 et seq. to enter into agreements for joint or cooperative action to contract for the services specified in this contract.

THEREFORE, the Department and Contractor agree to abide by all the terms and conditions set forth in this Contract.

BY SIGNING THIS FORM ON BEHALF OF THE CONTRACTOR, THE SIGNATORY CERTIFIES HE/SHE HAS THE AUTHORITY TO BIND THE CONTRACTOR TO THIS CONTRACT.

FOR AND ON BEHALF OF THE ARIZONA DEPARTMENT OF ECONOMIC SECURITY

Procurement Officer Signature

Printed Name Elizabeth G. Csaki, CPPB

Title Professional Services Procurement Manager

Date 8/18/2010

DE111073-001
ADES Contract Number

FOR AND ON BEHALF OF THE GILA COUNTY DIVISION OF HEALTH & COMMUNITY SERVICES

Signature

Michael A. Pastor
Printed Name

Chairman, Board of Supervisors
Title

7/6/10
Date

IN ACCORDANCE WITH A.R.S. §11-952 THIS CONTRACT HAS BEEN REVIEWED BY THE UNDERSIGNED WHO HAVE DETERMINED THAT THIS CONTRACT IS IN APPROPRIATE FORM AND WITHIN THE POWERS AND AUTHORITY GRANTED TO EACH RESPECTIVE PUBLIC BODY.

ARIZONA ATTORNEY GENERAL'S OFFICE

By: *Assistant Attorney General*

Date: 8/16/10

By: *Public Agency Legal Counsel*
Bryan Chambers, Chief Deputy Gila Co. Attorney

Date: 6-23-2010

TERMS AND CONDITIONS

1.0 Parties

1.1 This Intergovernmental Agreement (IGA) is between the Arizona Department of Economic Security (ADES), and the Gila County Division of Health & Community Services .

2.0 Term of Agreement and Option to Extend

2.1 **Term** - See section 5.0 Contract Term in the Scope of Work.

2.1.1 The parties agree that if similar services were provided by the Contractor prior to the date of last signature, but no earlier than July 1, 2010, those services may be compensated under this agreement.

2.1.2 The parties agree that if similar services were provided by the Contractor after the end date of the contract, those services shall not be compensated under this agreement.

2.2. **Extension**

2.2.1 This agreement may be extended through a written amendment by mutual agreement of the parties.

3.0 Purpose of Agreement

3.1 The purpose of this agreement is to contract for services which address the causes of poverty in local areas and to provide emergency services which alleviate crisis situations.

4.0 Definitions

4.1 *"Contract Amendment"* means a written document signed by the Procurement Officer that is issued for the purpose of making changes in the Contract.

4.2 *"Contractor"* means any person who has a Contract with the State.

4.3 *"Days"* means calendar days unless otherwise specified.

4.4 *"Department"* means the Arizona Department of Economic Security or ADES, unless otherwise indicated.

4.5 *"Equipment"* means all vehicles, furniture, machinery, electronic data processing (EDP) equipment, software and all other equipment costing $10,000.00 or more, including all normal and necessary expenses incurred to make the equipment ready for its intended use (e.g., axes, freight, installation, assembly and testing charges, etc.), and with a useful life of greater than one year. Equipment as used herein does not include real property (e.g., land, building, structures, or facilities' improvements).

4.6 *"Exhibit"* means any item labeled as an Exhibit.

4.7 *"Gratuity"* means a payment, loan, subscription, advance, deposit of money, services, or anything of more than nominal value, present or promised, unless consideration of substantially equal or greater value is received.

4.8 *"Materials"* means all property, including equipment, supplies, printing, insurance and leases of property but does not include land, a permanent interest in land or real property or leasing space.

4.9 *"May"* indicates something that is not mandatory but permissible.

4.10 *"Procurement Officer"* means the person, or his or her designee, duly authorized by the State to enter into and administer Contracts and make written determinations with respect to the Contract.

4.11 *"Services"* means the furnishing of labor, time or effort by a contractor or subcontractor which does not involve the delivery of a specific end product other than required reports and performance, but does not include employment agreements or collective bargaining agreements.

4.12 Shall, Must" indicates a mandatory requirement.

4.13 "Should" indicates something that is recommended but not mandatory. If the Contractor fails to provide recommended information, the State may, at its sole option, ask the Contractor to provide the information.

4.14 *"Subcontract"* means any Contract, expressed or implied, between the Contractor and another party or between a subcontractor and another party delegating or assigning, in whole or in part, the making or furnishing of any material or any service required for the performance of the Contract.

4.15 *"State"* means the State of Arizona and Department or Agency of the State that executes the Contract.

4.16 *"State Fiscal Year"* means the period beginning with July 1 and ending June 30.

4.17 "Vulnerable adult" means an individual who is eighteen years of age or older who is unable to protect himself from abuse, neglect or exploitation by others because of a physical or mental impairment.

5.0 Manner of Financing

5.1 See section 4.0 Funding in the Scope of Work.

6.0 Service Descriptions

6.1 See Scope of Work for descriptions of each service.

7.0 Responsibilities

7.1 The ADES and the Contractor agree to comply with the Scope of Work, Administrative Methodology and Service Methodologies.

7.2 Services will be provided at the locations identified on the Facility Location Chart.

8.0 Advertising, Publishing and Promotion of Contract.

8.1 The Contractor shall provide to the Department for review and approval all reports or publications (written, visual or sound) that are funded or partially funded under this contract, a minimum of fifteen (15) calendar days prior to public release. All reports and publications whether written, visual or verbal shall contain the following statement: "This program was funded through a contract with the Arizona Department of Economic Security points of view are those of the author and do not necessarily represent the official position or policies of the Department."

9.0 Amendments or Modifications

9.1 This Agreement may be amended or modified at any time by mutual agreement. No agent, employee or other representative of either party is empowered to alter any of the terms of the agreement, unless done in writing and signed by the authorized representative of the respective parties.

9.2 Either party shall give written notice to the other party of any non-material alteration that affects the provisions of this Agreement. Non-material alterations that do not require a written amendment are as follows:

9.2.1 Change of telephone number;

9.2.2 Change in authorized signatory; and/or

9.2.3 Change in the name and/or address of the person to whom notices are to be sent.

9.3 This Contract is issued under the authority of the Procurement Officer who signed this Contract. The Contract may be modified only through a Contract Amendment within the scope of the Contract. Changes to the Contract, including the addition of work or materials, the revision of payment terms, or the substitution of work or materials, directed by a person who is not specifically authorized by the Procurement Officer in writing or made unilaterally by the Contractor are violations of the Contract and of applicable law. Such changes, including unauthorized written Contract Amendments shall be void and without effect, and the Contractor shall not be entitled to any claim under this Contract based on those changes.

10.0 Applicable Law

10.1 This Agreement shall be governed and interpreted by the laws of the State of Arizona.

10.2 The materials and services supplied under this Agreement shall comply with all applicable Federal, state and local laws, and the Contractor shall maintain all applicable license and permit requirements.

10.3 Nothing in this contract shall be construed as a waiver of an Indian tribe's sovereign immunity; nothing shall be construed as an Indian tribe's consent to be sued or as consent by an Indian tribe to the jurisdiction of any State Court.

10.4 The Contractor shall comply with the requirements related to reporting to a peace officer or child protective services incidents of crimes against children as specified in A.R.S. §13-3620 as may be amended .

10.5 The Contractor shall comply with P.L. 101-121, Section 319 (31 U.S.C. section 1352) as may be amended and 29 C.F.R. Part 93 as may be amended which prohibit the use of federal funds for lobbying and which state, in part: Except with the express authorization of Congress, the Contractor, its employees or agents, shall not utilize any federal funds under the terms of this contract to solicit or influence, or to attempt to solicit or influence, directly or indirectly, any member of Congress regarding pending or prospective legislation. Indian tribes, tribal organizations and any other Indian organizations are exempt from these lobbying restrictions with respect to expenditures that are specifically permitted by other federal law.

10.6 The Contractor shall comply with all applicable state and federal statutes and regulations. This shall include A.R.S. § 23-722.01 as may be amended relating to new hire reporting, A.R.S. § 23-722.02 as may be amended relating to wage assignment orders to provide child support, and A.R.S. § 25-535 as may be amended relating to administrative or court-ordered health insurance coverage for children.

10.7 The Arizona law applies to this Contract including, where applicable, the Uniform Commercial Code as adopted by the State of Arizona.

10.8 Implied Contract Terms. Each provision of law and any terms required by law to be in this Contract are a part of this Contract as if fully stated in it.

10.9 The Contractor shall comply with P. L. 105-285, Section 678F(a) which prohibits the use of funds for the purchase of improvement of land, or purchase, construction or permanent improvement (other than low-cost residential weatherization or other energy-related home repairs) of any building or other facility.

10.10 The Contractor shall comply with P.L. 105-285, Section 678F(b) which prohibits the use of CSBG funds for the provision of services or the employment or assignment of personnel in a manner supporting any bi-partisan or non-partisan political activity or any political activity associated with a candidate, or contending faction or group, in an election for public or party office; any activity to provide transportation to the polls or similar assistance in connection with and such election, any voter registration activity.

11.0 Arbitration

11.1 In accordance with A.R.S. § 12-1518 as may be amended, the parties agree to resolve all disputes arising out of or relating to this Agreement through arbitration, after exhausting applicable administrative review except as may be required by other applicable statutes.

12.0 Assignment and Delegation.

12.1 The Contractor shall not assign any right nor delegate any duty under this Contract without the prior written approval of the Procurement Officer. The State shall not unreasonably withhold approval.

13.0 Audit

13.1 In accordance with A.R.S. §35-214, the Contractor shall retain and shall contractually require each subcontractor to retain all data, books and other records ("records") relating to this Agreement for a period of five (5) years after the completion of the Agreement. All records shall be subject to inspection and audit by the State, and where applicable the Federal Government, at reasonable times, and to the extent that the books and records relate to the performance of the Contracts or subcontract. Upon request, Contractor shall produce the original of any or all such records.

13.2 In compliance with the Federal Single Audit Act (31 U.S.C. Sections 7501-7507 as may be amended), Contractors designated as subrecipients, as described in the Office of Management and Budget (OMB) Circular A-133, expending Federal funds from all sources totaling $500,000 or more, shall have a yearly audit conducted in accordance with the audit and reporting standards as prescribed in OMB Circular A-133 (A-133) as may be amended. As outlined in A-133 the audit Reporting Package shall include:

13.2.1 Financial statements and a Schedule of Expenditures of Federal Awards (SEFA)

13.2.2 Summary schedule of prior audit findings

13.2.3 Auditor's Reports (detailed in the A-133)

13.2.4 Corrective Action Plan.

13.3 The Department's contract numbers and award amounts shall be included on the SEFA. A copy of the Single Audit Reporting Package and Management Letter, if issued, shall be submitted to the Department's Office of Audit and Management Services within thirty (30) days after completion of the audit or nine (9) months after the audited period and to the Department's person designated to receive notices as specified in the section 7.0 General Reporting Requirements in the Scope of Work.

13.4 All Contractors are subject to the programmatic and fiscal monitoring requirements of each Department program to ensure accountability of the delivery of all goods and services, as required under the Federal Single Audit Act. A minimum fiscal requirement for all Contractors designated as vendors is an annual financial audit which includes Department contract numbers and award amounts. The Audit Report, Management Letter, if issued, and Auditor's Opinion shall be submitted within thirty (30) days after completion of the audit to the Department's person designated to receive notices as specified in the Reports Section in the Scope of Work.

13.5 As prescribed in OMB Circular A-133, for-profit subrecipients are subject to compliance requirements established by the Department. Methods to ensure compliance for Federal awards made to for-profit subrecipients may include pre-award audits, Department monitoring during the contract, and post-award audits.

13.6 Audits of non-profit corporations receiving Federal or State monies required pursuant to Federal or State law shall be conducted as provided in 31 U.S.C. Section 7501 et seq. and A.R.S. Section 35-181.03 as may be amended and any other applicable statutes, rules, regulations and standards.

14.0 Availability of Funds for the Current State Fiscal Year

14.1 Should the State Legislature enter back into session and reduce the appropriations or for any reason and these goods or services are not funded, the ADES may take any of the following actions:

14.1.1 Reduce payments or units authorized;

14.1.2 Accept a decrease in price offered by the Contractor;

14.1.3 Cancel the Agreement; or

14.1.4 Cancel the Agreement and re-solicit the requirements.

14.1.5 The Director of ADES shall have the sole and unfettered discretion in determining the availability of funds. The ADES and the Contractor may mutually agree to reduce reimbursement to the Contractor when the payment type is Fixed Price with Price Adjustment by executing an amendment to this Agreement.

15.0 Availability of Funds for the Next State Fiscal Year

15.1 Funds may not presently be available for performance under this Agreement beyond the current state fiscal year. If funds are not allocated and available for the continuance of this Agreement, this Agreement may be terminated by the ADES at the end of the period for which funds are available.

15.2 No liability shall accrue to the ADES in the event this provision is exercised, and the ADES shall not be obligated or liable for any future payments of for any damages as a result of termination under this paragraph.

16.0 Background Checks for Employment through the Central Registry

16.1 If providing direct services to children or vulnerable adults, the following shall apply:

16.1.1 The provisions of A.R.S. § 8-804 (as may be amended) are hereby incorporated in its entirety as provisions of this Contract.

16.1.2 Background checks through the Central Registry shall be conducted for each Contract employee including subcontractors that provide direct services to children or vulnerable adults. Individuals shall not provide direct services to ADES clients until the results of the Central Registry background check are complete and the results indicate the individual has no disqualifying acts that would prohibit him/her from providing services to ADES clients. If the Central Registry background check specifies any disqualifying act, the individual shall be prohibited from providing direct services to ADES clients. These requirements shall apply throughout the full term of the contract.

16.1.3 The Contractor shall maintain the Central Registry Background Check results in a confidential file for five (5) years after termination of the Contract.

17.0 Certification of Cost or Pricing Data

17.1 The Contractor certifies that, to the best of the Contractor's knowledge and belief, any cost or pricing data submitted is accurate, complete and current as of the date submitted or other mutually agreed upon date. Furthermore, the price to the State shall be adjusted to exclude any significant amounts by which the State finds the price was increased because the Contractor-furnished cost or pricing data was inaccurate, incomplete or not current as of the date of submittal. Such adjustment by the State may include overhead, profit or fees.

18.0 Certification Regarding Lobbying

18.1 The Contractor agrees to comply with 49 CFR part 20.

19.0 Confidentiality

19.1 The Contractor shall observe and abide by all applicable State and federal statutes, rules and regulations regarding the use or disclosure of information including, but not limited to, information concerning applicants for and recipients of contract services. To the extent permitted by law, the Contractor shall release information to the Department and to the Attorney General's Office as required by the terms of this contract, by law or upon their request.

20.0 Code of Conduct

20.1 The Contractor shall avoid any action that might create or result in the appearance of:

20.1.1 Inappropriate use or divulging of information gathered or discovered pursuant to the performance of its duties under the contract;

20.1.2 Acting on behalf of the State without appropriate authorization;

20.1.3 Provided favorable or unfavorable treatment to anyone;

20.1.4 Made a decision on behalf of the State that exceeded its authority, could result in partiality, or have a political consequence for the State;

20.1.5 Misrepresent or otherwise impeded the efficiency, authority, actions, policies, or adversely affect the confidence of the public or integrity of the State; or,

20.2.6 Loss of impartiality when advising the State.

21.0 Competitive Bidding

21.1 The Contractor is authorized to purchase the supplies and equipment itemized in the contract for utilization in the delivery of contract services. Contractor shall procure all such supplies and equipment at the lowest

practicable cost and shall purchase all non-expendable items having a useful life of more than one year and an acquisition cost of $1,000 or more, through generally accepted and reasonable competitive bidding processes. Any procurement in violation of this provision shall be considered a financial audit exception.

22.0 Conflict of Interest

22.1 In accordance with A.R.S. §38-511 as may be amended, the State may within three years after execution cancel the Agreement, without penalty or further obligation, if any person significantly involved in initiating, negotiating, securing, drafting or creating the Agreement on behalf of the State, at any time while the Agreement is in effect, becomes an employee or agent of any other party to the Agreement in any capacity or a consultant to any other party to the Agreement with respect to the matter of the Agreement.

23.0 Cooperation

23.1 The Department may undertake or award other contracts for additional work related to the work performed by the Contractor, and the Contractor shall fully cooperate with such other Contractors and State employees, and carefully fit its own work to such other Contractors' work. The Contractor shall not commit or permit any act which will interfere with the performance of work by any other Contractor or by State employees. The Contractor shall cooperate as the State deems necessary, with the transfer of work, services, case records and files performed or prepared by the Contractor to other Contractor(s).

24.0 Data Sharing Agreement

24.1 When determined by the Department that sharing of confidential data will occur with the Contractor, the Contractor shall complete the ADES Data Sharing Request Agreement and submit the completed Agreement to the ADES Program Designated Staff prior to any work commencing or data shared. A separate Data Sharing Request Agreement shall be required between the Contractor and each ADES Program sharing confidential data.

25.0 Disposition of Property

25.1 If the Contractor is authorized to purchase Equipment, it shall be itemized in the contract for utilization in the delivery of contract services. If Equipment is purchased as authorized by this contract, the Contractor shall maintain complete and up-to-date inventory records for all Equipment purchased hereunder. Equipment specifically designated within this contract, to be purchased in whole or part with the Department funds, shall be reported in accordance with Department inventory policies and procedures. The Contractor shall report Equipment purchased with contract funds to the Department within thirty (30) days of purchase, perform an annual inventory of all equipment purchased with Department funds and submit the Equipment inventory form to the Department person designated to receive notices.

25.2 The Department shall retain an equitable interest equal to the purchase price paid, or a fair estimate or appraisal of current market value, whichever is greater, in all Equipment purchased under this contract. The Department shall be included as a co-insured on any insurance policy which covers Equipment purchased under this contract.

25.3 The Contractor shall not dispose of any Equipment purchased under this contract without the prior written consent of the Department during and after the contract term. Such consent, if given, may include direction as to the means of disposition and the utilization of proceeds, including any necessary adjustments to the contract.

25.4 Upon termination of this contract, any Equipment purchased under this contract shall be disposed of as directed by the Department and, if sold, the Department shall be compensated in the amount of its equitable interest.

26.0 Eligibility for State or Local Public Benefits; Documentation and Violations

26.1 Contractors providing services as an agent of the State, shall ensure compliance with A.R.S. §1-502 as may be amended. A.R.S. §1-502 requires each person applying or receiving a public benefit to provide documented proof which demonstrates a lawful presence in the United States. The State shall reserve the right to conduct unscheduled, periodic process and documentation audits to ensure contractor compliance. All available contract remedies, up to and including termination may be taken for failure to comply with A.R.S. §1-502 as may be amended in the delivery of services under this contract.

27.0 Evaluation

27.1 The Department may evaluate, and the Contractor shall cooperate in the evaluation of, contract services. Evaluation may assess the quality and impact of contract services, either in isolation or in comparison with

other similar services, and assess the Contractor's progress and/or success in achieving the goals, objectives and deliverables set forth in this contract.

27.2 As requested by the Department, the Contractor shall participate in third party evaluations relative to contract impact in support of Department goals.

28.0 E-Verify

28.1 In accordance with ARS §41-4401 as may be amended, Contractor warrants compliance with all Federal immigration laws and regulations relating to employees and warrants its compliance with AAC Section A.R.S. § 23-214, Subsection A.

29.0 Fair Hearings and Service Recipients' Grievances

29.1 The Contractor shall advise all applicants for and recipients of contract services of their right, at any time and for any reason, to present to the Contractor and to the Department any grievances arising from the delivery of contract services, including, but not limited to, ineligibility determination, reduction of services, suspension or termination of services, or quality of services. The Department may assert its jurisdiction to hear the grievance or refer the matter to the appropriate authority.

29.2 The Contractor, whenever authorized by law, shall maintain a formal system acceptable to and approved by the Department for reviewing and adjudicating grievances by service recipients or subcontractors arising from this contract.

30.0 Federal Immigration and Nationality Act

30.1 By entering into the Agreement, the Contractor warrants compliance with the Federal Immigration and Nationality Act. (FINA) and all other Federal immigration laws and regulations related to the immigration status of its employees. The Contractor shall obtain statements from its subcontractors certifying compliance and shall furnish the statements to the Procurement Officer upon request. These warranties shall remain in effect through the term of the Agreement. The Contractor and its subcontractors shall also maintain Employment Eligibility Verification forms (I-0) as required by the U.S. Department of Labor's Immigration and Control Act, for all employees performing work under the Agreement. I-9 forms are available for download at USCIS.GOV.

30.2 The State may request verification of compliance for any Contractor or subcontractor performing work under the Agreement. Should the State suspect or find that the Contractor or any of its subcontractors are not in compliance, the State may pursue any and all remedies allowed by law, including, but not limited to suspension of work, termination of the Agreement for default, and suspension and/or debarment of the Contractor. All costs necessary to verify compliance are the responsibility of the Contractor.

31.0 Fees and Program Income

31.1 Unless specifically authorized in the contract, the Contractor shall impose no fees or charges of any kind upon recipients for contract services.

32.0 Fingerprinting

32.1 The provisions of A.R.S. § 46-141 (as may be amended) are hereby incorporated in their entirety as provisions of this contract. For reference, these provisions include, but are not limited to, the following:

32.1.1 Personnel who are employed by the Contractor, whether paid or not, and who are required or allowed to provide services directly to juveniles or vulnerable adults shall submit a full set of fingerprints to the Department for the purpose of obtaining a state and federal criminal records check pursuant to section 41-1750 and Public Law 92-544 or shall apply for fingerprint clearance card within seven working days of employment.

32.1.2 The Contractor shall assume the costs of fingerprint checks and may charge these costs to its fingerprinted personnel. The Department may allow all or part of the costs of fingerprint checks to be included as an allowable cost in a contract.

32.1.3 Except as provided in A.R.S. § 46-141, this contract may be cancelled or terminated immediately if a person employed by the Contractor and who has contact with juveniles certifies pursuant to the provisions of A.R.S. § 46-141 (as may be amended) that the person is awaiting trial or has been convicted of any of the offenses listed therein in this State, or of acts committed in another state that would be offenses in this State, or if the person does not possess or is denied issuance of a valid fingerprint clearance card.

32.1.4 Personnel who are employed by any Contractor whether paid or not, and who are required or allowed to provide services directly to juveniles shall certify on forms provided by the Department of Economic Security and notarized whether they are awaiting trial on or have ever been convicted of any of the offenses described in A.R.S. § 46-141 (as may be amended).

32.1.5 Personnel who are employed by any Contractor, whether paid or not, and who are required or allowed to provide services directly to juveniles shall certify on forms provided by the Department of Economic Security and notarized whether they have ever committed any act of sexual abuse of a child, including sexual exploitation and commercial sexual exploitation, or any act of child abuse.

32.1.6 Federally recognized Indian tribes or military bases may submit and the Department of Economic Security shall accept certifications that state that no personnel who are employed or who will be employed during the contract term have been convicted of, have admitted committing or are awaiting trial on any offense as described in A.R.S. § 46-141 (H) (as may be amended).

33.0 **Force Majeure**

33.1 Except for payment of sums due, neither party shall be liable to the other nor deemed in default under this Agreement if and to the extent that such party's performance of this Agreement is prevented by reason of force majeure. The term *"force majeure"* means an occurrence that is beyond the control of the party affected and occurs without its fault or negligence. Without limiting the foregoing, force majeure includes acts of God; acts of the public enemy; war; riots; strikes; mobilization; labor disputes; civil disorders; fire; flood; lockouts; injunctions-intervention-acts; or failures or refusals to act by government authority; and other similar occurrences beyond the control of the party declaring force majeure which such party is unable to prevent by exercising reasonable diligence.

33.2 Force Majeure shall not include the following occurrences:

33.2.1 Late delivery of equipment or materials caused by congestion at a manufacturer's plant or elsewhere, or an oversold condition of the market;

33.2.2 Late performance by a subcontractor unless the delay arises out of a force majeure occurrence in accordance with this force majeure term and condition; or

33.2.3 Inability of either the Contractor or any subcontractor to acquire or maintain any required insurance, bonds, licenses or permits.

33.3 If either party is delayed at any time in the progress of the work by force majeure, the delayed party shall notify the other party in writing of such delay, as soon as is practicable and no later than the following working day, of the commencement thereof and shall specify the causes of such delay in such notice. Such notice shall be delivered or mailed certified-return receipt and shall make a specific reference to this article, thereby invoking its provisions. The delayed party shall cause such delay to cease as soon as practicable and shall notify the other party in writing when it has done so. The time of completion shall be extended by Contract Amendment for a period of time equal to the time that results or effects of such delay prevent the delayed party from performing in accordance with this Contract.

33.4 Any delay or failure in performance by either party hereto shall not constitute default hereunder or give rise to any claim for damages or loss of anticipated profits if, and to the extent that such delay or failure is caused by force majeure.

34.0 Inclusive Contractor

34.1 Contractor is encouraged to make every effort to utilize subcontractors that are small, women-owned and/or minority owned business enterprises. This could include subcontractors for a percentage of the administrative or direct service being proposed. Contractor who is committing a portion of its work to such subcontractors shall do so by identifying the type of service and work to be performed by providing detail concerning the Contractor's utilization of small, women-owned and/or minority business enterprises. Emphasis should be placed on specific areas that are subcontracted and percentage of contract utilization and how this effort will be administered and managed, including reporting requirements.

35.0 Indemnification

35.1 Indemnification for Contractor:

35.1.1 Each Party (as "Indemnitor") agrees to indemnify, defend, and hold harmless the other party (as "Indemnitee") from and against any and all claims, losses, liability, costs, or expenses (including reasonable attorney's fees) (hereinafter collectively referred to as "Claims") arising out of bodily injury of any person (including death) or property damage, but only to the extent that such Claims which result in vicarious/derivative liability to the Indemnitee are caused by the act, omission, negligence, misconduct, or other fault of the Indemnitor, its officers, officials, agents, employees, or volunteers.

35.2 Indemnification for Subcontractor

35.2.1 In addition, Gila County Division of Health & Community Services shall cause its contractor(s) and subcontractors, if any, to indemnify, defend, save and hold harmless the State of Arizona, any jurisdiction or agency issuing any permits for any work arising out of this Agreement, and their respective directors, officers, officials, agents, and employees (hereinafter referred to as "Indemnitee") from and against any and

all claims, actions, liabilities, damages, losses, or expenses (including court costs, attorneys' fees, and costs of claim processing, investigation and litigation) (hereinafter referred to as "Claims") for bodily injury or personal injury (including death), or loss or damage to tangible or intangible property caused, or alleged to be caused, in whole or in part, by the negligent or willful acts or omissions of Gila County Division of Health & Community Services's contractor or any of the directors, officers, agents, or employees or subcontractors of such contractor. This indemnity includes any claim or amount arising out of or recovered under the Workers' Compensation Law or arising out of the failure of such contractor to conform to any federal, state or local law, statute, ordinance, rule, regulation or court decree. It is the specific intention of the parties that the Indemnitee shall, in all instances, except for Claims arising solely from the negligent or willful acts or omissions of the Indemnitee, be indemnified by such contractor from and against any and all claims. It is agreed that such contractor will be responsible for primary loss investigation, defense and judgment costs where this indemnification is applicable.

36.0 Insurance Requirements

36.1 Contractor and subcontractors shall procure and maintain until all of their obligations have been discharged, including any warranty periods under this Contract, are satisfied, insurance against claims for injury to persons or damage to property which may arise from or in connection with the performance of the work hereunder by the Contractor, his agents, representatives, employees or subcontractors.

36.2 The *insurance requirements* herein are minimum requirements for this Contract and in no way limit the indemnity covenants contained in this Contract. The State of Arizona in no way warrants that the minimum limits contained herein are sufficient to protect the Contractor from liabilities that might arise out of the performance of the work under this contract by the Contractor, its agents, representatives, employees or subcontractors, and Contractor is free to purchase additional insurance.

A. **Minimum Scope And Limits Of Insurance:** Contractor shall provide coverage with limits of liability not less than those stated below.

1. **Commercial General Liability – Occurrence Form**
   Policy shall include bodily injury, property damage, personal injury and broad form contractual liability.

• General Aggregate	$2,000,000
• Products – Completed Operations Aggregate	$1,000,000
• Personal and Advertising Injury	$1,000,000
• Blanket Contractual Liability – Written and Oral	$1,000,000
• Fire Legal Liability	$ 50,000
• Each Occurrence	$1,000,000

   a. The policy shall be endorsed to **include coverage for sexual abuse and molestation**.

   b. The policy shall be endorsed to include the following additional insured language: ***"The State of Arizona and the Department of Economic Security shall be named as additional insureds with respect to liability arising out of the activities performed by or on behalf of the Contractor".***

   c. Policy shall contain a waiver of subrogation against the State of Arizona, its departments, agencies, boards, commissions, universities and its officers, officials, agents, and employees for losses arising from work performed by or on behalf of the Contractor.

   This requirement may be satisfied with a policy combining General and Professional Liability, provided that the General Liability section of the policy is written on an occurrence basis, and includes coverage for contractual liability.

2. **Business Automobile Liability**
   Bodily Injury and Property Damage for any owned, hired, and/or non-owned vehicles used in the performance of this Contract.

   Combined Single Limit (CSL) $1,000,000

   a. The policy shall be endorsed to include the following additional insured language: ***"The State of Arizona and the Arizona Department of***

Economic Security shall be named as additional insureds with respect to liability arising out of the activities performed by or on behalf of the Contractor, involving automobiles owned, leased, hired or borrowed by the Contractor".

b. Policy shall contain a waiver of subrogation against the State of Arizona, its departments, agencies, boards, commissions, universities and its officers, officials, agents, and employees for losses arising from work performed by or on behalf of the Contractor.

c. This paragraph, **Business Automobile Liability**, shall not be applicable in the event Contractor (or its Subcontractors) does not utilize a vehicle in any manner in the performance of this Contract or if the utilization is used only for commuting purposes. In the event Contractor (or its Subcontractors) subsequently utilizes the vehicle in the performance of the Contract or utilizes it for other than commuting purposes, this paragraph, **Business Automobile Liability**, shall be fully applicable, effective the date the utilization is changed.

3. **Worker's Compensation and Employers' Liability**

• Workers' Compensation	Statutory
• Employers' Liability	
• Each Accident	$ 500,000
• Disease – Each Employee	$ 500,000
• Disease – Policy Limit	$1,000,000

a. Policy shall contain a waiver of subrogation against the State of Arizona, its departments, agencies, boards, commissions, universities and its officers, officials, agents, and employees for losses arising from work performed by or on behalf of the Contractor.

b. This requirement shall not apply to: Separately, EACH contractor or subcontractor exempt under A.R.S. 23-901, AND when such contractor or subcontractor executes the appropriate waiver (Sole Proprietor/Independent Contractor) form.

4. **Professional Liability (Errors and Omissions Liability)**

Each Claim	$1,000,000
Annual Aggregate	$2,000,000

a. In the event that the professional liability insurance required by this Contract is written on a claims-made basis, Contractor warrants that any retroactive date under the policy shall precede the effective date of this Contract; and that either continuous coverage will be maintained or an extended discovery period will be exercised for a period of two (2) years beginning at the time work under this Contract is completed.

b. The policy shall cover professional misconduct or lack of ordinary skill for those positions defined in the Scope of Work of this contract.

B. **Additional Insurance Requirements:** The policies shall include, or be endorsed to include, the following provisions: The State of Arizona and the Arizona Department of Economic Security, wherever additional insured status is required such additional insured shall be covered to the full limits of liability purchased by the Contractor, even if those limits of liability are in excess of those required by this Contract.

1. The Contractor's insurance coverage shall be primary insurance with respect to all other available sources.

2. Coverage provided by the Contractor shall not be limited to the liability assumed under the indemnification provisions of this Contract.

C. **Notice Of Cancellation:** Each insurance policy required by the insurance provisions of this Contract shall provide the required coverage and shall not be suspended, voided, canceled, or reduced in coverage or in limits except after thirty (30) days prior written notice has been given to

the State of Arizona. Such notice shall be sent directly to the **Arizona Department of Economic Security, Office of Procurement, 1789 W. Jefferson St. Site Code 805Z, Phoenix, AZ 85007 unless the Scope of Work General Reporting Requirements specifies otherwise** and shall be sent by certified mail, return receipt requested.

D. **Acceptability Of Insurers:** Insurance is to be placed with duly licensed or approved non-admitted insurers in the state of Arizona with an "A.M. Best" rating of not less than A- VII. The State of Arizona in no way warrants that the above-required minimum insurer rating is sufficient to protect the Contractor from potential insurer insolvency.

If the social services program utilizes the Social Service Contractors Indemnity Pool (SSCIP) or other approved insurance pool for insurance coverage, SSCIP or the other approved insurance pool is exempt from the A.M. Best's rating requirements listed in this contract. If the contractor or subcontractor chooses to use SSCIP or another approved insurance pool as its insurance provider, the contract/subcontract would be considered in full compliance with insurance requirements relating to the A.M. Best rating requirements.

E. **Verification Of Coverage:** Contractor shall furnish the State of Arizona with certificates of insurance (ACORD form or equivalent approved by the State of Arizona) as required by this Contract. The certificates for each insurance policy are to be signed by a person authorized by that insurer to bind coverage on its behalf.

All certificates and endorsements are to be received and approved by the State of Arizona before work commences. Each insurance policy required by this Contract must be in effect at or prior to commencement of work under this Contract and remain in effect for the duration of the project. Failure to maintain the insurance policies as required by this Contract, or to provide evidence of renewal, is a material breach of contract.

All certificates required by this Contract shall be sent directly to **Arizona Department of Economic Security, Office of Procurement, 1789 W. Jefferson St. Site Code 805Z, Phoenix, AZ 85007 unless the Scope of Work General Reporting Requirements specifies otherwise**. The State of Arizona **contract number and contract description shall be noted or referenced on the certificate of insurance**. The State of Arizona reserves the right to require complete, certified copies of all insurance policies required by this Contract at any time. **DO NOT SEND CERTIFICATES OF INSURANCE TO THE STATE OF ARIZONA'S RISK MANAGEMENT SECTION.**

F. **Subcontractors:** Contractors' certificate(s) shall include all subcontractors as insureds under its policies **or** Contractor shall furnish to the State of Arizona separate certificates and endorsements for each subcontractor. All coverages for subcontractors shall be subject to the minimum requirements identified above.

G. **Approval:** Any modification or variation from the *insurance requirements* in this Contract shall be made by the Department of Administration, Risk Management Section, whose decision shall be final. Such action will not require a formal Contract amendment, but may be made by administrative action.

H. **Exceptions:** In the event the Contractor or sub-contractor(s) is/are a public entity, then the Insurance Requirements shall not apply. Such public entity shall provide a Certificate of Self-Insurance. If the contractor or sub-contractor(s) is/are a State of Arizona agency, board, commission, or university, none of the above shall apply.

In the event that Contractor determines that it may not be able to comply fully with the insurance requirements set forth above in Section 36.0 of these Terms and Conditions, the Contractor may request that the insurance requirements be modified pursuant to paragraph 36.2(G), provided that such request be delivered in writing to ADES at least ten days prior to the solicitation due date or, if not a solicitation, prior to contract execution. Contractor shall include with such request Contractor's justification for the modification with supporting documentation.

As provided in paragraph 36.2(G), the Department of Administration, Risk Management Section, shall decide whether such modification may be permitted. If the Department of Administration, Risk Management, decides to grant permission, the ADES Chief Procurement Officer shall then decide whether to approve the modification.

Modifications that are approved will be done so on a case-by-case basis and shall not affect the insurance requirements of other Contractors for whom modifications have not been approved. If a Contractor's request has not been approved or a Contractor fails to deliver its request prior to the applicable deadline, then the Contractor shall be required to comply fully with the insurance requirements set forth in paragraph 36.0 above.

37.0 IT 508 Compliance

37.1 Unless specifically authorized in the Agreement, any electronic or information technology offered to the State of Arizona under this agreement shall comply with A.R.S. § 41-2531 and §2532 as may be amended, and Section 508 of the Rehabilitation Act of 1973, which requires that employees and members of the public shall have access to and use of information technology that is comparable to the access and use by employees and members of the public who are not individuals with disabilities.

38.0 Levels of Service

38.1 If the Contractor determines service recipient eligibility, the Contractor shall maintain and regulate services set forth in this contract to ensure continuity and availability of services to eligible persons during the term of this contract and during any transition to a subsequent Contractor.

38.2 The Department makes no guarantee to purchase specific quantities of goods or services, or to refer eligible persons as may be identified or specified herein. Further, it is understood and agreed that this contract is for the sole convenience of the Department and that the Department reserves the right to obtain like goods or services from other sources when such need is determined necessary by the Department.

38.3 Any administration within the Department may obtain services under this contract.

38.4 Contract services may be moved or expanded to other site locations within the geographic area awarded only by a written contract amendment.

38.5 When the method of compensation for the service is Fixed Price with Price Adjustment, the contract may be amended, by mutual agreement, to purchase additional services by increasing the contract service budget and/or budget summary.

39.0 Monitoring

39.1 The Department may monitor the Contractor and/or subcontractor and they shall cooperate in the monitoring of services delivered, facilities and records maintained and fiscal practices.

40.0 Non-Availability of Funds

40.1 In accordance with ARS § 35-154 as may be amended, every payment obligation of the State under the Agreement is conditioned upon the availability of funds appropriated or allocated for payment of such obligation. If funds are not allocated and available for the continuance of this Agreement, this Agreement may be terminated by the State at the end of the period for which funds are available. No liability shall accrue to the State in the event his provision is exercised, and the State shall not be obligated or liable for any future payments or for any damages as a result of termination under this paragraph.

41.0 Non-Discrimination

41.1 In accordance with ARS § 41-1461 and Executive Order 2009-09, the Contractor shall provide equal employment opportunities for all persons, regardless of race, color, religion, creed, religion, sex, age, national origin, disability or political affiliation. The Contractor shall comply with the Americans with Disabilities Act.

41.2 Unless exempt under Federal law the Contractor shall comply with Title VII of the Civil Rights Act of 1964 as amended. Contractor shall comply with the Age Discrimination in Employment Act. The Contractor shall comply with the Rehabilitation Act of 1973, as amended, which prohibits discrimination in the employment or advancement in employment of qualified persons because of physical or mental handicap. The Contractor shall comply with the requirements of the Fair Labor Standards Act of 1938, as amended.

41.3 If Contractor is an Indian Tribal Government, Contractor shall comply with the Indian Civil Rights Act of 1968. It shall be permissible for an Indian Tribal Contractor to engage in Indian preference in hiring.

41.4 The Contractor shall comply with Title VI of the Civil Rights Act of 1964, which prohibits the denial of benefits of or participation in contract services on the basis of race, color, or national origin. The Contractor

shall comply with the requirements of Section 504 of the Rehabilitation Act of 1973, as amended, which prohibits discrimination on the basis of handicap, in delivering contract services; and with Title II of the Americans with Disabilities Act, and the Arizona Disability Act, which prohibit discrimination on the basis of physical or mental disabilities in the provision of contract programs, services and activities.

41.5 The following shall be included in all publications, forms, flyers, etc. that are distributed to recipients of contract services:
"Under Titles VI and VII of the Civil Rights Act of 1964 (Title VI and VII) and the Americans with Disabilities Act of 1990 (ADA) Section 504 of the Rehabilitation Act of 1973 and the Age Discrimination Act of 1975, *insert Contractor name here*) prohibits discrimination in admissions, programs, services, activities or employment based on race, color, religion, sex, national origin, age, and disability. The (*insert Contractor name here*) must make a reasonable accommodation to allow a person with a disability to take part in a program, service, or activity. Auxiliary aids and services are available upon request to individuals with disabilities. For example, this means that if necessary, the (*insert Contractor name here*) must provide sign language interpreters for people who are deaf, a wheelchair accessible location, or enlarged print materials. It also means that the (*insert Contractor name here*) will take any other reasonable action that allows you to take part in and understand a program or activity, including making reasonable changes to an activity. If you believe that you will not be able to understand or take part in a program or activity because of your disability, please let us know of your disability needs in advance if at all possible. To request this document in alternative format or for further information about this policy please contact: (*insert Contractor contact person and phone number here*)" Para obtener este documento en otro formato u obtener información adicional sobre esta política, *(insert Contractor contact person and phone number here)*"

42.0 <u>No Parole Evidence</u>

42.1 Contract is intended by the parties as a final and complete expression of their agreement. No course of prior dealings between the parties and no usage of the trade shall supplement or explain any terms used in this document and no other understanding either oral or in writing shall be binding.

43.0 <u>No Waiver</u>.

43.1 Either party's failure to insist on strict performance of any term or condition of the Contract shall not be deemed a waiver of that term or condition even if the party accepting or acquiescing in the nonconforming performance knows of the nature of the performance and fails to object to it.

44.0 <u>Notices</u>

44.1 All notices to the Contractor regarding this agreement shall be sent to the address indicated in Attachment 4.

44.2 All notices to the ADES regarding this agreement shall be sent to the address indicated in section 7.0 General Reporting Requirements in the Scope of Work.

44.3 All notices shall reference the contract number.

44.4 The Contractor shall give written notice to the Department of changes to the following, and a written amendment to the contract shall not be necessary:

44.4.1 Change of telephone number;

44.4.2 Changes in the name and/or address of the person to whom notices are to be sent;

44.4.3 Changes in contract-related personnel positions of the Contractor which do not affect staffing ratios, staff qualifications or specific individuals required under this contract; or

44.5 In a fixed price with price adjustment contract, a written amendment shall not be necessary to shift costs among budget categories. The Contractor shall give written notice to the Department that includes justification for the change and receive written approval by the Department. Any such increase must be offset by an equal value decrease in any budget category or categories.

45.0 <u>Offshore Performance Of Work Prohibited</u>

45.1 Due to security and identity protection concerns, direct services under this contract shall be performed within the borders of the United States. Any services that are described in the specifications or scope of work that directly serve the State of Arizona or its clients and may involve access to secure or sensitive data or personal client data or development or modification of software for the State shall be performed within the borders of the United States. Unless specifically stated otherwise in the specifications, this definition does not apply to indirect or 'overhead' services, redundant back-up services or services that are incidental to the performance of the contract. This provision applies to work performed by subcontractors at all tiers

46.0 Order of Precedence

46.1 In the event of a conflict in the provisions of the Contract, as accepted by the State and as they may be amended, the following shall prevail in the order set forth below:

1. Terms and Conditions;
2. Scope of Work;
3. Attachments;
4. Exhibits.

47.0 Ownership of Intellectual Property

47.1 Any and all intellectual property, including but not limited to copyright, invention, trademark, tradename, service mark, and/or trade secrets created or conceived pursuant to or as a result of this contract and any related subcontract ("Intellectual Property"), shall be work made for hire and the State shall be considered the creator of such Intellectual Property. The agency, department, division, board or commission of the State of Arizona requesting the issuance of this contract shall own (for and on behalf of the State) the entire right, title and interest to the Intellectual Property throughout the world. Contractor shall notify the State, within thirty (30) days, of the creation of any Intellectual Property by it or its subcontractor(s). Contractor, on behalf of itself and any subcontractor (s), agrees to execute any and all document(s) necessary to assure ownership of the Intellectual Property vests in the State and shall take no affirmative actions that might have the effect of vesting all or part of the Intellectual Property in any entity other than the State. The Intellectual Property shall not be disclosed by contractor or its subcontractor(s) to any entity not the State without the express written authorization of the agency, department, division, board or commission of the State of Arizona requesting the issuance of this contract.

48.0 Pandemic Contractual Performance

48.1 The State shall require a written plan that illustrates how the Contractor shall perform up to contractual standards in the event of a pandemic. The State may require a copy of the plan at anytime prior or post award of a contract. At a minimum, the pandemic performance plan shall include:

48.1.1 Key succession and performance planning if there is a sudden significant decrease in Contractor's workforce.

48.1.2 Alternative methods to ensure there are services or products in the supply chain.

48.1.3 An up to date list of company contacts and organizational chart.

48.2 In the event of a pandemic, as declared by the Governor of Arizona, U.S. Government or the World Health Organization, which makes performance of any term under this contract impossible or impracticable, the State shall have the following rights:

48.2.1 After the official declaration of a pandemic, the State may temporally void the contract(s) in whole or specific sections if the contractor cannot perform to the standards agreed upon in the initial terms.

48.2.2 The State shall not incur any liability if a pandemic is declared and emergency procurements are authorized by the Director of the Arizona Department of Administration per A.R.S. § 41-2537 as may be amended of the Arizona Procurement Code.

48.2.3 Once the pandemic is officially declared over and/or the contractor can demonstrate the ability to perform, the State, at its sole discretion may reinstate the temporarily voided contract(s).

49.0 Payments

49.1 Reimbursement to the Contractor shall be in accordance with actual allowable costs incurred consistent with each service budget and/or budget summary not to exceed the service reimbursement ceiling. The Contractor shall furnish the Department with an accounting of actual costs incurred consistent with the categories set forth in the service budget(s). Budget categories, to include cost items in a category, may be deleted, added, or modified by a contract amendment as specified in section 44.0 Notices of these Terms and Conditions. Any change to the service reimbursement ceiling shall be reflected in a contract amendment.

49.2 The Contractor shall report to the Department in the manner prescribed in section 7.0 General Reporting Requirements in the Scope of Work. Upon receipt of applicable, accurate and complete reports, the Department will authorize payment or reimbursement in accordance with the type of payment indicated by this contract.

49.3 If the Contractor is in any manner in default in the performance of any obligation under this contract, or if audit exceptions are identified, the Department may, at its option and in addition to other available remedies, either adjust the amount of payment or withhold payment until satisfactory resolution of the default or exception.

49.4 Under no circumstances shall the Department make payment to the Contractor that exceeds the contract/service reimbursement ceilings indicated in Itemized Service Budget, as may be amended.

49.5 Under no circumstances shall the Department make payment to the Contractor for services performed after the term of the contract without timely extension or renewal of the contract.

49.6 The Contractor may offer a price reduction adjustment at any time during the term of the contract. Any price reduction shall be executed by a contract amendment.

49.7 Payments shall comply with the requirements of A.R.S. Titles 35 and 41, Net 30 days. Upon receipt and acceptance of goods or services, the Contractor shall submit a complete and accurate invoice for payment from the State within thirty (30) days.

49.8 The State of Arizona is subject to all applicable state and local transaction privilege taxes. Transaction privilege taxes apply to the sale and are the responsibility of the seller to remit. Failure to collect such taxes from the buyer does not relieve the seller from its obligation to remit taxes.

49.9 Contractor and all subcontractors shall pay all Federal, state and local taxes applicable to its operation and any persons employed by the Contractor. Contractor shall, and require all subcontractors to hold the State harmless from any responsibility for taxes, damages and interest, if applicable, contributions required under Federal, and/or state and local laws and regulations and any other costs including transaction privilege taxes, unemployment compensation insurance, Social Security and Worker's Compensation.

49.10 In order to receive payment the Contractor shall have a current I.R.S. W9 Form on file with the State of Arizona, unless not required by law.

50.0 Payment Recoupment

50.1 The Contractor shall reimburse the Department upon demand or the Department may deduct from future payments the following:

50.1.1 Any amounts received by the Contractor from the Department for contract services which have been inaccurately reported or are found to be unsubstantiated;

50.1.2 Any amounts paid by the Contractor to a subcontractor not authorized in writing by the Department;

50.1.3 Any amount or benefit paid directly or indirectly to an individual or organization not in accordance with the "Substantial Interest Disclosure" section of these Terms and Conditions;

50.1.4 Any amounts paid by the Department for services which duplicate services covered or reimbursed by other specific grants, contracts, or payments;

50.1.5 Any amounts expended for items or purposes determined unallowable by the Department when this contract provides for the reimbursement of costs, see the "Unallowable Costs" section of this contract;

50.1.6 Any amounts paid by the Department for which the Contractor's books, records, and other documents are not sufficient to clearly substantiate that those amounts were used by the Contractor to perform contract services;

50.1.7 Any amounts received by the Contractor from the Department which are identified as a financial audit exception;

50.1.8 Any amounts paid or reimbursed in excess of the contract or service reimbursement ceiling;

50.1.9 Any amounts paid to the Contractor which are subsequently determined to be defective pursuant to the "Certification of Cost or Pricing Data" section of these Terms and Conditions.

50.1.10 Any payments made for services rendered after the contract termination date.

51.0 Personnel

51.1 The Contractor's personnel shall satisfy all qualifications, carry out all duties, and work the hours as set forth in this contract.

52.0 Predecessor and Successor Contracts

52.1 The execution or termination of this contract shall not be considered a waiver by the Department of any rights it may have for damages suffered through a breach of this or a prior contract with the Contractor.

53.0 Professional Standards

53.1 The Contractor shall deliver contract services in a humane and respectful manner and in accordance with any and all applicable professional accreditation standards. Levels of staff qualifications, professionalism, and numbers of staff and individuals identified by name must be maintained as presented in the contract.

54.0 Property of the State

54.1 Any materials, including reports, computer programs and other deliverables, created under this Contract are the sole property of the State. The Contractor is not entitled to a patent or copyright on those materials

and may not transfer the patent or copyright to anyone else. The Contractor shall not use or release these materials without the prior written consent of the State.

55.0 Records

55.1 Under A.R.S. § 35-214 and § 35-215 as may be amended, the Contractor shall retain and shall contractually require each subcontractor to retain all data and other "records" relating to the acquisition and performance of the Contract for a period of five years after the completion of the Contract. All records shall be subject to inspection and audit by the State at reasonable times. Upon request, the Contractor shall produce a legible copy of any or all such records.

55.2 Contract service records will be maintained in accordance with this contract. Records shall, as applicable, meet the following standards:

55.2.1 Adequately identify the service provided and each service recipient's application for contract and subcontract activities;

55.2.2 Include personnel records which contain applications for employment, job titles and descriptions, hire and termination dates, a copy of the fingerprint clearance card, wage rates, and effective dates of personnel actions affecting any of these items;

55.2.3 Include time and attendance records for individual employees to support all salaries and wages paid;

55.2.4 Include records of the source of all receipts and the deposit of all funds received by the Contractor;

55.2.5 Include original copies of invoices, statements, sales tickets, billings for services, deposit slips, etc., and a cash disbursement journal and cancelled checks to reflect all disbursements applicable to the contract;

55.2.6 Include a complete general ledger with accounts for the collection of all costs and/or fees applicable to the contract; and,

55.2.7 Include copies of lease/rental agreements, mortgages and/or any other agreements that in any way may affect contract expenditures.

55.3 Any such records not maintained shall mandate an audit exception in the amount of the inadequately documented expenditures.

55.4 Contractor shall preserve and make available all records for a period of five (5) years from the date of final payment under this contract except as may be provided in section 57.0 of these Terms and Conditions or if subject to Health Insurance Portability & Accountability Act which is six (6) years from the date of final payment:

55.4.1 If this contract is completely or partially terminated, the records relating to the work terminated shall be preserved and made available for a period of five years from the date of any such termination.

55.4.2 Records which related to disputes, litigation or the settlement of claims arising out of the performance of this contract, or costs and expenses of this contract to which exception has been taken by the state, shall be retained by the Contractor until such disputes, litigations, claims or exceptions have been disposed of.

56.0 Relationship of Parties

56.1 The Contractor under this Contract is an independent Contractor. Neither party to this Contract shall be deemed to be the employee or agent of the other party to the Contract.

56.2 In the event that the Contractor or its personnel is sued or prosecuted for conduct arising from this contract, the Contractor or their personnel will not be represented by the Department of the Attorney General.

56.3 Taxes or Social Security payments will not be withheld from a State payment issued hereunder and the Contractor shall make arrangements to directly pay such expenses, if any.

57.0 Reporting Requirements

57.1 See section 7.0 General Reporting Requirements in the Scope of Work.

57.2 Contractor shall submit programmatic and financial reports to the Department no later than the 25th day following the end of each month or the end of each other applicable reporting period during the term of the contract, unless otherwise provided in this contract. Contractor shall submit final program and fiscal reports no later than the 60th day following termination of the contract. The final fiscal report for the contract term shall include all adjustments to prior financial reports submitted for the contract term. Failure to submit the final program and fiscal report within the above time period may result, at the option of the Department, in forfeiture of final payment.

57.3 All reports shall reference the contract number and be submitted to the person designated by the Department.

58.0 Responsibility for Payments Indemnification

58.1 The Contractor shall be responsible for issuing payment for services performed by the Contractor's employees, subcontractors, suppliers, or any other third party incurred in the furtherance of the performance or the arising out of the contract and will indemnify and save the Department harmless for all claims whatsoever out of the lawful demands of such parties. The Contractor shall, at the Department's request, furnish satisfactory evidence that all obligations of the nature hereinabove designated have been paid, discharged or waived.

59.0 Right of Offset

59.1 The Department shall be entitled to offset against any sums due the Contractor, any expenses or costs incurred by the Department, or damages assessed by the Department concerning the Contractor's non-conforming performance or failure to perform the Agreement, including expenses, costs and damages.

60.0 Scrutinized Business

60.1 In accordance with ARS § 35-391.06 and ARS § 35-393.06 as may be amended, the Contractor certifies that the Contractor does not have scrutinized business operations in Sudan or Iran.

61.0 Severability

61.1 The provisions of this Contract are severable. Any term or condition deemed illegal or invalid shall not affect any other term or condition of the Contract.

62.0 State's Contractual Remedies

62.1 Right to Assurance. If the State in good faith has reason to believe that the Contractor does not intend to, or is unable to perform or continue performing under this Contract, the Procurement Officer may demand in writing that the Contractor give a written assurance of intent to perform. Failure by the Contractor to provide written assurance within the number of Days specified in the demand may, at the State's option, be the basis for terminating the Contract under the Terms and Conditions or other rights and remedies available by law or provided by the contract.

62.2 Stop Work Order. The State may, at any time, by written order to the Contractor, require the Contractor to stop all or any part, of the work called for by this Contract for period(s) of days indicated by the State after the order is delivered to the Contractor. The order shall be specifically identified as a stop work order issued under this clause. Upon receipt of the order, the Contractor shall immediately comply with its terms and take all reasonable steps to minimize the incurrence of costs allocable to the work covered by the order during the period of work stoppage.

62.2.1 If a stop work order issued under this clause is canceled or the period of the order or any extension expires, the Contractor shall resume work. The Procurement Officer shall make an equitable adjustment in the delivery schedule or Contract price, or both, and the Contract shall be amended in writing accordingly.

62.3 Non-exclusive Remedies. The rights and the remedies of the State under this Contract are not exclusive.

62.4 Nonconforming Tender. Materials or services supplied under this Contract shall fully comply with the Contract. The delivery of materials or services or a portion of the materials or services that do not fully comply constitutes a breach of contract. On delivery of nonconforming materials or services, the State may terminate the Contract for default under applicable termination clauses in the Contract, exercise any of its rights and remedies under the Uniform Commercial Code, or pursue any other right or remedy available to it.

63.0 Subcontracts

63.1 The Contractor shall not enter into any Subcontract under this Contract for the performance of this contract without the advance written approval of the Procurement Officer. The Contractor shall clearly list any proposed subcontractors and the subcontractor's proposed responsibilities.

63.2 The Contractor shall provide copies of each contract with a subcontractor relating to the provision of contract services to the Department upon five (5) calendar days of the request.

64.0 Substantial Interest Disclosure

64.1 Contractor shall not make any payments, either directly or indirectly, to any person, partnership, corporation, trust, or any other organization which has a substantial interest in Contractor's organization or with which Contractor (or one of its directors, officers, owners, trust certificate holders or a relative thereof) has a substantial interest, unless Contractor has made a full written disclosure of the proposed payments, including amounts, to the Department.

64.2 Leases or rental agreements or purchase of real property which would be covered by Section 63.1 shall be in writing and accompanied by an independent commercial appraisal of fair market rental, lease, or purchase value, as appropriate.

64.3 For the purpose of this Section, "relative" shall have the same meaning as in A.R.S. §38-502 as may be amended.

65.0 Supporting Documents and Information

65.1 In addition to any documents, reports or information required by any other section of this contract, Contractor shall furnish the Department with any further documents and information deemed necessary by the Department. Upon receipt of a request for information from ADES, the Contractor shall provide complete and accurate information no later than fifteen (15) days after the receipt of the request.

66.0 Suspension or Debarment

66.1 The State may, by written notice to the Contractor, immediately terminate this Contract if the State determines that the Contractor has been debarred, suspended or otherwise lawfully prohibited from participating in any public procurement activity, including but not limited to, being disapproved as a subcontractor of any public procurement unit or other governmental body. If the contractor becomes suspended or debarred, the contractor shall immediately notify the State.

66.2 See Certification Regarding Debarment, Suspension and Voluntary Exclusion Lower Tier Covered Transactions.

67.0 Technical Assistance

67.1 The Department may, but shall not be obligated to, provide technical assistance to the Contractor in the administration of contract services, or relating to the terms and conditions, policies and procedures governing this contract. Notwithstanding the foregoing, the Contractor shall not be relieved of full responsibility and accountability for the provision of contract services in accordance with the terms and conditions set forth herein.

68.0 **Termination**

68.1 This agreement may be terminated by mutual agreement of the parties at any time during the term of this agreement.

68.2 Cancellation for Conflict of Interest. Pursuant to A.R.S. § 38-511 as may be amended, the State may cancel this Contract within three (3) years after Contract execution without penalty or further obligation if any person significantly involved in initiating, negotiating, securing, drafting or creating the Contract on behalf of the State is or becomes at any time while the Contract or an extension of the Contract is in effect an employee of or a consultant to any other party to this Contract with respect to the subject matter of the Contract. The cancellation shall be effective when the Contractor receives written notice of the cancellation unless the notice specifies a later time. If the Contractor is a political subdivision of the State, it may also cancel this Contract as provided in A.R.S. § 38-511 as may be amended.

68.3 Gratuities. The State may, by written notice, terminate this Contract, in whole or in part, if the State determines that employment or a Gratuity was offered or made by the Contractor or a representative of the Contractor to any officer or employee of the State for the purpose of influencing the outcome of the procurement or securing the Contract, an amendment to the Contract, or favorable treatment concerning the Contract, including the making of any determination or decision about contract performance. The State, in addition to any other rights or remedies, shall be entitled to recover exemplary damages in the amount of three times the value of the Gratuity offered by the Contractor.

68.4 Suspension or Debarment. The State may, by written notice to the Contractor, immediately terminate this Contract if the State determines that the Contractor has been debarred, suspended or otherwise lawfully prohibited from participating in any public procurement activity, including but not limited to, being disapproved as a subcontractor of any public procurement unit or other governmental body. Submittal of an offer or execution of a contract shall attest that the contractor is not currently suspended or debarred. If the contractor becomes suspended or debarred, the contractor shall immediately notify the State.

68.5 Termination for Convenience. The State reserves the right to terminate the Contract, in whole or in part at any time, when in the best interests of the State without penalty or recourse. Upon receipt of the written notice, the Contractor shall stop all work, as directed in the notice, notify all subcontractors of the effective date of the termination and minimize all further costs to the State. In the event of termination under this paragraph, all documents, data and reports prepared by the Contractor under the Contract shall become the property of and be delivered to the State upon demand. The Contractor shall be entitled to receive just and equitable compensation for work in progress, work completed and materials accepted before the

effective date of the termination. The cost principles and procedures provided in A.A.C. R2-7-701 shall apply.

68.6 Termination for Default.

68.6.1 In addition to the rights reserved in the contract, the State may terminate the Contract in whole or in part due to the failure of the Contractor to comply with any term or condition of the Contract, to acquire and maintain all required insurance policies, bonds, licenses and permits, or to make satisfactory progress in performing the Contract. The Procurement Officer shall provide written notice of the termination and the reasons for it to the Contractor.

68.6.2 Upon termination under this paragraph, all goods, materials, documents, data and reports prepared by the Contractor under the Contract shall become the property of and be delivered to the State on demand.

68.6.3 The State may, upon termination of this Contract, procure, on terms and in the manner that it deems appropriate, materials or services to replace those under this Contract. The Contractor shall be liable to the State for any excess costs incurred by the State in procuring materials or services in substitution for those due from the Contractor.

68.6.4 The Department may immediately terminate this contract if the Department determines that the health or welfare or safety of service recipients is endangered.

68.7 Continuation of Performance Through Termination. The Contractor shall continue to perform, in accordance with the requirements of the Contract, up to the date of termination, as directed in the termination notice.

68.8 Termination for Any Reason. In the event the contract is terminated, with or without cause, or expires, the Contractor, whenever determined appropriate by the Department, shall assist the Department in the transition of services or eligible persons to other Contractors. Such assistance and coordination shall include, but not be limited to, the forwarding of program and other records as may be necessary to assure the smoothest possible transition and continuity of services. The cost of reproducing and forwarding such records and other materials shall be borne by the Contractor. The Contractor must make provisions for continuing all management/administrative services until the transition of services or eligible persons is complete and all other requirements of this contract are satisfied.

68.9 In the event of termination or suspension of the contract by the Department, such termination or suspension shall not affect the obligation of the Contractor to indemnify the Department and the State for any claim by any other party against the State or Department arising from the Contractor's performance of this contract and for which the Contractor would otherwise be liable under this contract. To the extent such indemnification is excluded by A.R.S. §41-621 et seq.as may be amended or an obligation is unauthorized under A.R.S. §35-154 as may be amended, the provisions of this paragraph shall not apply.

68.10 In the event of early termination for any reason, any funds advanced to the Contractor shall be returned to the Department within ten (10) days after the date of termination or upon receipt of notice of termination of the contract, whichever is earlier.

69.0 Third- Party Antitrust Violations

69.1 The Contractor assigns to the Department any claim for overcharges resulting from antitrust violations concerning materials or services supplied by third parties to the Contractor, toward fulfillment of this Agreement.

70.0. Transfer of Knowledge

70.1 The Contractor shall, whenever feasible, share strategies and techniques with Department staff to transfer the skills and knowledge acquired in the delivery of the contracted service.

71.0 Transition of Activities

71.1 In the event that a contract is awarded to a new contractor for services similar to those being performed by Contractor under this contract, there shall be a transition of services period. During this period, the contractor under this contract shall work closely with the new contractor's personnel and/or Department staff to ensure a smooth and complete transfer of duties and responsibilities. The Department's authorized representative will coordinate all transition activities. A transition plan will be developed in conjunction with the existing contractor to assist the new contractor and/or Department staff to implement the transfer of duties. The Department reserves the right to determine which projects/service delivery nearing completion will remain with the current Contractor of record.

72.0 Unallowable Costs

72.1 The cost principles set forth in the Code of Federal Regulations, 48 CFR, Chapter 1, Subchapter e, Part 31, (October 1, 1991), including later amendments and editions, on file with the Arizona Secretary of State and

incorporated by this reference, shall be used to determine the allow ability of incurred costs for the purpose of reimbursing costs under contract provisions that provide for the reimbursement of costs. Those costs which are specifically defined as unallowable therein will not be submitted for reimbursement by the Contractor and may not be reimbursed with Department funds.

72.2 In addition, the Contractor shall comply with the following publications (including subsequent revisions), as applicable:

72.2.1 OMB Circular A-87 for State, local and Indian Tribal Governments.

72.2.2 OMB Circular A-122 for private non-profit organizations other than institutions of higher education, hospitals or others specified in A-122.

72.2.3 OMB Circular A-21 for educational institutions.

72.2.4 OMB Circular A-133 for audits of institutions of higher education and other non-profit institutions.

73.0 Visitation, Inspection and Copying

73.1 Contractor's and/or subcontractor's facilities, services and individuals served, books and records pertaining to the contract shall be available for visitation, inspection and copying by the Department and any other appropriate agent of the State or Federal Government. At the discretion of the Department, visitation, inspection and copying may be at any time during regular business hours, announced or unannounced. If the Department deems it to be an emergency situation, it may at any time visit and inspect the Contractor's or subcontractor's facilities, services and individuals served, as well as inspect and copy their contract-related books and records.

74.0 Warranty of Services

74.1 The Contractor warrants that all services provided under this contract shall conform to the requirements stated herein and any amendments hereto. The Department's acceptance of services provided by the Contractor shall not relieve the Contractor from its obligations under this warranty. In addition to its other remedies, the Department Procurement Officer may, at the Contractor's expense, require prompt correction of any services failing to meet the Contractor's warranty herein. Services corrected by the Contractor shall be subject to all of the provisions of this contract in the manner and to the same extent as the services originally furnished.

75.0 Contract Documents

75.1 The following constitute an integral part of the contract:

75.1.1 Terms and Conditions

75.1.2 Scope of Work

75.1.3 Administrative Methodology

75.1.4 Service Methodologies

75.1.5 Attachments

75.1.6 Exhibits

Scope of Work
Community Action Program Services

1.0 **DES Vision and Mission Statement**

1.1 DES Vision - Every child, adult, and family in the state of Arizona will be safe and economically secure.

1.2 DES Mission - The Arizona Department of Economic Security promotes the safety, well-being, and self sufficiency of children, adults, and families

2.0 **Community Action Program Services** - The broad-ranging goals of these programs and services are intended to pursue the reduction of poverty, the revitalization of low-income communities, and the empowerment of low-income families and individuals in rural and urban areas to become fully self-sufficient.

Allowable activities are designed to assist low-income families and individuals to remove obstacles and solve problems that block the achievement of self-sufficiency, to secure and retain meaningful employment, attain adequate education, make better use of available income, obtain and maintain adequate housing, obtain emergency assistance, achieve greater participation from low-income communities, establish partnerships and strengthen relationships with community organizations, establish youth development programs, create linkages to fill gaps in services, and support innovative community and neighborhood based initiatives.

Various objectives may include providing case management services to individuals and families in securing services from other agencies, or moving a family from crisis situations onto various stages of self-sufficiency.

2.1 **Definitions** – See Exhibit A, as may be amended.

2.2 **Community Services** - (Provided in every county in Arizona) The primary objectives of this service are to strengthen community capabilities for planning and coordinating the use of a broad range of resources related to the elimination of poverty; the organization of a range of services so that these services may have a measurable and potentially major impact on the causes of poverty and help families and individuals become self-sufficient; the greater use of innovative and effective community-base approaches to attacking the causes of poverty and of community breakdown; the maximum participation of the poor to empower them to respond to the unique problems and needs within their communities; and the broadening of the resource base of programs directed to the elimination of poverty.

2.3 **Case Management** - (Provided in every county in Arizona) The service provides assistance to low-income families and individuals by providing case management services that are intended to assist the household in resolving crisis situations and move closer to self-sufficiency. Components of this service include Short Term Crisis Services, Utility Assistance Services, and any other program or service the Contractor deems necessary and appropriate, according to local community needs and priorities.

2.4 **General Transportation** - (Provided in Coconino, Navajo and Yavapai Counties only) The service provides or assists in obtaining various types of transportation for specific needs.

This service may include various types of transportation for employment, medical, training, or other supportive services with the exception of ambulance services. It may be provided by Contractor-operated vehicles or through vouchers for public transit.

3.0 **Authority** - Pursuant to A.R.S. Section §41-1954 (A)(6) and (8), the Arizona Department of Economic Security has the authority to enter into contracts and to make funding available to provide an array of services for the reduction of poverty, the revitalization of low-income communities and the empowerment of low-income families to become fully self-sufficient.

4.0 **Funding** – Fund sources that support the services include the Community Services Block Grant (CSBG), Temporary Assistance to Needy Families (TANF), Social Services Block Grant (SSBG), Low Income Home Energy Assistance Program (LIHEAP), Emergency Shelter Grant (ESG), and Neighbors Helping Neighbors (NHN). The use of the funding may be directed by statute or prescribed by federal requirements. Funding information is summarized below.

Scope of Work
Community Action Program Services

FUND SOURCE	ALLOWABLE ACTIVITIES	ADDITIONAL INFORMATION
Community Services Block Grant (CSBG) – Federal	Activities that are designed to assist low-income families and individuals to remove obstacles and solve problems that block the achievement of self-sufficiency, to secure and retain meaningful employment, attain adequate education, make better use of available income, obtain and maintain adequate housing, obtain emergency assistance, achieve greater participation from low-income communities, establish partnerships and strengthen relationships with community organizations, establish youth development programs, create linkages to fill gaps in services, and support innovative community and neighborhood based initiatives.	Funds are distributed to designated Community Action Agencies (CAAs) according to a funding formula that consists of the following elements: (1) Number of persons in poverty in the geographic area served (2) Number of persons unemployed in the geographic area served (3) Five percent (5%) of the overall funds is distributed only to rural counties. *Any Contractor whose allocation does not reach a minimum of $150,000 will receive an allocation of at least $150,000. **The Limited Purpose Contractor serving Migrant or Seasonal Farm Workers will receive two percent (2%) of the overall available CSBG funds.
Temporary Assistance to Needy Families (TANF) – Federal	Case management services, emergency shelter, move-in assistance, eviction prevention, and utility assistance	Funds are distributed to designated CAAs according to a funding formula that consists of the following elements: (1) Number of persons in poverty in the geographic area served (2) Five percent of the overall funds is distributed only to rural counties. *Any Contractor whose allocation does not reach a minimum of $150,000 will receive an allocation of at least $150,000. **The Limited Purpose Contractor serving Migrant or Seasonal Farm Workers will receive two percent (2%) of the overall available TANF funds.
Social Services Block Grant – Locally Planned (SSBG-LP) Federal	Contractor operations, case management, general transportation, and supportive services, for individuals and families.	Funding amounts are determined through the local planning process of Councils of Governments (COG's) - for General Transportation in the counties of Coconino, Yavapai, and Navajo counties.
Emergency Shelter Grant (ESG) Federal	Services to prevent evictions and homelessness.	Funds are distributed only to rural designated CAAs according to a funding formula that consists of the following elements: (1) Number of persons in poverty in the geographic area served (2) Number of persons unemployed in the geographic area served.

FUND SOURCE	ALLOWABLE ACTIVITIES	ADDITIONAL INFORMATION
Low Income Home Energy Assistance Program (LIHEAP) Federal	Utility Assistance	Funds are distributed to designated CAAs and CBOs according to a funding formula that consists of the following elements: (1) Number of persons in poverty in the geographic area served (2) Number of persons unemployed in the geographic area served (3) Five Percent of the overall funds are distributed only to rural counties.
Neighbors Helping Neighbors (NHN) Local	Utility Assistance	Funds are distributed to designated CAAs and CBOs according to a funding formula that consists of the following elements: (1) Number of persons in poverty in the geographic area served (2) Number of persons unemployed in the geographic area served (3) Five percent (5%) of the overall funds is distributed only to rural counties.

5.0 **Contract Term**
5.1 The contract term shall have an effective date of July 1, 2010 and shall end on June 30, 2015.

6.0 **Administrative Requirements – The Contractor shall:**
6.1 Comply with DES/DAAS Policy and Procedure Manuals as may be amended, and all applicable federal, state, and local laws, rules, and regulations as may be amended, including but not limited to the following:

6.1.1 COATES Human Services Reauthorization Act of 1998
6.1.2 Personal Responsibility and Work Opportunity Reconciliation Act of 1996
6.1.3 Stewart B. McKinney Homeless Assistance Act
6.1.4 ARS §46-241 Short Term Crisis Services
6.1.5 ARS §46-701 Utility Assistance
6.1.6 ARS §46-741 Neighbors Helping Neighbors
6.1.7 ARS §140.01 Identity, Citizenship (Prop 200)
6.1.8 Ensure that Publications contain the following statement:

"This project was funded by the Arizona Department of Economic Security, Division of Aging & Adult Services, Community Action Program. Points of view are those of the author and do not necessarily represent the official position or policies of the Department."

Requests for exception shall be directed to the DES/DAAS Contract Specialist.

6.2 Staffing and Security
6.2.1 Ensure that all staff members (and volunteers) shall have no conflict of interest in providing services.
6.2.2 Provide to all staff and volunteers timely and accurate information and appropriate training for the services they provide.
6.2.3 Ensure that client/recipient confidential information is maintained in a secure location.

6.3 Equipment
6.3.1 Communicate with DES/DAAS electronically through email to convey Microsoft-based text and spreadsheet documentation, and access/utilize up-to-date information from the DES/DAAS, U.S. Department of Health and Human Services (DHHS) Office of Community Services, and other web sites (unless the geographic area does not have Internet capability).

6.3.2 Utilize computer backup/recovery systems and procedures to ensure no loss of data required for DES/DAAS reports, and to ensure that there is no disruption or degradation of services provided.
6.3.3 Utilize a computer-based tracking system from which monthly, quarterly, and other reports may be generated.

6.4 Service Provision
6.4.1 Provide services directly, as allowed, or through subcontractors.
6.4.2 Collect and report required client data.
6.4.3 Maintain documentation that key staff has received appropriate training or hold appropriate certification/licensure in accordance with their job descriptions.
6.4.4 Maintain documentation that appropriate case management staff has received training on the requirements of Proposition 200. (This does not apply to Tribal Contractors).
6.4.5 Provide services that are appropriate to the language, culture and geographic location of the target group.
6.4.6 Maintain and utilize a policy and procedure manual that includes, at a minimum, detailed intake procedures, program description and eligibility requirements, client grievance procedures, non-discrimination policy, and confidentiality requirements.
6.4.7 Maintain client-focused facility locations which offer sufficient client waiting space or waiting rooms, adequate seating, and restrooms for program applicants at all permanent facility locations indicated on the Facility Location Chart (See Attachment A).

6.5 Networking
6.5.1 Develop partnerships and network with related programs to provide more immediate resolution to issues and expand resources.
6.5.2 Form local partnerships with community agencies.
6.5.3 Network with social service professionals within the community to expand their means to receive and disseminate information for each service.
6.5.4 Collaborate to hold and participate in education, training, and information seminars, workshops, and conferences.
6.5.5 Participate in conference calls and attend meetings initiated by DES/DAAS to receive training or obtain information.

6.6 Subcontract Related Service Provisions
6.6.1 Document all costs associated with provision of contract services.
6.6.2 Provide administrative assistance, training and technical assistance to subcontractors in support of administrative functions as needed or requested by subcontractors.
6.6.3 Ensure that subcontractors are in compliance with applicable administrative directives and forms.
6.6.4 Ensure that subcontractors comply with Administrative Requirements as well as requirements specified in service scopes of work.
6.6.5 Provide technical assistance to subcontractors through procedural interpretation or by additional research upon request.
6.6.6 Develop and present initial and refresher training to subcontractor staff as deemed necessary by the Contractor subcontractor, or DES/DAAS.
6.6.7 Implement a coordinated service delivery system that establishes standards for service delivery and operations.
6.6.8 Hold periodic meetings with subcontractors to communicate new developments, discuss problems, share ideas for improvements, or address other identified topic areas.
6.6.9 Utilize client grievance procedures; which respond timely and effectively to customer complaints.
6.6.10 Develop linkages between the coordinated service delivery system and other community resources.
6.6.11 Identify service gaps among client populations, and develop and implement services or resources to meet identified needs.
6.6.12 Address client barriers to service.
6.6.13 Train appropriate personnel in the use and preparation of the DES EN-005 Application for Services form(s) as may be amended (See Exhibit B).

6.7 Monitoring and Evaluation
6.7.1 Utilize instruments for monitoring/evaluating subcontractors.

6.7.2 Conduct at a minimum, on-site contract compliance monitoring of subcontractors at least every two years, to include but not limited to facilities, administrative and financial operations, and programmatic service delivery.
6.7.3 Establish and implement a process for service/performance improvement.
6.7.4 Participate in DES/DAAS evaluation studies, when required.

7.0 **General Reporting Requirements – The Contractor shall:**
7.1 Submit the following items and all notices to:

Arizona Department of Economic Security
DAAS Contracts Management Unit
P. O. Box 6123-Site Code 086Z
Phoenix, AZ 85005-6123

7.1.1 A complete and accurate monthly Contractor's Invoice and Statement of Expenditures. (Note: Mileage will be reimbursed at no greater than the current federal mileage reimbursement rate. Exceptions may be requested in writing to, and considered/approved by, the Community Action Program Manager.)
7.1.2 Updated Cost Allocation Plan by October 1, 2010 if not provided prior to contract start date.
7.1.3 A correctly completed "Contractor's Equipment List", Form FES-1000AFORMA as may be amended, for all proposed equipment purchases costing $1000 or more to be purchased in whole or in part with DES/DAAS funds. (See Exhibit C)
7.1.4 Contractor's insurance certifications identified in the DES Special Terms and Conditions, Insurance Requirements section.
7.1.5 Subcontractor's insurance certifications identified in the DES Special Terms and Conditions, Insurance Requirements section.
7.1.6 By June 30th annually, a 12-month monitoring plan that includes at a minimum: which direct service subcontractors are to be monitored during the 12-month period beginning July 1st (of the same year), and for each: the type (desk or on-site) of monitoring, scope (administrative, fiscal, and/or programmatic) of monitoring, the specific service(s) to be monitored, and the target monitoring start and completion dates.
7.1.7 Programmatic reports as specified under each service (i.e., Community Services, Case Management, and General Transportation).

8.0 **Items Provided by the Department – The Department shall provide:**
8.1 Funding allocation information, as needed.

8.2 A Contractor's Invoice and Statement of Expenditures form.

9.0 Community Services

9.1 Service Description

9.1.1 Services that provide a range of activities that have a measurable and major impact on the causes of poverty.

9.2 Service Information

9.2.1 The purposes of the CSBG are to provide assistance to local communities through a network of CAAs that pursue six national goals outlined in federal law:

1. Low-income people become more self-sufficient
2. The conditions in which low-income people live are improved
3. Low-income people own a stake in their community
4. Partnerships among supporters and providers of services to low-income people are achieved
5. Agencies increase their capacity to achieve results
6. Low-income people, especially vulnerable populations, achieve their potential by strengthening family and other supportive environments

9.2.2 These goals will be accomplished through activities that:

1. Strengthen community capabilities for planning and coordinating the use of a broad range of resources related to the elimination of poverty, in a manner responsive to local needs and conditions;
2. Organize a range of services so that these services may have a measurable and potentially major impact on the causes of poverty and help families and individuals become self-sufficient;
3. Coordinate the greater use of innovative and effective community-base approaches to attacking the causes of poverty and of community breakdown;
4. Ensure the maximum participation of the poor to empower them to respond to the unique problems and needs within their communities;
5. Broaden the resource base of programs directed to the elimination of poverty.

9.3 Board Requirements – The Contractor shall:

9.3.1 Private, non-profit CAAs:

1. Select a Tripartite Governing Board that administers the services.
2. Ensure that the Tripartite Governing Board is comprised as follows:
   1. 1/3 are elected public officials, holding public office on the date of selection.
   2. 1/3 members are persons chosen in accordance with democratic selection procedures adequate to ensure that these members are representative of low-income individuals and families in the neighborhood served and each representative of low-income individuals and families selected to represent a specific neighborhood within a community, resides in the neighborhood represented by the member.
   3. The remaining members are officials or members of business, industry, labor, religious, law enforcement, education, or other major groups and interests in the community served.
3. Establish and follow written procedures identified in CSBG legislation to ensure the Tripartite Governing Board membership that conforms with Tripartite Board requirements, including a description of the democratic selection process used in the appointment of members.
4. Establish and follow written procedures including board by-laws, to ensure the Tripartite Governing Board fully participates in the development, planning, implementation, and evaluation of the program and services to serve low-income communities, including but not limited to:
   1. Active participation in the development and on-going implementation and evaluation of the Contractor Community Action Plan.
   2. Active participation in ensuring the completion of a Community Needs Assessment for the area served, and in reviewing the results of the Assessment to ensure responsiveness to any identified gaps in services.
   3. Active participation in the identification and evaluation of ROMA Performance Outcomes used in measuring the Contractor's effectiveness in achieving the six national goals.

5. Establish and follow written procedures that describe how a low-income individual, community organization, religious organization, a representative of low-income individuals that considers its organization and low-income individuals to be inadequately represented on the board, petition for adequate representation on the Board.
6. Conduct a minimum of 4 quarterly Tripartite Governing Board meetings per year that conform to Arizona open meeting laws.
7. Maintain records of Tripartite Governing Board membership, election and selection process, and detailed meeting minutes.
8. Ensure Tripartite Governing Board members receive appropriate training, including, but not limited to board member governance and advisory responsibilities, the purposes of the CSBG and other programs administered by the Contractor, and the requirement of the Board to participate in the ROMA System.

9.3.2 Public CAAs Advisory Board:

1. Select members to serve on a Board in which 1/3 of the board members are persons chosen in accordance with democratic selection procedures adequate to assure that these members are representative of low-income individuals and families.

9.4 **Community Action Plan Requirements – The Contractor shall:**

9.4.1 Develop, and implement when approved by DES/DAAS, a Community Action Plan that includes:

1. A description of a needs assessment for the community served, that may be coordinated with community-needs assessments conducted for other programs.
2. Contractors objectives that are aligned with the six national goals.
3. A description of the Contractor that includes its primary functions, responsibilities, organizational structure, and its association as part of a larger entity if appropriate.
4. A description of the service delivery system for services provided or coordinated with CSBG funds.
5. A narrative that demonstrates how the results of the Community Needs Assessment were used and incorporated into the Community Action Plan.
6. A description of how linkages will be developed to fills gaps in services through the provision of information, referrals, case management, and follow-up consultations.
7. A description of how CSBG funds will be coordinated with other public or private resources.
8. A description of how the Contractor will use CSBG funds to support innovative community and neighborhood based initiatives.
9. A description of how the Contractor will provide, on an emergency basis, for the provisions of such supplies and services, nutritious foods, and related services, as may be necessary to counteract conditions of starvation and malnutrition among low-income individuals.
10. A description of how the Contractor will, to the maximum extent possible, coordinate programs and form partnerships with other agencies serving low-income residents, including religious organizations, charitable groups, and community- based organizations.
11. A description of the ROMA performance outcomes and any related indicators that will be used to measure the Contractor's performance in achieving the six CSBG national goals.

9.5 **Results Oriented Management & Accountability (ROMA) Requirements – The Contractor shall:**

9.5.1 Participate in the Results Oriented Management and Accountability System for measuring performance and results of programs and services.

9.6 **Program Reporting Requirements – The Contractor shall:**

9.6.1 Submit the following items as may be amended, by the dates indicated, as may be amended, by the DES Community Action Program Manager through written notification to the Contractor:

1. Annual Community Action Plan with a description of the Needs Assessment conducted for the community **served**, by June 30th of each calendar year (Contractor must utilize format specified by DES/DAAS) (See Exhibit D).
2. Quarterly ROMA Outcomes Report (See Exhibit E) by October 25th, January 25th, April 25th of each calendar year. The Contractor shall submit a Fourth Quarter Report, but shall include Fourth Quarter data with the Annual CSBG IS Report (See Exhibit F). (Contractor must utilize format specified by DES.

3. CSBG Information System (IS) Report by October 1st of each calendar year (See Exhibit F).
4. Schedule of planned Board meetings for the next 12 months, by June 30th of each calendar year.
5. Monthly Community Services Block Grant (CSBG) Contract Payment Verification Form(All CAAs), as appropriate (See Exhibit G).
6. Copy of complete and detailed minutes from Tripartite/Advisory Board meetings within 30 days of the meeting date.
7. Current Organizational Chart by June 30th each calendar year, beginning 2011.
8. Current Agency Operations Spreadsheet by June 30th of each calendar year, beginning 2011.

9.7 Items Provided by the Department – The Department shall provide:

9.7.1 Formats for Annual Community Action Plan, Quarterly ROMA Outcomes Reports, and CSBG Final Reports.

9.7.2 Training on Community Action Plan preparation, Quarterly ROMA Outcomes Report preparation, and CSBG Final Reports.

10.0 Case Management

10.1 Service Description

10.1.1 A service or process that establishes a relationship with an individual or family in order to enhance their functioning and/or integration into the community. Appropriate services and/or benefits are identified, planned, obtained, provided, recorded, monitored, modified when necessary and/or terminated. This may include: assessment to determine their needs and eligibility when applying for/receiving services, assistance in finding necessary resources in addition to covered services to meet basic needs, assistance in obtaining entitlements, communication and coordination of care as well as follow-up of crisis contact or missed appointments.

10.1.2 This service specifically provides assistance to low-income families and individuals by providing case management services that are intended to assist the household in resolving crisis situations and move closer to self-sufficiency. Components of this service include Short Term Crisis Services, Utility Assistance Services, and any other program or service the Contractor deems necessary and appropriate, according to local community needs and priorities.

10.2 Service Information

10.2.1 The primary goal of this service is to assist low-income individuals and families in resolving crisis situations, and moving the household closer to self-sufficiency.

10.2.2 <u>All CAAs shall provide the following</u>:

1. Case Management
2. Short Term Crisis Services (STCS) provide temporary assistance to persons at or below 125 percent (125%) of poverty, or 150 percent (150%) if elderly or disabled, who have an emergent need that cannot be met immediately with their own income or other resources.

The STCS program is funded with TANF and is available to low-income families with children. Benefits available through the STCS program include the following:

1. temporary shelter at hotels/motels for homeless persons,
2. housing assistance for rent or mortgage assistance, move-in, and eviction prevention,
3. utility assistance for families with a current or anticipated interruption of heating and/or cooling services, and
4. special needs to secure or maintain employment.

10.2.3 <u>All CAAs and designated LIHEAP agencies shall provide the following</u>:

1. Utility Assistance Services that assist low income households lower basic home energy bills with specific emphasis on those households with the lowest income and highest energy burden and that respond to problems related to the termination of heating and/or cooling. Utility Assistance is funded with Low Income Home Energy Assistance Program (LIHEAP), and Neighbors Helping Neighbors (NHN) funds. Households must be at or below 200 percent (200%) of poverty to receive benefits. The Contractor shall offer Utility Assistance Services as a component program under the overall Case Management Service structure. Benefits include:
   1. Utility payments or deposits for heating and cooling
   2. Temporary emergency shelter (if needed due to energy related crisis)
   3. Payment of water bills related to cooling (May 1 through October 1)
   4. Rental assistance where utility payment is included in the rent

10.2.4 Tribal entities shall provide utility assistance funded with Low Income Home Energy Assistance Program (LIHEAP). Benefits include:

1. Utility payments or deposits for heating and cooling
2. Payment of water bills related to cooling (May 1 through October 1)
3. Rental assistance where utility payment is included in the rent

10.3 **Case Management Requirements (CAAs and designated LIHEAP agencies) – The Contractor shall:**

10.3.1 Develop and implement client oriented intake procedures which are responsive to households in crisis situations.

10.3.2 Develop and implement intake procedures responsive to applicants who are physically infirm and must apply for benefits without leaving their homes.

10.3.3 Develop in collaboration with the client, a case management plan that includes the following:

1. An assessment of the client's resources and needs.
2. Specific objectives that relate to the goal of alleviating any immediate crisis situation.
3. Eligibility for supportive services including but not limited to STCS and Utility Assistance, through direct provision or referral.

10.3.4 Provide assessment of the household's needs in order to establish a case plan if necessary, and arrange for the provision of services designed to:

1. Resolve any immediate crisis in a timely manner.
2. Assist the household in obtaining other benefits to which they may be eligible including but not limited to Home Weatherization, Appliance Repair or Replacement, Child Care, Earned Income Tax Credit, Supplemental Nutrition Assistance Program (SNAP), Social Security Benefits, and Utility Discount Programs.
3. Arrange for training or counseling intended to remove obstacles and solve problems that block the achievement of self sufficiency, including but not limited to financial literacy classes, budget counseling, energy conservation education, efforts intended to secure and maintain meaningful employment, attain an adequate education, obtain and maintain adequate housing and a suitable living environment, and to obtain emergency assistance to meet the immediate and urgent needs of the family or individual.

10.3.5 Complete a closing summary that includes at a minimum, the services provided, the number and type of referrals made to alleviate the crisis situation.

10.3.6 Participate in the development and implementation of a standardized "Client Self-sufficiency Matrix" to be used by all CAAs no later than December 31, 2010.

10.3.7 Not later than January 1, 2011, complete a self-sufficiency matrix for a minimum of 25 percent (25%) of all case managed households.

10.3.8 Utilize report formats specified by DES/DAAS. All Contract Payment Verification Reports shall be submitted on a monthly basis with the Contractor's monthly invoice. As appropriate, revised Case Management and Contract Payment Verification Reports shall be submitted with Supplemental Invoices.

10.4 **Short Term Crisis Services Requirements (CAAs only) – The Contractor shall:**

10.4.1 Follow all eligibility and procedural policies set forth in the DES/DAAS Short Term Crisis Services Policy Manual and related Policy Clarifications or Revisions and as amended from time to time.

10.4.2 Use the DES EN-005 Application for Services form(s) as may be amended, in determining program eligibility (See Exhibit B).

10.5 **Utility Assistance Service Requirements (CAAs and designated LIHEAP agencies only) – The Contractor shall:**

10.5.1 Follow all eligibility and procedural policies set forth in the DES/DAAS LIHEAP Policy Manual and related Policy Clarifications or Revisions and as amended from time to time.

10.5.2 Utilize the DES EN-005 Application for Services form(s) in determining program eligibility (See Exhibit B).

10.5.3 The Contractor must demonstrate and exercise the ability to pay all vendors on behalf of an eligible client.

10.5.4 Utilize an in-house system to make payments to utility companies.

10.6 **Results Oriented Management & Accountability (ROMA) Requirements (CAAs only) – The Contractor shall:**

10.6.1 Participate in the Results Oriented Management and Accountability system for measuring performance and results of programs and services.

10.6.2 Participate in a statewide "ROMA Advisory Committee" to identify standardized performance indicators for the statewide community action network.

10.7 **Program Reporting Requirements – The Contractor shall:**

10.7.1 Submit the following reports as may be amended, for the timeframes indicated, as may be amended by the DES Community Action Program Manager through written notification to the Contractor:

Scope of Work

Community Action Program Services

1. Monthly Case Management Report (All CAAs and designated LIHEAP agencies) (See Exhibit H1 for July, August, September 2010 and Exhibit H2 for October 2010 forward).
2. Tribal LIHEAP Monthly Report (Tribal entity only) (See Exhibit I).
3. Emergency Shelter Grant Annual Report (rural CAAs only) (See Exhibit J) by August 31st of each calendar year.
4. Social Services Block Grant Annual Report (All CAAs and designated LIHEAP agencies) (See Exhibit K) by August 31st of each calendar year.
5. ESG Prevention, Operations, and Essential Services Quarterly Report (rural CAAs only) (See Exhibit L)
6. Quarterly ROMA Outcomes Report (All CAAs) (See Exhibit E).
7. Monthly CSBG - American Recovery and Reinvestment Act (ARRA) Report, as appropriate (See Exhibit M).
8. Monthly CSBG-ARRA Jobs Created or Retained Report, as appropriate (See Exhibit N).
9. Monthly Short Term Crisis Services (STCS) Contract Payment Verification Form (All CAAs) (See Exhibit O)
10. Monthly Low Income Home Energy Assistance program Contract Payment Verification Form (All CAAs and designated LIHEAP Contractors) (See Exhibit P)
11. Monthly Community Services Block Grant Contract Payment Verification Form (All CAAs), as appropriate (See Exhibit G).
12. Monthly Emergency Shelter Grant/Prevention Contract Payment Verification Form (rural CAAs only) (See Exhibit Q)
13. Monthly Neighbors Helping Neighbors Contract Payment Verification Form (All CAAs), as appropriate (See Exhibit R).
14. Monthly CSBG-ARRA Contract Payment Verification Form (All CAAs), as appropriate (See Exhibit S).

10.8 **Items Provided by the Department – The Department shall provide:**

10.8.1 The following report formats as may be amended by the DES Community Action Program Manager through written notification to the Contractor: Case Management Monthly Report, ESG Prevention Report, Annual SSBG Report, and Quarterly ROMA Performance Outcomes Reports.

10.8.2 Training on completing the Case Management Monthly Report, ESG Prevention Report, Quarterly ROMA Outcomes Report preparation, Short Term Crisis Services Program, Low Income Home Energy Assistance Program.

10.8.3 Short Term Crisis Services Policy Manual.

10.8.4 Low Income Home Energy Assistance Program Policy Manual.

ADMINISTRATIVE METHODOLOGY:

2.0

2.2.1 Organization Structure: The Gila County Community Action/Housing Services is one department within the Gila County Division of Health and Community Services which provides services to a vast culturally diverse population with equally diverse needs. The entire division provides services to the population within our service area with the same level of commitment to excellence and equality. The Division is under the Gila County umbrella and the Community Action/Housing Services Program is under the Office of Community Services. Key staff of Community Action/Housing Services are: A Community Action/Housing Services Manager, a Case Manager serving Northern Gila County in the Payson area, a Case Manager serving Southern Gila County in the Globe area, a volunteer Case Manager in Hayden area, a CAP office Clerk in the Globe office, Housing Services assistant, Housing Rehabilitation Specialist, Davis-Bacon Specialist, Section Eight Housing Coordinator. Within the Office of Community Services there are Four departments: Community Services/Housing Services Department which provides housing rehabilitation, weatherization services and emergency housing repairs, section eight housing choice voucher program, utility assistance, telephone assistance, eviction prevention, homeless services, and supportive and Community Outreach Services. Gila Employment & Special Training which provides services to the disabled population, Re-Employment and Pre-LayOff Assistance Center which provides services to dislocated workers. We are also designated as a WIA one-stop center, also Des Job Service and Unemployment are located in our building. In the Office of Community Services there are currently 42 staff total.

2.2.2 Confidential Information: All client information is secured in locked file cabinets which are located in a Case Managers office, which remains locked during off office hours. Case files that have been closed are secured in locked file cabinets in a file cabinet room which is also locked during off office hours. Data entered into the T.H.O. database requires a password for access, which is specific only to the Case Manager who has entered it and the Program Manager. All department staff receives HIPPA training and are well aware and sign a confidentiality agreement. Hard copy case files are retained for a five and ten year period then shredded and disposed of in the local landfill. Electronic case files are accessed only by staff that maintain their own passwords, and cannot be accessed by anyone who does not have clearance.

2.2.3 Technology Equipment/Capabilities: The Gila County IT Department has built a wide area network (WAN) to serve Gila County's infrastructural and telecommunication needs. The WAN spans between Globe, Payson and the Phoenix metro area connecting County offices and staff to each other and to the world. The network provides voice, video and data services including remote connectivity through VPN and Web portals. The IT Department maintains and supports all of these technologies and continues to upgrade services to stay on the leading edge of business technology. All network equipment is Cisco. All CAP data is stored on a County server which is backed up by IT staff at end of each working day. Monthly Revenue and Expenditure reports are generated on as needed basis. Financial spreadsheets and programmatic data can be opened as word documents and sent via e-mail. Some Agency reports can be generated on an as needed basis using the T.H.O database. Software utilized by the Community Action/Housing Services agency are: Office 2007, Acrobat Reader and Microsoft Office.

ADMINISTRATIVE METHODOLOGY

2.2.4 Competitive Bidding Procedure: Gila County Community Action/Housing Services does not subcontract.

2.2.5 N/A Gila County CAP does not subcontract.

2.2.6 Linguistically/Culturally Appropriateness:
The entire Division of Health and Community Services including the CAHS Department provides services to diverse and targeted populations with the same level of commitment to excellence and equality. Staff recognizes the uniqueness of each individual's needs and level of service(s) based on cultural diversity and their needs. Bilingual staff is available within CAHS staff to assist the non-English and monolingual population. A sign language interpreter and a Spanish language translator is available upon request within the division staff, should the need arise. All departments of our division are housed under one facility, and if the need for language translation is apparent, staff will locate appropriate staff to provide that service. All CAHS brochures are available in English and Spanish. The Community Action Program provides "family focused" services with consideration to cultural diversity and beliefs. The Community Action Program does not discriminate on any basis. CAHS staff has been providing services to Gila County residents since 1982 and are aware of cultural issues with various groups within the county. In addition, staff has received training from ACAA regarding multi-cultural awareness.

Gila County encompasses an area of 4,768 square miles, with a population of only 51,335. This small rural area does not have a shelter facility for the homeless, however the Community Action Program has been serving the homeless population for 20 plus years with the resources that are available in our service area which is Northern and Southern Gila County (except reservation areas). The assistance we have been able to provide is in the form of motel vouchers for short term shelter. The targeted population that we serve includes the chronically homeless, eg: those who are homeless due to mental illness, drugs/alcohol addiction, chronically unemployed, and victims of abuse. The chronically homeless population mentioned above includes individuals, and families. The number of clients we anticipate serving in the first year of the contract is 200. This estimate is based on the number of prior referrals from community agencies as well as the number of clients turned away in the last fiscal year, for lack of funds and funding cuts. The Community Action Program service area is Northern and Southern Gila County (except reservation lands). There are CAHS offices providing service in Payson, Winkelman, and Globe.

2.2.7 N/A Gila County CAHS does not subcontract.

GILA COUNTY COMMUNITY ACTION/HOUSING SERVICES

COMMUNITY SERVICES METHODOLOGY

3.0

3.1.1 The Gila County Community Action/Housing Services has maintained a Community Action Agency Advisory Board since 1982. The Board is comprised of Private, Non-Profit, and Low Income members. The Board By-Laws were re-written, approved and adopted by the Gila County Board of Supervisors on January 20, 2008. CAP facilitates four quarterly meetings per year which conforms to the open meeting law. The Advisory Board approves the CAHS Plan on a yearly basis.

3.1.2 To ensure participation of Low Income representatives on the Advisory Board, members of the Low Income sector are recruited primarily by Board discussion of prospective members, after which the person completes an application which is reviewed and a vote taken by the Board to accept or reject the application.

3.1.3 Programmatic and budgetary information is provided to Board members quarterly for their review and input. The Board participates in an annual Strategic Planning meeting where the CAP Plan is discussed. All changes or revisions of the plan are implemented at that time. The Board votes to approve the implementation of the plan. It is anticipated that in the next fiscal year that the Board will review the results of any needs assessments and help in strategic planning for the next fiscal year. The Board does not review outcomes of case management efforts or evaluate the effectiveness of the service however this activity will be proposed for the next fiscal year. The Board reviews and approves budgets and expenditures on a quarterly basis.

3.1.4 The Gila County Community Action Program Advisory Board consists of nine members representing the following sectors:

PRIVATE SECTOR	PRIVATE SECTOR	LOW INCOME
Annie Hinojos		
Margret Celix	Robert Closs	Barbara Leetham
Lyn Canning		Audrey Opitz
Ramona Ortiz		Norberto Waddell

3.1.5 CAP Advisory Board meetings are scheduled by the CAHS Program Manager to be facilitated on a quarterly basis. Board meetings scheduled for the first year of the contract are for the third Wednesday of every third month beginning August 18, 2010. Board meetings scheduled: Nov. 17, 2010, Feb. 16, 2011, and May 17, 2011, for the first contract year.

3.1.6 CSBG funds are the base for delivery of all Community Action/Housing Services. Our system for the delivery of or coordination of services is: first an intake form is completed by the client, date and time stamped for sequence of scheduling; forms are distributed to case managers for scheduling. Case managers determine eligibility, review household size, relationship and citizenship status. Then the determination of crisis and which program criteria will best assist the household. Discount programs and other referrals are made so that the household receives a full circle of assistance rather than the initial issue that brought them into the office for

assistance. In the event of an immediate crisis such as; utilities have been turned off or the late stages of legal eviction or homelessness, the client interview will take place immediately. The local utility companies coordinate and cooperate very well with CAHS staff. Often, with a phone call the utility company will accept a verbal commitment of payment by CAHS staff, and they will delay the disconnect or reinstate service immediately allowing the client time to provide documentation required for service and CAHS to schedule an appointment at the next available time slot. On occasion when the client is not ultimately eligible for service, CAHS staff have backup services available through local faith based organizations that perhaps will cover what we are unable to provide.

3.1.7 the most recent Needs Assessment was conducted in January 2009. The process used was to distribute the assessment to agencies within our Network group. Each group in turn had their clients fill out the assessment. Data was then collected and the results were compiled. The impact of this assessment has helped in prioritizing which needs need to be addressed first and ultimately incorporate them into our Community Action/Housing Services Plan. Needs that have been identified as priority are lack of jobs that create emergency needs, and lack of affordable, healthy & safe housing., Where CAHS does not have the resources to provide for clients, they are referred to our in house partners, local faith based organizations, local non profits and some school programs. Some needs that we were not able to provide service for are general special needs such as: auto repairs, auto insurance, and funds for driver's license or ID cards, education materials, tuition. Affordable, healthy & safe housing is a critical issue in Gila County. In addition to interdepartmental referrals the CAHS case manager will provide clients with a description of services available from CAHS as well as criteria for eligibility to receive services. In addition, information will be provided in the form of a program brochure, and a resource guide which outlines services available from other resources in the community. Information regarding how to access or will be accessed by the case manager for them will be provided to the client. CAHS has started a VITA Tax site in Payson and will be opening a new Vita Tax site in Globe, this will help keep clients with in their budget and we are also conducting financial literacy classes. A written referral will be provided to the client and an introductory phone call will be made by the case manager on behalf of the client.

CAHS case managers are well trained and have expertise in identifying community resources and they routinely provide referrals for clients to other resources within the community. Information will be provided in the form of brochures and the Community Resource Guide, better known as the Peoples Information Guide, from Arizona Community Action Association. The Resource Guide outlines services available from CAHS as well as other services and resources available in our community and state. Information regarding how to access these agencies will also be provided to the client. When it has been determined by the case manager that a client requires services from another agency, the case manager will make the referral and advise the client of the eligibility requirements of that agency which will assist the client in accessing those services and expedite the process. CAHS's has formal agreements with DES State of Arizona, Arizona Department of Commerce, Energy Office, Arizona Department of Housing, Arizona Community Action Association/ Home Energy Fuel Fund, City of Globe, Town of Star Valley, Pinal-Gila Area Agency on Aging, Housing&Urban Development Town of Winkleman, Arizona Public Service.

3.1.8 CAHS case managers are well trained and have expertise in identifying community resources and they routinely provide referrals for clients to other resources within the community. Information will be provided in the form of brochures and the Community Resource Guide, better known as the Peoples Information Guide, from Arizona Community Action Association. The Resource Guide outlines services available from CAHS as well as other services and resources available in our community and state. Information regarding how to access these agencies will also be provided to the client. When it has been determined by the case manager that a client requires services from another agency, the case manager will make the referral and advise the client of the eligibility requirements of that agency which will assist the client in accessing those services and expedite the process. CAHS's has formal agreements with DES State of Arizona, Arizona Department of Commerce, Energy Office, Arizona Department of Housing, Arizona Community Action Association/ Home Energy Fuel Fund, City of Globe, Town of Star Valley, Pinal-Gila Area Agency on Aging, Housing&Urban Development Town of Winkleman, Arizona Public Service.

3.1.9 CSBG funds will be coordinated with public resources such as Community Kids, and Payson Helping Payson. Other available public and private resources will also be utilized. Other funds leveraged with CSBG include DES, CDBG, SemStream, Southwest Gas, AZ Public Service, Gila County,HUD, Town of Payson, FEMA,HEAF,DOE, which are local and federal monies and provide both administrative dollars 15% and direct services 85%. Our agencies provide these services and are able to determine what the needs are of each client at the time of application and utilize the resources as applicable. CSBG funding also provides funding for staff salaries and monies for staff to attend and serve on local agency boards and committees.

3.1.10 Emergency services for conditions of malnutrition or starvation will be provided through the coordination of services which are within our division, eg. The Office of Health Services and our Local Food Bank. Local Food Banks are utilized quite often and referrals are given to clients and tracked by CAP staff. The WIC program through the Health Department which is a program within our division, which distributes food boxes, is also utilized. CAP staff makes referrals to the WIC program and facilitate deliveries to the Home bound as well.

3.1.11 The Office of Community Services has established strong interagency linkages and provides a large cluster of direct and community services. Services are primarily directed at improving the quality of life for low income persons in Gila County and in improving service delivery through interagency cooperation. The Office of Community Services is located in the Gila/Pinal Workforce Investment Area Comprehensive One-Stop Center. This One-Stop Center is located in the Globe area and contains all One Stop core services, in addition to all the Divisions services previously mentioned in this methodology. CAP's location at the comprehensive site will better enable staff to assist clients in achieving self-sufficiency. CAP staff will be trained in all other programs which will result in being able to provide clients with a variety of information and assistance. Partners located at the center include Job Service, Veteran's Admin., and Job Core, Gila Literacy, Title I and all other required partners as stated in the Workforce Investment Act. CAP also coordinates and partners with local faith based and civic organizations to better serve our low income residents. One of the key responsibilities of each partner is to make available at the Comprehensive One Stop Center appropriate core services that are applicable to the partner's program. Individuals will be able to access the following partner's core services at the One Stop:

a. Title I Adults, Youth, Dislocated Worker
b. Job Corps
c. Native American programs
d. Migrant/Seasonal farm Worker Prog.
e. Veterans Workforce Prog.
f. Program authorized under Wagner/Peyser Act
g. Adult education/literacy activities
h. Vocational Rehabilitation Prog.
i. Welfare to Work Prog.
j. Senior community Sacs. Emp.
k. Postsecondary Voc. Education
l. Trade Adjustment Asst./NAFTA
m. Community Service Block Grant
n. Housing and Urban Dvp.

The Gila County Division of Health and Community Services is a division of Gila County. CAHS is one department within that division. There are four departments within the division and staff of all departments provide direct services to clients in an office setting, in the community, and in the client's home. Our goal is to continually update our knowledge and skills to enable clients to achieve self sufficiency. The division has established strong interagency linkages and provides a large cluster of direct and community services. Services are directed at improving the quality of life for all our clients and in improving services delivery through interagency cooperation. Through continued communication and partnering with agencies within the Interagency network CAHS staff have formed and maintain long lasting partnerships with other agencies to further serve our clientele.

3.1.12 The CAHS T.H.O. data base tracks all ROMA performance requirements to achieve the six CSBG national goals. CAHS proposes the following measures under each performance goal.

Goals	Community Needs / Gaps in Service	Performance Measures
L ncome People Become More Self-Sufficient	The unemployment rate for Gila County is 18.2%, which is higher than the rate for the State of Arizona. Many of the jobs available are in the mining industry which is currently laying off hundreds of employees. These jobs historically offer high wages, but are union jobs and see many layoffs and/or strikes.	Unemployed & obtained a job Achieved living wage employment & benefits Obtained safe & affordable housing Participate in tax preparation programs Enrolled in discount programs
The Conditions in Which Low-Income People Live are Improved.	Due to the age of homes in Gila County and the fact that the population is older citizens many of the low-income homeowners reside in unsafe housing and cannot afford the cost of replacement housing. In addition, many homeowners are facing foreclosure because of questionable mortgages with high and/or variable rates.	Provide weatherization & home repair and home repair education Provide foreclosure mitigation services
Low Income People Own a Stake in Their Community	Many low-income individuals do not engage in community activities and, therefore, do not actively participate in the decision making that impacts their lives. In addition many low-income individuals are reluctant to consider the possibility of becoming homeowners.	Provide opportunities for community members to volunteer at Gila County CAP. Provide housing counseling workshops to improve credit and information about home ownership.
Partnerships Among Supporters and Providers of Service to Low-Income People are Achieved.	The issues of limited resources that are available for human services programs is most effectively addressed through community and agencies collaborations and partnerships.	Facilitate the Continuum of Care and the Interagency meetings and participate in other efforts to provide services to fill identified gaps.
Agencies Increase Their Capacity to Achieve Results	Agencies have a limited capacity due to budget cuts in Gila County so services are cut to the low-income population. Especially hard hit is personnel to work with clients.	By networking, bringing in more volunteers. Petition funding agencies to Find a way to cut back on the extreme amount of paperwork. Which would allow more time for clients and increase our capacity to achieve results for local clients in need
L -Income People, Especially Vulnerable ulations, Achieve their Potential by Strengthening Family and Other Supportive Systems.	In order for individuals and families to participate effectively in programs that increase, assistance must be provided to stabilize financial crises. When financial stability is achieved, the households can then begin to consider engaging in a case management plan to address identified issues.	Provide financial assistance to stabilize financial crises. Refer households to programs that focus on preparing children for school. Refer households to programs that increase their living and parenting skills.

GILA COUNTY COMMUNITY ACTION/HOUSING SERVICES PROGRAM

CASE MANAGEMENT METHODOLOGY

3.2

3.2.1 At intake, a case manager will complete an EN-005 on all clients seeking assistance. The EN-005 gathers demographic information. A Client assessment record will be completed on each client using the Arizona Self-Sufficiency Matrix. The data used to complete the EN-005 and the assessment record will assist the case manager and client in determining need. Based on initial assessment, follow-up visits will be scheduled with the client and documented on the client assessment record. For those unable to come into the office, a case manager will provide a home visit to complete the above.

#1. Regular business hours are Monday through Friday 8:00 am to 5:00 pm. Home visits are scheduled at the time that the case manager calls the client to set an appointment. These visits are at the convenience of the client CAHS case managers do not take applications over the phone or through the mail.

#2. If assistance is needed outside of regular business hours, arrangements will be made to provide that assistance on an as needed basis. Priority will be given to assist families with children, handicapped persons and the frail and elderly.

CAHS case managers make every effort to schedule appointments for clients when it is most convenient for the client. A preliminary intake form is completed at the time the client comes into our office. This intake form is routed to the appropriate case manager at which time the case manager will contact the client to arrange an appointment for the full intake process.

#3 CAHS staff schedule their individual lunch hours so that there is always a case manager in during that time. If a client comes into the office when staff are at trainings or off site meetings, the CAHS clerk will provide the preliminary intake form for them to be completed, and inform them when a case manager will likely call to schedule an appointment for them. Staff is always available to assist clients when a case manager is not available. CAHS staff who take care of the front desk (the receptionist or CAHS clerk) will assist clients in the absence of a case manager. Case managers always return calls as soon as they return to their office. All case managers have voice mail capabilities, and they call in to check the messages when they are away for trainings or off site meetings. Calls are generally returned no more than 24 hours after the client call. Clients can identify a time when the case manager can return their call.

Every person requesting services from CAHS is given an intake form to complete. The form is immediately date and time stamped. Clients are given a brochure that states what information is needed, referral numbers for other services and a statement of Clients rights and responsibilities. Client surveys are located in the lobbying with clear signage that lets clients appeal and give feedback on how CAHS is doing. The data gathered on the intake is then entered into the data base. Case Managers schedule the applicants on a first come first served basis. Clients can schedule an appointment by phone without actually coming into the office. When an appointment is made, the case manager requests all pertinent documentation for the intake, from the client, and the appointment is made depending on when the client can collect all the documentation needed for intake.

Usually an appointment can be made within a couple of days. There is no pre-determined days/times for scheduling appointments. appointments can be made at anytime during business hours. #4. The process utilized to immediately assist a person in a crisis situation is first to do an initial interview with the person to determine the crisis and assess the need. If supportive services can be provided with CAHS funds. then those supportive services will be immediately be provided. If other resources are necessary to assist the client. then a referral will be made. Every effort is made to immediately see a client in crisis at the time the crisis is identified. If a client comes in and a crisis is identified. the case manager will work the client in between appointments.

A crisis is defined as a separation of the family that resulted from domestic violence. loss of income. unforeseen circumstances that increased expenditures making it difficult to meet the following months budgeted expenditures. a condition which endangers the health or safety of the household or special needs necessary to secure or maintain employment. CAHS has a screening document that quantifies risk factors. CAHS does not keep open appointment on a daily basis for clients in crisis. rather they are assisted as stated above when the crisis is identified and the client can be worked in between scheduled appointments as soon as possible.

#5. CAHS proposes to provide case management to all low income families and individuals meeting the CAHS eligibility requirements. homeless. and the elderly. The case management services will be modeled after the Family Development Program. This program is designed to assist families in overcoming multiple barriers enabling them to become self sufficient. Staff of CAP has received extensive training regarding Family Development and the utilization and implementation of the ROMA self sufficiency matrix. When STCS funds have been depleted. case managers will utilize HPRP as well as other funding resources available within the Program to assist clients with utility and Rental assistance. #6 Written Referrals to Salvation Army and St. Vincent De Paul in addition to other local agencies or churches are also made when funds are depleted. Case management services are provided even if voucher funds are depleted.

#7. The CAHS staff is very well aware of the importance of the involvement of the entire family in creating a safe and nurturing home life for its members. The staff expects that all members of the family participate in the formulation of a Family Service Plan and in all aspects of the fulfillment of the plan as well as the goals and steps required to reach that goal. The case management process and the notice of eligibility. denial. rights and responsibilities of the client regarding their participation in the program will be fully explained at the time of intake.

3.2.2 Below is the case management model utilized by Gila County Community Services Program:

a) A Family Service Plan is developed with each client based on their Arizona Self Sufficiency Matrix levels. The client is fully engaged in the formulation of their plan. The plan identifies the clients: goals. start and targeted completion dates. tasks required to achieve the goals. who will complete the task and services to be provided and/or accessed. Strengths. past successes and other assets that could contribute to a solution will be discussed. Clients will be encouraged to become skilled in solving problems. using appropriate resources that the client. case manager and other agencies can obtain. A copy of the service plan will be contained in the client file along with case notes documenting activities of the client and their family. The client's case plan is monitored by completing a 30. 60. and 90 day follow up addressing the outcomes of referrals from the clients case plan.

3.2.2(4)For outside referrals client is provided with paperwork directing them to the additional assistance and then it is returned to CAHS.

b.) After developing of the case plan which is outlined above in a). the plan will be monitored using the information and documentation contained in the client file. Our current contracts with Arizona Department of Economic Security dictates that the type and quantity of services that clients receive. which is also entered into our T.H.O database. A client file for each client receiving case management services will be formulated. This file will contain the Self-Sufficiency Assessment and updates. a copy of the EN-005. the Family Service Plan/updates. case notes. and follow-up information in addition to any other pertinent documentation required from the various funding sources utilized to provide services to the client.

c) As an ongoing process of case management. the case manager will continue to assess and assist the client in obtaining services required to meet their needs and situation. Copies of all documents utilized to track the progress will be included in the client file. The client's progress will be tracked utilizing the Arizona Self-Sufficiency Matrix. Case closure will occur upon successful completion of goals outlined in the service plan. at the request of the client to discontinue services. or by agreement of the case manager. program manager or Divisional Program Manager. At the time of closure. reasons for the closure will be documented in the client file. Reasons for case closure may be: due to non-compliance by the client or because they have reached a level of self sufficiency that is satisfactory to the client and case manager.

d.)The CAHS case managers are well trained in community resources and routinely provide referrals for clients to other resources within the division and community. When the determination that a client requires services from another agency the case manager will make the referral and advise the client regarding that agency's services and eligibility requirements. This will assist the client in accessing those services and expediting the process of obtaining assistance.

e) A Pre and Post Assessment will be completed with each client who is receiving case management services utilizing the Arizona self-sufficiency matrix. The matrix shows the clients status in 12 areas of need, based on their status. the case manager will work with the client to set goals in the areas that the client feels they need the most assistance. As a client progresses toward their goal. the matrix is updated to indicate positive or negative movement toward the goal. The CAHS plan will be reviewed on a quarterly basis to evaluate the effectiveness of case management services and to determine whether we are meeting our targeted goals and following the mission and philosophies identified in the plan. The CAHS plan will assist in identifying areas where we are failing to meet goals and to provide direction for the staff to strive for improvement.

3.2.3 Case management services assist in achieving the six CSBG national goals by assisting low-income persons in all areas to help them attain their own personal level of self-sufficiency. These various levels are measured and tracked through the Arizona Self-Sufficiency Matrix. The Matrix is an intricate part of the T.H.O. Client Information System. This database meets all of ROMA tracking requirements and is able to track each client as they move up on the various levels of the matrix. CAHS case managers will interview all applicants during the initial intake for services. This process will include input from the client with the assistance of the case manager. When possible all adults in the household are asked to participate. The number one and number six National Family Goals and the corresponding indicators are discussed at that time. Any appropriate indicators within the goals that apply to that family will be discussed and potential future outcomes or objectives will be identified. This assessment is recorded in the service plan that identifies the direct services that are being provided through CAHS. It will also include outside referral information and resources for the client to contact to assist in implementing the plan. Case notes on clients who receive case management are printed out hardcopy and maintained in the client file.

NOTICE OF ELIGIBILITY, DENIAL,APPEAL FOR SOCIAL SERVICES

Gila County Communitiy Action
P O Box 1254
Globe, AZ 85502-1254
(928) 425-7631

Date: 6/11/2010

Dear:

☐ **Your application for social services has been approved. You will be receiving the following service:**

_____ $ -

_____ $ -

_____ $ -

☐ **Your application for social services has been denied. The reason(s) is/are:**

☐ Your income exceed Federal poverty levels.

☐ You have already received assistance and by regulation cannot be assisted again at this time.
You MAY be eligible to reapply on: _____

☐ You failed to provide requested verification needed to complete your application and to determine eligibility

_____

☐ Gila County CAP had no contract funds available at this time to assist you.

☐ You requested your application not to be completed.

☐ The program for which you applied required that you have a documentable crisis in the home.

☐ Other

YOU HAVE THE RIGHT TO APPEAL THIS DECISION

If you believe that your application should not be denied you may appeal this decision. If you wish to appeal you or your authorized representative must do so in writing within fifteen (15) days of the mailing or delivery of this notification. Please notify the CAP office if you wish to appeal this decision. You will be assisted in your request to appeal.

Case worker Name: Maria Brusoe

Caseworker Signature: _____ Date: 6/11/2010

3.2.4
The tools utilized to complete a needs assessment, case planning, monitoring, and closure of the case plan is primarily the T.H.O. data base information system which provides data that is utilized to determine the progress or lack of progress in reaching self sufficiency, Hard copies of the assessment of needs are contained in the client file in the form of case notes and the Matrix. Any data in the T.H.O. data base can also be printed out hard copy and maintained in the client file.

3.2.5
A client satisfaction survey form is disbursed and a request for the completion of the survey is provided at the time of initial contact with the client and again at the time of case closure. A survey box is located in the lobby of our facility and the client is asked to deposit the survey in that container. The Division Director or Deputy Director retrieves survey documents from the box on a monthly basis and at the end of the quarter the results from the survey are reviewed by the CAHS Manager and Administrative staff quarterly. The results are prioritized by the CAHS Manager, and discussed with staff to determine what if anything needs to be done to make CAP more effective in serving our community. These surveys are collected, and reviewed by supervisory staff on a quarterly basis, and the results are discussed with program manager in the effort to continue to improve and enhance service delivery to our clients. CAHS staff have plans to formulate a program specific survey to be utilized in the next fiscal year.

3.2.6 Funds utilized by case managers to provide utility assistance and the STCS program, on an on-going basis are made available to the case managers by an allotment process. This process is achieved by the Fiscal Manager. Carryover funds at the end of each month and the monthly allotment provided by the State is used to percentage out to the case managers, the funds available to provide direct client services for that current month. Expenditures are monitored on a weekly basis as vouchers are submitted and kept within an Excel spreadsheet. Fiscal Manager balances and reconciles on a monthly basis with the grant and the county. Case managers are given an allotment amount to expend each month at a CAHS staff meeting and work with all funding sources available to ensure they do not exceed the monthly budgeted amounts.

3.2.7 All clients are informed of the CAHS grievance policy and procedures at the time of the initial intake process. Upon receipt of a grievance the CAHS Manager will schedule a meeting with the client and case manager within 24 hours, if the complaint cannot be resolved in this meeting, another meeting will be facilitated within 5 working days, with the Division Director, Program Manager, case manager and client. If the grievance is not resolved at this meeting a written appeal and all accompanying documents will be forwarded to the Department of Economic Security within 7 working days of the last meeting. The written appeal shall be forwarded to Ariz. Dept. of Economic Security, Community Services Admin. P.O. Box 6123 Site Code 086Z, Phx. AZ 85005

3.2.8 As previously mentioned in this methodology, the client satisfaction surveys are reviewed and discussed with the appropriate case managers in the effort to ascertain what measures need to be discussed to improve and enhance our services to the clients. The Division Director or Deputy Director retrieve survey documents from the box on a monthly basis and at the end of the quarter the results from the surveys are reviewed by the CAHS Manager and Administrative staff quarterly. The results are prioritized by the CAHS Manager, and discussed with staff to determine what if anything needs to be done to make CAP more effective in serving our community.

GILA COUNTY DIVISION OF HEALTH COMMUNITY SERVICES
ALLOCATED FUNDS REPORT
SFY 2011

CONTRACTOR	E#	COUNTY	SVC	FUND SOURCE	COST TYPE	2011 AWARD	COMMENTS
GILA		GILA	CMT-A	LIHEAP	A	14,222.00	
GILA		GILA	CMT	LIHEAP	V	222,500.00	
GILA		GILA	CMT	LIHEAP A16	A	15,623.00	
GILA		GILA	CMT	NHN	V	865.00	Total:
GILA		GILA	CMT	SSBGLP	A	8,352.00	Vouchers 255077
GILA		GILA	CMT	TANF	S	150,000.00	130,707.00
GILA		GILA	CMT	TANF	V	0.00	19,293.00
GILA		GILA	CMT	QWEST	A	1,082.00	
GILA		GILA	CMT	ESG	P	6,659.00	
GILA		GILA	CMT	LIHCON	A	1,473.00	
GILA		GILA	CMT	LIHCON	V	25,055.00	
GILA		GILA	CMT	LLVG	V	0.00	
				sub-total		**445,831.00**	
GILA		GILA	CSV-B	CSBG	A	150,000.00	140,000
GILA		GILA	CSV	CSBG	V	0.00	10,000
				sub-total		**150,000.00**	
GILA		GILA	CSV-C	CSBG-ARRA	A	0.00	
GILA		GILA	CSV-C	CSBG-ARRA	V	0.00	
				Total		**595,831.00**	

ITEMIZED SERVICE BUDGET
FOR CONTRACT SERVICE: Case Management
PROVIDER NAME: Gila County Community Action Program
CONTRACT PERIOD: 7-01-10 TO 6-30-11
Attachment A

1 PERSONNEL

Number of Positions	FTE Level	Position Title	Salary for Contract Period	% Allocated to Service A+ D = Total	Total Service Cost	CPIP Cost
1	1	Divisional Fiscal Manager	$53,893	50%+0=50%	$ 26,946	$ 26,946
1	1	Divisional Accountant	$35,422	50%+0=50%	$ 17,711	$ 17,711
1	1	Program Manager	$47,632	25%+25=50%	$ 23,816	$ 11,908
1	1	Case Manager	$30,534	0%+50%=50%	$ 15,267	$ 15,267
1	1	Case Manager	$32,094	0%+50%=50%	$ 16,047	$ 16,047
1	1	Clerk	$21,091	0%+50%=50%	$ 10,546	$ 10,546
TOTAL PERSONNEL COST:					**$ 110,334**	**$ 98,426**

2 EMPLOYEE RELATED EXPENSES

Item	Basis			Service Cost	CPIP Cost
Health Insurance	$595.83 per mo x 12 mo X 1 @ 25%			$ 1,787	$ 1,787
	$595.83 per mo x 12 mo X 5 @ 50%			$ 17,875	$ 17,875
FICA	0.0765	X	$110,334	$ 8,441	$ 4,220
Workman's Comp	0.003	X	$110,334	$ 331	$ 166
Retirement	0.0985	X	$110,334	$ 10,868	$ 5,434
TOTAL ERE COST:				**$ 39,302**	**$ 29,483**

3 PROFESSIONAL AND OUTSIDE SERVICES

Item	Basis	Service Cost	CPIP Cost
N/A		$ -	$ -
TOTAL PROF & OUTSIDE COSTS:		**$ -**	**$ -**

4 TRAVEL

Item	Basis	Service Cost	CPIP Cost
Gas/Vehicles/Maint	$200 per month x 12 months	$ 2,700	$ 1,350
Per Diem	$25 per day for 20 days for 10 FTE's	$ 5,000	$ 4,000
TOTAL TRAVEL COSTS:		**$ 7,700**	**$ 5,350**

5 SPACE

Item	Basis	Service Cost	CPIP Cost
Rent - Globe Office	Rent $1,673 monthly X 12 months (Inclused elctricity, cleaning, water, etc.)	$ 20,076	$ 10,038
Sparkletts/Other Space Expense	$100 x 12 months	$ 1,200	$ 240
TOTAL SPACE COSTS:		**$ 21,276**	**$ 10,278**

6 EQUIPMENT

Item	Basis	Service Cost	CPIP Cost
N/A			
		$ -	$ -
TOTAL EQUIPMENT COSTS:		**$ -**	**$ -**

7 MATERIALS & SUPPLIES

Item	Basis	Service Cost	CPIP Cost
General Office Supplies	$200 per month x 6 FTE's x 12 months	$ 14,400	$ 10,800
Postage	$250 per month x 12 months	$ 3,000	$ 1,200
TOTAL MAT & SUPP COSTS:		**$ 17,400**	**$ 12,000**

8 OPERATING SERVICES

Item	Basis	Service Cost	CPIP Cost
Staff Training & Registration	$1000 for training sessions for 3 FTE's	$ 3,000	$ 3,000
	$1500 for out of state training for 2 FTE's (inlcudes flight, hotel & registration)	$ 3,000	$ 3,000
Printing, Publishing & Advertising Costs	4 publications @ $200 in local papers	$ 800	$ 160
Local Fax, 800 Line, Phone Line & Service Maintenance, Leases Agreements & Memberships/Dues	$1,713.30 x 12 months	$ 20,560	$ 9,764
TOTAL OPERATING SERVICE COSTS:		**$ 27,360**	**$ 15,924**

9 INDIRECT COSTS

Item	Basis	Service Cost	CPIP Cost
N/A			
		$ -	$ -
TOTAL INDIRECT COSTS:		**$ -**	**$ -**

10	SUBTOTAL ADMINISTRATIVE COSTS:	$ 223,372	$ 171,459

11 VOUCHERS

Item			Service Cost	CPIP Cost
.	LIHEAP	*77*	$ 222,500	$ 222,500
2	LIHCON	*78*	$ 25,055	$ 25,055
3	LLVG		$ -	$ -
4	NHN	*70*	$ 865	$ 865
5	TANF	*49*	$ 19,293	$ 19,293
6	ESG	*17*	$ 6,659	$ 6,659
TOTAL VOUCHER COSTS:			**$ 274,372**	**$ 274,372**

12			
	TOTAL COSTS:	$ 497,744	$ 445,831

REVENUE SOURCES:		
CPIP Case Mgt.	$ 445,981	$ 445,831
CPIP CSV-B	$ 150,000	
CPIP CSV-C	$ -	
TOTAL REVENUE:	**$ 595,981**	**$ 445,831**

TOTAL REVENUE:	**$ 595,981**	**$ 445,831**

CMT-A Case Management ISB 10-11
Submitted 04/23/2010

ITEMIZED SERVICE BUDGET
FOR CONTRACT SERVICE: Community Services
PROVIDER NAME: Gila County Community Action Program
CONTRACT PERIOD: 7-01-10 TO 6-30-11
Attachment B

1 PERSONNEL

Number of Positions	FTE Level	Position Title	Salary for Contract Period	% Allocated to Service A+ D = Total	Total Service Cost	CPIP Cost
1	1	Community Services Director	$81,994	50%+0=50%	$ 40,997	$ 4,100
1	1	Community Services Deputy Director	$67,309	50%+0=50%	$ 33,654	$ 3,365
1	1	Divisional Program Manager	$55,245	50%+0=50%	$ 27,622	$ 5,524
1	1	Divisional Special Projects	$27,908	50%+0=50%	$ 13,954	$ 5,582
1	1	Divisional Assistant	$32,885	50%+0=50%	$ 16,442	$ 6,577
1	1	Program Manager	$47,632	25%+25=50%	$ 23,816	$ 23,816
1	1	Case Manager	$30,534	0%+50%=50%	$ 15,267	$ 15,267
1	1	Case Manager	$32,094	0%+50%=50%	$ 16,047	$ 16,047
1	1	Clerk	$21,091	0%+50%=50%	$ 10,546	$ 10,546
TOTAL PERSONNEL COST:					**$ 198,347**	**$ 90,825**

2 EMPLOYEE RELATED EXPENSES

Item	Basis			Service Cost	CPIP Cost
Health Insurance	$595.83 per mo x 12 mo X 2			$ 14,300	$ 715
	$595.83 per mo x 12 mo X 1			$ 7,150	$ 715
	$595.83 per mo x 12 mo X 2			$ 14,300	$ 2,860
	$595.83 per mo x 12 mo X 4			$ 28,600	$ 14,300
FICA	0.0765	X	$198,347	$ 15,174	$ 7,587
W nan's Comp	0.003	X	$198,347	$ 595	$ 298
Retirement	0.0985	X	$198,347	$ 19,537	$ 9,769
TOTAL ERE COST:				**$ 99,655**	**$ 36,243**

3 PROFESSIONAL AND OUTSIDE SERVICES

Item	Basis	Service Cost	CPIP Cost
N/A		$ -	$ -
TOTAL PROF & OUTSIDE COSTS:		**$ -**	**$ -**

4 TRAVEL

Item	Basis	Service Cost	CPIP Cost
Gas/Vehicles/Maint	$321.17 per month x 12 months	$ 6,000	$ 5,832
Per Diem	$25 per day for 20 days for 5 FTE's	$ 2,500	$ 2,500
TOTAL TRAVEL COSTS:		**$ 8,500**	**$ 8,332**

5 SPACE

Item	Basis	Service Cost	CPIP Cost
N/A		$ -	$ -
TOTAL SPACE COSTS:		**$ -**	**$ -**

6 EQUIPMENT

Item	Basis	Service Cost	CPIP Cost
N		$ -	$ -
TOTAL EQUIPMENT COSTS:		**$ -**	**$ -**

7 MATERIALS & SUPPLIES

Item	Basis	Service Cost	CPIP Cost
N/A		$ -	$ -
TOTAL MAT & SUPP COSTS:		**$ -**	**$ -**

8 OPERATING SERVICES

Item	Basis	Service Cost	CPIP Cost
Staff Training & Registration	$500 for training sessions for 2 FTE's @ 100%	$ 1,000	$ 1,000
Local Fax, 800 Line, Phone Line & Service Maintenance, Leases Agreements & Memberships/Dues	$1,000 x 12 months	$ 12,000	$ 3,600
TOTAL OPERATING SERVICE COSTS:		**$ 13,000**	**$ 4,600**

9 INDIRECT COSTS

Item	Basis	Service Cost	CPIP Cost
N/A		$ -	$ -
TOTAL INDIRECT COSTS:		**$ -**	**$ -**

10	**SUBTOTAL ADMINISTRATIVE COSTS:**	**$ 319,503**	**$ 140,000**

11 VOUCHERS

Item		Service Cost	CPIP Cost
Vouchers - Direct Client Services	Average $500 x 20 households	$ 10,000	$ 10,000
TOTAL VOUCHER COSTS:		**$ 10,000**	**$ 10,000**

12	**TOTAL COSTS:**	**$ 329,503**	**$ 150,000**

REVENUE SOURCES:

CPIP CSV	$ 150,000	$ 150,000
CPIP Case Mgt.	$ 445,831	
TOTAL REVENUE:	**$ 595,831**	**$ 150,000**

TOTAL REVENUE:	**$ 595,831**	**$ 150,000**

ITEMIZED SERVICE BUDGET
FOR CONTRACT SERVICE: Community Services AARA (Stimulus)
PROVIDER NAME: Gila County Community Action Program
CONTRACT PERIOD: 7-01-10 TO 6-30-11
Attachment C

1 PERSONNEL

Number of Positions	FTE Level	Position Title	Salary for Contract Period	% Allocated to Service A+ D = Total	Total Service Cost	CPIP Cost
N/A					$ -	$ -
TOTAL PERSONNEL COST:					$ -	$ -

2 EMPLOYEE RELATED EXPENSES

Item	Basis	Service Cost	CPIP Cost
N/A		$ -	$ -
TOTAL ERE COST:		$ -	$ -

3 PROFESSIONAL AND OUTSIDE SERVICES

Item	Basis	Service Cost	CPIP Cost
N/A		$ -	$ -
TOTAL PROF & OUTSIDE COSTS:		$ -	$ -

4 TRAVEL

Item	Basis	Service Cost	CPIP Cost
N		$ -	$ -
TOTAL TRAVEL COSTS:		$ -	$ -

5 SPACE

Item	Basis	Service Cost	CPIP Cost
N/A		$ -	$ -
TOTAL SPACE COSTS:		$ -	$ -

6 EQUIPMENT

Item	Basis	Service Cost	CPIP Cost
N/A		$ -	$ -
TOTAL EQUIPMENT COSTS:		$ -	$ -

7 MATERIALS & SUPPLIES

Item	Basis	Service Cost	CPIP Cost
Outreach/media materials & supplies for clients for CARE Fair and EITC activities.	$50 x 500 individuals for both activites	$ -	$ -
TOTAL MAT & SUPP COSTS:		$ -	$ -

8 OPERATING SERVICES

	Basis	Service Cost	CPIP Cost
		$ -	$ -
TOTAL OPERATING SERVICE COSTS:		**$ -**	**$ -**

9 INDIRECT COSTS

Item	Basis	Service Cost	CPIP Cost
N/A		$ -	$ -
TOTAL INDIRECT COSTS:		**$ -**	**$ -**

10	SUBTOTAL ADMINISTRATIVE COSTS:	$ -	$ -

11 VOUCHERS

Item		Service Cost	CPIP Cost
Vouchers - Direct Client Services	Average $1,000 x 125 households	$ -	$ -
TOTAL VOUCHER COSTS:		**$ -**	**$ -**

12	TOTAL COSTS:	$ -	$ -

REVENUE SOURCES:

CPIP CSV	$ -	$ -
TOTAL REVENUE:	**$ -**	**$ -**

TOTAL REVENUE:	**$ -**	**$ -**

CSV-C ISB 10-11
Submitted 04/23/10

GILA COUNTY ATTORNEY
Daisy Flores

Re: County Attorney's Office approval of IGA pursuant to A.R.S. § 11-952(D).

To whom it may concern:

The County Attorney's Office has reviewed the Intergovernmental Agreement attached to this agenda item and has determined that it is in its "proper form" and "is within the powers and authority granted under the laws of this state to such public agency or public procurement unit" pursuant to A.R.S. § A.R.S. § 11-952(D).

Explanation of the Gila County Attorney's Office Intergovernmental Agreement (IGA) Review

A.R.S. § 11-952(D) requires that

> every agreement or contract involving any public agency or public procurement unit of this state . . . before its execution, shall be submitted to the attorney for each such public agency or public procurement unit, who shall determine whether the agreement is in proper form and is within the powers and authority granted under the laws of this state to such public agency or public procurement unit.

In performing this review, the County Attorney's Office reviews IGAs to see that they are in "proper form" prior to their execution. "Proper form" means that the contract conforms to fundamental contract law, conforms to specific legislative requirements, and is within the powers and authority granted to the public agency. It does not mean that the County Attorney's Office approves of or supports the policy objectives contained in the IGA. That approval is solely the province of the public agency through its elected body.

Likewise, this approval is not a certification that the IGA has been properly executed. Proper execution can only be determined after all the entities entering into the IGA have taken legal action to approve the IGA. There is no statutory requirement for the County Attorney's Office to certify that IGAs are properly executed.

Nonetheless, it is imperative for each public agency to ensure that each IGA is properly executed because A.R.S. § 11-952(F) requires that "[a]ppropriate action … applicable to the governing bodies of the participating agencies approving or extending the duration of the … contract shall be necessary before any such agreement, contract or extension may be filed or become effective." This can be done by ensuring that the governing body gives the public proper notice of the meeting wherein action will be taken to approve the IGA, that the item is adequately described in the agenda accompanying the notice, and that the governing body takes such action. Any questions regarding whether the IGA has been properly executed may be directed to the County Attorney's Office.

Proper execution of IGAs is important because A.R.S. § 11-952(H) provides that "[p]ayment for services under this section shall not be made unless pursuant to a fully approved written contract." Additionally, A.R.S. § 11-952(I) provides that "[a] person who authorizes payment of any monies in violation of this section is liable for the monies paid plus twenty per cent of such amount and legal interest from the date of payment."

The public agency or department submitting the IGA for review has the responsibility to read and understand the IGA in order to completely understand its obligations under the IGA if it is ultimately approved by the public entity's board. This is because while the County Attorney's Office can approve the IGA as to form, the office may not have any idea whether the public agency has the capacity to actually comply with its contractual obligations. Also, the County Attorney's Office does not monitor IGA compliance. Hence the public entity or submitting department will need to be prepared to monitor their own compliance. A thorough knowledge of the provisions of the IGA will be necessary to monitor compliance.

Before determining whether an IGA contract "is in proper form," the County Attorney's Office will answer any questions or concerns the public agency has about the contract. It is the responsibility of the public agency or department submitting the IGA for review to ask any specific questions or address any concerns it has about the IGA to the County Attorney's Office at the same time they submit the IGA for review. Making such an inquiry also helps improve the County Attorney's Office review of the IGA because it will help focus the review on specific issues that are of greatest concern to the public agency. Failing to make such an inquiry when the agency does have issues or concerns will decrease the ability of the County Attorney's Office to meaningfully review the IGA.

ARF-1360 **Consent Agenda Item 4- H**

Regular BOS Meeting

Meeting Date: 08/07/2012

Submitted For: Linda Eastlick, Elections Director

Submitted By: David Rogers, Elections Specialist, Elections Department

Department: Elections Department

Information

Request/Subject

Intergovernmental Agreements for Election Services between Gila County and Pine Creek Canyon Domestic Water Improvement District and Rim Trail Domestic Water Improvement District.

Background Information

The Gila County Recorder's Office and Elections Department perform election services for various governmental agencies and special districts within Gila County.

Changes to County policy with regard to the conduct of jurisdictional elections were adopted by the Board of Supervisors on February 7, 2012. These changes provide for a master intergovernmental agreement to be signed for each participating jurisdiction. Each master agreement will remain in effect unless one of the parties cancels the agreement.

A Menu of Services will be completed for each election. The Menu includes a fee schedule for each type of service requested of the Recorder's Office or Elections Department.

Evaluation

The Pine Creek Canyon Domestic Water Improvement District and the Rim Trail Domestic Water Improvement District have requested that Gila County conduct their governing board member elections.

Conclusion

At this time, the Pine Creek Canyon Domestic Water Improvement District and the Rim Trail Domestic Water Improvement District wish to enter into Master Agreements with Gila County for election services.

Recommendation

The Elections Director recommends that the Board of Supervisors approve the Intergovernmental Agreements for Election Services between Gila County and the Pine Creek Canyon Domestic Water Improvement District and between Gila County and the Rim Trail Domestic Water Improvement District.

Suggested Motion

Approval of Intergovernmental Agreements for Election Services between Gila County and the Pine Creek Canyon Domestic Water Improvement District and between Gila County and the Rim Trail Domestic Water Improvement District to provide election services.

Attachments

IGA with Rim Trail Domestic Water Improvement District

IGA with Pine Creek Canyon Domestic Water Improvement District
Menu of Services
Legal Explanation

GILA COUNTY BOARD OF SUPERVISORS
1400 EAST ASH STREET, GLOBE, AZ 85501

GILA COUNTY RECORDER
1400 EAST ASH STREET, GLOBE, AZ 85501

GILA COUNTY DEPARTMENT OF ELECTIONS
5515 S. APACHE AVENUE, SUITE 900, GLOBE, AZ 85501

INTERGOVERNMENTAL AGREEMENT FOR ELECTION SERVICES

WHEREAS, the County of Gila has a comprehensive voting system and certified Elections Officials; and

WHEREAS, the Rim Trail Domestic Water Improvement District seeks Gila County assistance in the conduct of elections; and

WHEREAS, it is good public policy and benefits the citizens of Gila County and is the purpose of this Agreement to make available to any City, Town, School District, or Special Election Jurisdiction within the limits of Gila County the services already in existence;

NOW THEREFORE IT IS AGREED by and between the County of Gila, hereinafter called the "County", through the agency of the Gila County Recorder and the Gila County Department of Elections, and the Rim Trail Domestic Water Improvement District hereinafter called the "Jurisdiction," pursuant to ARS §16-172, 16-205 and §11-951 et seq., an agreement follows:

I. <u>The County shall:</u>

   a. Provide the services related to each election which are offered in the current Gila County, Arizona Jurisdiction Menu of Services, hereinafter Menu, and which are requested by the Jurisdiction as indicated on the Menu;

b. Make available support services, ballots, voting equipment, vote tallying equipment, precinct supplies, and such other election materials and services as may be required for proper conduct of elections as agreed by the parties;

c. To the extent the County determines it is able, provide personnel necessary to effectively administer and election as agreed by the parties;

d. Furnish election administrative materials, which have been prepared for County elections, to the jurisdiction as agreed by the parties;

e. Conduct early balloting and election functions at the polls as agreed by the parties.

II. <u>The Jurisdiction shall:</u>

a. Submit to the Recorder's Office and the Department of Elections a completed Menu indicating which election services Jurisdiction is requesting the County to perform for each election. At least 150 calendar days prior to the election.

b. Reimburse the County for costs as noted in the Menu for each election where services are requested by the Jurisdiction. Such costs shall include election materials, postage, supplies and equipment and/or personnel or any other service required in direct support of the Jurisdiction Elections;

c. Notify the County Recorder to arrange verification of signatures on Early Voting Requests and ballots to be verified;

d. Be responsible for the security of all ballots tabulated by officials and vendors other than the County and ensure that election functions performed by the Jurisdiction or its outside vendors comply with applicable law and regulations of the Secretary of State;

e. Comply with County restrictions on use and dissemination of voter information and ensure use of voter registration information for Jurisdiction's election purposes is as authorized by Arizona Revised Statutes, Title 16, Section 168;

f. Provide Gila County with notification of preclearance requests made under Section 5 of the Voting Rights Act or request the County prepare preclearance requests to the Department of Justice for elections as necessary.

g. Provide a list of inactive voters who voted or allow the Gila County Recorder to scan jurisdiction's rosters for inactive voters who voted following a jurisdictional election, for the purpose of re-establishing the inactive voter to active status,

and for updating the County's voter registration files to reflect address and other registration changes requested by voters;

h. Be responsible for the creation, translation, printing and mailing of all publicity pamphlets;

i. Reimburse the County for any costs associated with damage or repair of election equipment which may occur while such election equipment is in the possession of the Jurisdiction.

III. <u>The County and the Jurisdiction mutually covenant and agree:</u>

a. The Jurisdiction will be responsible for all submissions required under Section 5 of the Voting Rights Act to the Department of Justice

b. Charges for printing of ballot pages, sample ballots, ballot labels, or any other items commercially produced will be billed directly to the Jurisdiction by the commercial vendor providing such services, unless alternate arrangements are agreed to in a Menu to be completed for each election;

c. Separate invoices may be submitted to the Jurisdiction by the Gila County Recorder's Office and the Gila County Department of Elections;

d. Each party is responsible to finance and maintain a budget for its respective responsibilities and obligations under this agreement;

e. Each party will use its personnel, property, and resources for accomplishing its respective obligations under this agreement;

f. Each party will maintain its respective property after termination of this agreement and will eventually dispose of any elections materials used under this agreement in a manner provided for by state and federal law. In the event conflict arises between the County and Jurisdiction over the use of voting equipment, vote tallying equipment, or County personnel, the County will have priority usage. The County agrees to make every effort to reconcile conflicts and make reasonable provisions with the Jurisdiction so neither party will suffer as a consequence of conflict;

g. This contract will continue in full force and effect from year to year, without renewal, subject to cancellation for the immediate calendar year by either party not later than December 1 of any year;

h. This contract shall become effective from and after the date of its execution by the governing bodies of both the County and the Jurisdiction;

i. In the event of termination, any real or personal property belonging to either party and furnished pursuant to this Agreement shall be returned to the furnishing party;

j. This Agreement may be canceled pursuant to the provisions of ARS §38-511 which are incorporated into this agreement by this reference.

IV. The parties understand and agree that the Gila County Recorder's office is responsible for voter registration, mailing of ballots, signature rosters, registers, 120-day notices, and signature verification of ballots. The Gila County Department of Elections is responsible for Department of Justice preclearance of elections, election equipment, election staffing and training, ballot layout, ballot printing, ballot processing, and ballot tabulation, and reporting. Services will only be provided as agreed to in the Menu to be completed for each election.

V. By signing this agreement the Jurisdiction agrees to indemnify and hold harmless the County from any claims resulting from the County participating in the election and agrees to the terms specified in the agreement

Intergovernmental Agreement for Election Services

Signed this _____ day of _____, 2012

GILA COUNTY BOARD OF SUPERVISORS

_____

Tommie C. Martin
Chairman

RIM TRAIL DOMESTIC WATER IMPROVEMENT DISTRICT

Harry D Jones

Harry Jones
District Manager

ATTEST

_____

Marian Sheppard
Deputy Clerk of the Board

APPROVED AS TO FORM

_____

Bryan B. Chambers
Chief Deputy County Attorney

GILA COUNTY BOARD OF SUPERVISORS
1400 EAST ASH STREET, GLOBE, AZ 85501

GILA COUNTY RECORDER
1400 EAST ASH STREET, GLOBE, AZ 85501

GILA COUNTY DEPARTMENT OF ELECTIONS
5515 S. APACHE AVENUE, SUITE 900, GLOBE, AZ 85501

INTERGOVERNMENTAL AGREEMENT FOR ELECTION SERVICES

WHEREAS, the County of Gila has a comprehensive voting system and certified Elections Officials; and

WHEREAS, the Pine Creek Canyon Domestic Water Improvement District seeks Gila County assistance in the conduct of elections; and

WHEREAS, it is good public policy and benefits the citizens of Gila County and is the purpose of this Agreement to make available to any City, Town, School District, or Special Election Jurisdiction within the limits of Gila County the services already in existence;

NOW THEREFORE IT IS AGREED by and between the County of Gila, hereinafter called the "County", through the agency of the Gila County Recorder and the Gila County Department of Elections, and the Pine Creek Canyon Domestic Water Improvement District hereinafter called the "Jurisdiction," pursuant to ARS §16-172, 16-205 and §11-951 et seq., an agreement follows:

I. <u>The County shall:</u>

   a. Provide the services related to each election which are offered in the current Gila County, Arizona Jurisdiction Menu of Services, hereinafter Menu, and which are requested by the Jurisdiction as indicated on the Menu;

b. Make available support services, ballots, voting equipment, vote tallying equipment, precinct supplies, and such other election materials and services as may be required for proper conduct of elections as agreed by the parties;

c. To the extent the County determines it is able, provide personnel necessary to effectively administer and election as agreed by the parties;

d. Furnish election administrative materials, which have been prepared for County elections, to the jurisdiction as agreed by the parties;

e. Conduct early balloting and election functions at the polls as agreed by the parties.

II. The Jurisdiction shall:

a. Submit to the Recorder's Office and the Department of Elections a completed Menu indicating which election services Jurisdiction is requesting the County to perform for each election. At least 150 calendar days prior to the election.

b. Reimburse the County for costs as noted in the Menu for each election where services are requested by the Jurisdiction. Such costs shall include election materials, postage, supplies and equipment and/or personnel or any other service required in direct support of the Jurisdiction Elections;

c. Notify the County Recorder to arrange verification of signatures on Early Voting Requests and ballots to be verified;

d. Be responsible for the security of all ballots tabulated by officials and vendors other than the County and ensure that election functions performed by the Jurisdiction or its outside vendors comply with applicable law and regulations of the Secretary of State;

e. Comply with County restrictions on use and dissemination of voter information and ensure use of voter registration information for Jurisdiction's election purposes is as authorized by Arizona Revised Statutes, Title 16, Section 168;

f. Provide Gila County with notification of preclearance requests made under Section 5 of the Voting Rights Act or request the County prepare preclearance requests to the Department of Justice for elections as necessary.

g. Provide a list of inactive voters who voted or allow the Gila County Recorder to scan jurisdiction's rosters for inactive voters who voted following a jurisdictional election, for the purpose of re-establishing the inactive voter to active status,

and for updating the County's voter registration files to reflect address and other registration changes requested by voters;

h. Be responsible for the creation, translation, printing and mailing of all publicity pamphlets;

i. Reimburse the County for any costs associated with damage or repair of election equipment which may occur while such election equipment is in the possession of the Jurisdiction.

III. <u>The County and the Jurisdiction mutually covenant and agree:</u>

a. The Jurisdiction will be responsible for all submissions required under Section 5 of the Voting Rights Act to the Department of Justice

b. Charges for printing of ballot pages, sample ballots, ballot labels, or any other items commercially produced will be billed directly to the Jurisdiction by the commercial vendor providing such services, unless alternate arrangements are agreed to in a Menu to be completed for each election;

c. Separate invoices may be submitted to the Jurisdiction by the Gila County Recorder's Office and the Gila County Department of Elections;

d. Each party is responsible to finance and maintain a budget for its respective responsibilities and obligations under this agreement;

e. Each party will use its personnel, property, and resources for accomplishing its respective obligations under this agreement;

f. Each party will maintain its respective property after termination of this agreement and will eventually dispose of any elections materials used under this agreement in a manner provided for by state and federal law. In the event conflict arises between the County and Jurisdiction over the use of voting equipment, vote tallying equipment, or County personnel, the County will have priority usage. The County agrees to make every effort to reconcile conflicts and make reasonable provisions with the Jurisdiction so neither party will suffer as a consequence of conflict;

g. This contract will continue in full force and effect from year to year, without renewal, subject to cancellation for the immediate calendar year by either party not later than December 1 of any year;

h. This contract shall become effective from and after the date of its execution by the governing bodies of both the County and the Jurisdiction;

i. In the event of termination, any real or personal property belonging to either party and furnished pursuant to this Agreement shall be returned to the furnishing party;

j. This Agreement may be canceled pursuant to the provisions of ARS §38-511 which are incorporated into this agreement by this reference.

IV. The parties understand and agree that the Gila County Recorder's office is responsible for voter registration, mailing of ballots, signature rosters, registers, 120-day notices, and signature verification of ballots. The Gila County Department of Elections is responsible for Department of Justice preclearance of elections, election equipment, election staffing and training, ballot layout, ballot printing, ballot processing, and ballot tabulation, and reporting. Services will only be provided as agreed to in the Menu to be completed for each election.

V. By signing this agreement the Jurisdiction agrees to indemnify and hold harmless the County from any claims resulting from the County participating in the election and agrees to the terms specified in the agreement

Intergovernmental Agreement for Election Services

Signed this _____ day of _____, 2012

GILA COUNTY BOARD OF SUPERVISORS

_____

Tommie C. Martin
Chairman

PINE CREEK CANYON DOMESTIC WATER IMPROVEMENT DISTRICT

_____

Harry Jones
District Manager

ATTEST

_____

Marian Sheppard
Deputy Clerk of the Board

APPROVED AS TO FORM

_____

Bryan B. Chambers
Chief Deputy County Attorney

GILA COUNTY, ARIZONA

JURISDICTION MENU OF SERVICES

The Jurisdiction is responsible for meeting with BOTH the Gila County Recorder AND the Gila County Department of Elections Director to complete this Menu of Services for each election			
Jurisdiction Name			
Election Title	Election Date		
Last Day to Register	No. Registered Voters		
Primary Contact			
Work Phone	Email		
Cell Phone	Fax		
Home Phone	Alternate No.		
Secondary Contact			
Work Phone	Email		
Cell Phone	Fax		
Home Phone	Alternate No.		
Attorney Contact			
Work Phone	Email		
Cell Phone	Fax		
Home Phone	Alternate No.		
Candidates? (If Yes, complete section below)	Yes	No	
Offices to be Elected:		Number to Elect	
1			
2			
3			
4			
5			
6			
Last Day for Candidate Filing			
Ballot Question? (If Yes, complete section below by identifying type and number of measures)	Yes	No	
Copy of action calling election attached?	Yes	No	
Meeting minutes, resolution, notice of election, etc. If not attached, enter date when information will be sent.	Due Date		

GILA COUNTY, ARIZONA

JURISDICTION MENU OF SERVICES

Logic and Accuracy Tests will be performed by the Gila County Department of Elections at 5515 S Apache Ave, Globe, AZ on (Enter Date)	Date
Ballot layout information including candidate names and ballot question text must be provided to the Gila County Department of Elections by the Jurisdiction no later than 5:00 pm 90 days prior to the election (Enter Date)	Due Date
Gila County Department of Elections shall email "Unofficial Early Results" to the Jurisdiction on election night shortly after 8:00 pm. Ballot Tabulation shall be reported to Jurisdiction by (Enter Date)	Due Date
Storage and Retention. All materials related to the election including signature rosters, voted ballots, official envelopes, early ballots, etc. are the property of the Jurisdiction. County shall return materials via (Select Which Method is Preferred)	Mail Pick-up Delivery

Indicate with an "X" Services to be Performed by the County	**YES**	**NO**	**Resp**	**Cost**
Early Ballot/120-Day Notice Processing per Ballot Mailed Out (includes outgoing postage)			Recorder	$2.50
Early Ballot Signature Verification per Signature			Recorder	$0.50
Provisional and Conditional Ballot Verification per ballot			Recorder	$3.00
Petition Signature Verification per Signature			Recorder	$3.00
Voter Registration or other Voter Lists:			Recorder	
Printed per Name			Recorder	$0.05
Electronic per Name Plus Cost of Media			Recorder	$0.01
CD per CD-Rom			Recorder	$3.00
Mailing Labels per Name			Recorder	$0.10
Registers/Rosters per Name			Recorder	$0.05
Roster Paper			Recorder	$0.20
Registers/Rosters per Set			Recorder	$6.00
US Dept of Justice Pre-Clearance (if Jurisdiction desires the County to create)			Elections	$25.00/hour
Basic Fee for Service per Registered Voter (Special or Not Consolidated)			Elections	$1.50
Basic Fee for Service per Registered Voter (Consolidated Election)			Elections	$0.50
Ballot Question per Question			Elections	$100.00
Sample Ballot Creation			Elections	Actual Cost
Sample Ballot Mailing			Elections	Actual Cost
Ballot Layout and Printing			Elections	Actual Cost
Recruit and Train Election Workers			Elections	$17.00/hour
Accu-Vote Ballot Scanner Price per Unit			Elections	$25.00
Touchscreen Unit Price per Unit			Elections	$25.00
Memory Card Price per Card			Elections	$25.00

GILA COUNTY, ARIZONA

JURISDICTION MENU OF SERVICES

County Personnel Labor Rate			Recorder and Elections	$17.00/hour
County Personnel Overtime Labor Rate			Recorder and Elections	$25.50/hour
Temporary Early Board or Other Worker Rate			Recorder and Elections	Min. Wage (Currently $7.65/hour)
Mileage Reimbursement			Recorder and Elections	County Rate (Currently $0.51/mile)
Postage			Recorder and Elections	Actual Cost
Written Spanish Translation			Recorder and Elections	Actual Cost
Ballot Box (Price per Box)			Recorder and Elections	$25.00
Additional Services (as requested by the Jurisdiction) will be billed at actual cost. Such services may include consulting fees, special reports, computer programming, etc.			Recorder and Elections	Actual Cost
Additional Services Requested (Specify)				
Estimated Cost of Elections				
Gila County Recorder				
Gila County Department of Elections				

Jurisdiction Authorized Signature	
	Date
Gila County Recorder Authorized Signature	
	Date
Gila County Department of Elections Authorized Signature	
	Date

GILA COUNTY ATTORNEY
Daisy Flores

Re: County Attorney's Office approval of IGA pursuant to A.R.S. § 11-952(D).

To whom it may concern:

The County Attorney's Office has reviewed the Intergovernmental Agreement attached to this agenda item and has determined that it is in its "proper form" and "is within the powers and authority granted under the laws of this state to such public agency or public procurement unit" pursuant to A.R.S. § A.R.S. § 11-952(D).

Explanation of the Gila County Attorney's Office Intergovernmental Agreement (IGA) Review

A.R.S. § 11-952(D) requires that

> every agreement or contract involving any public agency or public procurement unit of this state . . . before its execution, shall be submitted to the attorney for each such public agency or public procurement unit, who shall determine whether the agreement is in proper form and is within the powers and authority granted under the laws of this state to such public agency or public procurement unit.

In performing this review, the County Attorney's Office reviews IGAs to see that they are in "proper form" prior to their execution. "Proper form" means that the contract conforms to fundamental contract law, conforms to specific legislative requirements, and is within the powers and authority granted to the public agency. It does not mean that the County Attorney's Office approves of or supports the policy objectives contained in the IGA. That approval is solely the province of the public agency through its elected body.

Likewise, this approval is not a certification that the IGA has been properly executed. Proper execution can only be determined after all the entities entering into the IGA have taken legal action to approve the IGA. There is no statutory requirement for the County Attorney's Office to certify that IGAs are properly executed.

Nonetheless, it is imperative for each public agency to ensure that each IGA is properly executed because A.R.S. § 11-952(F) requires that "[a]ppropriate action … applicable to the governing bodies of the participating agencies approving or extending the duration of the … contract shall be necessary before any such agreement, contract or extension may be filed or become effective." This can be done by ensuring that the governing body gives the public proper notice of the meeting wherein action will be taken to approve the IGA, that the item is adequately described in the agenda accompanying the notice, and that the governing body takes such action. Any questions regarding whether the IGA has been properly executed may be directed to the County Attorney's Office.

Proper execution of IGAs is important because A.R.S. § 11-952(H) provides that "[p]ayment for services under this section shall not be made unless pursuant to a fully approved written contract." Additionally, A.R.S. § 11-952(I) provides that "[a] person who authorizes payment of any monies in violation of this section is liable for the monies paid plus twenty per cent of such amount and legal interest from the date of payment."

The public agency or department submitting the IGA for review has the responsibility to read and understand the IGA in order to completely understand its obligations under the IGA if it is ultimately approved by the public entity's board. This is because while the County Attorney's Office can approve the IGA as to form, the office may not have any idea whether the public agency has the capacity to actually comply with its contractual obligations. Also, the County Attorney's Office does not monitor IGA compliance. Hence the public entity or submitting department will need to be prepared to monitor their own compliance. A thorough knowledge of the provisions of the IGA will be necessary to monitor compliance.

Before determining whether an IGA contract "is in proper form," the County Attorney's Office will answer any questions or concerns the public agency has about the contract. It is the responsibility of the public agency or department submitting the IGA for review to ask any specific questions or address any concerns it has about the IGA to the County Attorney's Office at the same time they submit the IGA for review. Making such an inquiry also helps improve the County Attorney's Office review of the IGA because it will help focus the review on specific issues that are of greatest concern to the public agency. Failing to make such an inquiry when the agency does have issues or concerns will decrease the ability of the County Attorney's Office to meaningfully review the IGA.

ARF-1359 **Consent Agenda Item 4- I**

Regular BOS Meeting

Meeting Date: 08/07/2012

Submitted For: Linda Eastlick, Elections Director

Submitted By: Linda Eastlick, Elections Director, Elections Department

Department: Elections Department

Information

Request/Subject

Order to Cancel Precinct Committeeman elections.

Background Information

ARS 16-410 provides that if the total number of persons who file a nomination petition for a candidate and the number of persons who file a nomination paper for a write-in candidate is less than or equal to the number of positions to be filled, the county board of supervisors may cancel the election no earlier than seventy-five days before the election and appoint the person or persons who filed the nomination petition or nomination paper. A person who is appointed pursuant to this subsection is fully vested with the powers and duties of the office as if elected to that office.

Evaluation

Precinct committeeman elections are covered by this statute.

Conclusion

In those precincts where the number of candidates filing nomination petitions or write-in nomination papers is less than or equal to the number of positions available, it is permissible to cancel these elections

Recommendation

The Elections Director recommends the Board of Supervisors approve the Order to cancel precinct elections and appoint the precinct committeeman shown on Attachment A.

Suggested Motion

Adoption of an Order canceling precinct elections and appointing the precinct committeemen shown on Attachment A attached to Order who have filed nomination petitions or nominating papers for precinct committeeman of their party in the precinct shown.

Attachments

ARS 16-410

Order to Cancel PC Elections

Attachment A - PC Listing

Arizona State Legislature

Bill Number Search:

Fiftieth Legislature - Second Regular Session

change session | printer friendly version

Email a Member | Email Webmaster

Senate House Legislative Council JLBC More Agencies Bills Committees Calendars/News

ARS TITLE PAGE NEXT DOCUMENT PREVIOUS DOCUMENT

16-410. Cancellation of certain elections; appointment to office; filling vacancies

A. Notwithstanding any other law, in any election that is to be held pursuant to title 15, title 48 or section 16-822, if the total of the number of persons who file a nomination petition for a candidate and the number of persons who file a nomination paper for a write-in candidate as prescribed by chapter 3, articles 2 and 3 of this title is less than or equal to the number of positions to be filled at the election for which the nomination petition or nomination paper is filed, the county board of supervisors may cancel the election no earlier than seventy-five days before the election and appoint the person or persons who filed the nomination petition or nomination paper to fill the position for the term of office for which the candidate was nominated by the qualified electors.

B. A person who is appointed pursuant to subsection A of this section is fully vested with the powers and duties of the office as if elected to that office.

C. If no nomination petitions for a candidate and no nomination papers for a write-in candidate have been filed to fill the position for which the election was being held, the position is deemed vacant and shall be filled in accordance with laws governing the filling of those vacancies.

D. Canceled elections shall not appear on any ballot, but if a withdrawal or disqualification of one or more candidates results in the cancellation of an election after the ballots have been printed, the results of any vote for that office shall not be canvassed.

©2007 Arizona State Legislature.

privacy statment

ORDER

ORDER OF THE GILA COUNTY BOARD OF SUPERVISORS TO CANCEL PRECINCT ELECTIONS AND APPOINT PRECINCT COMMITTEEMEN WHO HAVE FILED NOMINATING PETITIONS.

WHEREAS, pursuant to A.R.S. §16-410(A) if the total number of persons who file a nomination petition for a candidate and the number of persons who file a nomination paper for a write-in candidate is less than or equal to the number of positions to be filled, the county board of supervisors may cancel the election no sooner than seventy-five days before the election and appoint the person or persons who filed the nomination petition or nomination paper A precinct committeeman who is appointed pursuant to this subsection is fully vested with the powers and duties of the office as if elected to that office.

NOW, THEREFORE, IT IS ORDERED, that the Board of Supervisors does hereby cancel precinct elections and appoint the precinct committeemen shown on Attachment A who have filed nomination petitions or nomination papers for precinct committeeman of their party in the precinct shown.

DATED this 7th day of August, 2012, in Globe, Gila County, Arizona.

GILA COUNTY BOARD OF SUPERVISORS

_____

Tommie C. Martin, Chairman

Attest:

_____

Marian Sheppard, Chief Deputy Clerk

ATTACHMENT A
GILA COUNTY
2012 Precinct Committeemen Appointments

DEMOCRATIC PC'S	
Precinct	**Name**
Central Heights	Hays, Patsy
Claypool 1	Johnson, Cedric, Sr.
	Mancha, Rose
Claypool 3	Johnson, Curtis L.
Globe 1	Nye, Mickie
Globe 2	Casillas, Carmen
Globe 6	Bishop, Matthew
Globe 6	Rodriguez, Shaya
Globe 7	Lenox, Gail
Globe 8	Gardea, Peter B.
Globe 8	Overgaard, Gayl W.
Miami 3	Hurtado, Marivel
	Hurtado, Susana
Payson 3	Foster, Gerald W.
Payson 3	Herbster, Myra J.
Payson 3	Spears, Fern T.
Payson 3	Tilley, Christine
Payson 5	Schriner, George
Payson 5	Schriner, Shirley A.
Payson 8	Blair, Ed
Payson 8	Whitely, Maxine
Payson 8	Whitely, Sydney
Pine-Strawberry East	Lawler, Nan
Pine-Strawberry East	Semrad, Sherry

ATTACHMENT A
GILA COUNTY
2012 Precinct Committeemen Appointments

REPUBLICAN PC'S	
Precinct	**Name**
Central Heights	Cook, Shawna
Central Heights	Mitchell, Tammy
Claypool 2	Stubbs, Darrell
Copper Basin	Clark, Charles
Copper Basin	Clark, Pat
Gisela	Haught, Frieda
Gisela	O'Connell, Judith
Globe 4	McDonald, Donald
Globe 11	Klinger, Fred
Globe 11	Neldon, Ron
Globe 11	Werrell, Bradley
Payson 1	Begay, Paige
Payson 1	Spurlock, Nancy
Payson 1	Spurlock, Pat
Payson 2	Castleman, Don
Payson 2	Dye, Shirley Jean
Payson 2	Langham, Jeanie
Payson 2	Langham, Stan
Payson 2	Levenson, Lewis M.
Payson 2	Loyd, Jeffrey M.
Payson 2	Shepherd, Barbara
Payson 2	Wales, Bruce
Payson 3	Bailey, Cheryl M.
Payson 3	Bailey, John Douglas
Payson 3	Baran, Diane
Payson 3	Baran, Ronald
Payson 3	Dorgan, Penny
Payson 3	Grennon, Vincent Xavier
Payson 3	Hathhorn, Lolly

ATTACHMENT A
GILA COUNTY
2012 Precinct Committeemen Appointments

REPUBLICAN PC'S	
Payson 3	Jackson, Patricia
Payson 3	Justice, Elouise
Payson 3	Lucas, Ted
Payson 3	Schuler, Suecarol
Payson 4	Brown, Colleen
Payson 4	Brown, Howard
Payson 5	Campbell, Sharon J.
Payson 5	Flider, David
Payson 5	Joyner, Monica
Payson 5	Kirch, Mark
Payson 5	Low, Kathleen
Payson 5	Low, Richard
Payson 5	Powers, William Dollar "Bill"
Payson 6	Barton, Brenda
Payson 6	Chase, Carol
Payson 6	Chase, Ronald
Payson 6	Coffman, William
Payson 6	Silcock, Elizabeth
Payson 7	Cool, Vickie
Payson 7	Dudley, June
Payson 7	Friestad, Gregory D.
Payson 7	Friestad, Sharyn C.
Payson 8	Cox, Nancy A.
Payson 8	Randall, Wanda Peterson
Payson 8	Salwitz, Georgia
Payson 8	Steely, Patricia
Payson 8	Williams, Janet
Pine-Strawberry East	Grau, Linda
Pine-Strawberry East	O'Dell, Ken
Pine-Strawberry East	O'Dell, Linda

ATTACHMENT A
GILA COUNTY
2012 Precinct Committeemen Appointments

REPUBLICAN PC'S	
Pine-Strawberry West	Fuller, Jeanne
Pine-Strawberry West	Mickley, Kathie
Pine-Strawberry West	Mickley, Michael W.
Pine-Strawberry West	Morris, Gary Preston
Pine-Strawberry West	Mortensen, Charlotte
Pine-Strawberry West	Mortensen, Marvin
Pine-Strawberry West	Prechtel, David
Roosevelt	Burruel, Harold
Roosevelt	Burruel, Pamela
Star Valley	Durst, Lynn E.
Star Valley	Hibbert, Robert W.
Star Valley	Ihle, Patricia
Star Valley	Knoner, Don
Star Valley	Knoner, Marylyn
Star Valley	McKinney, Paul A.
Star Valley	Rowe, Joanne G.
Star Valley	Sanders, Randi
Star Valley	Seeman, Kenneth
Tonto Basin	Bernard, Madra
Tonto Basin	Davis, Florence Marie
Tonto Basin	Mitchell-Givler, Rosanne
Tonto Basin	Roberson, Patricia
Whispering Pines	Ascoli, Anne
Whispering Pines	Ascoli, Don M.
Young	LeFevre, M. Dee
Young	Wilson, Irv

ARF-1391 **Consent Agenda Item 4- J**

Regular BOS Meeting

Meeting Date: 08/07/2012

Submitted For: Linda Eastlick, Elections Director

Submitted By: David Rogers, Elections Specialist, Elections Department

Department: Elections Department

Information

Request/Subject

Intergovernmental Agreement for Election Services between Gila County and Whispering Pines Domestic Water Improvement District.

Background Information

The Gila County Recorder's Office and Department of Elections perform election services for various governmental agencies and special districts within Gila County.

Changes to County policy with regard to the conduct of jurisdictional elections were adopted by the Board of Supervisors on February 7, 2012. These changes provide for a master intergovernmental agreement to be signed for each participating jurisdiction. Each master agreement will remain in effect unless one of the parties cancels the agreement.

A Menu of Services will be completed for each election. The Menu includes a fee schedule for each type of service requested of the Recorder's Office or Department of Elections.

Evaluation

The Whispering Pines Domestic Water Improvement District has requested that Gila County conduct its governing board member elections.

Conclusion

At this time, the Whispering Pines Domestic Water Improvement District wishes to enter into an Intergovernmental Agreement with Gila County whereby Gila County will provide election services.

Recommendation

The Elections Director recommends the Board of Supervisors approve the Intergovernmental Agreement for Election Services between Gila County and the Whispering Pines Domestic Water Improvement District.

Suggested Motion

Approval of an Intergovernmental Agreement for Election Services between Gila County and the Whispering Pines Domestic Water Improvement District.

Attachments

IGA with Whispering Pines Domestic Water Improvement District

Menu of Services

Legal Explanation

GILA COUNTY BOARD OF SUPERVISORS
1400 EAST ASH STREET, GLOBE, AZ 85501

GILA COUNTY RECORDER
1400 EAST ASH STREET, GLOBE, AZ 85501

GILA COUNTY DEPARTMENT OF ELECTIONS
5515 S. APACHE AVENUE, SUITE 900, GLOBE, AZ 85501

INTERGOVERNMENTAL AGREEMENT FOR ELECTION SERVICES

WHEREAS, the County of Gila has a comprehensive voting system and certified Elections Officials; and

WHEREAS, the Whispering Pines Domestic Water Improvement District seeks Gila County assistance in the conduct of elections; and

WHEREAS, it is good public policy and benefits the citizens of Gila County and is the purpose of this Agreement to make available to any City, Town, School District, or Special Election Jurisdiction within the limits of Gila County the services already in existence;

NOW THEREFORE IT IS AGREED by and between the County of Gila, hereinafter called the "County", through the agency of the Gila County Recorder and the Gila County Department of Elections, and the Whispering Pines Domestic Water Improvement District hereinafter called the "Jurisdiction," pursuant to ARS §16-172, 16-205 and §11-951 et seq., an agreement follows:

I. <u>The County shall:</u>

a. Provide the services related to each election which are offered in the current Gila County, Arizona Jurisdiction Menu of Services, hereinafter Menu, and which are requested by the Jurisdiction as indicated on the Menu;

b. Make available support services, ballots, voting equipment, vote tallying equipment, precinct supplies, and such other election materials and services as may be required for proper conduct of elections as agreed by the parties;

c. To the extent the County determines it is able, provide personnel necessary to effectively administer and election as agreed by the parties;

d. Furnish election administrative materials, which have been prepared for County elections, to the jurisdiction as agreed by the parties;

e. Conduct early balloting and election functions at the polls as agreed by the parties.

II. The Jurisdiction shall:

a. Submit to the Recorder's Office and the Department of Elections a completed Menu indicating which election services Jurisdiction is requesting the County to perform for each election. At least 150 calendar days prior to the election.

b. Reimburse the County for costs as noted in the Menu for each election where services are requested by the Jurisdiction. Such costs shall include election materials, postage, supplies and equipment and/or personnel or any other service required in direct support of the Jurisdiction Elections;

c. Notify the County Recorder to arrange verification of signatures on Early Voting Requests and ballots to be verified;

d. Be responsible for the security of all ballots tabulated by officials and vendors other than the County and ensure that election functions performed by the Jurisdiction or its outside vendors comply with applicable law and regulations of the Secretary of State;

e. Comply with County restrictions on use and dissemination of voter information and ensure use of voter registration information for Jurisdiction's election purposes is as authorized by Arizona Revised Statutes, Title 16, Section 168;

f. Provide Gila County with notification of preclearance requests made under Section 5 of the Voting Rights Act or request the County prepare preclearance requests to the Department of Justice for elections as necessary.

g. Provide a list of inactive voters who voted or allow the Gila County Recorder to scan jurisdiction's rosters for inactive voters who voted following a jurisdictional election, for the purpose of re-establishing the inactive voter to active status,

and for updating the County's voter registration files to reflect address and other registration changes requested by voters;

h. Be responsible for the creation, translation, printing and mailing of all publicity pamphlets;

i. Reimburse the County for any costs associated with damage or repair of election equipment which may occur while such election equipment is in the possession of the Jurisdiction.

III. <u>The County and the Jurisdiction mutually covenant and agree:</u>

a. The Jurisdiction will be responsible for all submissions required under Section 5 of the Voting Rights Act to the Department of Justice

b. Charges for printing of ballot pages, sample ballots, ballot labels, or any other items commercially produced will be billed directly to the Jurisdiction by the commercial vendor providing such services, unless alternate arrangements are agreed to in a Menu to be completed for each election;

c. Separate invoices may be submitted to the Jurisdiction by the Gila County Recorder's Office and the Gila County Department of Elections;

d. Each party is responsible to finance and maintain a budget for its respective responsibilities and obligations under this agreement;

e. Each party will use its personnel, property, and resources for accomplishing its respective obligations under this agreement;

f. Each party will maintain its respective property after termination of this agreement and will eventually dispose of any elections materials used under this agreement in a manner provided for by state and federal law. In the event conflict arises between the County and Jurisdiction over the use of voting equipment, vote tallying equipment, or County personnel, the County will have priority usage. The County agrees to make every effort to reconcile conflicts and make reasonable provisions with the Jurisdiction so neither party will suffer as a consequence of conflict;

g. This contract will continue in full force and effect from year to year, without renewal, subject to cancellation for the immediate calendar year by either party not later than December 1 of any year;

h. This contract shall become effective from and after the date of its execution by the governing bodies of both the County and the Jurisdiction;

i. In the event of termination, any real or personal property belonging to either party and furnished pursuant to this Agreement shall be returned to the furnishing party;

j. This Agreement may be canceled pursuant to the provisions of ARS §38-511 which are incorporated into this agreement by this reference.

IV. The parties understand and agree that the Gila County Recorder's office is responsible for voter registration, mailing of ballots, signature rosters, registers, 120-day notices, and signature verification of ballots. The Gila County Department of Elections is responsible for Department of Justice preclearance of elections, election equipment, election staffing and training, ballot layout, ballot printing, ballot processing, and ballot tabulation, and reporting. Services will only be provided as agreed to in the Menu to be completed for each election.

V. By signing this agreement the Jurisdiction agrees to indemnify and hold harmless the County from any claims resulting from the County participating in the election and agrees to the terms specified in the agreement

Intergovernmental Agreement for Election Services

Signed this _____ day of _____, 2012

GILA COUNTY BOARD OF SUPERVISORS

_____

Tommie C. Martin
Chairman

WHISPERING PINES DOMESTIC WATER IMPROVEMENT DISTRICT

_____

James Abbott
Chairman

ATTEST

_____

Marian Sheppard
Deputy Clerk of the Board

APPROVED AS TO FORM

_____

Bryan B. Chambers
Chief Deputy County Attorney

GILA COUNTY, ARIZONA

JURISDICTION MENU OF SERVICES

The Jurisdiction is responsible for meeting with BOTH the Gila County Recorder AND the Gila County Department of Elections Director to complete this Menu of Services for each election			
Jurisdiction Name			
Election Title	Election Date		
Last Day to Register	No. Registered Voters		
Primary Contact			
Work Phone	Email		
Cell Phone	Fax		
Home Phone	Alternate No.		
Secondary Contact			
Work Phone	Email		
Cell Phone	Fax		
Home Phone	Alternate No.		
Attorney Contact			
Work Phone	Email		
Cell Phone	Fax		
Home Phone	Alternate No.		
Candidates? (If Yes, complete section below)	Yes	No	
Offices to be Elected:		Number to Elect	
1			
2			
3			
4			
5			
6			
Last Day for Candidate Filing			
Ballot Question? (If Yes, complete section below by identifying type and number of measures)	Yes	No	
Copy of action calling election attached?	Yes	No	
Meeting minutes, resolution, notice of election, etc. If not attached, enter date when information will be sent.	Due Date		

GILA COUNTY, ARIZONA

JURISDICTION MENU OF SERVICES

Logic and Accuracy Tests will be performed by the Gila County Department of Elections at 5515 S Apache Ave, Globe, AZ on (Enter Date)	Date
Ballot layout information including candidate names and ballot question text must be provided to the Gila County Department of Elections by the Jurisdiction no later than 5:00 pm 90 days prior to the election (Enter Date)	Due Date
Gila County Department of Elections shall email "Unofficial Early Results" to the Jurisdiction on election night shortly after 8:00 pm. Ballot Tabulation shall be reported to Jurisdiction by (Enter Date)	Due Date
Storage and Retention. All materials related to the election including signature rosters, voted ballots, official envelopes, early ballots, etc. are the property of the Jurisdiction. County shall return materials via (Select Which Method is Preferred)	Mail Pick-up Delivery

Indicate with an "X" Services to be Performed by the County	**YES**	**NO**	**Resp**	**Cost**
Early Ballot/120-Day Notice Processing per Ballot Mailed Out (includes outgoing postage)			Recorder	$2.50
Early Ballot Signature Verification per Signature			Recorder	$0.50
Provisional and Conditional Ballot Verification per ballot			Recorder	$3.00
Petition Signature Verification per Signature			Recorder	$3.00
Voter Registration or other Voter Lists:			Recorder	
Printed per Name			Recorder	$0.05
Electronic per Name Plus Cost of Media			Recorder	$0.01
CD per CD-Rom			Recorder	$3.00
Mailing Labels per Name			Recorder	$0.10
Registers/Rosters per Name			Recorder	$0.05
Roster Paper			Recorder	$0.20
Registers/Rosters per Set			Recorder	$6.00
US Dept of Justice Pre-Clearance (if Jurisdiction desires the County to create)			Elections	$25.00/hour
Basic Fee for Service per Registered Voter (Special or Not Consolidated)			Elections	$1.50
Basic Fee for Service per Registered Voter (Consolidated Election)			Elections	$0.50
Ballot Question per Question			Elections	$100.00
Sample Ballot Creation			Elections	Actual Cost
Sample Ballot Mailing			Elections	Actual Cost
Ballot Layout and Printing			Elections	Actual Cost
Recruit and Train Election Workers			Elections	$17.00/hour
Accu-Vote Ballot Scanner Price per Unit			Elections	$25.00
Touchscreen Unit Price per Unit			Elections	$25.00
Memory Card Price per Card			Elections	$25.00

GILA COUNTY, ARIZONA

JURISDICTION MENU OF SERVICES

County Personnel Labor Rate			Recorder and Elections	$17.00/hour
County Personnel Overtime Labor Rate			Recorder and Elections	$25.50/hour
Temporary Early Board or Other Worker Rate			Recorder and Elections	Min. Wage (Currently $7.65/hour)
Mileage Reimbursement			Recorder and Elections	County Rate (Currently $0.51/mile)
Postage			Recorder and Elections	Actual Cost
Written Spanish Translation			Recorder and Elections	Actual Cost
Ballot Box (Price per Box)			Recorder and Elections	$25.00
Additional Services (as requested by the Jurisdiction) will be billed at actual cost. Such services may include consulting fees, special reports, computer programming, etc.			Recorder and Elections	Actual Cost
Additional Services Requested (Specify)				
Estimated Cost of Elections				
Gila County Recorder				
Gila County Department of Elections				

Jurisdiction Authorized Signature	
	Date
Gila County Recorder Authorized Signature	
	Date
Gila County Department of Elections Authorized Signature	
	Date

GILA COUNTY ATTORNEY
Daisy Flores

Re: County Attorney's Office approval of IGA pursuant to A.R.S. § 11-952(D).

To whom it may concern:

The County Attorney's Office has reviewed the Intergovernmental Agreement attached to this agenda item and has determined that it is in its "proper form" and "is within the powers and authority granted under the laws of this state to such public agency or public procurement unit" pursuant to A.R.S. § A.R.S. § 11-952(D).

Explanation of the Gila County Attorney's Office Intergovernmental Agreement (IGA) Review

A.R.S. § 11-952(D) requires that

> every agreement or contract involving any public agency or public procurement unit of this state . . . before its execution, shall be submitted to the attorney for each such public agency or public procurement unit, who shall determine whether the agreement is in proper form and is within the powers and authority granted under the laws of this state to such public agency or public procurement unit.

In performing this review, the County Attorney's Office reviews IGAs to see that they are in "proper form" prior to their execution. "Proper form" means that the contract conforms to fundamental contract law, conforms to specific legislative requirements, and is within the powers and authority granted to the public agency. It does not mean that the County Attorney's Office approves of or supports the policy objectives contained in the IGA. That approval is solely the province of the public agency through its elected body.

Likewise, this approval is not a certification that the IGA has been properly executed. Proper execution can only be determined after all the entities entering into the IGA have taken legal action to approve the IGA. There is no statutory requirement for the County Attorney's Office to certify that IGAs are properly executed.

Nonetheless, it is imperative for each public agency to ensure that each IGA is properly executed because A.R.S. § 11-952(F) requires that "[a]ppropriate action … applicable to the governing bodies of the participating agencies approving or extending the duration of the … contract shall be necessary before any such agreement, contract or extension may be filed or become effective." This can be done by ensuring that the governing body gives the public proper notice of the meeting wherein action will be taken to approve the IGA, that the item is adequately described in the agenda accompanying the notice, and that the governing body takes such action. Any questions regarding whether the IGA has been properly executed may be directed to the County Attorney's Office.

Proper execution of IGAs is important because A.R.S. § 11-952(H) provides that "[p]ayment for services under this section shall not be made unless pursuant to a fully approved written contract." Additionally, A.R.S. § 11-952(I) provides that "[a] person who authorizes payment of any monies in violation of this section is liable for the monies paid plus twenty per cent of such amount and legal interest from the date of payment."

The public agency or department submitting the IGA for review has the responsibility to read and understand the IGA in order to completely understand its obligations under the IGA if it is ultimately approved by the public entity's board. This is because while the County Attorney's Office can approve the IGA as to form, the office may not have any idea whether the public agency has the capacity to actually comply with its contractual obligations. Also, the County Attorney's Office does not monitor IGA compliance. Hence the public entity or submitting department will need to be prepared to monitor their own compliance. A thorough knowledge of the provisions of the IGA will be necessary to monitor compliance.

Before determining whether an IGA contract "is in proper form," the County Attorney's Office will answer any questions or concerns the public agency has about the contract. It is the responsibility of the public agency or department submitting the IGA for review to ask any specific questions or address any concerns it has about the IGA to the County Attorney's Office at the same time they submit the IGA for review. Making such an inquiry also helps improve the County Attorney's Office review of the IGA because it will help focus the review on specific issues that are of greatest concern to the public agency. Failing to make such an inquiry when the agency does have issues or concerns will decrease the ability of the County Attorney's Office to meaningfully review the IGA.

ARF-1392 **Consent Agenda Item 4- K**

Regular BOS Meeting

Meeting Date: 08/07/2012

Submitted For: Linda Eastlick, Elections Director

Submitted By: David Rogers, Elections Specialist, Elections Department

Department: Elections Department

Information

Request/Subject

Intergovernmental Agreement for Election Services between Gila County and the Gila County School Superintendent.

Background Information

The Gila County Recorder's Office and Department of Elections perform election services for various governmental agencies and special districts within Gila County.

Changes to County policy with regard to the conduct of jurisdictional elections were adopted by the Board of Supervisors on February 7, 2012. These changes provide for a master intergovernmental agreement to be signed for each participating jurisdiction. Each master agreement will remain in effect unless one of the parties cancels the agreement.

A Menu of Services will be completed for each election. The Menu includes a fee schedule for each type of service requested of the Recorder's Office or Department of Elections.

Evaluation

The Gila County School Superintendent has requested Gila County conduct their governing board member elections.

Conclusion

At this time, the Gila County School Superintendent wishes to enter into a Master Agreement with Gila County for election services.

Recommendation

The Elections Director recommends the Board of Supervisors approve the Intergovernmental Agreement for Election Services between Gila County and the Gila County School Superintendent.

Suggested Motion

Approval of an Intergovernmental Agreement for Election Services between Gila County and the Gila County School Superintendent.

Attachments

IGA with Gila County School Superintendent

Menu of Services

Legal Explanation

GILA COUNTY BOARD OF SUPERVISORS
1400 EAST ASH STREET, GLOBE, AZ 85501

GILA COUNTY RECORDER
1400 EAST ASH STREET, GLOBE, AZ 85501

GILA COUNTY DEPARTMENT OF ELECTIONS
5515 S. APACHE AVENUE, SUITE 900, GLOBE, AZ 85501

INTERGOVERNMENTAL AGREEMENT FOR ELECTION SERVICES

WHEREAS, the County of Gila has a comprehensive voting system and certified Elections Officials; and

WHEREAS, the Gila County School Superintendent seeks Gila County assistance in the conduct of elections; and

WHEREAS, it is good public policy and benefits the citizens of Gila County and is the purpose of this Agreement to make available to any City, Town, School District, or Special Election Jurisdiction within the limits of Gila County the services already in existence;

NOW THEREFORE IT IS AGREED by and between the County of Gila, hereinafter called the "County", through the agency of the Gila County Recorder and the Gila County Department of Elections, and the Gila County School Superintendent hereinafter called the "Jurisdiction," pursuant to ARS §16-172, 16-205 and §11-951 et seq., an agreement follows:

I. <u>The County shall:</u>

   a. Provide the services related to each election which are offered in the current Gila County, Arizona Jurisdiction Menu of Services, hereinafter called the Menu, and which are requested by the Jurisdiction as indicated on the Menu;

b. Make available support services, ballots, voting equipment, vote tallying equipment, precinct supplies, and such other election materials and services as may be required for proper conduct of elections as agreed by the parties;

c. To the extent the County determines it is able, provide personnel necessary to effectively administer an election as agreed by the parties;

d. Furnish election administrative materials, which have been prepared for County elections, to the jurisdiction as agreed by the parties; and

e. Conduct early balloting and election functions at the polls as agreed by the parties.

II. The Jurisdiction shall:

a. Submit to the Recorder's Office and the Department of Elections a completed Menu indicating which election services Jurisdiction is requesting the County to perform for each election. At least 150 calendar days prior to the election;

b. Reimburse the County for costs as noted in the Menu for each election where services are requested by the Jurisdiction. Such costs shall include election materials, postage, supplies and equipment and/or personnel or any other service required in direct support of the Jurisdiction Elections;

c. Notify the County Recorder to arrange verification of signatures on Early Voting Requests and ballots to be verified;

d. Be responsible for the security of all ballots tabulated by officials and vendors other than the County and ensure that election functions performed by the Jurisdiction or its outside vendors comply with applicable law and regulations of the Secretary of State;

e. Comply with County restrictions on use and dissemination of voter information and ensure use of voter registration information for Jurisdiction's election purposes is as authorized by Arizona Revised Statutes, Title 16, Section 168;

f. Provide Gila County with notification of preclearance requests made under Section 5 of the Voting Rights Act or request the County prepare preclearance requests to the Department of Justice for elections as necessary;

g. Provide a list of inactive voters who voted or allow the Gila County Recorder to scan jurisdiction's rosters for inactive voters who voted following a jurisdictional election, for the purpose of re-establishing the inactive voter to active status,

and for updating the County's voter registration files to reflect address and other registration changes requested by voters;

h. Be responsible for the creation, translation, printing and mailing of all publicity pamphlets; and

i. Reimburse the County for any costs associated with damage or repair of election equipment which may occur while such election equipment is in the possession of the Jurisdiction.

III. <u>The County and the Jurisdiction mutually covenant and agree:</u>

a. The Jurisdiction will be responsible for all submissions required under Section 5 of the Voting Rights Act to the Department of Justice;

b. Charges for printing of ballot pages, sample ballots, ballot labels, or any other items commercially produced will be billed directly to the Jurisdiction by the commercial vendor providing such services, unless alternate arrangements are agreed to in a Menu to be completed for each election;

c. Separate invoices may be submitted to the Jurisdiction by the Gila County Recorder's Office and the Gila County Department of Elections;

d. Each party is responsible to finance and maintain a budget for its respective responsibilities and obligations under this agreement;

e. Each party will use its personnel, property, and resources for accomplishing its respective obligations under this agreement;

f. Each party will maintain its respective property after termination of this agreement and will eventually dispose of any elections materials used under this agreement in a manner provided for by state and federal law. In the event conflict arises between the County and Jurisdiction over the use of voting equipment, vote tallying equipment, or County personnel, the County will have priority usage. The County agrees to make every effort to reconcile conflicts and make reasonable provisions with the Jurisdiction so neither party will suffer as a consequence of conflict;

g. This contract will continue in full force and effect from year to year, without renewal, subject to cancellation for the immediate calendar year by either party not later than December 1 of any year;

h. This contract shall become effective from and after the date of its execution by the governing bodies of both the County and the Jurisdiction;

i. In the event of termination, any real or personal property belonging to either party and furnished pursuant to this Agreement shall be returned to the furnishing party; and

j. This Agreement may be canceled pursuant to the provisions of ARS §38-511 which are incorporated into this agreement by this reference.

IV. The parties understand and agree that the Gila County Recorder's office is responsible for voter registration, mailing of ballots, signature rosters, registers, 120-day notices, and signature verification of ballots. The Gila County Department of Elections is responsible for Department of Justice preclearance of elections, election equipment, election staffing and training, ballot layout, ballot printing, ballot processing, and ballot tabulation, and reporting. Services will only be provided as agreed to in the Menu to be completed for each election.

V. By signing this agreement the Jurisdiction agrees to indemnify and hold harmless the County from any claims resulting from the County participating in the election and agrees to the terms specified in the agreement.

VI. Disclosure of Dual Representation: In approving this Intergovernmental Agreement between Gila County and the Superintendent, the Gila County Attorney has represented Gila County and the Superintendent. Arizona Ethical Rule 1.7 requires that certain steps be taken before an attorney can represent one client that is directly adverse to another client or representation of one client may be materially limited by the attorney's responsibilities to another client.

In approving the IGA on behalf of Gila County and the Superintendent, the Gila County Attorney has determined that representation of one client is not directly adverse to the other, nor will representation of one client be materially limited by responsibilities to the other.

However, it is possible in the future that if any dispute arises from this Intergovernmental Agreement and either of the parties thereto are adverse to each other, the Gila County Attorney may have to invoke the requirements of the Arizona Ethical Rule 1.7 as follows:

Ethical Rule 1.7: CONFLICT OF INTEREST: CURRENT CLIENTS:

(a) Except as provided in paragraph (b), a lawyer shall not represent a client if the representation involves a concurrent conflict of interest. A concurrent conflict of interest exists if:

    (1) The representation of one client will be directly adverse to another client; or
    (2) There is a significant risk that the representation of one or more clients will be materially limited by the lawyer's responsibilities to another client, a former client or a third person or by a personal interest of the lawyer.

(b) Notwithstanding the existence of a concurrent conflict of interest under paragraph (a), a lawyer may represent a client if each affected client gives informed consent, confirmed in writing, and:

    (1) The lawyer reasonably believes that the lawyer will be able to provide competent and diligent representation to each affected client:
    (2) The representation is not prohibited by law; and:
    (3) The representation does not involve the assertion of a claim by one client against another client represented by the lawyer in the same litigation or other proceeding before a tribunal.

As a result of Ethical Rule 1.7 the attorney is required to reasonably believe the dual representation will not be adversely affected, and each client must consent in writing after consultation.

Therefore, the undersigned acknowledge this dual representation and acknowledge that if the Rule's conflict of interest occurs, the Gila County Attorney may have to withdraw representation of one or both clients.

Intergovernmental Agreement for Election Services

Signed this _____ day of _____, 2012

GILA COUNTY BOARD OF SUPERVISORS

_____

Tommie C. Martin
Chairman

GILA COUNTY SCHOOL SUPERINTENDENT

Linda L. O'Dell

Linda O'Dell
County School Superintendent

ATTEST

_____

Marian Sheppard
Deputy Clerk of the Board

APPROVED AS TO FORM

_____

Bryan B. Chambers
Chief Deputy County Attorney

APPROVED AS TO FORM

_____

Bryan B. Chambers
Chief Deputy County Attorney

GILA COUNTY, ARIZONA

JURISDICTION MENU OF SERVICES

The Jurisdiction is responsible for meeting with BOTH the Gila County Recorder AND the Gila County Department of Elections Director to complete this Menu of Services for each election			
Jurisdiction Name			
Election Title	Election Date		
Last Day to Register	No. Registered Voters		
Primary Contact			
Work Phone	Email		
Cell Phone	Fax		
Home Phone	Alternate No.		
Secondary Contact			
Work Phone	Email		
Cell Phone	Fax		
Home Phone	Alternate No.		
Attorney Contact			
Work Phone	Email		
Cell Phone	Fax		
Home Phone	Alternate No.		
Candidates? (If Yes, complete section below)	Yes	No	
Offices to be Elected:		Number to Elect	
1			
2			
3			
4			
5			
6			
Last Day for Candidate Filing			
Ballot Question? (If Yes, complete section below by identifying type and number of measures)	Yes	No	
Copy of action calling election attached?	Yes	No	
Meeting minutes, resolution, notice of election, etc. If not attached, enter date when information will be sent.	Due Date		

GILA COUNTY, ARIZONA

JURISDICTION MENU OF SERVICES

Logic and Accuracy Tests will be performed by the Gila County Department of Elections at 5515 S Apache Ave, Globe, AZ on (Enter Date)	Date
Ballot layout information including candidate names and ballot question text must be provided to the Gila County Department of Elections by the Jurisdiction no later than 5:00 pm 90 days prior to the election (Enter Date)	Due Date
Gila County Department of Elections shall email "Unofficial Early Results" to the Jurisdiction on election night shortly after 8:00 pm. Ballot Tabulation shall be reported to Jurisdiction by (Enter Date)	Due Date
Storage and Retention. All materials related to the election including signature rosters, voted ballots, official envelopes, early ballots, etc. are the property of the Jurisdiction. County shall return materials via (Select Which Method is Preferred)	Mail Pick-up Delivery

Indicate with an "X" Services to be Performed by the County	**YES**	**NO**	**Resp**	**Cost**
Early Ballot/120-Day Notice Processing per Ballot Mailed Out (includes outgoing postage)			Recorder	$2.50
Early Ballot Signature Verification per Signature			Recorder	$0.50
Provisional and Conditional Ballot Verification per ballot			Recorder	$3.00
Petition Signature Verification per Signature			Recorder	$3.00
Voter Registration or other Voter Lists:			Recorder	
Printed per Name			Recorder	$0.05
Electronic per Name Plus Cost of Media			Recorder	$0.01
CD per CD-Rom			Recorder	$3.00
Mailing Labels per Name			Recorder	$0.10
Registers/Rosters per Name			Recorder	$0.05
Roster Paper			Recorder	$0.20
Registers/Rosters per Set			Recorder	$6.00
US Dept of Justice Pre-Clearance (if Jurisdiction desires the County to create)			Elections	$25.00/hour
Basic Fee for Service per Registered Voter (Special or Not Consolidated)			Elections	$1.50
Basic Fee for Service per Registered Voter (Consolidated Election)			Elections	$0.50
Ballot Question per Question			Elections	$100.00
Sample Ballot Creation			Elections	Actual Cost
Sample Ballot Mailing			Elections	Actual Cost
Ballot Layout and Printing			Elections	Actual Cost
Recruit and Train Election Workers			Elections	$17.00/hour
Accu-Vote Ballot Scanner Price per Unit			Elections	$25.00
Touchscreen Unit Price per Unit			Elections	$25.00
Memory Card Price per Card			Elections	$25.00

GILA COUNTY, ARIZONA

JURISDICTION MENU OF SERVICES

County Personnel Labor Rate			Recorder and Elections	$17.00/hour
County Personnel Overtime Labor Rate			Recorder and Elections	$25.50/hour
Temporary Early Board or Other Worker Rate			Recorder and Elections	Min. Wage (Currently $7.65/hour)
Mileage Reimbursement			Recorder and Elections	County Rate (Currently $0.51/mile)
Postage			Recorder and Elections	Actual Cost
Written Spanish Translation			Recorder and Elections	Actual Cost
Ballot Box (Price per Box)			Recorder and Elections	$25.00
Additional Services (as requested by the Jurisdiction) will be billed at actual cost. Such services may include consulting fees, special reports, computer programming, etc.			Recorder and Elections	Actual Cost
Additional Services Requested (Specify)				
Estimated Cost of Elections				
Gila County Recorder				
Gila County Department of Elections				

Jurisdiction Authorized Signature	
	Date
Gila County Recorder Authorized Signature	
	Date
Gila County Department of Elections Authorized Signature	
	Date

GILA COUNTY ATTORNEY
Daisy Flores

Re: County Attorney's Office approval of IGA pursuant to A.R.S. § 11-952(D).

To whom it may concern:

The County Attorney's Office has reviewed the Intergovernmental Agreement attached to this agenda item and has determined that it is in its "proper form" and "is within the powers and authority granted under the laws of this state to such public agency or public procurement unit" pursuant to A.R.S. § A.R.S. § 11-952(D).

Explanation of the Gila County Attorney's Office Intergovernmental Agreement (IGA) Review

A.R.S. § 11-952(D) requires that

> every agreement or contract involving any public agency or public procurement unit of this state . . . before its execution, shall be submitted to the attorney for each such public agency or public procurement unit, who shall determine whether the agreement is in proper form and is within the powers and authority granted under the laws of this state to such public agency or public procurement unit.

In performing this review, the County Attorney's Office reviews IGAs to see that they are in "proper form" prior to their execution. "Proper form" means that the contract conforms to fundamental contract law, conforms to specific legislative requirements, and is within the powers and authority granted to the public agency. It does not mean that the County Attorney's Office approves of or supports the policy objectives contained in the IGA. That approval is solely the province of the public agency through its elected body.

Likewise, this approval is not a certification that the IGA has been properly executed. Proper execution can only be determined after all the entities entering into the IGA have taken legal action to approve the IGA. There is no statutory requirement for the County Attorney's Office to certify that IGAs are properly executed.

Nonetheless, it is imperative for each public agency to ensure that each IGA is properly executed because A.R.S. § 11-952(F) requires that "[a]ppropriate action … applicable to the governing bodies of the participating agencies approving or extending the duration of the … contract shall be necessary before any such agreement, contract or extension may be filed or become effective." This can be done by ensuring that the governing body gives the public proper notice of the meeting wherein action will be taken to approve the IGA, that the item is adequately described in the agenda accompanying the notice, and that the governing body takes such action. Any questions regarding whether the IGA has been properly executed may be directed to the County Attorney's Office.

Proper execution of IGAs is important because A.R.S. § 11-952(H) provides that "[p]ayment for services under this section shall not be made unless pursuant to a fully approved written contract." Additionally, A.R.S. § 11-952(I) provides that "[a] person who authorizes payment of any monies in violation of this section is liable for the monies paid plus twenty per cent of such amount and legal interest from the date of payment."

The public agency or department submitting the IGA for review has the responsibility to read and understand the IGA in order to completely understand its obligations under the IGA if it is ultimately approved by the public entity's board. This is because while the County Attorney's Office can approve the IGA as to form, the office may not have any idea whether the public agency has the capacity to actually comply with its contractual obligations. Also, the County Attorney's Office does not monitor IGA compliance. Hence the public entity or submitting department will need to be prepared to monitor their own compliance. A thorough knowledge of the provisions of the IGA will be necessary to monitor compliance.

Before determining whether an IGA contract "is in proper form," the County Attorney's Office will answer any questions or concerns the public agency has about the contract. It is the responsibility of the public agency or department submitting the IGA for review to ask any specific questions or address any concerns it has about the IGA to the County Attorney's Office at the same time they submit the IGA for review. Making such an inquiry also helps improve the County Attorney's Office review of the IGA because it will help focus the review on specific issues that are of greatest concern to the public agency. Failing to make such an inquiry when the agency does have issues or concerns will decrease the ability of the County Attorney's Office to meaningfully review the IGA.

ARF-1389 **Consent Agenda Item 4- L**

Regular BOS Meeting

Meeting Date: 08/07/2012

Submitted For: Linda Eastlick, Elections Director

Submitted By: David Rogers, Elections Specialist, Elections Department

Department: Elections Department

Information

Request/Subject

Intergovernmental Agreement for Election Services between Gila County and Pine-Strawberry Water Improvement District.

Background Information

The Gila County Recorder's Office and Elections Department perform election services for various governmental agencies and special districts within Gila County.

Changes to County policy with regard to the conduct of jurisdictional elections were adopted by the Board of Supervisors on February 7, 2012. These changes provide for a master intergovernmental agreement to be signed for each participating jurisdiction. Each master agreement will remain in effect unless one of the parties cancels the agreement.

A Menu of Services will be completed for each election. The Menu includes a fee schedule for each type of service requested of the Recorder's Office or Elections Department.

Evaluation

The Pine-Strawberry Water Improvement District has requested that Gila County conduct its governing board member elections.

Conclusion

At this time, the Pine-Strawberry Water Improvement District wishes to enter into an Intergovernmental Agreement with Gila County whereby Gila County will provide election services.

Recommendation

It is recommended the Board approve the Intergovernmental Agreement for Election Services between Gila County and the Pine-Strawberry Water Improvement District.

Suggested Motion

Approval of an Intergovernmental Agreement for Election Services between Gila County and the Pine-Strawberry Water Improvement District.

Attachments

IGA with Pine-Strawberry Water Improvement District

Menu of Services

Legal Explanation

GILA COUNTY BOARD OF SUPERVISORS
1400 EAST ASH STREET, GLOBE, AZ 85501

GILA COUNTY RECORDER
1400 EAST ASH STREET, GLOBE, AZ 85501

GILA COUNTY DEPARTMENT OF ELECTIONS
5515 S. APACHE AVENUE, SUITE 900, GLOBE, AZ 85501

INTERGOVERNMENTAL AGREEMENT FOR ELECTION SERVICES

WHEREAS, the County of Gila has a comprehensive voting system and certified Elections Officials; and

WHEREAS, the Pine/Strawberry Water Improvement District seeks Gila County assistance in the conduct of elections; and

WHEREAS, it is good public policy and benefits the citizens of Gila County and is the purpose of this Agreement to make available to any City, Town, School District, or Special Election Jurisdiction within the limits of Gila County the services already in existence;

NOW THEREFORE IT IS AGREED by and between the County of Gila, hereinafter called the "County", through the agency of the Gila County Recorder and the Gila County Department of Elections, and the Pine/Strawberry Water Improvement District hereinafter called the "Jurisdiction," pursuant to ARS §16-172, 16-205 and §11-951 et seq., an agreement follows:

I. <u>The County shall:</u>

a. Provide the services related to each election which are offered in the current Gila County, Arizona Jurisdiction Menu of Services, hereinafter called the Menu, and which are requested by the Jurisdiction as indicated on the Menu;

b. Make available support services, ballots, voting equipment, vote tallying equipment, precinct supplies, and such other election materials and services as may be required for proper conduct of elections as agreed by the parties;

c. To the extent the County determines it is able, provide personnel necessary to effectively administer an election as agreed by the parties;

d. Furnish election administrative materials, which have been prepared for County elections, to the jurisdiction as agreed by the parties;

e. Conduct early balloting and election functions at the polls as agreed by the parties.

II. The Jurisdiction shall:

a. Submit to the Recorder's Office and the Department of Elections a completed Menu indicating which election services Jurisdiction is requesting the County to perform for each election. At least 150 calendar days prior to the election;

b. Reimburse the County for costs as noted in the Menu for each election where services are requested by the Jurisdiction. Such costs shall include election materials, postage, supplies and equipment and/or personnel or any other service required in direct support of the Jurisdiction Elections;

c. Notify the County Recorder to arrange verification of signatures on Early Voting Requests and ballots to be verified;

d. Be responsible for the security of all ballots tabulated by officials and vendors other than the County and ensure that election functions performed by the Jurisdiction or its outside vendors comply with applicable law and regulations of the Secretary of State;

e. Comply with County restrictions on use and dissemination of voter information and ensure use of voter registration information for Jurisdiction's election purposes is as authorized by Arizona Revised Statutes, Title 16, Section 168;

f. Provide Gila County with notification of preclearance requests made under Section 5 of the Voting Rights Act or request the County prepare preclearance requests to the Department of Justice for elections as necessary;

g. Provide a list of inactive voters who voted or allow the Gila County Recorder to scan jurisdiction's rosters for inactive voters who voted following a jurisdictional election, for the purpose of re-establishing the inactive voter to active status,

and for updating the County's voter registration files to reflect address and other registration changes requested by voters;

h. Be responsible for the creation, translation, printing and mailing of all publicity pamphlets;

i. Reimburse the County for any costs associated with damage or repair of election equipment which may occur while such election equipment is in the possession of the Jurisdiction.

III. <u>The County and the Jurisdiction mutually covenant and agree:</u>

a. The Jurisdiction will be responsible for all submissions required under Section 5 of the Voting Rights Act to the Department of Justice;

b. Charges for printing of ballot pages, sample ballots, ballot labels, or any other items commercially produced will be billed directly to the Jurisdiction by the commercial vendor providing such services, unless alternate arrangements are agreed to in a Menu to be completed for each election;

c. Separate invoices may be submitted to the Jurisdiction by the Gila County Recorder's Office and the Gila County Department of Elections;

d. Each party is responsible to finance and maintain a budget for its respective responsibilities and obligations under this agreement;

e. Each party will use its personnel, property, and resources for accomplishing its respective obligations under this agreement;

f. Each party will maintain its respective property after termination of this agreement and will eventually dispose of any elections materials used under this agreement in a manner provided for by state and federal law. In the event conflict arises between the County and Jurisdiction over the use of voting equipment, vote tallying equipment, or County personnel, the County will have priority usage. The County agrees to make every effort to reconcile conflicts and make reasonable provisions with the Jurisdiction so neither party will suffer as a consequence of conflict;

g. This contract will continue in full force and effect from year to year, without renewal, subject to cancellation for the immediate calendar year by either party not later than December 1 of any year;

h. This contract shall become effective from and after the date of its execution by the governing bodies of both the County and the Jurisdiction;

i. In the event of termination, any real or personal property belonging to either party and furnished pursuant to this Agreement shall be returned to the furnishing party;

j. This Agreement may be canceled pursuant to the provisions of ARS §38-511 which are incorporated into this agreement by this reference.

IV. The parties understand and agree that the Gila County Recorder's office is responsible for voter registration, mailing of ballots, signature rosters, registers, 120-day notices, and signature verification of ballots. The Gila County Department of Elections is responsible for Department of Justice preclearance of elections, election equipment, election staffing and training, ballot layout, ballot printing, ballot processing, and ballot tabulation, and reporting. Services will only be provided as agreed to in the Menu to be completed for each election.

V. By signing this agreement the Jurisdiction agrees to indemnify and hold harmless the County from any claims resulting from the County participating in the election and agrees to the terms specified in the agreement

Intergovernmental Agreement for Election Services

Signed this _____ day of _____, 2012

GILA COUNTY BOARD OF SUPERVISORS

_____

Tommie C. Martin
Chairman

PINE/STRAWBERRY WATER IMPROVEMENT DISTRICT

_____

Gary Lovetro
Chairman

ATTEST

_____

Marian Sheppard
Deputy Clerk of the Board

APPROVED AS TO FORM

_____

(Name of Attorney For the Jurisdiction)

APPROVED AS TO FORM

_____

Bryan B. Chambers
Chief Deputy County Attorney

GILA COUNTY, ARIZONA

JURISDICTION MENU OF SERVICES

The Jurisdiction is responsible for meeting with BOTH the Gila County Recorder AND the Gila County Department of Elections Director to complete this Menu of Services for each election			
Jurisdiction Name			
Election Title	Election Date		
Last Day to Register	No. Registered Voters		
Primary Contact			
Work Phone	Email		
Cell Phone	Fax		
Home Phone	Alternate No.		
Secondary Contact			
Work Phone	Email		
Cell Phone	Fax		
Home Phone	Alternate No.		
Attorney Contact			
Work Phone	Email		
Cell Phone	Fax		
Home Phone	Alternate No.		
Candidates? (If Yes, complete section below)	Yes	No	
Offices to be Elected:		Number to Elect	
1			
2			
3			
4			
5			
6			
Last Day for Candidate Filing			
Ballot Question? (If Yes, complete section below by identifying type and number of measures)	Yes	No	
Copy of action calling election attached?	Yes	No	
Meeting minutes, resolution, notice of election, etc. If not attached, enter date when information will be sent.	Due Date		

GILA COUNTY, ARIZONA

JURISDICTION MENU OF SERVICES

Logic and Accuracy Tests will be performed by the Gila County Department of Elections at 5515 S Apache Ave, Globe, AZ on (Enter Date)	Date
Ballot layout information including candidate names and ballot question text must be provided to the Gila County Department of Elections by the Jurisdiction no later than 5:00 pm 90 days prior to the election (Enter Date)	Due Date
Gila County Department of Elections shall email "Unofficial Early Results" to the Jurisdiction on election night shortly after 8:00 pm. Ballot Tabulation shall be reported to Jurisdiction by (Enter Date)	Due Date
Storage and Retention. All materials related to the election including signature rosters, voted ballots, official envelopes, early ballots, etc. are the property of the Jurisdiction. County shall return materials via (Select Which Method is Preferred)	Mail Pick-up Delivery

Indicate with an "X" Services to be Performed by the County	**YES**	**NO**	**Resp**	**Cost**
Early Ballot/120-Day Notice Processing per Ballot Mailed Out (includes outgoing postage)			Recorder	$2.50
Early Ballot Signature Verification per Signature			Recorder	$0.50
Provisional and Conditional Ballot Verification per ballot			Recorder	$3.00
Petition Signature Verification per Signature			Recorder	$3.00
Voter Registration or other Voter Lists:			Recorder	
Printed per Name			Recorder	$0.05
Electronic per Name Plus Cost of Media			Recorder	$0.01
CD per CD-Rom			Recorder	$3.00
Mailing Labels per Name			Recorder	$0.10
Registers/Rosters per Name			Recorder	$0.05
Roster Paper			Recorder	$0.20
Registers/Rosters per Set			Recorder	$6.00
US Dept of Justice Pre-Clearance (if Jurisdiction desires the County to create)			Elections	$25.00/hour
Basic Fee for Service per Registered Voter (Special or Not Consolidated)			Elections	$1.50
Basic Fee for Service per Registered Voter (Consolidated Election)			Elections	$0.50
Ballot Question per Question			Elections	$100.00
Sample Ballot Creation			Elections	Actual Cost
Sample Ballot Mailing			Elections	Actual Cost
Ballot Layout and Printing			Elections	Actual Cost
Recruit and Train Election Workers			Elections	$17.00/hour
Accu-Vote Ballot Scanner Price per Unit			Elections	$25.00
Touchscreen Unit Price per Unit			Elections	$25.00
Memory Card Price per Card			Elections	$25.00

GILA COUNTY, ARIZONA

JURISDICTION MENU OF SERVICES

County Personnel Labor Rate			Recorder and Elections	$17.00/hour
County Personnel Overtime Labor Rate			Recorder and Elections	$25.50/hour
Temporary Early Board or Other Worker Rate			Recorder and Elections	Min. Wage (Currently $7.65/hour)
Mileage Reimbursement			Recorder and Elections	County Rate (Currently $0.51/mile)
Postage			Recorder and Elections	Actual Cost
Written Spanish Translation			Recorder and Elections	Actual Cost
Ballot Box (Price per Box)			Recorder and Elections	$25.00
Additional Services (as requested by the Jurisdiction) will be billed at actual cost. Such services may include consulting fees, special reports, computer programming, etc.			Recorder and Elections	Actual Cost
Additional Services Requested (Specify)				
Estimated Cost of Elections				
Gila County Recorder				
Gila County Department of Elections				

Jurisdiction Authorized Signature	
	Date
Gila County Recorder Authorized Signature	
	Date
Gila County Department of Elections Authorized Signature	
	Date

GILA COUNTY ATTORNEY
Daisy Flores

Re: County Attorney's Office approval of IGA pursuant to A.R.S. § 11-952(D).

To whom it may concern:

The County Attorney's Office has reviewed the Intergovernmental Agreement attached to this agenda item and has determined that it is in its "proper form" and "is within the powers and authority granted under the laws of this state to such public agency or public procurement unit" pursuant to A.R.S. § A.R.S. § 11-952(D).

Explanation of the Gila County Attorney's Office Intergovernmental Agreement (IGA) Review

A.R.S. § 11-952(D) requires that

> every agreement or contract involving any public agency or public procurement unit of this state . . . before its execution, shall be submitted to the attorney for each such public agency or public procurement unit, who shall determine whether the agreement is in proper form and is within the powers and authority granted under the laws of this state to such public agency or public procurement unit.

In performing this review, the County Attorney's Office reviews IGAs to see that they are in "proper form" prior to their execution. "Proper form" means that the contract conforms to fundamental contract law, conforms to specific legislative requirements, and is within the powers and authority granted to the public agency. It does not mean that the County Attorney's Office approves of or supports the policy objectives contained in the IGA. That approval is solely the province of the public agency through its elected body.

Likewise, this approval is not a certification that the IGA has been properly executed. Proper execution can only be determined after all the entities entering into the IGA have taken legal action to approve the IGA. There is no statutory requirement for the County Attorney's Office to certify that IGAs are properly executed.

Nonetheless, it is imperative for each public agency to ensure that each IGA is properly executed because A.R.S. § 11-952(F) requires that "[a]ppropriate action … applicable to the governing bodies of the participating agencies approving or extending the duration of the … contract shall be necessary before any such agreement, contract or extension may be filed or become effective." This can be done by ensuring that the governing body gives the public proper notice of the meeting wherein action will be taken to approve the IGA, that the item is adequately described in the agenda accompanying the notice, and that the governing body takes such action. Any questions regarding whether the IGA has been properly executed may be directed to the County Attorney's Office.

Proper execution of IGAs is important because A.R.S. § 11-952(H) provides that "[p]ayment for services under this section shall not be made unless pursuant to a fully approved written contract." Additionally, A.R.S. § 11-952(I) provides that "[a] person who authorizes payment of any monies in violation of this section is liable for the monies paid plus twenty per cent of such amount and legal interest from the date of payment."

The public agency or department submitting the IGA for review has the responsibility to read and understand the IGA in order to completely understand its obligations under the IGA if it is ultimately approved by the public entity's board. This is because while the County Attorney's Office can approve the IGA as to form, the office may not have any idea whether the public agency has the capacity to actually comply with its contractual obligations. Also, the County Attorney's Office does not monitor IGA compliance. Hence the public entity or submitting department will need to be prepared to monitor their own compliance. A thorough knowledge of the provisions of the IGA will be necessary to monitor compliance.

Before determining whether an IGA contract "is in proper form," the County Attorney's Office will answer any questions or concerns the public agency has about the contract. It is the responsibility of the public agency or department submitting the IGA for review to ask any specific questions or address any concerns it has about the IGA to the County Attorney's Office at the same time they submit the IGA for review. Making such an inquiry also helps improve the County Attorney's Office review of the IGA because it will help focus the review on specific issues that are of greatest concern to the public agency. Failing to make such an inquiry when the agency does have issues or concerns will decrease the ability of the County Attorney's Office to meaningfully review the IGA.

ARF-1378 **Consent Agenda Item 4- M**

Regular BOS Meeting

Meeting Date: 08/07/2012

Submitted For: Linda Eastlick, Elections Director

Submitted By: Liz Mata, Administrative Clerk, Elections Department

Department: Elections Department

Information

Request/Subject

Beaver Valley Fire District Governing Board appointment.

Background Information

ARS 48-803 (B) provides that if a vacancy occurs on the district board other than from expiration of a term, the remaining board members shall fill the vacancy by appoinment of an interim member.

Evaluation

At the Beaver Valley Fire District Governing Board meeting of April 14. 2012, the Governing Board moved to appoint Ms. Pat Walker to fill the vacancy created by the passing of member Joyce Lynch. Appointed member Ms. Pat Walker will complete the term which expires November 30, 2014.

Conclusion

Ms. Pat Walker has agreed to serve out the term of deceased member Joyce Lynch.

Recommendation

The Elections Director recommends the Board of Supervisors acknowledge the appointment of Ms. Pat Walker to the Beaver Valley Fire District Governing Board due to the passing of member Joyce Lunch.

Suggested Motion

Acknowledgment of the Beaver Valley Fire District Governing Board's appointment of Ms. Pat Walker to fill the board vacancy created by the passing of member Joyce Lynch. Ms. Pat Walker will complete the term that expires November 30, 2014.

Attachments

ARS 48-803

Beaver Valley FD mtg minutes-Oath

48-803. District administered by a district board

A. In a district that the board of supervisors estimates has a population of fewer than four thousand inhabitants, the district board may consist of three or five members. In a district that the board of supervisors estimates has a population of four thousand or more inhabitants, the district board shall consist of five members, and for a noncontiguous county island fire district formed pursuant to section 48-851, the board shall consist of five members. The estimate of population by the board of supervisors is conclusive and shall be based on available census information, school attendance statistics, election or voter registration statistics, estimates provided by state agencies or the county assessor, or other information as deemed appropriate by the board of supervisors. If the board of supervisors determines, at any time prior to one hundred twenty days before the next regular scheduled election for members of a district board, that the population of a fire district administered by a district board consisting of three members exceeds four thousand inhabitants, estimated as provided in this section, the board of supervisors shall order an increase in the number of members of the district board. If the board of supervisors determines at any time prior to one hundred eighty days before the next regularly scheduled election for members of a district board that the population of a fire district administered by a district board that consists of five members exceeds fifty thousand inhabitants as prescribed in this section, the board of supervisors shall inform the district board that it may expand to seven members. Any expansion to seven members shall occur by majority vote of the district board. The increase is effective for the election of the additional members at the next regular election of members of the district board.

B. If a vacancy occurs on the district board other than from expiration of a term, the remaining board members shall fill the vacancy by appointment of an interim member. If the entire board resigns or for any reason cannot fulfill its duties, the board of supervisors shall appoint an administrator to administer the district with the same duties and obligations of the elected board. If the board of supervisors fails to appoint an administrator within thirty days, a special election shall be held to fill the vacancies on the fire district board.

C. Members of the district board shall serve without compensation, but may be reimbursed for actual expenses incurred in performing duties required by law.

D. The board of a fire district shall appoint or hire a fire chief.

E. The district board shall elect from its members a chairman and a clerk.

F. Of the members first elected to district boards consisting of three members, the two people receiving the first and second highest number of votes shall be elected to four-year terms, and the person receiving the third highest number of votes shall be elected to a two-year term. Of the members first elected to district boards consisting of five members, the three people receiving the first, second and third highest number of votes shall be elected to four-year terms, and the two people receiving the fourth and fifth highest number of votes shall be elected to two-year terms. Thereafter, the term of office of each district board member shall be four years from the first day of the month next following such member's election. Of the members elected as additional members to a five member district board, the person with the highest number of votes is elected to a four-year term and the person with the second highest number of votes is elected to a two-year term. If a district resolves to increase the governing board to seven members pursuant to subsection A, the governing board may appoint two additional members to serve until the next general election. After the general election at which the two additional members are elected, the newly elected member with the highest number of votes serves a four-year term and the other member serves a two-year term. Thereafter, the term of office for these two new members is four years.

Beaver Valley Fire

911 West Beaver Flat Rd
Payson, Arizona 85541
Office 928-472-4711 Fax 928-468-1260
Email beavervalleyfd@hotmail.com

Gila County Department of Elections
ATT: Liz Mata
5515 S. Apache Ave, Suite 900
Globe, AZ 85501

Liz,

Attached is the paperwork for our newest board member, Patricia Walker, who filled the seat vacated by Joyce Lynch upon her death. I have included a copy of the signed minutes of the meeting where she was appointed as well as a copy of the Certificate of Appointment as well as the signed and notarized Loyalty Oath of Office. If anything else is needed, please let me know.

Sincerely,

Becky Friend
Beaver Valley Fire District
Administrative Assistant

Certificate of Appointment

I, Keith E. Friend, (title) Chairman of the Board of the Beaver Valley Fire District, County of Gila, State of Arizona, do hereby certify that at the Regular Meeting held on the 14th day of April, 2012,

PATRICIA WALKER

was duly appointed as a member of the Board of Directors of the Beaver Valley Fire District in and for said County and State, as appears in the official meeting minutes of the Beaver Valley Fire District Board of Directors and on file in my office.

IN WITNESS WHEREOF, I have hereunto set my hand (and affixed the official Seal of the said Board of Directors (if you have one)) on this 14th day of April, 2012.

Keith E. Friend, Chairman of the Board
Beaver Valley Fire District

Term ends. 2014

When recorded deliver to
Gila County Board of Supervisors
Attention: Linda Eastlick, Elections Director

LOYALTY OATH OF OFFICE

STATE OF ARIZONA)
: ss.
COUNTY OF GILA)

I, hereby do solemnly swear that I, Patricia Walker, will support the Constitution of the United States and the Constitution and Laws of the State of Arizona; that I will bear true faith and allegiance to the same and defend them against all enemies whatsoever, foreign and domestic, and that I will faithfully and impartially discharge the duties of governing board member of the Beaver Valley Fire District, county of Gila, state of Arizona, so help me God.

Patricia Walker
Signature

Subscribed and sworn to before me this 11th day of May, 2012.

Notary Public

My Commission Expires:
2-24-15

OFFICIAL SEAL
BRAD NEWELL
NOTARY PUBLIC - State of Arizona
GILA COUNTY
My Comm. Expires Feb. 24, 2015

BEAVER VALLEY FIRE DISTRICT
BOARD OF DIRECTORS REGULAR MEETING
ON APRIL 14, 2012
FINAL

1. CALL TO ORDER: Meeting was called to order at 9:02 a.m.
2. ROLL CALL OF FIRE BOARD MEMBERS: Chairman Keith Friend, Treasurer Ned Jolly and Clerk Dick Harpster. Absent was Lee Wright.
NON-BOARD MEMBERS: Michael Williamson, Fire Chief; Becky Friend, Administrative Assistant; Pat Walker and Leroy Smith.
3. CHAIRMAN COMMENTS: Chairman Friend drew the boards attention to item 8 B and asked them to consider the proposal and formulate questions on the subject, as all had seen the agenda item when posted some days ago.
4. APPROVAL OF MINUTES:
A. The board reviewed the 03/10/2012 minutes. D. Harpster made a motion to accept the minutes as written, N. Jolly seconded the motion and the vote was unanimous, minutes were approved as written.
5. SCHEDULED PUBLIC APPEARANCES: None.
6. UNSCHEDULED PUBLIC APPEARANCES:
A. CALL TO THE PUBLIC: Leroy Smith requested to address the board to inquire what the rules were for using his fire pit. Chief Williamson advised him that so long as there were no Forestry restrictions in place he did not need a permit each time he wished to use his fire pit. Chief Williamson did stress any burning of brush required a permit each time.
7. REPORTS AND CORRESPONDENCE:
A. FIRE CHIEF REPORT: This month's Fire Chief Report was presented to the board by Chief Williamson and is on file at the BVFD administrative office for review and copying as requested.
B. MARCH FINANCIAL REPORTS APPROVAL: Financial reports were reviewed by the board and discussed. Questions were answered by Becky Friend to the board's satisfaction. D. Harpster motioned to accept the bank reconciliation reports and financial report for 03/31/2012, N. Jolly seconded the motion and the vote was unanimous.
8. DISCUSSIONS AND POSSIBLE ACTION CALENDAR:
A. PROVIDENT LIABILITY INSURANCE RENEWAL: K. Friend advised the board the Provident policy was due for renewal and needed to be voted on at this meeting. B. Friend advised the board of the new premium amount and that this rate would be locked in for 3 years if approved. D. Harpster made a motion to accept the 3-year insurance renewal through Mahoney Group and Provident at a 0.5% increase in cost, N. Jolly seconded the motion and after discussion the vote was unanimous.
B. CAPITAL EXPENDITURE FOR PAYING OFF LEASE ON ENGINE AND BUILDING: Chief Williamson addressed the board regarding paying off the BVFD debt on the building and engine. He advised the board that this would free up approximately $16,000 per year in the budget, thus enabling the district to keep a tax increase to a minimum. This could be done with capital reserve and leave over $50,000 for emergency purposes and to cover costs for the district before taxes are received in the next fiscal year. Discussion was held. N. Jolly made a motion to pay off the loan on the engine and the loan on the building with capital reserve by reason of saving money on interest, as long as the County and banking system have no objections to this. D. Harpster seconded the motion and the vote was unanimous. The board requested B. Friend to check with the County to make sure this would be proper.
C. BUDGET 2012/2013 DRAFT AND POSSIBLE FIRE DISTRICT TAX RATE INCREASE: Chief Williamson presented the board with the 2012/2013 budget draft for Beaver Valley Fire District. This draft was based on a 2.75% tax rate and took into account paying off the engine and the building. Much discussion was held regarding the substantial reduction in tax income over the past couple years and the tax income needed to provide the service that is expected of the fire district. After discussion D. Harpster made a motion to accept the 2012/2013 budget draft as presented, N. Jolly seconded the motion and the vote was unanimous. The draft will be published as required by law.
D. BOARD REPLACEMENT, NAMES TO BE CONSIDERED AND POSSIBLY VOTED ON: K. Friend welcomed Pat Walker to the meeting. She was invited to give the board some background on herself, which she did. The board members discussed with Ms. Walker what the board does, what the board is responsible for, etc. Ms. Walker advised the board she would like to fill the seat left vacant due to the passing of Joyce Lynch. After discussion, D. Harpster made a motion to appoint Pat Walker to the position of board member for Beaver Valley Fire District, N. Jolly seconded the motion and the vote was unanimous.
E. 2011 GOVERNMENT UNITS SURVEY CENSUS: B. Friend advised the board the district was required to complete the stated census. The census was completed on line with the assistance of Chief Williamson and K. Friend and submitted. A copy of the census is on file in the office. No action was required on this. This was presented as information to the board only.
9. BOARD MEMBER COMMENTS: D. Harpster inquired as to the status of the old engine. Chief Williamson advised it is still in the possession of the fire district. Discussion was held regarding the need to find a new home for the engine. There was inquiry as to the status of the generator. Chief Williamson advised an electrician is needed to finish the installation, which will be costly. After discussion it was agreed of the need to move forward with completing the installation of the generator.
A. BUSINESS FOR NEXT MEETING: Grant Committee.
10. ADJOURNMENT: The meeting was adjourned by Keith Friend at 10:10 a.m. Next scheduled meeting is **MAY 12, 2012** at 9 a.m.

5-12-12 Jack Ned Jolly 5/12/12
Pat Walker 5/12/12

Prepared by: Becky Friend 04/16/2012

ARF-1384 **Consent Agenda Item 4- N**

Regular BOS Meeting

Meeting Date: 08/07/2012

Submitted For: Linda Eastlick, Elections Director

Submitted By: Liz Mata, Administrative Clerk, Elections Department

Department: Elections Department

Information

Request/Subject

Northern Gila County Sanitary District Governing Board resignation and appointment.

Background Information

ARS 48-803 (B) provides that if a vacancy occurs on the district board other than from expiration of a term, the remaining board members shall fill the vacancy by appointment of an interim member.

Evaluation

At the Northern Gila County Sanitary District Governing Board meeting of January 12, 2012, the resignation of Robert O' Brien was accepted. During the Northern Gila County Sanitary District Governing Board meeting of May 10, 2012, Bill Easton was appointed to fill the vacant term which ends November 30, 2014.

Conclusion

Mr. Easton agreed to serve out the term of Mr. O'Brien.

Recommendation

The Elections Director recommends that the Board of Supervisors acknowledge the resignation of Northern Gila County Sanitary District Board member Robert O'Brien and the appointment of Bill Easton to complete the term of Robert O'Brien which ends November 30, 2014.

Suggested Motion

Acknowledgment of the resignation of Mr. Robert O'Brien from the Northern Gila County Sanitary District Governing Board and the appointment of Mr. Bill Easton to complete the term of Mr. O'Brien, which expires November 30, 2014.

Attachments

ARS 48-803

Northern Gila County SD Mtg Minutes-Oath

48-803. District administered by a district board

A. In a district that the board of supervisors estimates has a population of fewer than four thousand inhabitants, the district board may consist of three or five members. In a district that the board of supervisors estimates has a population of four thousand or more inhabitants, the district board shall consist of five members, and for a noncontiguous county island fire district formed pursuant to section 48-851, the board shall consist of five members. The estimate of population by the board of supervisors is conclusive and shall be based on available census information, school attendance statistics, election or voter registration statistics, estimates provided by state agencies or the county assessor, or other information as deemed appropriate by the board of supervisors. If the board of supervisors determines, at any time prior to one hundred twenty days before the next regular scheduled election for members of a district board, that the population of a fire district administered by a district board consisting of three members exceeds four thousand inhabitants, estimated as provided in this section, the board of supervisors shall order an increase in the number of members of the district board. If the board of supervisors determines at any time prior to one hundred eighty days before the next regularly scheduled election for members of a district board that the population of a fire district administered by a district board that consists of five members exceeds fifty thousand inhabitants as prescribed in this section, the board of supervisors shall inform the district board that it may expand to seven members. Any expansion to seven members shall occur by majority vote of the district board. The increase is effective for the election of the additional members at the next regular election of members of the district board.

B. If a vacancy occurs on the district board other than from expiration of a term, the remaining board members shall fill the vacancy by appointment of an interim member. If the entire board resigns or for any reason cannot fulfill its duties, the board of supervisors shall appoint an administrator to administer the district with the same duties and obligations of the elected board. If the board of supervisors fails to appoint an administrator within thirty days, a special election shall be held to fill the vacancies on the fire district board.

C. Members of the district board shall serve without compensation, but may be reimbursed for actual expenses incurred in performing duties required by law.

D. The board of a fire district shall appoint or hire a fire chief.

E. The district board shall elect from its members a chairman and a clerk.

F. Of the members first elected to district boards consisting of three members, the two people receiving the first and second highest number of votes shall be elected to four-year terms, and the person receiving the third highest number of votes shall be elected to a two-year term. Of the members first elected to district boards consisting of five members, the three people receiving the first, second and third highest number of votes shall be elected to four-year terms, and the two people receiving the fourth and fifth highest number of votes shall be elected to two-year terms. Thereafter, the term of office of each district board member shall be four years from the first day of the month next following such member's election. Of the members elected as additional members to a five member district board, the person with the highest number of votes is elected to a four-year term and the person with the second highest number of votes is elected to a two-year term. If a district resolves to increase the governing board to seven members pursuant to subsection A, the governing board may appoint two additional members to serve until the next general election. After the general election at which the two additional members are elected, the newly elected member with the highest number of votes serves a four-year term and the other member serves a two-year term. Thereafter, the term of office for these two new members is four years.

MINUTES OF THE NORTHERN GILA COUNTY SANITARY DISTRICT BOARD OF DIRECTORS, MEETING HELD ON THURSDAY JANUARY 12, 2012.

INVOCATION
Robert Sanders gave the Invocation.

PLEDGE OF ALLEGIANCE
Bob O'Brien led those present in the Pledge of Allegiance.

MEETING TIME AND PLACE
Robert Sanders called the meeting to order at 12:16 P.M. in the District Conference Room.

MEMBERS PRESENT AT MEETING
The following members were present for the meeting: Bob O'Brien, Robert Sanders, Guy Pfister, and Patrick Underwood.

MEMBERS ABSENT
LaRon Garrett

OTHERS PRESENT AT MEETING
Don Davis of Chaparral Pines, Attorney Mike Harper, Garrett Goldman-Tetra Tech, Inc., Gary Iles, Joel Goode, and Deniese Morgan

CALL TO PUBLIC
Chairman Sanders asked if anyone present wanted to speak about anything not on the agenda. He explained the topic or issue would not be addressed by the Board today, but could be put on the Agenda for the next meeting. There was none.

PREVIOUS MINUTES
Guy Pfister moved to approve the Regular Meeting Minutes of December 8, 2011, Bob O'Brien seconded and the motion carried 4-0.

APPROVE CHECKS
Guy Pfister moved to approve the Check Register for invoices paid from December 8, 2011 through January 12, 2012. Patrick Underwood seconded and the motion carried 4-0 after explanation of the following items: Check 35196 to Xenco Labs for $378 for stream samples, Joel stated this is required testing as part of our permit if Nitrogen or Phosphorus exceeds a set threshold. Rob asked why the excess, Joel said sometimes this happens during the winter. Guy asked where we collect the stream samples. Joel said there a total of six different locations on the American Gulch and East Verde. Check 35202 for $41,760 to CityWide Contracting, Joel stated this is the first progress payment. Check 35210 for $7,680.40 to Lowery's Window, Joel stated this for the two front doors. Check 35224 to Hennessy Equipment for $191.28, Joel stated this is for lift station equipment. Check 35239 to Idexx Labs for $1,431.98, Joel said these are supplies for required testing. Patrick asked how long these supplies last. Joel stated the lab buys in quantity to receive discounts. Check 35244 to Gary Abramson for $168.64 and Check 35245 to Ruth Abramson for $204.90. Joel explained this is a reoccurring monthly payment as part of insurance. He added the District previously paid full Insurance Premiums, and now we pay the Medicare supplement. Rob asked if there were any further questions on the check register, there were none.

PLANT UPGRADES / HEADWORKS PROJECT UPDATE
Gary explained the Contractor is on-site and is expected to pour concrete next week, he added the grease and grit interceptor has been installed. Rob asked if the interceptor is fiberglass, Gary stated it is made of concrete.

Joel added Terry will be here next week to meet with the Contractor and go over some of the Districts' concerns. He added there have been some complications with the contractor, and we would like to resolve some issues.

OPERATIONS REPORT

Gary Iles presented the December-2011 Operations Report. He reported the monthly flow as 43.055 MG and 198.76 tons of Biosolids were hauled to Waste Management for disposal. Gary said the total reuse for the month was 11.165 MG and 11.109MG was pumped to Chaparral Pines, he added we have been cleaning out the High School tank, and we were unable to pump there.

Gary stated the Lab performed 421 tests; the Line Crew performed 46 blue stakes, televised 1000 LF of line, hydro-cleaned 7300 LF of pipe, completed 3 service inspections and pumped 3 septic tanks. All inspections and tanks were in the Airline/Luke project. Gary stated the Maintenance Department completed 34 work orders with 5 pending. Rob Sanders asked if there were any questions on the Operations Report, there were none.

Joel explained there are a couple of reasons Green Valley Lake is down, and will be down for the next few days. He stated a few days before Christmas the plant had an electrical fire in the blower room which caused severe damage, and the plant was out of operation for approximately eight hours. It was caused when a blower was routinely started up. While the plant was down, there was no air going into the aeration basins, and it being wintertime, the bugs do not recover very quickly. Turbidity is a requirement for pumping to the lake; however, it is not a requirement to discharge down the gulch. Joel added turbidity cannot exceed 5 on a daily reading or 2 for an average; we were between 2 and 4. Therefore we shut water off to the lake, as to not violate our permit.

Joel added, as the plant was recovering from this incident, a commercial user in the industrial area, Pulse Combustion discharged excessive amounts of cleaning agents which caused foam and discoloration to the water. Joel stated we did speak with them about discharging; however in the mean time the bugs were affected. He added the turbidity has been ongoing for almost a week and a half. Joel stated, the plant is still recovering, so to help speed up the process we imported bugs from the Reservation, he added this is a common practice. Joel said these are the reasons why the lake is down, and within a week it should be back to normal.

Joel explained we have been cleaning the High School tank, and we took out quite a bit more than last time we cleaned it. He added we use it as storage for Chaparral Pines, and while the plant is down we are unable to pump to the tank. He stated we finished cleaning it out yesterday, and disposed of the solids at the drying beds.

Joel stated Gary has been working on a Capital Item approved within the budget, which is a second generator that will provide emergency power to the Biosolids, Lab and Admin Buildings. We have issued a Purchase Order to Empire, which is pending review and approval of shop drawings. Joel added we are required to have a building permit, and in order to obtain the permit we need engineered drawings, Civil for the pad, and Electrical for the hookup. We have given Terry Moore-Civil Engineer a contract; he will work with Chuck Avery-Electrical Engineer to provide the required drawings. Joel added we obtained Federal Government buying power, and saved almost $34,000, this will allow us to complete the project well within budget.

ADMINISTRATION

Joel explained he wanted to bring the Board up to date concerning discussions with the Town of Payson, regarding discharge from Houston Mesa Water Production Facility. In December, at the Town's request we had a meeting with their water treatment plant engineers, Buzz, LaRon and employees of the Water Department. Joel stated they are at a point in their planning where they know the location and estimated flows, and what their estimated discharge requirements will be.

Joel stated the Town proposed the question, could the Sanitary District accept their discharge. He added they have given the District preliminary numbers based on estimates of solids and chemical makeup. Joel stated the first question is does the District have the capacity within the collection system to accept the discharge, as Houston Mesa is not a conventional gravity sewer system, it is a low pressure, small diameter system, designed only for the subdivision. Joel stated we would need to determine whether the line could handle the flow, then look at the gravity line going from Home Depot all the way to the plant, and finally look at the plant to determine what capacity requirement is needed here. Joel said we have asked Garrett to do some very basic preliminary work, to determine if we have the capacity. At that time, we can meet with the Town and further discuss options of yes we have the capacity or no we do not, and what improvements are needed. Joel added we will look at this in small steps, and any commitments would require Board approval, and engineering would be paid for by the Town. Chairman Sanders asked when their plant would operate. Garrett stated it would be operative for nine months out of the year, shutting down in November, and start up in February. Guy asked if Houston Mesa/Mesa Del is residential and commercially zoned, Joel stated it's within Gila County, however, Planning & Zoning has to approve any buildings, and the District has to approve for any hookups. Rob stated overtime this picture will become clearer, and if engineering expenses on the District's end become excessive, we need to look at recovery of those expenses. Joel stated the Town understands this. Chairman Sanders asked if there were any more questions, there were none.

ANNOUNCEMENTS

Chairman Sanders gave the floor to Board Member Bob O'Brien. Mr. O'Brien announced, with regret his resignation effective Thursday January 12, 2012. He added his family has relocated to Tucson. He thanked the Board and the District. Chairman Sanders thanked Bob for his service to the Board, and the District, and wished him and his family all the best. Joel stated on behalf of the District and the Employees we sincerely thank you for all you have done.

SCHEDULE ANY TOPIC OR ISSUE

Robert Sanders said our next regular meeting would be Thursday, February 9, 2012. If anyone is unable to attend, please let us know, or if anyone would like to add something specific to the agenda, please advise the office at their earliest convenience, but no later than noon the day prior to the scheduled meeting.

ADJOURNMENT

There being no further discussion, Patrick Underwood moved to adjourn at 12:55 P.M. Bob O'Brien seconded and the motion carried 4-0.

Respectfully Submitted,

Guy Pfister, Secretary

MINUTES OF THE NORTHERN GILA COUNTY SANITARY DISTRICT BOARD OF DIRECTORS, MEETING HELD ON THURSDAY MAY 10, 2012.

INVOCATION
LaRon Garrett gave the Invocation.

PLEDGE OF ALLEGIANCE
Patrick Underwood led those present in the Pledge of Allegiance.

MEETING TIME AND PLACE
Robert Sanders called the meeting to order at 12:05 P.M. in the District Conference Room.

MEMBERS PRESENT AT MEETING
The following members were present for the meeting: Robert Sanders, LaRon Garrett, Guy Pfister and Patrick Underwood.

OTHERS PRESENT AT MEETING
Garrett Goldman -Tetra Tech, Bill Easton, Gary Iles, Joel Goode, and Deniese Morgan.

CALL TO PUBLIC
Chairman Sanders asked if anyone present wanted to speak about anything not on the agenda. He explained the topic or issue would not be addressed by the Board today, but could be put on a future Agenda. There was none.

PREVIOUS MINUTES
LaRon Garrett moved to approve the Regular Meeting Minutes and Executive Meeting Minutes of April 12, 2012, and the Special Meeting Minutes of April 20, 2012, Patrick Underwood seconded and the motion carried 4-0.

APPROVE CHECKS
LaRon Garrett moved to approve the Check Register for invoices paid from April 12, 2012 through May 10, 2012. Patrick Underwood seconded and the motion carried 4-0 after explanation of the following items: Check 35555 to American Express for $1,106.28, Joel stated the AMEX card is used when we make a purchase from a vendor whom we do not have an account established. He added it is also the Costo Membership card for Deniese and himself. Check 35577 to Waste Management for $14,403.10, Joel stated there is extra tonnage this month due to additional dewatering solids. Chairman Sanders stated page 4 and 5 shows checks for Dan White/Data conversion, and he asked how it went, Deniese stated it went well, new software is up and running, there were a few technical issues on the server, however, they are being addressed, Mr. White is finishing up on some custom report requirements. Check 35611 to Global Equipment for $3,876.97, Joel stated this is a Capital Item approved in this years' budget, this is a gantry hoist for the basins. Check 35612 to Rhonda Purcell, Joel stated she is developing the NGCSD website, for information purposes, and for future online payment/account inquires. Check 35620 to Walker & Harper for $4,105.60, Joel said this includes all the solar project contracts. Check 35650 to Roy Haught Excavation, for $50,589.04, Joel said this was a required change to alleviate an issue in the headworks. Check 35671 to Waste Management for $10,983.66, Joel stated this billing is for April and the previous was for March. Chairman Sanders asked if there were any more questions on the check register, there were none.

MOTION
Guy Pfister moved to adjourn to Executive Session at 12:19 P.M., LaRon Garrett seconded, and the motion carried 4-0.

RECONVENE

Chairman Sanders called the Regular Meeting back to order at 2:06 P.M.

PLANT UPGRADES/HEADWORKS

Gary stated there has not been much change since the last Board Meeting, as the contractor is waiting on equipment. He added equipment is scheduled to arrive on June 12. Gary stated in the next few weeks, they will be completing underground electric and concrete. He added the final completion date is estimated around August 17, 2012. Chairman Sanders asked if that date was within the contract terms, Gary stated no, this is an extension due to the time delay in equipment. Joel stated we will not grant an extension until the current term is due to expire, which is the end of May. He added, there is no cost change proposed in the extension, and according to the construction schedule they plan to have equipment on-site and installed prior to the end of our fiscal year. Joel added once everything is up and running they must dismantle the old headworks, and that takes them into August. Chairman Sanders asked if there were any questions, there were none.

OPERATIONS REPORT

Gary Iles presented the April-2012 Operations Report. He reported the total monthly plant flow as 31.3 MG and 162.22 tons of bio-solids were hauled to Waste Management for disposal. Gary said the total reuse for the month was 20.163 MG with 13.182 going to Chaparral Pines, with nothing going down the gulch this month. He added we are losing around 35%-40% somewhere. Chairman Sanders asked if we are recovering the water anywhere. Gary stated we have never had standing water in the gulch, now it is constantly wet. Joel added that makes perfect sense, because the gulch is the drainage way for the end Town and it all passes through Green Valley Lake. Rob asked if there is a schedule of maintenance for the Lakes, if they are going to clean them. LaRon stated the upper one is losing capacity due to sediment and silt, he added there is no set schedule to clean it. Gary stated the Lab performed 683 tests; the Line Crew performed 80 blue stakes, televised 1700 LF of pipe, hydro-cleaned 23,700 LF of pipe, and completed 3 service inspections. Gary stated the Maintenance Department completed 32 work orders with 6 pending. Chairman Sanders asked if there were any questions, there were none.

ADMINISTRATION

Joel stated there is a copy of Resolution No. 642, he added last month the Board approved to have the County hold our election, and this is the formal notification to Gila County of the Districts' intent. Chairman Sanders asked when packets would be available for pick up, Deniese said July 9, 2012 either from the County or at the District. She added the Board was given packets at the last meeting, and should not obtain signatures prior to July 9, 2012.

MOTION

Patrick Underwood moved to approve Resolution No. 642, A Resolution calling NGCSD Board Member Election November 6, 2012. Guy Pfister seconded and the motion carried 4-0.

Chairman Sanders entertained a motion of items discussed in Executive Session

MOTION

Guy Pfister moved to appoint Bill Easton, a Qualified Elector of the District, to fill the Office of Board Member of the District to the unexpired term through December 2014. LaRon Garrett seconded, the motion carried 4-0.

Chairman Sanders asked if Joel would notify both parties.

DEPARTURE

Garrett Goldman left at 2:20p.m

When recorded deliver to
Gila County Board of Supervisors
Attention: Linda Eastlick, Elections Director

Sent 7/16/12 to Recorder

State of Arizona, County of Gila,

I, William Easton, do solemnly swear (or affirm) that I will support the Constitution of the United States and the Constitution and laws of the State of Arizona; that I will bear true faith and allegiance to the same, and defend them against all enemies, foreign and domestic, and that I will faithfully and impartially discharge the duties of the office of Northern Gila County Sanitary District Board Member according to the best of my ability, so help me God (or so I do affirm).

William Easton

Signature of Officer

STATE OF ARIZONA)
) SS.
County of Gila)

This instrument acknowledged to before me this 14th Day of June, 2012 by William Easton, known to me to be the person whose name is subscribed to the within instrument.

IN WITNESS WHEREOF, I hereunto set my hand and official seal.

Denise Morg
Notary Public

Jan 22, 2015
My Commission Expires

Deniese Morgan
NOTARY PUBLIC - ARIZONA
GILA COUNTY
My Commission Expires
January 22, 2015

Send ORIGINAL Oath to:
Gila County Elections
1400 East Ash Street
Globe, AZ 85501

File COPY at Northern Gila County Sanitary District

S:\WORKING FILES\LOTUS,WPDOCS\WPDOCS\BOARD\Appointments Oath of Office\2012 Oath of Office William Easton.wpd

ARF-1386 **Consent Agenda Item 4- O**

Regular BOS Meeting

Meeting Date: 08/07/2012

Submitted For: Linda Eastlick, Elections Director

Submitted By: Liz Mata, Administrative Clerk, Elections Department

Department: Elections Department

Information

Request/Subject

Beaver Valley Domestic Water Improvement District resignation and appointment.

Background Information

ARS 48-803(B) provides that if a vacancy occurs on the district board other than from expiration of a term, the remaining board members shall fill the vacancy by appointment of an interim member.

Evaluation

The Beaver Valley Domestic Water Improvement District Governing Board accepted the resignation of member Jerry Nicholas on September 19, 2011. During the Beaver Valley DWID Governing Board meeting of February 11, 2012, Scott Smith was appointed to complete the term which expires November 30, 2012.

Conclusion

Mr. Scott Smith has agreed to serve out the term of Mr. Nicholas.

Recommendation

The Elections Director recommends the Board of Supervisors acknowledge the resignation of Mr. Jerry Nicholas and the appointment of Mr. Scott Smith to the Beaver Valley Domestic Water Improvement District Governing Board.

Suggested Motion

Acknowledgment of the resignation of Mr. Jerry Nicholas from the Beaver Valley Domestic Water Improvement District and the appointment of Mr. Scott Smith to complete the term of Mr. Nicholas which expires November 30, 2012.

Attachments

ARS 48-803 (B)

Beaver Valley DWID Mtg Minutes-Oath

48-803. District administered by a district board

A. In a district that the board of supervisors estimates has a population of fewer than four thousand inhabitants, the district board may consist of three or five members. In a district that the board of supervisors estimates has a population of four thousand or more inhabitants, the district board shall consist of five members, and for a noncontiguous county island fire district formed pursuant to section 48-851, the board shall consist of five members. The estimate of population by the board of supervisors is conclusive and shall be based on available census information, school attendance statistics, election or voter registration statistics, estimates provided by state agencies or the county assessor, or other information as deemed appropriate by the board of supervisors. If the board of supervisors determines, at any time prior to one hundred twenty days before the next regular scheduled election for members of a district board, that the population of a fire district administered by a district board consisting of three members exceeds four thousand inhabitants, estimated as provided in this section, the board of supervisors shall order an increase in the number of members of the district board. If the board of supervisors determines at any time prior to one hundred eighty days before the next regularly scheduled election for members of a district board that the population of a fire district administered by a district board that consists of five members exceeds fifty thousand inhabitants as prescribed in this section, the board of supervisors shall inform the district board that it may expand to seven members. Any expansion to seven members shall occur by majority vote of the district board. The increase is effective for the election of the additional members at the next regular election of members of the district board.

B. If a vacancy occurs on the district board other than from expiration of a term, the remaining board members shall fill the vacancy by appointment of an interim member. If the entire board resigns or for any reason cannot fulfill its duties, the board of supervisors shall appoint an administrator to administer the district with the same duties and obligations of the elected board. If the board of supervisors fails to appoint an administrator within thirty days, a special election shall be held to fill the vacancies on the fire district board.

C. Members of the district board shall serve without compensation, but may be reimbursed for actual expenses incurred in performing duties required by law.

D. The board of a fire district shall appoint or hire a fire chief.

E. The district board shall elect from its members a chairman and a clerk.

F. Of the members first elected to district boards consisting of three members, the two people receiving the first and second highest number of votes shall be elected to four-year terms, and the person receiving the third highest number of votes shall be elected to a two-year term. Of the members first elected to district boards consisting of five members, the three people receiving the first, second and third highest number of votes shall be elected to four-year terms, and the two people receiving the fourth and fifth highest number of votes shall be elected to two-year terms. Thereafter, the term of office of each district board member shall be four years from the first day of the month next following such member's election. Of the members elected as additional members to a five member district board, the person with the highest number of votes is elected to a four-year term and the person with the second highest number of votes is elected to a two-year term. If a district resolves to increase the governing board to seven members pursuant to subsection A, the governing board may appoint two additional members to serve until the next general election. After the general election at which the two additional members are elected, the newly elected member with the highest number of votes serves a four-year term and the other member serves a two-year term. Thereafter, the term of office for these two new members is four years.

BEAVER VALLEY DOIMESTIC WATER IMPROVEMENT DISTRICT
BOARD OF DIRECTORS REGULAR MEETING
DRAFT MEETING MINUTES FOR FEBRUARY 11, 2012

1) **CALL TO ORDER** -- 10:30 a.m. by Chairman Bing Brown
2) **ROLL CALL OF BOARD MEMBERS** -- Sam Baker, Cullen Bennett, Dick Harpster and Bing Brown were present; there was a quorum.
3) **CHAIRMAN'S COMMENTS** -- None.
4) **SCHEDULED PUBLIC APPEARANCES** -- Scott Smith.
5) **UNSCHEDULED PUBLIC APPEARANCES** -- None
   A) **Call to the Public** -- None.
6) **APPROVAL OF LAST MEETING'S MINUTES** -- Mr. Baker moved for acceptance minutes from the meeting October 8, 2011; Mr. Bennett seconded. The motion passed. There were no meeting for November and December, 2011, or January 2012 due to a lack of a quorum each of those months.
7) **FINANCIAL REPORT**
   A) **Account Balance** -- Chairman Brown reported the district's bank statement for Jan., 31, 2012 showed a total of $417.76. The increase of three cents from previously reported balance was due to interest. The total reflects a balance of $267.73 in the checking account and $150.03 in savings.
   B) **Other Financial Information** -- Chairman Brown said the bank reports its $15.00 monthly service fee must be levied and then refunded each quarter.
8) **CORRESPONDENCE** -- Chairman Brown reported he had received a email from USDA and directors Baker and Bennett reported calls from Mike Davoren (see Agenda Item 11 below).
9) **NOMINATION FOR BOARD MEMBER**
   A) **Qualifications** -- Chairman Brown introduced Scott Smith who owns a home in Beaver Valley's Unit 4 and asked him to give the board members a brief summary of his professional background. He replied he had experience in management, being an entrepreneur and working as a mortgage banker.
   B) **Action** -- Chairman Brown Nominated Mr. Smith to fill the remainder of the term of Jerry Nicholas, who resigned in September, 2011; Mr. Baker seconded. The board approved unanimously.
10) **REPORTS & COMMUNICATIONS, INCLUDING POSSIBLE ACTIONS** --
   A) **U.S. Agriculture Dept. load application** -- Chairman Brown reported he had contacted Loretta Orona, area specialist for Rural Development, to determine the status of the district's application. Her response was: Your application is at a standstill right now because Rural Development cannot obligate funds on an estimate and that is all I have currently received from the District." She added, "What we really need is to get a concrete purchase price from the current water company owner in order to proceed."
   B) **Negotiations for purchase of BV Water Co.** -- Mr. Baker reported he had spoken to the water company owner, Mr. Daveron, this morning and he will meet with him tomorrow to discuss purchase of the water company. In today's discussion, Mr. Daveron did not disclose a price for the company or other details. Mr. Bennett said he had received a call from Mr. Daveron asking who, other than Mr. Baker, was negotiating the purchase and that he replied that it had been Mr. Nicholas, who resigned from the board. Mr. Baker said he would try again this weekend to determine the price and appropriate details, including explaining again to Mr. Daveron that the best source of funds for Beaver Valley residents to use was a low-cost government loan and that commercial banks concurred.
11) **BOARD MEMBERS' COMMENTS** --
   A) There were no suggestions for business for the next board meeting (March 10, 2012).
   B) Other topics -- None.
12) **ADJOURNMENT** -- 11:24 a.m.

Prepared by Bing Brown 2/10/12

Jerry L Nicholas
586 N Possum Lane
Payson AZ 85541

Beaver Valley Domestic Water Improvement District
963 Beaver Flat Road
Payson AZ 85541

Date: 20 Sep 2011

Subject: Board Resignation

Board Chairman, James C (Bing) Brown:

Please find enclosed a hard copy of my resignation that I emailed to you and all Board members on September 19, 2011. I called the Gila County Elections department today and according to them, the board is to accept my resignation and then send a copy of the minutes to the County Elections department reflecting same.

I'm sending this signed copy of the emailed version just to be sure I've complied with requirements to provide my resignation in writing.

I also went to Chase bank today and informed them of my resignation and that I wanted my name removed from the BVDWID accounts. Lisa Murphy, Assistant Vice President of Business banking, informed me you need sign some paperwork to officially remove me. Please do this ASAP. According to Lisa, my name was removed from the account today September 20, 2011. However, but your signature is apparently still required to make it official. I will be following up with Lisa to insure that this is accomplished in a timely manner.

Sincerely,

Jerry L Nicholas

CC: Sam K Baker, Richard Harpster, Ralph Cullen Bennett, Gila County Election Dept.

BVDWID - Important Message

From: **Jerry Nicholas** (jerrylori55@msn.com)
Sent: Mon 9/19/11 3:21 PM
To: Bing Brown (bingbrown@q.com); Cullen Bennett (cullen@azfivestar.com); Dick Harpster (dickharpster@hotmail.com); Sam Baker (ilscsam@aol.com)

To: All Beaver Valley DWID Board Members,

This is to inform you that I am resigning my position as a board member of the Beaver Valley DWID effective immediately. I have been pondering this decision for some time now and have decided that it is time to move on. My reasons are personal.

I will be removing my name from our bank account at the Chase bank in Payson within the next 2 business days.

Also, I have certain records, including bank records, and some other DWID property to turn over to the Board. Please advise me how and when you would like this to occur.

I wish you all the best in your continued efforts to improve & enhance Beaver Valley's drinking water supply.

Regards,
Jerry L Nicholas

When recorded deliver to
Gila County Board of Supervisors
Attention: Linda Eastlick, Elections Director

LOYALTY OATH OF OFFICE

STATE OF ARIZONA)
: ss.
COUNTY OF GILA)

I, hereby do solemnly swear that I, Scott D. Smith, will support the Constitution of the United States and the Constitution and Laws of the State of Arizona; that I will bear true faith and allegiance to the same and defend them against all enemies whatsoever, foreign and domestic, and that I will faithfully and impartially discharge the duties of Governing Board Member, for the Beaver Valley DWID district, so help me God.

Signature

Subscribed and sworn to before me this 4th day of June, 2012

Jessica Brady
Notary Public

My Commission Expires:

Aug 6, 2014

JESSICA BRADY
NOTARY PUBLIC - ARIZONA
MARICOPA COUNTY
My Commission Expires
August 6, 2014

ARF-1362 **Consent Agenda Item 4- P**

Regular BOS Meeting

Meeting Date: 08/07/2012

Submitted For:	Jacque Durbin, Deputy Court Administrator	Submitted By:	Coleen Stevens, Administrative Assistant, Superior Court
Department:	Superior Court	Division:	Justice Court-Payson

Information

Request/Subject

2012 Appointment of Charles Adornetto as Justice of the Peace Pro Tempore for Payson and Globe Regional Justice Courts in Gila County.

Background Information

An additional Justice of the Peace Pro Tempore is needed to serve in the Globe and Payson Regional Justice Courts. Judge Dorothy Little has requested appointment of Charles Adornetto to meet this need based on Mr. Adornetto's previous experience.

Evaluation

Judge Dorothy Little requests the appointment of Judge Charles Adornetto as Justice of the Peace Pro Tempore for the Globe and Payson Regional Justice Courts.

Due to exigent circumstances requiring qualified judicial officers for those occasions when conflicts arise or Justices of the Peace are absent, or otherwise unavailable, it is necessary to appoint additional Justices of the Peace Pro Tempore to serve from time to time as required. Funds are already included in the Justice Court budgets.

Conclusion

There are times when Justices of the Peace Pro Tempore are necessary for Gila County to ensure there are qualified judicial officers available to serve on those occasions when Justices of the Peace are absent, have a conflict with a case, or are otherwise unavailable.

Recommendation

It is recommended that the Board of Supervisors approve the appointments of Judge Charles Adornetto as Justice of the Peace Pro Tempore for the Globe and Payson Regional Justice Courts.

Suggested Motion

Approval of the appointment of Judge Charles Adornetto as Justice of the Peace Pro Tempore of the Globe and Payson Regional Justice Courts for a period of five months from August 1, 2012, through December 31, 2012.

Attachments

BOS APPROVAL - Charles Adornetto

Admin. Order - Adornetto

BOS Memo - Adornetto

APPROVAL OF APPOINTMENT OF
JUSTICE OF THE PEACE PRO TEMPORE

The Presiding Judge of the Superior Court in Gila County has requested the reappointment of **Charles Adornetto** as a Justice of the Peace Pro Tempore of the Payson and Globe Regional Justice Courts in Gila County for the term of five (5) months (August 1, 2012 through December 31, 2012), unless terminated earlier by Order of the Presiding Judge, pursuant to A.R.S. §22-121 for the purpose of enhancing the court's ability to process cases.

NOW, THEREFORE, be it known that the Gila County Board of Supervisors approves such appointment.

Dated _____ 2012.

GILA COUNTY BOARD OF SUPERVISORS

By: _____
Tommie C. Martin, Chairperson

FILED

IN THE SUPERIOR COURT OF THE STATE OF ARIZONA

IN AND FOR THE COUNTY OF GILA

2012 JUL 9 PM 1:34
ANITA ESCOBEDO, CLERK
BY _____ DEPUTY

IN THE MATTER OF THE APPOINTMENT OF JUSTICE OF THE PEACE PRO TEMPORE FOR PAYSON REGIONAL JUSTICE COURT AND GLOBE REGIONAL JUSTICE COURT	)	ADMINISTRATIVE ORDER No. 20__ PJC - AO 2012 0000 1

Because of exigent circumstances requiring qualified judicial officers when conflicts arise or Justices of the Peace are absent,

IT IS HEREBY ORDERED, pursuant to A.R.S. §22-121, appointing **Charles Adornetto** as Justice of the Peace Pro Tempore of the Payson Regional Justice Court and the Globe Regional Justice Court to serve from time to time as requested and subject to the availability of funds of the Justice Court. The term of this appointment shall be for five (5) months (August 1, 2012 through December 31, 2012), unless terminated earlier by Order of the Presiding Judge.

Dated July 8 2012.

Presiding Judge

cc: **Hon. Gary Goetteman**
Globe Regional Justice Court
Gila County Courthouse

Hon. Dorothy Little
Payson Regional Justice Court
714 South Beeline Highway
Payson, Arizona 85541

Jacque Durbin
LJ Court Administrator
Gila County Courthouse

Coleen Stevens
Superior Court Administration
Gila County Courthouse

Superior Court
Of Gila County

PETER J. CAHILL
Presiding Judge
Extension 8686

MARY HAWKINS
Court Administrator
Extension 8671

GILA COUNTY COURTHOUSE
1400 EAST ASH
GLOBE, ARIZONA 85501
(928) 425-3231

ROBERT DUBER, II
Judge, Division II
Extension 8690

MEMORANDUM

DATE: **July 6, 2012**

TO: **Gila County Board of Supervisors**

FROM: **Peter J. Cahill, Presiding Judge**

RE: **2012 appointment of Judge Charles Adornetto** as **Judge Pro Tempore for Payson and Globe Regional Justice Courts**

I have appointed the individual below, as Judges Pro Tempore, for Payson and Globe Regional Justice Courts (a copy of the Administrative Order is enclosed).

- **Charles Adornetto** **Globe/Payson**

The appointment is for a period of five (5) months (August 1, 2012, through December 31, 2012), and I am requesting that the Board approve this appointment pursuant to A.R.S. §22-121. I have enclosed a proposed approval form for Judge Charles Adornetto for the Board to consider.

/cs
Enclosures

ARF-1366 **Consent Agenda Item 4- Q**

Regular BOS Meeting

Meeting Date: 08/07/2012

Submitted For: Malissa Buzan, CAP/Housing Services Manager

Submitted By: Marian Sheppard, Chief Deputy Clerk, BOS, Clerk of the Board of Supervisors

Department: Community Services Division

Information

Request/Subject

Gila County Community Action Program Advisory Board Updated and Corrected Membership List

Background Information

The Gila County Board of Supervisors established the Gila County Community Action Program (CAP) Advisory Board on January 20, 1998, and thereafter bylaws for this Board were developed and implemented. The members of the CAP Advisory Board shall consist of a minimum of nine (9) members not to exceed a maximum of twelve (12) members. At present there are 9 members serving on this Board. Three (3) members are appointed by the Board of Supervisors as representatives of the Board of Supervisors; three (3) members are low-income representatives who must reside in a low-income community, who are elected by the CAP Advisory Board; and three (3) members (or the balance of the Board if there are more than 3 members) are private sector officials or members of business, industrial, labor, religious, welfare, education or other major groups and interests in the community, who are elected by the CAP Advisory Board.

Evaluation

Throughout the past year, the Gila County Board of Supervisors (BOS) has been receiving updated information on boards, commissions and committees appointed by the BOS. A review has recently been conducted of the Gila County CAP Advisory Board.

Conclusion

The membership of the Gila County CAP Advisory Board has been reviewed and changes have been made to ensure that each member is represented according to the Gila County CAP Advisory Board Bylaws.

Recommendation

It is recommended that the Board of Supervisors accept the udpated and corrected membership list for the Gila County CAP Advisory Board.

Suggested Motion

Approval to accept the updated and corrected membership list for the Gila County Community Action Program Advisory Board.

Attachments

GC Community Action Program Advisory Board Membership List

GC Community Action Program Advisory Board Bylaws

GILA COUNTY COMMUNITY ACTION PROGRAM ADVISORY BOARD

(Proposed to BOS on 08/07/12 and, if approved, the list will be as follows)

NAME OF MEMBER	TYPE OF APPOINTMENT Mark with A, B, C, D or E – see below	NEW APPOINTMENT OR REAPPOINTMENT (Include BOS approval date next to letter) New Appointment: Choose "A" or "B" A -for existing vacancy or B -to fill a vacancy created by (provide name) or Reappointment: Mark with a "C" and include number of years served prior to most recent appointment		DATES OF TERM (Put the month, day and year both beginning & ending dates)	LENGTH OF TERM FOR CURRENT APPOINTMENT (# of years)
Margaret Celix (Public Sector-appointed by BOS)	B	C	12	01/01/09-12/31/12	4
Lynn Canning (Public Sector-appointed by BOS)	B	C	4	01/01/12-12/31/15	4
Audry Opitz (Public Sector-appointed by BOS)	B	A	-	01/01/10-12/31/13	4
John Zilisch (Low-Income Sector-elected by CAP Board)	C	A	-	02/15/12-12/31/15	3 years, 11 months
Annie Hinojos (Low-Income Sector-elected by CAP Board)	C	C	22	01/01/10-12/31/13	4
Nolberto Waddell (Low-Income Sector-elected by CAP Board)	C	C	4	01/01/10-12/31/13	4
Vickie Quesada (Private Sector-elected by CAP Board)	C	C	11	01/01/10-12/13/13	4
Barbara Leetham (Private Sector- elected by CAP Board)	C	C	4	01/01/12-12/31/15	4
Ramona Ortiz (Private Sector-elected by CAP Board)	C	A	-	01/01/10-12/31/13	4

Appointment Designation Definitions:

A) Statutory District Appointment: Member must reside within the supervisorial district boundary from which he/she is appointed.

B) Supervisor Appointment: Member unrestricted by district.

C) Joint Appointment: Membership is comprised of appointments from different jurisdictions. Appointments made by other entities are acknowledged by the Board of Supervisors.

D) County at Large: Members are unrestricted by district and can be recommended by appointment by any supervisorial district or by the committee.

E) Alternate Members: As defined by individual committee criteria.

GILA COUNTY ARIZONA

By-Laws

of the

GILA COUNTY COMMUNITY ACTION PROGRAM ADVISORY BOARD

SFY 2012

Arizona Community Action Association

Advocating, Educating and Partnering to Prevent and Alleviate Poverty

Helping People, Changing Lives

Table of Contents

ARTICLE I INTRODUCTION 1

Section I Name 1

Section II Description 1

ARTICLE II Statement Of Purpose 1

ARTICLE III Advisory Board 2

Section I Membership & Tripartite Sectors 2

Section II Composition 2

Section III Petition Procedure: 3

Section IV Residence 4

Section V Terms of Office 4

Section VI Vacancies 4

Section VII Removal of Officers 5

Section VIII Meetings 5

Section IX Powers and Duties 7

Section X Conflict of Interest 8

ARTICLE IV OFFICERS 8

Section I Officers of the Board 8

Section II Election of Officers 8

Section III Duties of Officers 8

ARTICLE V COMMITTEES 9

Section I General Provisions 9

Section II Appointment 9

Section III Membership and Officers 9

Section IV Standing Committee 9

Section V Term of Office 9

Section VI Committee Quorum 10

Section VII Committee Voting 10

ARTICLE VI AMENDMENT 10

ARTICLE VII DISSOLUTION 10

ARTICLE VIII PUBLIC ACCESS TO GRANTEE INFORMATION 10

ARTICLE IX FISCAL YEAR AND ANNUAL BUDGET 10

ARTICLE I INTRODUCTION

Section I Name

The name of the organization shall be the Gila County Community Action Program Advisory Board.

Section II Description

The Gila County Community Action Program Advisory Board as established pursuant to action adopted by the Gila County Board of Supervisors on January 20, 1998. The location of the Gila County Community Action Program (The Agency) and the Gila County Community Action Program Advisory Board is 5515 S. Apache Avenue, Suite 200, Globe, Arizona 85501.I

ARTICLE II Statement Of Purpose

The purpose of said organization is to focus on the low income population as follows:

A. To provide a range of services and activities with a measurable and potentially major impact on the causes of poverty in the County, its local communities, or areas within the local communities where poverty is a particularly acute problem.

B. To provide activities designed to assist low income participants including the elderly, to promote self-sufficiency by assisting program participants to secure and maintain employment, emergency housing and utility assistance, health, nutrition and related assistance.

C. To provide referrals to clients to those agencies which may provide, on an emergency basis, for the provision of such supplies and services, nutritious foods, and related services, to alleviate conditions of starvation and malnutrition among the low-income population.

D. To coordinate and establish linkages between governmental and other social services programs to assure the effective delivery of such services to low-income individuals.

E. To encourage the use of entities in the Private Sector of the community in efforts to ameliorate poverty in the community.

F. To communicate and network with all federal, state, county, city, and non-governmental organizations in achieving these objectives.

G. To pursue and obtain grants and or loans to provide funding to provide the above mentioned services.

ARTICLE III Advisory Board

Section I Membership & Tripartite Sectors

A. The membership of the organization shall be a board consisting of a minimum of nine (9) members not to exceed a maximum of twelve (12) members. One-third (1/3) of which are elected officials or their representatives, at least one-third (1/3 low-income, and one-third (1/3) Private Sector.

B. All members of the Board must be 18 years of age or older and residents of Gila County.

Section II Composition

The Gila County Community Action Program Advisory Board shall be appointed by the Gila County Board of Supervisors following recommendation of the Economic Opportunity Act of 1974 as amended by the Community Services Act of 1974 and regulations promulgated there under.

A. Public Sector

1. County Board of Supervisors: One-third (1/3) of the members are representatives of the Gila County Board of Supervisors.
   Selection Procedures: Appointed by Gila County Board of Supervisors.

2. Alternates: Should a representative of the Board of Supervisors be unwilling or unable to serve on the Board, that member may select a representative to serve as an alternate on the Board on the Member's behalf either full time or when he/she is unable to attend a specific meeting.

   These alternates need not be public officials themselves, but they shall have full authority to act for the public officials whom they represent at meetings of the Board.

B. Low Income:

1. At least one-third (1/3) of the members are low-income representatives who must reside in a low-income community.

Selection Procedures: Low-Income members are, selected in accordance with democratic selection procedures (Low-income representatives will be sought out by advertising in local newspaper and posted notices(with all instructions and information to being on the Community Action Program in said community- ballot boxes to be located within all local Community Action Agency offices that will be used for delivering ballots to assure that the candidates are representative of the low-income residents of the

designated geographic area for which elections were held. Then the advisory board will vote on the low-income representative for that area.

2. Alternates: Each representative of the low-income sector may have an alternate who will have full voting rights in the absence of the member.
3. Such alternate shall be elected at the same meeting using the same procedures as that used to elect the representative. There shall be no more than one alternate for each representative; an alternate may not hold office on the Advisory board concurrent to his/her term as an alternate.

C. Balance of Board: The remainder of the Advisory Board membership consists of Private Sector officials or members of business, industrial, labor, religious, welfare, education, or other major groups and interests in the community.

Selection Procedures: Selection procedures for Private Sector: Private sector representatives shall be voted for, and elected by, the elected officials and low-income representatives on the Community Action Program Advisory Board and officially approved thereafter by the Board of Supervisors.

The representative groups of the Private sector shall be reviewed annually by the Gila County Community Action Program Advisory Board members representing the public and low-income sectors, acting without the Private Sector members, to deliberate, vote upon and make recommendations to the Board of Supervisors if changes(s) are deemed appropriate. Specific consideration shall be given to maintain a balance between social service organizations, business, and labor.

Section III Petition Procedure:

Any individual group or agency that feels it is not adequately represented on the Advisory Board may petition the Advisory Board for such representation. A petition must contain valid signatures of fifty-one percent (51%) of the Board of Directors (or equivalent body) of the group seeking representation. The Advisory Board meeting at which the petition is considered and voted upon shall be a regular public meeting of the Board, after ten (10) days written notice, at which time the petitioning group and the Board of Supervisors with a written statement of the Advisory Board's recommendations, including the reasons for the decision.

The Board of Supervisors shall act on the Community Action Program Advisory Board's recommendations within one (1) month at a regularly announced public meeting and render a final decision on the petition. In the

event the petition is approved by the Board of Supervisors, and there is an available opening on the Advisory Board, a representative of the organization will be seated. If no opening currently exists, the representative of the organization will be considered when a vacancy occurs.

In the event the petition is denied, the organization may resubmit its petition to the Community Action Program Advisory Board and Board of Supervisors. Community Services Block Grant Administration shall be notified after a decision has been reached.

Section IV Residence

All members of the Board shall be residents of Gila County, Arizona, excluding reservation areas. Low-income representatives must reside in low-income communities.

Section V Terms of Office

Term of Appointment: The term of appointment of each member of the Advisory Board shall be for a period of four years. Advisory Board members shall be re-elected or their successors elected at the date of the annual meeting and the appointment shall become effective on the date of the annual meeting, conditional on appointment of the Board of Supervisors. The term or appointment shall be the same as that established for the Board of Supervisors.

Section VI Vacancies

Vacancies: There is a vacancy on the Advisory Board when: a member has been notified of his/her official removal by action of the Advisory Board for cause; a member notifies the Advisory Board of his/her resignation; when the designation officials Gila County Board of Supervisors remove a public official; or when a public official leaves office.

A. When a vacancy occurs in the low-income (Article III, Sec. 2 A, B, C) or Private Sector (Article 3 A, B, C), the "alternate" shall assume the title and responsibilities of "representative" for the balance of the unexpired term. If a vacancy occurs and there is no alternate, this vacancy will be filled within 90 days in addition the vacancy shall be filled according to the selection procedures set forth in Section II hereof to fill the unexpired term.

B. In the event a vacancy occurs in the public sector, the Advisory Board shall ask the Board of Supervisors to select another public official within 90 days.

C. In the event a vacancy occurs in the Private Sector, the Advisory Board shall select another Private Sector Board Member within 90 days.

D.

Section VII ***Removal of Officers***

Upon the affirmative vote of at least two-thirds (2/3) of the members present and voting at a duly constituted meeting, the Board Members may remove a Board Member for cause as defined in the Gila County Community Action Program By-Laws.

Section VIII ***Meetings***

Written minutes shall be completed for each and all meetings to include a record of votes on all motions. Previous minutes of meetings will be distributed to all Advisory Board and Committee members within seven (7) days prior to the next called meeting. Following approval of the approved minutes of the previous meeting by the Board,

A copy of the minutes of each meeting shall be available at the Gila County Community Action Program office for inspection by the general public within seven (7) days following the Board meeting in which the minutes were approved.

A. Types of Meetings:

1. Annual Meeting: There shall be an annual meeting held in August of each year. The time for holding the annual meeting of the members of the Advisory Board may be altered by a majority vote of the members at any meeting thereof. At the annual meeting the Advisory Board will go over and update all Advisory Board By-laws and any and all revisions shall be completed and ratified by the Advisory Board at the next regular Meeting.

2. Regular Board Meeting: Regular meetings of the Advisory Board shall be scheduled once quarterly to conduct the Advisory Board affairs at a time and location designated by the Chairperson.

3. Special Board Meeting: Special meetings may be called by the Board Chairperson or by the Vice-Chairperson upon the written request of twenty percent (20%) of the members. The purpose or purposes of such meeting shall be set forth in the notice thereof.

B. Meeting Requirements

1. Quorum Requirements: The quorum for a meeting of the Advisory Board shall be at least fifty percent (50%) of the non-vacant seats on the Board.

2. Attendance: An Advisory Board member who is absent from three (3) consecutive meetings without being represented by his/her alternate at any one

of these meetings, shall forfeit his/her seat on the Advisory Board except where a leave of absence has been applied for and granted by vote of the Advisory Board. The Chairperson shall notify the individual and the appropriate organization in writing at least fourteen (14) days in advance of the next Advisory Board meeting and recommend appropriate action be taken to assure substantial attendance or replacement.

3. Time and Place: All Advisory Board meetings must be reasonably convenient in time and place.

4. Notice: There shall be at least ten (10) days' notice of all regular meetings and three (3) days' notice for all special meetings. A public notice stating time and place shall be posted at the Gila County Courthouse and Community Action Program office.

5. Voting: A majority of those Advisory Board members present and voting shall decide any matter, except where these By-Laws or Robert's Rules of Order require greater majority (e.g. two-thirds 2/3 or three-fourths (3/4) or unanimous.)

6. Proxies: Proxy voting is prohibited. However, each organization or agency empowered to select a representative, pursuance to Article III of the By-Laws; may designate an alternate representative, who shall also be appointed by the Board of Supervisors to represent said organization or agency in the absence of the regular member, with full voting privileges; however, an alternate may not hold office.

7. Compensation of Commission Members: Regular compensation may not be paid to Advisory Board members. Mileage compensation shall be paid to Advisory Board members traveling twenty-five (25) miles or more to Board meetings. A review and allocation of budgeted funds for this purpose shall be conducted annually by the Board.

8. Operating Procedures: The order of business at meetings shall be determined by a written agenda. Unless specific procedure is provided for these by-laws, the rules of parliamentary conduct in Robert's Rules of Order shall be the procedural authority for all meetings. Also all meetings shall be conducted in accordance with the Arizona Open Meeting Law. A.R.S. 38-431 with the exception of Executive Sessions, as authorized by the Arizona Revised Statutes.

If an instance arises where Roberts Rules of Order is in conflict with the Arizona Open Meeting Law, A.R.S. 38-431 shall prevail.

Section IX ***Powers and Duties***
of the Gila County Community Action Program Advisory Board

1. To exercise all powers which the Board of Supervisors chooses to delegate to the Advisory Board, and those powers that are able to be delegated.

2. To oversee the extent and quality of the participation of the low-income population in the programs of the Community Action Program and Agency.

3. To determine, subject to Community Services Block Grant approval, rules and procedures for the Board.

4. To elect the officers, Executive Committee, and assign members of all other committees of the Board.

5. The Advisory Board shall deliberate and vote upon the following matters and submit its written recommendations to the Board of Supervisors for the fiscal year.

6. Determination of overall CSBG program plans and priorities in conjunction with CAHS needs assessment to be completed every three years.

7. Approval of all program proposals and budgets ongoing and based on the Community Action Plan in order to submit to the State CSBG office. This will be done on a yearly basis in conjunction with the May Quarterly Meeting so the yearly CAP Plan may be submitted for the start of the Fiscal year.

8. Approval of all evaluation and assessment studies and reports that pertains to the locations of Community Action Program Offices that best serves Gila County.

9. Approval of all arrangements for delegating the planning, conduct, or evaluation of a component of the work program.

10. To provide direction and oversight to all programs carried out under Federal anti-poverty grants in accordance with the terms of the grants, providing such programs are not contrary to said laws.

11. To participate and approve on an ongoing basis on all plans and assessments including trainings for the Community Action Program.

Section X ***Conflict of Interest***

No person, who is an officer or employee of an organization subcontracted by the Community Action Agency to perform a component of the CSBG work program, may sit on the Advisory Board. No employee or relative, or spouse of any agent of the Community Services Block Grant or the Community Action Agency may serve on the Advisory Board in any capacity which will require him/her to act as an agent of or as attorney for the Community Services Block Grant in its dealings with the Community Action Program or with any other Federal agency. A relative is defined as:

Husband	Wife	Father	Mother
Grandparents	Stepparents	Father-in-law	Mother-in-law
Brother	Sister	Brother-in-law	Sister-in-law
Son	Daughter	Son-in-law	Daughter-in-law

ARTICLE IV **OFFICERS**

Section I ***Officers of the Board***

Officers of the Board shall consist of a Chairperson, a Vice-Chairperson, and a Secretary.

Section II ***Election of Officers***

The Chairperson, Vice-Chairperson, and Secretary shall be selected at the Annual Meeting by the Board and shall serve for a term of two (2) years.

Section III ***Duties of Officers***

1. Chairperson. Shall preside at all meetings, appoint committees with the concurrence of the Board and serve as ex-officio member of all committees, appoint committee chairperson, represent the Board at official functions, work closely with the Manager of the Community Services Program, and function in such capacities as the Board may designate. The Chairperson shall serve as chairperson of the Executive Committee.

2. Vice-Chairperson. The Vice-Chairman shall serve in the absence of the Chairman.

3. Secretary. The Secretary shall be responsible for the reading and recording of the minutes at each meeting. The Secretary shall preside over the meeting in the absence of the Chairperson and Vice-Chairperson.

ARTICLE V COMMITTEES

Section I General Provisions

The Advisory Board shall establish ad hoc committees as needed.

Section II Appointment

Members of the committee shall be appointed by the Chairperson, with the concurrence of the Advisory Board. The term of appointment shall expire at the annual meeting. At the beginning of each program year, it may be necessary for the Chairperson to appoint temporary committees to carry on the business of the Advisory Board until formal and "permanent" appointments are made. In such event, the temporary committee shall serve until formal appointment procedures are completed.

Section III Membership and Officers

All committees with important policy-making or advisory function shall fairly reflect the composition of the Advisory Board. Each standing committee shall consist of at least three (3) Advisory Board members; the membership of other committees may vary in size. Additional committee members from outside the Advisory Board may be appointed to the committee by the Advisory Board Chairperson for specific purposes on an ad hoc basis. Any such ad hoc members duly appointed by the Chairperson shall have a full and equal vote as regular members of that standing committee. To assure that the several standing committee chairmen fairly represent the composition of the Board, committee chairpersons shall be appointed by the Chairperson of the Board.

Section IV Standing Committee

The Advisory Board may establish an Executive standing committee consisting of the officers.

1. Executive Committee. The Advisory Board Chairperson, with the concurrence of the Advisory Board, shall appoint an executive committee comprised of the elected officers. This Committee shall have the authority to transact routine business and emergency matters between meetings of the full Advisory Board. All decisions made by the Executive Committee shall be ratified by the full Advisory Board at the next regular meeting.

Section V Term of Office

Committee members shall hold office from the date of their appointment until the annual meeting. Vacancies shall be filled by the Advisory Board Chairperson with the concurrence of the Advisory Board to fill the unexpired terms.

Section VI ***Committee Quorum***

The quorum of any committee meeting shall be fifty percent (50%) of the non-vacant seats on the committee.

Section VII ***Committee Voting***

All matters shall be decided by a majority vote of the committee members present.

ARTICLE VI **AMENDMENT**

These By-Laws may be altered, amended, or repealed by affirmative vote of two-thirds (2/3) of the Advisory Board, subject to final approval of the Board of Supervisors. Any proposed alteration, amendment or repeal shall be contained in a written notice to each member of the Advisory Board mailed at least ten (10) days prior to any meeting at which an amendment of these By-Laws is to be considered.

ARTICLE VII **DISSOLUTION**

In the event dissolution of the Advisory Board should become necessary, it shall be affected in accordance with pertinent directives of State and Federal Law.

ARTICLE VIII **PUBLIC ACCESS TO GRANTEE INFORMATION**

The Gila County Community Action Program shall make available for inspection and examination of those documents and records which pertain to activities assisted by the Community Services Block Grant. An exception to this rule is the inspection of confidential individual client records.

ARTICLE IX **FISCAL YEAR AND ANNUAL BUDGET**

The Fiscal Year of the agency shall be from July to the following June. The Gila County Community Action Program Annual Budget shall be presented to the Advisory Board for their review 10 days prior to the May Meeting each year with approval at the May meeting. In the event a meeting is not held in May, the presentation and approval will be scheduled for the next regular meeting.

ARF-1399 **Consent Agenda Item 4- R**

Regular BOS Meeting

Meeting Date: 08/07/2012

Submitted For: Tommie Martin, Member, Board of Supervisors

Submitted By: Pamela Fisher, Supervisor's Staff Specialist, Board of Supervisors-District 1

Department: Board of Supervisors-District 1

Information

Request/Subject

Payson Rodeo Committee's request to use the Payson Court Complex grounds for a Chili Cook Off on September 15, 2012

Background Information

The Payson Rodeo Committee is requesting the use of the grounds/parking lot at 714 S. Beeline for their annual Chili Cook Off. They will provide liability insurance coverage, trash bins, port-a-potties and clean up will be provided.

Evaluation

This event will be beneficial to the community.

Conclusion

N/A

Recommendation

Chairman Tommie Martin recommends that the request of the Payson Rodeo Committee for a Chili Cook Off on the Payson Court Complex be approved.

Suggested Motion

Approval of a request by the Payson Rodeo Committee, a non-profit organization, for the use of the Payson Court Complex grounds for a Chili Cook Off on September 15, 2012, from 8:00 a.m. to 6:00 p.m.

Attachments

Payson Rodeo Committee Building Use Application Form

GILA COUNTY
BUILDING USE APPLICATION FORM

Please complete all items listed below and submit to the Gila County Administration Department at 1400 E. Ash, Globe, Arizona 85501. A copy will be submitted to Gila County Facilities Management once the application is approved. **Facilities Management MUST be notified 24 hours in advance to unlock doors automatically.** Lines 1 through 9 ***with signature*** must be filled out before application is considered complete.

1. **Name of Organization: PAYSON RODEO COMMITTEE
   **Address: P.O. BOX 937 City, Zip PAYSON, AZ 85547
   **Phone Number: 928-468-6684
2. **Name of Responsible Person: JOHN LANDINO V.P.
3. **Building Requested: N/A
4. **Room or Area requested: OUTSIDE AREA ADJACENT TO CO. BLDG'S COURT CO COMPLEX PARKING LOT
5. **Date(s) wanted to use the above room or area: SEPT 15, 2012 8-6P
6. **Do You Need Doors Unlocked? N/A Which Doors (give door #) N/A
7. **Beginning Time: 8:00 AM Ending Time: 6:00 PM
8. **Number of People Attending: 400
9. **Type of Function (commercial, political, fundraiser, etc.): NON-PROFIT FUND RAISER - CHILI COOK OFF
10. Table and Chairs Needed in Addition to what is provided: Ø
11. Fees:

Rent:	$
Equipment:	$
Cleaning Deposit:	$
Other:	$
TOTAL:	$

Cleaning Deposit to be refunded to: _____

12. Proof of Insurance – Certificate of Liability Insurance [X] Yes [ ] No

Additional Information: # G24602692 ARCH AMERICAN INS. $1M
(UMBRELLA) XCPN 0114517 0 " " $1M

Applicant Certifies that the above information is correct.

7/19/2012 — Date

Signature of Applicant

Permit, if required, will be issued pending approval. _____

2/14/03

ARF-1371 **4- S**

Regular BOS Meeting

Meeting Date: 08/07/2012

Reporting Period: Payson Regional Constable's Monthly Report for June 2012

Submitted For: Colt White

Submitted By: Michelle Keegan, Administrative Clerk Senior, Constable - Payson

---

Information

Subject

Payson Regional Constable's Monthly Report for June 2012

Suggested Motion

Approval of the June 2012 monthly activity report submitted by the Payson Regional Constable.

Attachments

Payson Regional Constable's Office Monthly Report June 2012

David Vaughn
Deputy Constable

Michelle Keegan
Clerk of the Constable

Office of
Payson Regional Constable
Colt White

June 2012
MONTHLY REPORT

TABLE OF CONTENTS

MONTHLY ACTIVITY LETTER

MONTHLY COMPARISON SHEET

FEES COLLECTED

SERVICE SUMMARY REPORT

LOG OF FEES

LOG OF NON-FEES

MILEAGE CHART

TREASURER'S RECEIPT

108 WEST MAIN STREET, PAYSON, AZ 85541 – PHONE: (928) 474-3844/FAX: (928) 468-1509

David Vaughn
Deputy Constable

Yvonne House
Clerk of the Constable

Office of
Payson Regional Constable
Colt White

July 3, 2012

Gila County Board of Supervisors
Gila County Courthouse
1400 East Ash Street
Globe, Arizona 85501

PAYSON REGIONAL CONSTABLE'S OFFICE MONTHLY ACTIVITY LETTER

For the month of **June, 2012**, the Payson Regional Constable's Office:

- Received a total of **95** papers for service
- Drove a total of **1,132** miles
- Collected a total of **$1,076.00** as follows:

Check Total	$658.00
Cash Total	418.00
Total Deposited	$1,076.00
#2272 re-deposited to register/never cashed	5.00
Paid to General Fund (Check #2294/Treasurer's Receipt #98340)	$ 1,081.00
Additional funds from the Town of Payson paid into General Fund for process serving by the Payson Constable	$ 875.00
Grand Total Paid to General Fund	**$ 1,956.00**

Respectfully submitted,

Colt White
Payson Regional Constable
Gila County, Payson, Arizona

108 WEST MAIN STREET, PAYSON, AZ 85541 – PHONE: (928) 474-3844/FAX: (928) 468-1509

CONSTABLE OFFICE STATISTICS COMPARISONS
MONTHLY TOTALS BY FISCAL YEAR 2010-2011 & 2011-2012

2010-2011 MONTH	TOTAL PAPERS	MILES DRIVEN	FEES COLLECTED	2011-2012 MONTH	TOTAL PAPERS	MILES DRIVEN	FEES COLLECTED
2010				2011			
JULY	227	1,574	$3,866.70	JULY	133	1,193	$2,708.00
AUGUST	175	1,938	$3,062.90	AUGUST	159	1,886	$2,193.28
SEPTEMBER	150	2,010	$2,702.90	SEPTEMBER	217	1,805	$2,410.45
OCTOBER	207	2,367	$2,507.40	OCTOBER	166	1,766	$2,668.20
NOVEMBER	182	1,867	$3,554.60	NOVEMBER	148	2,183	$2,018.40
DECEMBER	206	2,258	$2,770.85	DECEMBER	170	2,330	$2,100.70
JANUARY2011	194	1,885	$3,337.42	JANUARY 2012	166	2,335	$2,746.10
FEBRUARY	183	1,519	$3,123.40	FEBRUARY 2012	107	1,704	$1,674.50
MARCH	218	2,000	$5,122.25	MARCH	142	1,680	$1,539.70
APRIL	132	1,657	$2,784.76	APRIL	142	1,750	$2,545.05
MAY	153	1,681	$2,984.40	MAY	130	1,766	$1,803.05
JUNE	159	1,634	$2,697.00	JUNE	95	1,132	$1,076.00
COMPARISON TOTAL	2,186	22,390	$38,514.58	COMPARISON TOTAL	1,775	21,530	$25,483.43
				Difference	-411	-860	-$13,031.15
2011				2012			
YEAR TOTAL:	2,186	22,390	$38,514.58	YEAR TOTAL:	1,775	21,530	$25,483.43

Rev.080211

Note: Fees Collected column amounts do not include the $875.00 per month received from the Town of Payson per contract.

CHECK AND CASH RECEIVED FOR MONTH				June	2012
DATE	CHECK# / RECEIPT#	AMOUNT	CASE #	PLAINTIFF	DEFENDANT
6/1/2012	748590	$46.00	2012CV420-FD	Patricia Heidal-Baltz	Tammi Scully
6/4/2012	748591	$46.00	2012CV425-FD	Jeri Longenbaugh	Janna Golbert and Curtis Golbert
6/4/2012	748592	$40.00	5 Day Notice	Kathy Sullivan	Jill Gardiner
6/6/2012	748593/16616	$40.00	A-12-660177-C	Ann Losee Pad, LLC (Junes Legal Service)	Alfonso Luna Vazquez
6/6/2012	748594	$40.00	2012CV357-SC	Mildred Cline	Jay Hannar
6/7/2012	748595	$40.00	2012CV000438	Alex Romberger	Art Rogers
6/7/2012	748596	void			
6/7/2012	748597/18289	$46.00	2012CV440-FD	Prudential AZ Realty	Patterson
6/11/2012	748598/3680	$46.00	2012CV446-FD	Robert Coar	Debra Harris
6/12/2012	GCSO 437391	$40.00	2012DV449-FD	Rick Sexton	Joni Alexander
6/13/2012	748599/10412	$60.00	NOTICE	Barbara Grillo (Walker & Harper PC)	Bret DaCosta
6/14/2012	748600/29941	$84.00	Integrity #23839 & 23840	Carolyn Lewis C/O Integrity Law	Pine/Strw Fire and unidentified employee
6/14/2012	484001	$40.00	2012CV452-UN	David Mikulak	Lauralynn Brightwell
6/18/2012	484002/98150	$40.00	2012CV358-OV	Capital One Bank (USA), N.A. (JJL Process Corp)	David F Small & John/Jane Doe Small
6/18/2012	484003/3575	$60.00	CC2012112632	Cactus Jack's Autos, Inc. (FastTrack)	Edward Pritchard & Jane Doe Pritchard
6/18/2012	484004/14-515468192	$56.00	DR1999-016322	Shannon Lindsey	Michael Lindsey
6/19/2012	484005/3707	$88.00	Notice of Claim X 3	Barry Standifird	Town of Payson; Payson Police Department & Joshua LaManna
6/19/2012	484006/3810	$46.00	2012CV457-FD	CJ Potts	Beau Lootans & Casey Brassick
6/20/2012	484007	$40.00	2012CV461-UN	Craig Miller	DeJo Goodman
6/21/2012	484008/14263	$46.00	2012CV468-FD	Star Valley Investments	Lidia Fink
6/21/2012	484009	$40.00	2012CV469SC	Joy Richards	Robert Lantry
6/25/2012	484010	$46.00	2012000474FD	Rick Sexton	Joni Alexander
6/26/2012	484011/20175	$46.00	2012CV470-FD	Frontier Village Partners, LLC (Evans, Dove & Nelson PLC)	Taylor and Robert Pilcher
	Total deposit for June 2012	$1,076.00			
	Re-deposit check 2272 9/28/11 never cashed	$5.00			
	Adjusted Service Fees Collected for June 2012 07/03/2012 ck#2294	$1,081.00			

PAYSON REGIONAL CONSTABLE

Colt White
108 West Main Street Payson, Arizona 85541

Payson Regional Constable's Office,
Payson Regional
(928) 474-3844

Date: 7/3/2012

GENERAL CERTIFICATE of SERVICE
SERVICE SUMMARY REPORT - by DATE SERVED

6/1/2012 TO 6/30/2012

Number of Cases	Description
1	5 Day Notice To Pay Or Quit (Fee)
3	Civil Complaint (Fee)
2	Injunction Against Harassment (Fee Waived By Ct) (Fee)
1	Injunction Against Harassment (Fee)
2	Notice & Summons (Fee)
5	Notice of Claim (Fee)
1	Notice of Intent (Fee)
1	Order To Appear; Petition For Modification Of Child Support, Visitation (Fee)
2	Summons & Complaint (Fee)
1	Summons & Complaint Contract (Fee)
9	Summons & Complaint-Forcible Detainer (Fee)
1	Notice Of Hearing
4	Notice To Appear; Petition
15	Order Of Protection
1	Order To Appear

GENERAL CERTIFICATE of SERVICE
SERVICE SUMMARY REPORT - by DATE SERVED

6/1/2012 TO 6/30/2012

Number of Cases	Description
2	Order To Show Cause
16	Subpoena
4	Subpoena Trial Reset
8	Summons
15	Summons & Complaint
1	Trial Notice

Total Number of Fee Services	28
Total Number of Non Fee Services	67
Total Number of Services	95

PAYSON REGIONAL CONSTABLE

Colt White

108 West Main Street Payson, Arizona 85541

Payson Regional Constable's Office,
Payson Regional
(928) 474-3844

ITEMIZED SERVICES by DATE RECEIVED for TREASURER

6/1/2012 TO 6/30/2012

Date: 7/3/2012

Date Received	Date Served	Case Number / Service	Plaintiff / Defendant	Person To Be Served / Address	Person Served / Address	Fees / Paid	Reference	Agency	Miles / Attempts
6/1/2012	6/1/2012	2102CV420-FD	Patricia A Heidal-Baltz	Tami Scully	Tami Scully	$46.00	748590	Payson Justice Court	0
		Summons & Complaint-Forcible Detainer	Tami Scully	204 E Cedar Ln Payson, AZ 85541	800 Block W Airport Payson, AZ 85541	$46.00			1
6/4/2012	6/4/2012	2012CV425FD	Jeri Longenbaugh	Janna Golbert & Curtis Golbert	Posted	$46.00	748591	Payson Justice Court	0
		Summons & Complaint-Forcible Detainer	Janna Golbert & Curtis Golbert	712 N Colcord Payson, AZ 85541	712 N Colcord Payson, AZ 85541	$46.00			1
6/4/2012	6/4/2012	5 Day Notice	Kathy Sullivan	Jill Gardiner	Posted	$40.00	748592	N/A	0
		5 Day Notice To Pay Or Quit	Jill Gardiner	301 S Granite Payson, AZ 85541	301 S Granite Payson, AZ 85541	$40.00			1
6/6/2012	6/6/2012	A-12-660177-C	Ann Losee Pad, LLC, a Nevada limited liability company	Alfonso Luna Vazquez	Jose Reyes Luna	$40.00	748593/16616	District Court, Clark County, Nevada	0
		Summons & Complaint	Alfonso Luna Vazquez, an individual; Does I through XX, inclusive; and Roe Corporations I through XX, inclusive	403 W Summit St Payson, AZ 85541	510 S Beeline Payson, AZ 85541	$40.00			1
6/6/2012	6/6/2012	2012CV357-SC	Mildred Cline	Jay Hannar	Jay Hannar	$40.00	748594	Payson Justice Court	0
		Civil Complaint	Jay Hannar	45 N Milkyway Star Valley, AZ 85541	108 W Main Street Payson, AZ 85541	$40.00			1
6/6/2012	6/6/2012	2012CV370-SC	Kenneth Boyd	Edward Barker, Teresa Barker	Edward G Barker	$67.20		Payson Justice Court	0
		Civil Complaint	Edward Barker, Teresa Barker	5329 Rimwood Dr Strawberry, AZ 85544	5329 Rimwood Dr Strawberry, AZ 85544	$0.00			1
6/7/2012	6/8/2012	2012CV000437	Emily Jean Morton	Joshua LaManna	Joshua LaManna	$0.00		Payson Regional Justice Court	0
		Injunction Against Harassment (Fee Waived By Ct)	Joshua LaManna	402 W. Summit Street Payson, AZ 85541	101 N Forest Park Drive Payson, AZ 85541	$0.00			2
6/7/2012	6/25/2012	2012CV000438	Alex Romberger	Art Rogers	Art Rogers	$40.00	748595	Payson Regional Justice Court	0
		Injunction Against Harassment	Art Rogers	265 E Highline Dr Star Valley, AZ 85541	108 W Main Street Payson, AZ 85541	$40.00			5

ITEMIZED SERVICES by DATE RECEIVED for TREASURER

6/1/2012 TO 6/30/2012

Date Received	Date Served	Case Number / Service	Plaintiff / Defendant	Person To Be Served / Address	Person Served / Address	Fees / Paid	Reference	Agency	Miles / Attempts
6/7/2012	6/8/2012	2012CV440FD	Lee & Wayne Parent & Prudential Arizona Realty	Gary Patterson	Posted	$46.00	748597/18289	Payson Justice Court	0
		Summons & Complaint-Forcible Detainer	Gary Patterson	201 E Jura Cir Apt #2 Payson, AZ 85541	201 E Jura Cir Apt #2 Payson, AZ 85541	$46.00			1
6/11/2012	6/11/2012	2012CV446-FD	Robert G. Coar, dba Twin Lakes MHP	Debra Harris	Debra Harris	$46.00	748598	Payson Regional Justice Court	0
		Summons & Complaint-Forcible Detainer	Debra Harris	903 E. Granite Dells, #15 Payson, AZ 85541	303 N Beeline Hwy Payson, AZ 85541	$46.00			3
6/12/2012	6/13/2012	2012CV449-FD	Paul Sexton	Joni Lea Alexander	Tabatha Lea Glinzak	$40.00	GCSO 437391	Payson Regional Justice Court	0
		Summons & Complaint-Forcible Detainer	Joni Lea Alexander	109 E McKamey #1 Payson, AZ 85541	109 E McKamey #1 Payson, AZ 85541	$40.00			1
6/13/2012	6/15/2012	notice	Barbara Grillo	Bret Allan daCosta	Bret Allan daCosta	$60.00	748599		0
		Notice of Intent	Bret Allan daCosta	5655 Karla Court Pine, AZ 85544	5655 Karla Court Pine, AZ 85544	$60.00			4
6/14/2012	6/15/2012	Integrity #23839	Carolyn Lewis	Pine/Strawberry Fire District	Pine/Strawberry Fire, David Staub, Chief	$60.00	748600		0
		Notice of Claim	Pine/Strawberry Fire District	6198 Hardscrabble Mesa Rd Pine, AZ 85544	6198 Hardscrabble Mesa Rd Pine, AZ 85544	$60.00			1
6/14/2012	6/15/2012	Integrity #23840	Carolyn Lewis	Pine/Strawberry Fire District, Unidentified Employee C/O Pine/Strawberry Fire District	Pine/Strawberry Fire, David Staub, Chief	$24.00	748600		0
		Notice of Claim	Pine/Strawberry Fire District, Unidentified Employee C/O Pine/Strawberry Fire District	6198 Hardscrabble Mesa Rd Pine, AZ 85544	6198 Hardscrabble Mesa Rd Pine, AZ 85544	$24.00			1
6/14/2012	6/15/2012	2012DV452-UN	David Eric Mikulak	Lauralynn Brightwell	John Brightwell	$40.00	484001	Payson Regional Justice Court	0
		Civil Complaint	Lauralynn Brightwell	7420 N Paloma Vista Payson, AZ 85541	7420 N Paloma Vista Payson, AZ 85541	$40.00			1
6/18/2012	6/18/2012	2012CV358OV	Capital One Bank (USA), N.A.	David F Small and John/Jane Doe Small (if married	David F Small	$40.00	484002/98150	Payson Justice Court	0
		Summons & Complaint Contract	David F Small and John/Jane Doe Small (if married	5262 White Tail Ln Strawberry, AZ 85544-9700	5262 White Tail Ln Strawberry, AZ 85544	$40.00			1
6/18/2012	6/18/2012	CC2012112632RC	Cactus Jack's Autos, Inc.	Edward Pritchard & Jane Doe Pritchard	Frances Thus	$60.00	484003/3575	Moon Valley Justice Court	0
		Summons & Complaint	Edward Pritchard & Jane Doe Pritchard	3418 Eastside Drive Pine, AZ 85544	3418 Eastside Drive Pine, AZ 85544	$60.00			1
6/18/2012	6/19/2012	DR1999-016322	Shannon Lindsey	Michael Lindsey	Michael Lindsey	$56.00	484004/14515 468192	Superior Court of Maricopa County	0
		Order To Appear; Petition For Modification Of Child Support, Visitation	Michael Lindsey	6658 N Houston Mesa Rd Payson, AZ 85541	108 W Main Street Payson, AZ 85541	$56.00			2

ITEMIZED SERVICES by DATE RECEIVED for TREASURER

6/1/2012 TO 6/30/2012

Date Received	Date Served	Case Number / Service	Plaintiff / Defendant	Person To Be Served / Address	Person Served / Address	Fees / Paid	Reference	Agency	Miles / Attempts
6/19/2012	6/20/2012	Notice of Claim	Emily Jean Morton	Town of Payson, Silvia Smith, Town Clerk	Town of Payson, Silvia Smith, Town Clerk	$40.00	484005/3707	N/A	0
		Notice of Claim	Town of Payson;, Payson Police Department & Joshua LaManna	Town of Payson 303 N. Beeline Highway Payson, AZ 85541	Town of Payson 303 N. Beeline Highway Payson, AZ 85541	$40.00			1
6/19/2012	6/22/2012	Notice of Claim	Emily Jean Morton	Payson Police Department, Chief Don Engler	Payson Police Department, Chief Don Engler	$24.00	484005/3707	N/A	0
		Notice of Claim	Town of Payson;, Payson Police Department & Joshua LaManna	303 N. Beeline Highway Payson, AZ 85541	303 N. Beeline Highway Payson, AZ 85541	$24.00			2
6/19/2012	6/20/2012	Notice of Claim	Emily Jean Morton	Joshua LaManna	Joshua LaManna	$24.00	484005/3707	N/A	0
		Notice of Claim	Town of Payson;, Payson Police Department & Joshua LaManna	101 N Forest Park Drive Payson, AZ 85541	101 N Forest Park Drive Payson, AZ 85541	$24.00			1
6/19/2012	6/20/2012	2012CV457-FD	Prudential Arizona Property Management c/o Cliff Potts	Beau Lootans Casey Brassick, & any & all occupants	Casey Brassick	$46.00	484006/3810	Payson Justice Court	0
		Summons & Complaint-Forcible Detainer	Beau Lootans Casey Brassick, & any & all occupants	107 E. McKamey Road Payson, AZ 85541	107 E McKamey St Payson, AZ 85541	$46.00			1
6/19/2012	6/21/2012	2012CV000458	Andrea Russo	Gregory Allen Ramstedt	Gregory Allen Ramstedt	$0.00		Payson Regional Justice Court	0
		Injunction Against Harassment (Fee Waived By Ct)	Gregory Allen Ramstedt	202 Airline Blvd Payson, AZ 85541	1401 N Beeline Hwy #B Payson, AZ 85541	$0.00			3
6/20/2012	6/20/2012	2012CV461-UN	Craig Miller	DeJo Goodman	DeJo Goodman	$40.00	484007	Payson Justice Court	0
		Notice & Summons	DeJo Goodman	556 N. Mountain View Road Star Valley, AZ 85541	108 w main Payson, AZ 85541	$40.00			1
6/21/2012	6/22/2012	2012CV468-FD	Star Valley Investments/Roy Haught	Lidia Fink	Posted	$46.00	484008/14263	Payson Justice Court	0
		Summons & Complaint-Forcible Detainer	Lidia Fink	3696 E AZ Hwy 260 A-12 Star Valley, AZ 85541	3696 E AZ Hwy 260 A-12 Star Valley, AZ 85541	$46.00			1
6/21/2012	6/22/2012	2012CV469-SC	Joy Richards	Robert Lantry	Robert Lantry	$40.00	484009	Payson Justice Court	0
		Notice & Summons	Robert Lantry	Post Net 1000 N. Beeline Highway Payson, AZ 85541	Post Net 1000 N. Beeline Highway Payson, AZ 85541	$40.00			1
6/25/2012	6/25/2012	2012000474FD	Rick Sexton	Joni Lea Alexander	Joni Lea Alexander	$46.00	484010	Payson Justice Court	0
		Summons & Complaint-Forcible Detainer	Joni Lea Alexander	109 E McKamey #1 Payson, AZ 85541	109 E McKamey #1 Payson, AZ 85541	$46.00			1
6/26/2012	6/27/2012	2012CV470-FD	Frontier Village Partners, LLC dba Aspen Cove Condominiums	Tobert Pilcher; Taylor Pilcher John and Jane Does I-X	Robert Pilcher	$46.00	484011/20175	Payson Justice Court	0
		Summons & Complaint-Forcible Detainer	Tobert Pilcher; Taylor Pilcher John and Jane Does I-X	801 E Frontier Street Unit #5 Payson, AZ 85541	801 E Frontier Street Unit 5 Payson, AZ 85541	$46.00			1

PAYSON REGIONAL CONSTABLE

Colt White

108 West Main Street Payson, Arizona 85541

Payson Regional Constable's Office,
Payson Regional
(928) 474-3844

ITEMIZED SERVICES by DATE RECEIVED

6/1/2012 TO 6/30/2012

Date: 7/3/2012

Date Received	Date Served	Case Number / Service	Plaintiff / Defendant	Person To Be Served / Address	Person Served / Address	Fees / Paid	Reference	Agency	Miles / Attempts
6/1/2012	6/6/2012	2012CR012210	State of Arizona	Garrett Lanyi	Garrett Lanyi	$0.00		Payson Magistrate Court	0
		Summons & Complaint	Garrett Lanyi	915 W. Annie's Way Payson, AZ 85541	915 W. Annie's Way Payson, AZ 85541	$0.00			3
6/1/2012	6/1/2012	2012TR012276	State of Arizona	Ellenja Hayes	Ellenja Hayes	$0.00		Payson Magistrate Court	0
		Summons & Complaint	Ellenja Hayes	700 E Juniper St Payson, AZ 85541	700 E Juniper St Payson, AZ 85541	$0.00			1
6/1/2012	6/4/2012	2012CR012211	State of Arizona	Timbur Hatch	Unserved	$0.00		Payson Magistrate Court	0
		Summons & Complaint	Timbur Hatch	132 S Rainbow Dr Star Valley, AZ 85541		$0.00			1
6/1/2012	6/1/2012	2012TR012275	State of Arizona	Steven Lemonier	Ellenja Hayes	$0.00		Payson Magistrate Court	0
		Summons & Complaint	Steven Lemonier	700 E Juniper St Payson, AZ 85541	700 E Juniper St Payson, AZ 85541	$0.00			1
6/1/2012	6/8/2012	2012TR012277	State of Arizona	Nancy Brown	Nancy Brown	$0.00		Payson Magistrate Court	0
		Summons & Complaint	Nancy Brown	809 E St Hwy 260 #101 Payson, AZ 85541	1001 S Beeline Payson, AZ 85541	$0.00			3
6/1/2012	6/7/2012	2012TR012281	State of Arizona	Darrin Lee Miles	Unserved	$0.00		Payson Magistrate Court	0
		Summons	Darrin Lee Miles	1213 N Carefree Circle Payson, AZ 85541		$0.00			3
6/4/2012	6/4/2012	2012CV000422	Rena Rickman	Marvin Soto	Marvin Soto	$0.00		Payson Regional Justice Court	0
		Order Of Protection	Marvin Soto	1100 South Street Globe, AZ 85502	1100 South Street Globe, AZ 85502	$0.00			1
6/4/2012	6/4/2012	2012CV000424	Christian Wrathall	Melissa Dawn Devaney	Melissa Dawn Devaney	$0.00		Payson Regional Justice Court	0
		Order Of Protection	Melissa Dawn Devaney	805 W Longhorn #2 Payson, AZ 85541	Community Bridges 803 W. Main Street Payson, AZ 85541	$0.00			1
6/4/2012	6/8/2012	2012CR012217	State of Arizona	Richard Thiele	Mariha Florence	$0.00		Payson Magistrate Court	0
		Summons & Complaint	Richard Thiele	303 W. Wade Lane Payson, AZ 85541	114 W Elm Payson, AZ 85541	$0.00			3
6/4/2012	6/6/2012	CR2012-00073	State of Arizona	GCSO, Deputy D. Newman	GCSO Clipboard	$0.00		Superior Court Gila County	0
		Subpoena	Martin Luther Kumpe	108 W. Main Street Payson, AZ 85541	108 W. Main Street Payson, AZ 85541	$0.00			1

ITEMIZED SERVICES by DATE RECEIVED

6/1/2012 TO 6/30/2012

Date Received	Date Served	Case Number / Service	Plaintiff / Defendant	Person To Be Served / Address	Person Served / Address	Fees / Paid	Reference	Agency	Miles / Attempts
6/6/2012	6/8/2012	2012TR012233	State of Arizona	Payson Police Department, Ofc. Cadwell	PPD Clipboard	$0.00		Payson Magistrate Court	0
		Subpoena Trial Reset	Tiffney Taylor	303 N. Beeline Highway Payson, AZ 85541	303 N. Beeline Highway Payson, AZ 85541	$0.00			1
6/6/2012	6/8/2012	2012TR001345	State of Arizona	Department of Public Safety, Ofc. J.E. Oestmann	DPS Clipboard - Payson	$0.00		Payson Justice Court	0
		Subpoena	James Lesjak	Department of Public Safety-Payson Office ,	Payson DPS Office Payson, AZ 85541	$0.00			1
6/6/2012	6/8/2012	2012TR001443	State of Arizona	Department of Public Safety, Ofc. H. Thomason	DPS Clipboard - Payson	$0.00		Payson Justice Court	0
		Subpoena	Scott Moomaw	Department of Public Safety-Payson Office ,	Payson DPS Office Payson, AZ 85541	$0.00			1
6/7/2012	6/8/2012	CR2012-00073	State of Arizona	GCSO, Deputy L. Kerszykowski	GCSO Clipboard	$0.00		Superior Court Gila County	0
		Subpoena	Martin Luther Kumpe	108 W. Main Street Payson, AZ 85541	108 W. Main Street Payson, AZ 85541	$0.00			1
6/8/2012	6/8/2012	2012CV000441	Lori Anne Horn	James Chaney	James Chaney	$0.00		Payson Regional Justice Court	0
		Order Of Protection	James Chaney	198 S Rainbow Drive Star Valley, AZ 85541	198 S Rainbow Drive Star Valley, AZ 85541	$0.00			1
6/8/2012	6/11/2012	2012CR000294	State of Arizona	Matthew Blaine Shannon	Marilyn "Toots" Wright	$0.00		Payson Justice Court	0
		Summons & Complaint	Matthew Blaine Shannon	616 S Verde Place Payson, AZ 85541	616 S. Verde Place Beaver Valley, AZ 85541	$0.00			1
6/8/2012	6/11/2012	2012TR001658	State of Arizona	Irvin Vasquez-Tellez	Irvin Vasquez-Tellez	$0.00		Payson Justice Court	0
		Summons & Complaint	Irvin Vasquez-Tellez	1604 N. Maverick Circle Payson, AZ 85541	1604 N. Maverick Circle Payson, AZ 85541	$0.00			1
6/8/2012	6/11/2012	JV2011-127 Petition 2012-1	State of Arizona	[redacted] minor c/o Michelle Kieffer, mother	Unserved	$0.00		Juvenile Court Gila County	0
		Notice To Appear; Petition	[redacted] minor	1308 W Ft McDonald Circle Payson, AZ 85541		$0.00			3
6/8/2012	6/11/2012	JV2012-00065 Petition 2012-1	State of Arizona	[redacted] minor c/o Bobbi Lucchesi, mother	Bobbi Lucchesi	$0.00		Juvenile Court Gila County	0
		Notice To Appear; Petition	[redacted] minor	79 N Mayfield Canyon Rd Lot 64 Star Valley, AZ 85541	79 Mayfield Canyon Rd Star Valley, AZ 85541	$0.00			1
6/8/2012	6/11/2012	JV2012-00064 Petiton 2012-1	State of Arizona	[redacted] minor c/o Justin Schulz, father	Justin Schulz	$0.00		Juvenile Court Gila County	0
		Notice To Appear; Petition	[redacted] minor	72 Arena Drive Star Valley, AZ 85541	72 E. Arena Drive Star Valley, AZ 85541	$0.00			1
6/11/2012	6/11/2012	2012TR540	State of Arizona, et al	Steven Matheis	Sarah Matheis	$0.00		Payson Regional Justice Court	0
		Trial Notice	Steven Matheis	403 W Bridle Path Ln Payson, AZ 85541	403 W Bridle Path Ln Payson, AZ 85541	$0.00			1
6/11/2012	6/11/2012	2011TR3073	State of Arizona, et al	DPS Crime Lab, Mike Slonaker, Criminalist	DPS Clipboard - Payson	$0.00		Payson Regional Justice Court	0
		Subpoena	Brian Eric Dean	DPS Crim Lab- Phx,AZ ,	Payson DPS Office Payson, AZ 85541	$0.00			1
6/11/2012	6/11/2012	2011TR3073	State of Arizona, et al	Department of Public Safety, Ofc. H. Thomason	DPS Clipboard - Payson	$0.00		Payson Regional Justice Court	0
		Subpoena	Brian Eric Dean	DPS Clipboard-Payson ,	Payson DPS Office Payson, AZ 85541	$0.00			1

ITEMIZED SERVICES by DATE RECEIVED

6/1/2012 TO 6/30/2012

Date Received	Date Served	Case Number / Service	Plaintiff / Defendant	Person To Be Served / Address	Person Served / Address	Fees / Paid	Reference	Agency	Miles / Attempts
6/11/2012	6/12/2012	M-0444-TR-2012012301	Ross Hanes	Ross Hanes	Ross Hanes	$0.00		Payson Magistrate Court	0
		Summons	State of Arizona, et al	110 E. Aero Drive, #1 Payson, AZ 85541	1100 South Street Globe, AZ 85502	$0.00			1
6/11/2012	6/11/2012	2011TR3073	State of Arizona, et al	Department of Public Safety, Ofc. Montgomery	DPS Clipboard - Payson	$0.00		Payson Regional Justice Court	0
		Subpoena	Brian Eric Dean	Department of Public Safety Payson, AZ 85541	Payson DPS Office Payson, AZ 85541	$0.00			1
6/12/2012	6/13/2012	2012TR12110	State of Arizona, et al	[redacted] minor c/o Kim Beasley & Darrell Beasley, parents	CPS Specialist III, Kristan Martinez	$0.00		Payson Regional Justice Court	0
		Order To Show Cause	[redacted] minor c/o Kim Beasley & Darrell Beasley, parents	108 N. Lakeshore Drive Payson, AZ 85541	300 W Longhorn Payson, AZ 85541	$0.00			2
6/13/2012	6/15/2012	CR2012-00255	State of Arizona, et al	Cortney Robert Charon	Unserved	$0.00		Gila County Superior Court	0
		Summons	Cortney Robert Charon	121 E Aero Payson, AZ 85541		$0.00			3
6/13/2012	6/15/2012	M-0444-TR-2012012257	State of Arizona, et al	Payson Police Department, Ofc. M. Zimmerman	PPD Clipboard	$0.00		Payson Magistrate Court	0
		Subpoena	Steven Judy	303 N. Beeline Highway Payson, AZ 85541	303 N. Beeline Highway Payson, AZ 85541	$0.00			1
6/13/2012	6/15/2012	M-0444-TR-2012012294	State of Arizona, et al	Payson Police Department, Ofc. M. Hansen	PPD Clipboard	$0.00		Payson Magistrate Court	0
		Subpoena	Christal Dimmick	303 N. Beeline Highway Payson, AZ 85541	303 N. Beeline Highway Payson, AZ 85541	$0.00			1
6/13/2012	6/15/2012	J-0404-TR-2012001345	State of Arizona, et al	Department of Public Safety, Ofc. J.E. Oestmann	DPS Clipboard - Payson	$0.00		Payson Regional Justice Court	0
		Subpoena Trial Reset	James Lesjak	Department of Public Safety-Payson Office ,	Payson DPS Office Payson, AZ 85541	$0.00			1
6/13/2012	6/15/2012	J-0404-TR-2012001443	State of Arizona, et al	Department of Public Safety, Ofc. H. Thomason	DPS Clipboard - Payson	$0.00		Payson Regional Justice Court	0
		Subpoena Trial Reset	Scott Moomaw	DPS Clipboard-Payson ,	Payson DPS Office Payson, AZ 85541	$0.00			1
6/14/2012	6/15/2012	2012CV446-FD	Robert G. Coar, dba Twin Lakes MHP	Payson Police Department, Ofc. D. Tanner	PPD Clipboard	$0.00		Payson Regional Justice Court	0
		Subpoena	Debra Harris	303 N. Beeline Highway Payson, AZ 85541	303 N. Beeline Highway Payson, AZ 85541	$0.00			1
6/14/2012	6/15/2012	2012CV446-FD	Robert G. Coar, dba Twin Lakes MHP	Payson Police Department, Chief Don Engler	PPD Clipboard	$0.00		Payson Regional Justice Court	0
		Subpoena	Debra Harris	303 N. Beeline Highway Payson, AZ 85541	303 N. Beeline Highway Payson, AZ 85541	$0.00			1
6/14/2012	6/15/2012	2012CV446-FD	Robert G. Coar, dba Twin Lakes MHP	Payson Police Department, SGT. D. Faust	PPD Clipboard	$0.00		Payson Regional Justice Court	0
		Subpoena	Debra Harris	303 N. Beeline Highway Payson, AZ 85541	303 N. Beeline Highway Payson, AZ 85541	$0.00			1
6/15/2012	6/15/2012	J-404-CV-2012000453	Terrice "Terri" Kennedy	Dennis Moore	Dennis Moore	$0.00		Payson Regional Justice Court	0
		Order Of Protection	Dennis Moore	108 W Main Payson, AZ 85541	108 W Main Payson, AZ 85541	$0.00			1

ITEMIZED SERVICES by DATE RECEIVED

6/1/2012 TO 6/30/2012

Date Received	Date Served	Case Number / Service	Plaintiff / Defendant	Person To Be Served / Address	Person Served / Address	Fees / Paid	Reference	Agency	Miles / Attempts
6/15/2012	6/15/2012	J-0404-CR-2012000307	State of Arizona, et al	Tamera Lamb	Tamera Lamb	$0.00		Payson Regional Justice Court	0
		Summons & Complaint	Tamera Lamb	1117 N Karen Way Payson, AZ 85541	1117 N Karen Way Payson, AZ 85541	$0.00			1
6/15/2012	6/15/2012	J-0404-CR-2012000306	State of Arizona, et al	Sarah Michelle Ryan	Sarah Michelle Ryan	$0.00		Payson Regional Justice Court	0
		Summons & Complaint	Sarah Michelle Ryan	117 E Aero Dr Payson, AZ 85541	60 Hillside Drive Star Valley, AZ 85541	$0.00			1
6/15/2012	6/15/2012	CR2012-0032	State of Arizona, et al	Danny Lee Bob Middleton	Danny Lee Bob Middleton	$0.00		Gila County Superior Court	0
		Order To Appear	Danny Lee Bob Middleton	1100 S St Globe, AZ 85502	1100 S St Globe, AZ 85502	$0.00			1
6/18/2012	6/18/2012	2012CV000456	Helen White	George C Hicks	George C Hicks	$0.00		Payson Regional Justice Court	0
		Order Of Protection	George C Hicks	108 W Main Street Payson, AZ 85541	108 W Main Street Payson, AZ 85541	$0.00			1
6/18/2012	6/20/2012	2012TC012040	State of Arizona	Vanessa Chavez	Ilse Acosta	$0.00		Payson Magistrate Court	0
		Summons & Complaint	Vanessa Chavez	602 S Ponderosa Payson, AZ 85541	1107 S McLane #22 Payson, AZ 85541	$0.00			2
6/18/2012	6/22/2012	2012TC012041	State of Arizona	Cassandra Elizabeth Stage	Cassandra Elizabeth Stage	$0.00		Payson Magistrate Court	0
		Summons & Complaint	Cassandra Elizabeth Stage	300 W Frontier #12 Payson, AZ 85541	306 E. Chateau Circle Payson, AZ 85541	$0.00			4
6/18/2012	6/20/2012	2012TC012035	State of Arizona	Payson Library, Terry Morris	Payson Library, Terry Morris	$0.00		Payson Magistrate Court	0
		Subpoena	Casey Brassick	328 N. McLane Road Payson, AZ 85541	328 N. McLane Road Payson, AZ 85541	$0.00			1
6/18/2012	6/20/2012	2012TC012034	State of Arizona	Payson Library, Terry Morris	Payson Library, Terry Morris	$0.00		Payson Magistrate Court	0
		Subpoena	Lois Jones	328 N. McLane Road Payson, AZ 85541	328 N. McLane Road Payson, AZ 85541	$0.00			1
6/18/2012	6/20/2012	JV2011-127 Petition 2012-1	State of Arizona	[redacted] minor c/o Michelle Kieffer, mother	Michelle Kieffer	$0.00		Juvenile Court Gila County	0
		Notice To Appear; Petition	[redacted] minor	1308 W Ft McDonald Circle Payson, AZ 85541	200 W Frontier STE 6 Payson, AZ 85541	$0.00			2
6/20/2012	6/22/2012	2012CV000460	Shawnee Bayer	Mitchell Owens	Mitchell Owens	$0.00		Payson Regional Justice Court	0
		Order Of Protection	Mitchell Owens	108 W Main Street Payson, AZ 85541	108 W Main Street Payson, AZ 85541	$0.00			1
6/20/2012	6/22/2012	2012CV000459	Sharon Owens	Mitchell Owens	Mitchell Owens	$0.00		Payson Regional Justice Court	0
		Order Of Protection	Mitchell Owens	108 W Main Street Payson, AZ 85541	108 W Main Street Payson, AZ 85541	$0.00			1
6/20/2012	6/22/2012	2012CV000462	Kelly Owens	Mitchell Owens	Mitchell Owens	$0.00		Payson Regional Justice Court	0
		Order Of Protection	Mitchell Owens	108 W Main Street Payson, AZ 85541	108 W Main Street Payson, AZ 85541	$0.00			1
6/20/2012	6/20/2012	2012CV000463	Anne Arlene Glissendorf	Steven Eric Glissendorf	Steven Eric Glissendorf	$0.00		Payson Regional Justice Court	0
		Order Of Protection	Steven Eric Glissendorf	Rim Country Furniture & Appliance 4305 E. Highway 260 Star Valley, AZ 85541	1001 W. Gold Nugget Lane Payson, AZ 85541	$0.00			2

ITEMIZED SERVICES by DATE RECEIVED

6/1/2012 TO 6/30/2012

Date Received	Date Served	Case Number / Service	Plaintiff / Defendant	Person To Be Served / Address	Person Served / Address	Fees / Paid	Reference	Agency	Miles / Attempts
6/20/2012	6/20/2012	2012CV000464	Jordan Ross	Anthony Pepera	Anthony Pepera	$0.00		Payson Regional Justice Court	0
		Order Of Protection	Anthony Pepera	807 W. Colt Drive Payson, AZ 85541	807 W. Colt Drive Payson, AZ 85541	$0.00			1
6/21/2012		2012DR012238	State of Arizona	Mathew McRae		$0.00		Payson Magistrate Court	0
		Summons & Complaint	Mathew McRae	9829 Fossil Creek Rd Strawberry, AZ 85544		$0.00			0
6/21/2012		2012CR012237	State of Arizona	Mathew McRae		$0.00		Payson Magistrate Court	0
		Summons & Complaint	Mathew McRae	9829 Fossil Creek Rd Strawberry, AZ 85544		$0.00			0
6/22/2012	6/22/2012	2012CV000471	Nikki Laurien Small	Steven Dewayne Nard	Steven Dewayne Nard	$0.00		Payson Regional Justice Court	0
		Order Of Protection	Steven Dewayne Nard	1100 South Street Globe, AZ 85501	1100 South Street Globe, AZ 85501	$0.00			1
6/22/2012	6/25/2012	2012CR12105	State of Arizona	Dianna R. Haas	Dianna R. Haas	$0.00		Payson Magistrate Court	0
		Subpoena	Rusty Lee Brooner	912 S. Ponderosa Apt. A Payson, AZ 85541	108 W Main Street Payson, AZ 85541	$0.00			2
6/25/2012	6/25/2012	2012CV000476	Leetta Steward	Frankie Stiner	Frankie Stiner	$0.00		Payson Regional Justice Court	0
		Order Of Protection	Frankie Stiner	217 W. Saddle Lane Payson, AZ 85541	1210 N Hwy 87 Payson, AZ 85541	$0.00			4
6/25/2012	6/25/2012	2012CV000478	Dianna R. Haas	Rusty Lee Brooner	Rusty Lee Brooner	$0.00		Payson Regional Justice Court	0
		Order Of Protection	Rusty Lee Brooner	209 S. Ponderosa Street, #13 Payson, AZ 85541	209 S. Ponderosa Street, #13 Payson, AZ 85541	$0.00			1
6/26/2012	6/27/2012	2012CR000311	State of Arizona	GCSO, Jacob Delecki	GCSO Clipboard	$0.00		Payson Justice Court	0
		Subpoena	Rock Smith	108 W Main Street Payson, AZ 85541	108 W. Main Street Payson, AZ 85541	$0.00			1
6/26/2012	6/27/2012	2012TR001443	State of Arizona	Department of Public Safety, Ofc. H. Thomason	DPS Clipboard - Payson	$0.00		Payson Justice Court	0
		Subpoena Trial Reset	Scott Moomaw	Department of Public Safety-Payson Office ,	Payson DPS Office Payson, AZ 85541	$0.00			1
6/26/2012	6/27/2012	2012CR000305	State of Arizona	John Clemonds	John Clemonds	$0.00		Payson Justice Court	0
		Summons & Complaint	John Clemonds	117 E Aero Drive Payson, AZ 85541	60 S Hillside Drive Star Valley, AZ 85541	$0.00			3
6/27/2012	6/27/2012	2012CV000481	Eduardo Zermeno	Stephanie Marie Talamante	Stephanie Marie Talamante	$0.00		Payson Regional Justice Court	0
		Order Of Protection	Stephanie Marie Talamante	620 E Hwy 260 Payson, AZ 85541	108 W Main Street Payson, AZ 85541	$0.00			1
6/27/2012	6/27/2012	2012CV000485	Stephanie Marie Talamante	Eduardo Zermeno	Eduardo Zermeno	$0.00		Payson Regional Justice Court	0
		Order Of Protection	Eduardo Zermeno	600 E Hwy 260 Payson, AZ 85541	600 E Hwy 260 Payson, AZ 85541	$0.00			1
6/28/2012	7/2/2012	2012CR12196	State of Arizona	Maegan Campbell	Willis Campbell	$0.00		Payson Magistrate Court	0
		Order To Show Cause	Maegan Campbell	502 E Lorene St Payson, AZ 85541	502 E Lorene St Payson, AZ 85541	$0.00			1
6/28/2012		CR2012-00277	State of Arizona	Andrew Kevin Shannon		$0.00		Superior Court Gila County	0
		Summons	Andrew Kevin Shannon	616 S. Verde Place, #4, Lot 7 Beaver Valley, AZ 85541		$0.00			0

ITEMIZED SERVICES by DATE RECEIVED

6/1/2012 TO 6/30/2012

Date Received	Date Served	Case Number / Service	Plaintiff / Defendant	Person To Be Served / Address	Person Served / Address	Fees / Paid	Reference	Agency	Miles / Attempts
6/28/2012		CR2012-00270	State of Arizona	Matthew Blaine Shannon		$0.00		Superior Court Gila County	0
		Summons	Matthew Blaine Shannon	616 S Verde Place Payson, AZ 85541		$0.00			0
6/28/2012		CR2012-00271	State of Arizona	Matthew Blaine Shannon		$0.00		Superior Court Gila County	0
		Summons	Matthew Blaine Shannon	616 S Verde Place Payson, AZ 85541		$0.00			0
6/28/2012		CR2012-00272	State of Arizona	Matthew Blaine Shannon		$0.00		Superior Court Gila County	0
		Summons	Matthew Blaine Shannon	616 S Verde Place Payson, AZ 85541		$0.00			0
6/28/2012		CR2012-00273	State of Arizona	Matthew Blaine Shannon		$0.00		Superior Court Gila County	0
		Summons	Matthew Blaine Shannon	616 S Verde Place Payson, AZ 85541		$0.00			0
6/29/2012		69HI-JV-12-109	State of Minnesota, St. Louis County District Court Sixth District	Matthew Broadrick		$0.00		District Court-6th District St. Louis County, MN	0
		Notice Of Hearing	Matthew Broadrick	1209 East Christopher Creek Loop Payson, AZ 85541		$0.00			0

MILEAGE FOR THE MONTH June 2012

DATE	MILES DRIVEN BY B-185		MILES DRIVEN BY B-12	
6/1	31		122	
6/4			56	
6/5				
6/6			68	
6/7				
6/8			50	
6/11	35		58	
6/12	32			
6/13	36		49	
6/14	40			
6/15	30		71	
6/18			81	
6/19				
6/20			27	
6/21	35			
6/22	46		72	
6/25	35		36	
6/26				
6/27			24	
6/28	30			
6/29	68			
DAYS	**418**		**714**	

Total Miles Driven By The Constable's Office **1132** **June** **2012**

GILA COUNTY TREASURER'S RECEIPT
GILA COUNTY, ARIZONA

DATE 7/3/12

GRANT #

DEPOSIT TO FUND Gila County Treasurer FUND #

REMITTING DEPT Payson Regional Constable's Office

SERVICE RENDERED Service fees collected for the month of June 2012

Account Code	Revenue Description	Amount	
1005-324-3405.80	Service fees collected	1081	00
X1005-01-32400-4614	6/1/12 thru 6/30/12		
		1081	00

Authorized Signature 3270 Title PRCO #324

SUMMARY OF DEPOSIT

Currency	
Coins	
Checks	
Total	

TREASURER By Date

TREASURER

98340

PAYSON CONSTABLE
108 W. MAIN ST. 928-474-3844
PAYSON, AZ 85541

2294
91-527/1221 6128
0703680454

DATE 7/3/12

PAY TO THE ORDER OF Gila County Treasurer $ 1081.00

One thousand Eighty-One dollars & 00/100's DOLLARS

Security Features Details on Back

WELLS FARGO Wells Fargo Bank, N.A. Arizona wellsfargo.com

FOR Service Fees - June 2012 3270 MP

⑈0000002294⑈ ⑆122105278⑆ 0703680454⑈

ARF-1373 **4- T**

Regular BOS Meeting

Meeting Date: 08/07/2012

Reporting Period: Payson Regional Constable's Annual Report for Fiscal Year 2011-2012

Submitted For: Colt White

Submitted By: Michelle Keegan, Administrative Clerk Senior, Constable - Payson

---

Information

Subject

Payson Regional Constable's Annual Report for Fiscal Year 2011-2012

Suggested Motion

Approval of the fiscal year 2011-2012 annual activity report submitted by the Payson Regional Constable.

Attachments

Payson Regional Constable's Office Annual Report Fiscal Year 2011-2012

David Vaughn
Deputy Constable

Michelle Keegan
Clerk of the Constable

Office of
Payson Regional Constable
Colt White

Fiscal Year 2011-2012
ANNUAL REPORT

TABLE OF CONTENTS

COVER LETTER

MONTHLY COMPARISON SHEET

SERVICE SUMMARY REPORT

108 WEST MAIN STREET, PAYSON, AZ 85541 – PHONE: (928) 474-3844/FAX: (928) 468-1509

PAYSON REGIONAL CONSTABLE
COLT WHITE

July 5, 2012

GILA COUNTY BOARD OF SUPERVISORS
1400 East Ash Street
Globe, Arizona 85501

Dear Sirs and Madams:

The Payson Regional Constable's Office has prepared its Fiscal Year 2011-2012 Annual Report for your review. This Report includes the statistics for 2011-2012, as well as a two year comparison which includes the 2010-2011 totals.

Service fees collected in fiscal year 2011-2012 decreased by **34.30%** from that of fiscal year 2010-2011, while the volume of papers received decreased by **18.80%**. Miles driven also decreased by **3.84%** from that of 2010-2011.

The decrease in the number of received papers to serve this fiscal year, we believe, is tied to the economic turndown.

Respectfully submitted,

Colt White
Payson Regional Constable

MDK/chw

108 WEST MAIN STREET, PAYSON, AZ 85541 – PHONE: (928) 474-3844-FAX: (928) 468-1509

CONSTABLE OFFICE STATISTICS COMPARISONS
MONTHLY TOTALS BY FISCAL YEAR 2010-2011 & 2011-2012

2010-2011 MONTH	TOTAL PAPERS	MILES DRIVEN	FEES COLLECTED	2011-2012 MONTH	TOTAL PAPERS	MILES DRIVEN	FEES COLLECTED
2010				2011			
JULY	227	1,574	$3,866.70	JULY	133	1,193	$2,708.00
AUGUST	175	1,938	$3,062.90	AUGUST	159	1,886	$2,193.28
SEPTEMBER	150	2,010	$2,702.90	SEPTEMBER	217	1,805	$2,410.45
OCTOBER	207	2,367	$2,507.40	OCTOBER	166	1,766	$2,668.20
NOVEMBER	182	1,867	$3,554.60	NOVEMBER	148	2,183	$2,018.40
DECEMBER	206	2,258	$2,770.85	DECEMBER	170	2,330	$2,100.70
JANUARY2011	194	1,885	$3,337.42	JANUARY 2012	166	2,335	$2,746.10
FEBRUARY	183	1,519	$3,123.40	FEBRUARY 2012	107	1,704	$1,674.50
MARCH	218	2,000	$5,122.25	MARCH	142	1,680	$1,539.70
APRIL	132	1,657	$2,784.76	APRIL	142	1,750	$2,545.05
MAY	153	1,681	$2,984.40	MAY	130	1,766	$1,803.05
JUNE	159	1,634	$2,697.00	JUNE	95	1,132	$1,076.00
COMPARISON TOTAL	2,186	22,390	$38,514.58	COMPARISON TOTAL	1,775	21,530	$25,483.43
				Difference	-411	-860	-$13,031.15
2011				2012			
YEAR TOTAL:	2,186	22,390	$38,514.58	YEAR TOTAL:	1,775	21,530	$25,483.43

Rev.080211

Note: Fees Collected column amounts do not include the $875.00 per month received from the Town of Payson per contract.

PAYSON REGIONAL CONSTABLE

Colt White
108 West Main Street Payson, Arizona 85541

Payson Regional Constable's Office,
Payson Regional
(928) 474-3844

GENERAL CERTIFICATE of SERVICE
SERVICE SUMMARY REPORT - by DATE SERVED

7/1/2011 TO 6/30/2012

Number of Cases	Description
2	10 Day Notice to Vacate (Fee)
2	30 Day Rental Notice (Fee)
2	5 Day Notice To Pay Or Quit (Fee)
2	5 Day Notice To Pay Rent Or Quit (Fee)
2	5 Day Notice To Vacate (Fee)
1	Cease And Desist Notification (Fee)
13	Civil Complaint (Fee)
2	Complaint & Summons (Fee)
10	Complaint/Summons/Answer (Fee)
2	Counterclaim (Fee)
1	Default (Fee)
1	Dependency Petition; Notice Of Hearing & Temporary Order (Fee)
1	Five Day Rental Notice (Fee)
2	Guardianship/Conservatorship Petition (Fee)
28	Injunction Against Harassment (Fee Waived By Ct) (Fee)

GENERAL CERTIFICATE of SERVICE

SERVICE SUMMARY REPORT - by DATE SERVED

7/1/2011 TO 6/30/2012

Number of Cases	Description
79	Injunction Against Harassment (Fee)
1	Injunction Against Workplace Harassment (Fee)
2	Letter (Fee)
1	Minute Entry (Fee)
1	Motion (Fee)
1	Motion To Modify Custody, Support & Parenting Plan; Motion For Temporary Orders (Fee)
2	Notice & Summons (Fee)
6	Notice of Claim (Fee)
1	Notice Of Demand For Possession Letter (Fee)
3	Notice Of Hearing (Fee)
1	Notice Of Hearing Prior To Injunction Against Harassment (Fee)
1	Notice of Intent (Fee)
2	Notice Of Trustee's Sale (Fee)
2	Notice Requiring Delivery Of Possession Of Premises (Fee)
3	Notice To Vacate (Fee)
1	Order (Fee)
3	Order To Appear (Fee)
4	Order To Appear For Supplemental Proceedings (Fee)
1	Order To Appear; Petition For Modification Of Child Support, Visitation (Fee)
1	Order To Appear; Petition To Enforce (Fee)
2	Order To Appear; Petition To Modify Child Support Order (Fee)
1	Petition For Appointment of Guardian & Conservator; Notice Of Hearing; Order (Fee)
7	Petition For Dissolution Of Marriage w/o Minor Children (Divorce) (Fee)
4	Petition For Dissolution Of Marriage-w/Minor Children (Divorce) (Fee)

GENERAL CERTIFICATE of SERVICE

SERVICE SUMMARY REPORT - by DATE SERVED

7/1/2011 TO 6/30/2012

Number of Cases	Description
1	Petition For Granparents Visitation (Fee)
1	Petition For Legal Separation w/Minor Children (Fee)
1	Petition For Modification Of Parenting Time; Order To Appear (Fee)
1	Petition For Order To Appear; Order To Appear (Fee)
1	Petition For Order To Show Cause & Order To Appear (Fee)
1	Petition In Support Of Supplemental Proceedings And Order (Fee)
1	Petition To Enforce Divorce Decree (Fee)
1	Petition To Establish Child Custody & Parenting Time (Fee)
3	Petition To Establish Child Custody, Parenting Time & Child Support (Fee)
5	Petition To Modify Child Custody, Parenting Time & Child Support (Fee)
1	Petition To Modify Child Support Order (Simplified Process) (Fee)
1	Response To Petition For Dissolution Of A Non-Covenant Marriage w/Minor Children (Fee)
5	Subpoena (Fee)
2	Subpoena Duces Tecum (Fee)
5	Subpoena Duces Tecum; Notice Of Deposition (Fee)
2	Subpoena; Notice Of Deposition (Fee)
117	Summons & Complaint (Fee)
7	Summons & Complaint Contract (Fee)
4	Summons & Complaint for Dissolution of Marriage (Fee)
32	Summons & Complaint; Certificate Of Compulsory Arbitration (Fee)
3	Summons & Complaint; Certificate of Compulsory Arbitration; Affidavit; Request For Trial (Fee)
98	Summons & Complaint-Forcible Detainer (Fee)
2	Summons & Petition For Dissolution Of A Covenant Marriage (Fee)
3	Summons & Petition To Establish Child Custody and Parenting Time (Fee)

GENERAL CERTIFICATE of SERVICE

SERVICE SUMMARY REPORT - by DATE SERVED

7/1/2011 TO 6/30/2012

Number of Cases	Description
4	Summons (Fee)
2	Writ Of Execution (Fee)
1	Writ Of Execution-General (Fee)
9	Writ Of Garnishment (Earnings) & Summons (Fee)
13	Writ Of Garnishment (Non-Earnings) & Summons (Fee)
11	Writ Of Restitution (Fee)
1	Amended Notice To Appear
3	Amended Order of Protection
2	Civil Citation
1	Hearing Order for Injunction Against Harassment
1	Injunction Against Harassment
1	Judgment
1	Notice Of Hearing
4	Notice Of Hearing Prior To Injunction Against Harassment
2	Notice Of Violation/Summon & Complaint
4	Notice of Violation-Request For Voluntary Compliance
93	Notice To Appear; Petition
143	Order Of Protection
1	Order To Appear
11	Order To Show Cause
1	Sentencing
1	Status Hearing Subpoena
707	Subpoena
24	Subpoena Trial Reset

GENERAL CERTIFICATE of SERVICE
SERVICE SUMMARY REPORT - by DATE SERVED

7/1/2011 TO 6/30/2012

Number of Cases	Description
96	Summons
166	Summons & Complaint
2	Summons Focible Detainer
1	Trial Notice
1	Zoning Violation

Total Number of Fee Services	539
Total Number of Non Fee Services	1267
Total Number of Services	1806

ARF-1374 **4- U**

Regular BOS Meeting

Meeting Date: 08/07/2012

Reporting Period: Globe Regional Justice Court Monthly Report for June 2012

Submitted For: Mary Navarro

Submitted By: Mary Navarro, Justice Court Operations Mgr, Superior Court

---

Information

Subject

Globe Regional Justice Court Monthly Report for June 2012

Suggested Motion

Approval of the June 2012 monthly activity report submitted by the Globe Regional Justice Court.

Attachments

Globe Regional Justice Court Montly Report for 06/12

GLOBE JUSTICE COURT TREASURER'S RECAP FY2012

JUNE, 2012 FUND NAME	AZTEC CODE	ACCOUNT CODE	ACCOUNT CODE	TOTAL AMOUNT ALLOCATED	5% FILL THE GAP SET ASIDE	ADJUSTED BALANCE
Bulk Merchandise Civil Penalty	ZBULK		STATE	$ -	$ -	$ -
Child Passenger Restraint	ZCPRF		STATE	$ 43.52	$ 2.18	$ 41.34
Drug and Gang Enforcement Fines	ZDECJ		STATE	$ 2,391.83	$ 119.60	$ 2,272.23
Domestic Violence Shelter Fund	ZDVSF		STATE	$ -	$ -	$ -
FARE Special Collection Fee 19%	ZFAR1		STATE	$ 2,787.70		$ 2,787.70
FARE Delinquency Fee $35.00	ZFAR2		STATE	$ 3,597.93		$ 3,597.93
Game and Fish - Wildlife	ZGF		STATE	$ 99.67	$ 4.99	$ 94.68
Extra DUI Assessment $500	ZGFDU		STATE	$ 4,669.26	$ 233.47	$ 4,435.79
HURF 1 28-5438, 2533C	ZHRF1		STATE	$ 26.50	$ 1.33	$ 25.17
HURF 3 28-5433C, 4139	ZHRF3		STATE	$ 57.06	$ 2.86	$ 54.20
HURF - to DPS	ZHRFD		STATE	$ 14.26	$ 0.72	$ 13.54
Registrar of Contractors	ZRCA		STATE	$ -	$ -	$ -
Display Suspended Plates (DPS)	ZSLPD		STATE	$ 59.21	$ 2.97	$ 56.24
State Photo Enforcement Base Fine	ZSPBF		STATE	$ -	$ -	$ -
State Photo Enforcement Clean Election Surcharge	ZSPCE		STATE	$ -	$ -	$ -
Alternative Dispute Resolution	ZADR		T848-2061	$ 35.07	$ 1.76	$ 33.31
Arson Detection Reward Fund 41-2167D	ZADRF		T901-2061	$ -	$ -	$ -
Confidential Address Assessment - State Treasurer	ZCAA1			$ -	$ -	$ -
Confidential Address Assessment - Local	ZCAA2			$ -	$ -	$ -
Citizens Clean Elections	ZCEF		T888-2061	$ 2,123.84		$ 2,123.84
Criminal Justice Enhancement 67%	ZCJEF		T812-2061	$ 10,770.09	$ 538.51	$ 10,231.58
Defensive Driving Diversion Fee	ZDDS	1005.311-3510.10	X105-4831	$ 2,030.00	$ 101.50	$ 1,928.50
DNA State Surcharge 3% 12-116.01C	ZDNAS		T872-2061	$ 1,179.74	$ 58.99	$ 1,120.75
DUI Abatement	ZDUIA		T889-2061	$ 25.00	$ 1.25	$ 23.75
Elected Officials Retirement Fund 15.30%	ZEORF		T801-2061	$ 262.01	$ 13.11	$ 248.90
Extra Adult Probation Assessment	ZEXAP	4042.335-3405.30	X25001335-4835	$ 37.96	$ 1.90	$ 36.06
Base Fees (General Fund)	ZFEE	1005.311-3400.15	X105-4615	$ 814.74	$ 40.74	$ 774.00
Forensic Investigation Fund	ZFIF			$ -	$ -	$ -
Base Fines (General Fund)	ZFINE	1005.311-3510.10	X105-4831	$ 21,129.74	$ 1,056.49	$ 20,073.25
Fill the Gap Surcharge 7%	ZFTGS		T870-2061	$ 1,472.95	$ 73.65	$ 1,399.30
Failure To Pay Warrant Surcharge 10%	ZFTPS	1005.311.3400.17	X10501311-4861	$ 288.77	$ 14.44	$ 274.33
HURF - to Sheriff's Office 28-5533G	ZHRFS	1005.300-3400.15	X1050234-4615	$ -	$ -	$ -
Judicial Collection Enhancement $7	ZJCL	4740.311-3400.15	X357-4615	$ 862.95		$ 862.95
Judicial Collection Enhancement Local %	ZJCLF	1005.311-3400.15	X105-4615	$ 116.55	$ 5.83	$ 110.72
Judicial Collection Enhancement $13	ZJCS		T840-2061	$ 1,612.62		$ 1,612.62
Judicial Collection Enhancement %PC	ZJCSF		T840-2061	$ 266.73	$ 13.34	$ 253.39
Jail (Incarceration) Fees	ZJF	1005.300-3405.40	X10502442-4651	$ 2,213.04		$ 2,213.04
Local Costs	ZLCL1-5	1005.311-3400.10	X105-4450	$ 473.60	$ 23.68	$ 449.92
Cost of Prosecution Reimbursement 60%	ZLCL6	3544.301-3360.50	X182-4620	$ 84.23		$ 84.23
Cost of Prosecution Reimbursement 40%	ZLCL6	4574.333-3400.16	X22601333-4864	$ 56.15		$ 56.15
County Attorney Bad Check Program	ZLCL7	3545.301-3360.50	X183-4620	$ 592.69	$ 29.64	$ 563.05
Miscellaneous Fees - Local	ZMISC	1005.311-3400.15	X105-4615	$ 216.90	$ 10.85	$ 206.05
Medical Services Enhancement 13%	ZMSEF		T813-2061	$ 2,978.95	$ 148.95	$ 2,830.00
2011 Additional Assessment - State Treasurer	ZOS1		T930-2061	$ 2,506.58	$ 125.33	$ 2,381.25
2011 Additional Assessment - County Treasurer	ZOS2		T931-2061	$ 313.28	$ 15.67	$ 297.61
Officer Safety Equipment - City Police - Globe (CP)	ZOS3		T932-2061	$ 45.92	$ 2.30	$ 43.62
Officer Safety Equipment - Sheriff (SHF)	ZOS4		T933-2061	$ 84.18	$ 4.21	$ 79.97
Officer Safety Equipment - DPS (DPS)	ZOS5		T934-2061	$ 1,099.73	$ 54.99	$ 1,044.74
Officer Safety Equipment - MVD/ADOT (MVD)	ZOS6		T935-2061	$ -	$ -	$ -
Officer Safety Equipment - Game and Fish (GF)	ZOS7		T936-2061	$ 19.64	$ 0.99	$ 18.65
Officer Safety - Registrar of Contractors (ROFC)	ZOS8		T937-2061	$ -	$ -	$ -
Officer Safety Equipment - Globe Fire (FD)	ZOS13		T938-2061	$ -	$ -	$ -
Arizona Department of Insurance (ADOI)	ZOS15		T939-2061	$ -	$ -	$ -
Officer Safety Equipment - Miami Police Dept. (MPD)	ZOS16		T940-2061	$ 4.00	$ 0.20	$ 3.80
Health and Human Services (HHS)	ZOS17		T941-2061	$ -	$ -	$ -
Gila County Animal Control (R)	ZOS18		T942-2061	$ -	$ -	$ -
Officer Safety - San Carlos Tribal Police (SCPD)	ZOS19		T943-2061	$ -	$ -	$ -
TriCity Fire Department (TRIFI)	ZOS20		T944-2061	$ -	$ -	$ -
San Carlos Game and Fish (SCGF)	ZOS23		T945-2061	$ -	$ -	$ -
Officer Safety Equip. - Hayden Police Dept. (HPD)	ZOS24		T946-2061	$ -	$ -	$ -
Arizona Department of Liquor (ADL)	ZOS25		T947-2061	$ -	$ -	$ -
Overpayment Forfeited	ZOVF	1005.311.3510.10	X105-4831	$ 94.02	$ 4.71	$ 89.31
Adult Probation Fee	ZPBA	4042.335-3405.30	X25001335-4835	$ 535.53	$ 26.78	$ 508.75
Prison Construction Fund	ZPCOF		T908-2061	$ 4,627.51	$ 231.38	$ 4,396.13
Probation Surcharge 2006 ($10.00)	ZPRS6		T871-2061	$ 267.37	$ 13.37	$ 254.00
Probation Surcharge 2009 ($20.00)	ZPRS9		T871-2061	$ 6,959.90	$ 348.00	$ 6,611.90
Probation Surcharge $5.00	ZPRSU		T871-2061	$ 124.54	$ 6.23	$ 118.31
Public Defender Fees	ZPUBZ	1005.345-3350.00	X105-4429	$ 403.05		$ 403.05
Reimbursement to County Attorney 60%	ZREIM	3544.301.3360.50	X182-4620	$ 3,813.72		$ 3,813.72
Reimbursement to County Attorney 40%	ZREIM	4574.333.3400.16	X22601333-4864	$ 2,542.47		$ 2,542.47
Security Enhancement Fee	ZSECE			$ -	$ -	$ -
State Highway Fund	ZSHWY			$ -	$ -	$ -
State Highway Work Zone Fund	ZSHWZ		T855-2061	$ -	$ -	$ -
Display Suspended Plates (Sheriff's Office)	ZSLPS	1005.300-3510.10	X105-4264	$ 10.94	$ 0.55	$ 10.39

GLOBE JUSTICE COURT TREASURER'S RECAP FY2012

JUNE, 2012 FUND NAME	AZTEC CODE	ACCOUNT CODE	ACCOUNT CODE	TOTAL AMOUNT ALLOCATED	5% FILL THE GAP SET ASIDE	ADJUSTED BALANCE
Victims Assistance Fund	ZVAF		T814-2061	$ -	$ -	$ -
Local Warrant Fee	ZWAR			$ -	$ -	$ -
DARE - Sheriff's Office	ZDASO		SHERIFF D.A.R.E	$ 40.00	$ 2.00	$ 38.00
HURF - to City Police	ZHRFC		CITY POLICE	$ -	$ -	$ -
Display Suspended Plates (City Police)	ZSLPC		CITY POLICE	$ 250.00	$ 12.50	$ 237.50
TOTALS				$ 87,133.64	$ 3,351.96	$ 83,781.68
			TOTAL ADJUSTED BALANCE VERIFICATION			$ 83,781.68
					TOTAL RESTITUTION RECEIVED	$ 3,906.64
					TOTAL RECEIPTS THIS MONTH	$ 91,040.28

DATE	CHECK NO.	AMOUNT	MONTHLY REMITTANCE TO:
7/6/2012	6598	$ 13,378.82	ARIZONA STATE TREASURER
7/6/2012	6599	$ 73,479.32	GILA COUNTY TREASURER
7/6/2012	6600	$ 38.00	GILA COUNTY SHERIFF D.A.R.E.
7/6/2012	6601	$ 237.50	CITY POLICE SUSPENDED PLATES
		$ 87,133.64	TOTAL DISTRIBUTIONS THIS MONTH

I, Gary Goetteman, Justice of the Peace for the Globe Regional Justice Court, do hereby certify that the foregoing is a true and correct account of funds collected by me for the month of JUNE, 2012. To the Best of my knowledge information and belief.

Justice of the Peace

Subscribed and Sworn to before me this 9th day of July, 2012.

Mary E. Mendez

Notary Public

My Commission Expires: 12-12-2015

MARY E. MENDEZ
Notary Public - State of Arizona
GILA COUNTY
My Commission Expires
December 12, 2015

GLOBE REGIONAL JUSTICE COURT
MONTHLY TRUST REPORT

For the Month of: June, 2012

BONDS

BALANCE AT THE BEGINNING OF THE MONTH	**$10,625.30**
RECEIVED DURING THE MONTH	**$11,846.20**
DISBURSED DURING THE MONTH	**$10,577.98**
BALANCE AT THE END OF THE MONTH	**$11,893.52**

Justice of the Peace

Court Manager

*Auditor General: Monthly trust report-summarize the courts bond and deposit transactions - although bond and deposit monies remain in the court bonds account, it must be included in financial reports – the report must be filed with the county disbursement and it must indicate beginning balances, deposits, withdrawals and balances due.

ARF-1381 **4- V**

Regular BOS Meeting

Meeting Date: 08/07/2012

Reporting Period: Payson Regional Justice of the Peace Monthly Report for June 2012

Submitted For: Dorothy Little

Submitted By: Dorothy Little, Justice of the Peace-Payson Region, Superior Court

---

Information

Subject

Payson Regional Justice of the Peace Monthly Report for June 2012

Suggested Motion

Approval of the June 2012 monthly activity report submitted by the Payson Regional Justice of the Peace.

Attachments

Payson Justice of the Peace Monthly Report for June 2012

PAYSON JUSTICE COURT TREASURER'S RECAP FY2012

JUNE, 2012 FUND NAME	AZTEC CODE	ACCOUNT CODE	ACCOUNT CODE	TOTAL AMOUNT ALLOCATED	5% FILL THE GAP SET ASIDE	ADJUSTED BALANCE
Alternative Dispute Resolution	ZADR	0848000-000-000-2061-00	T848-2061	$ 55.55	$ 2.78	$ 52.77
Arson Detection Reward Fund 41-2167D	ZADRF	0901000-000-000-2061-00	T901-2061	$ -	$ -	$ -
Attorney Fee Reimbursement	ZATT	1005000-314-000-3350-00	X10501314004383	$ 107.16		$ 107.16
Confidential Address Assessment - State Treasurer	ZCAA1			$ -	$ -	$ -
Confidential Address Assessment - Local	ZCAA2			$ -	$ -	$ -
Citizens Clean Elections	ZCEF	0888000-000-000-2061-00	T888-2061	$ 1,552.02		$ 1,552.02
Criminal Justice Enhancement 67%	ZCJEF	0812000-000-000-2061-00	T812-2061	$ 7,293.33	$ 364.67	$ 6,928.66
Defensive Driving Diversion Fee	ZDDS	1005000-314-000-3400-90	X105-4609	$ 4,410.00	$ 220.50	$ 4,189.50
DNA State Surcharge 3% 12-116.01C	ZDNAS	0872000-000-000-2061-00	T872-2061	$ 919.47	$ 45.97	$ 873.50
Elected Officials Retirement Fund 15.30%	ZEORF	0801000-000-000-2061-00	T801-2061	$ 415.15	$ 20.76	$ 394.39
Base Fees (General Fund)	ZFEE	1005000-314-000-3400-15	X105-4615	$ 1,222.11	$ 61.11	$ 1,161.00
Base Fines (General Fund)	ZFINE	1005000-314-000-3510-10	X105-4831	$ 14,078.04	$ 703.90	$ 13,374.14
Fill the Gap Surcharge 7%	ZFTGS	0870000-000-000-2061-00	T870-2061	$ 1,086.00	$ 54.30	$ 1,031.70
Failure To Pay Warrant Surcharge 10%	ZFTPS	1005000-314-000-3400-17	X10501314004861	$ 167.01	$ 8.35	$ 158.66
Extra DUI Assessment $500	ZGFDU	0912000-000-000-2061-00	T912-2061	$ 4,784.82	$ 239.24	$ 4,545.58
Judicial Collection Enhancement $7	ZJCL	4741000-314-000-3400-15	X36001314004615	$ 463.99		$ 463.99
Judicial Collection Enhancement Local %	ZJCLF	4741000-314-000-3400-15	X36001314004615	$ 184.65	$ 9.23	$ 175.42
Judicial Collection Enhancement $13	ZJCS	0818000-000-000-2061-00	T818-2061	$ 861.68		$ 861.68
Judicial Collection Enhancement %PC	ZJCSF	0840000-000-000-2061-00	T840-2061	$ 422.63	$ 21.13	$ 401.50
Jail (Incarceration) Fees	ZJF	1005000-300-340-3405-40	X10502340004651	$ 690.22		$ 690.22
Local Costs	ZLCL	1005000-314-000-3510-10	X105-4831	$ -	$ -	$ -
Administrative Costs	ZMISC	1005000-314-000-3400-99	X105-4886	$ 1,483.68	$ 74.18	$ 1,409.50
Medical Services Enhancement 13%	ZMSEF	0813000-000-000-2061-00	T813-2061	$ 2,017.29	$ 100.86	$ 1,916.43
2011 Additional Assessment - State Treasurer	ZOS1	0930000-000-000-2061-00		$ 1,869.67	$ 93.48	$ 1,776.19
2011 Additional Assessment - County Treasurer	ZOS2	0931000-000-000-2061-00		$ 233.72	$ 11.69	$ 222.03
Officer Safety Equipment - City Police (CP)	ZOS3	0932000-000-000-2061-00		$ 0.26	$ 0.01	$ 0.25
Officer Safety Equipment - Sheriff (SHF)	ZOS4	0933000-000-000-2061-00		$ 195.14	$ 9.76	$ 185.38
Officer Safety Equipment - DPS (DPS)	ZOS5	0934000-000-000-2061-00		$ 709.16	$ 35.46	$ 673.70
Officer Safety Equipment - MVD/ADOT (MVD)	ZOS6	0935000-000-000-2061-00		$ -	$ -	$ -
Officer Safety Equipment - Game and Fish (GF)	ZOS7	0936000-000-000-2061-00		$ 28.00	$ 1.40	$ 26.60
Officer Safety - Registrar of Contractors (ROC)	ZOS8			$ -	$ -	$ -
Officer Safety Equipment - Animal Control (AC)	ZOS10			$ -	$ -	$ -
Officer Safety - Tonto Apache Police (TAR)	ZOS15	0950000-000-000-2061-00		$ 2.28	$ 0.11	$ 2.17
Overpayment Forfeited	ZOVF	1005000-314-000-3510-10	X105-4831	$ 2.67	$ 0.13	$ 2.54
Adult Probation Fee	ZPBA	4042000-335-000-3405-30	X25001335-4835	$ -	$ -	$ -
Probation Surcharge 2006 ($10.00)	ZPRS6	0871000-000-000-2061-00	T871-2061	$ 66.95	$ 3.35	$ 63.60
Probation Surcharge 2009 ($20.00)	ZPRS9	0871000-000-000-2061-00	T871-2061	$ 4,974.59	$ 248.73	$ 4,725.86
Probation Surcharge $5.00	ZPRSU	0871000-000-000-2061-00	T871-2061	$ 22.50	$ 1.13	$ 21.37
Reimbursement to County Attorney 60%	ZREIM	3544000-301-000-3400-11	X18201301004777	$ 1,277.80		$ 1,277.80
Reimbursement to Superior Court 40%	ZREIM	4574000-333-000-3400-16	X226333004864	$ 851.86		$ 851.86
Security Enhancement Fee (Local)	ZSECE			$ -	$ -	$ -
Warrant Fee (Local)	ZWAR	1005000-314-000-3510-10	X105-4831	$ 40.00	$ 2.00	$ 38.00
AZ Native Plant Fund	ZANP		STATE	$ -	$ -	$ -
Child Passenger Restraint	ZCPRF		STATE	$ -	$ -	$ -
Drug and Gang Enforcement Fines	ZDECJ		STATE	$ 1,186.43	$ 59.32	$ 1,127.11
DUI Abatement	ZDUIA		STATE	$ -	$ -	$ -
Domestic Violence Shelter Fund	ZDVSF		STATE	$ -	$ -	$ -
FARE Special Collection Fee 19%	ZFAR1		STATE	$ 1,813.88		$ 1,813.88
FARE Delinquency Fee $35.00	ZFAR2		STATE	$ 1,080.24		$ 1,080.24
Game and Fish - Wildlife	ZGF		STATE	$ 116.15	$ 5.81	$ 110.34
HURF 1 28-5438, 2533C	ZHRF1		STATE	$ -	$ -	$ -
HURF 3 28-5433C, 4139	ZHRF3		STATE	$ -	$ -	$ -
HURF - to DPS	ZHRFD		STATE	$ -	$ -	$ -
Prison Construction Fund	ZPCOF		STATE	$ 3,132.02	$ 156.60	$ 2,975.42
Registrar of Contractors	ZRCA		STATE	$ -	$ -	$ -
State Highway Fund	ZSHWY		STATE	$ -	$ -	$ -
State Highway Work Zone Fund	ZSHWZ		STATE	$ -	$ -	$ -
Display Suspended Plates (DPS)	ZSLPD		STATE	$ 116.61	$ 5.83	$ 110.78
State Photo Enforcement Base Fine	ZSPBF		STATE	$ -	$ -	$ -
State Photo Enforcement Clean Election Surcharge	ZSPCE		STATE	$ -	$ -	$ -
Bad Check Program - County Attorney	ZBAD		COUNTY ATTY	$ 50.00		$ 50.00
HURF - to Sheriff's Office 28-5533G	ZHRFS		SHERIFF	$ -	$ -	$ -
Display Suspended Plates (Sheriff's Office)	ZSLPS		SHERIFF	$ 13.44	$ 0.67	$ 12.77
HURF - to City Police	ZHRFC		CITY POLICE	$ -	$ -	$ -
Display Suspended Plates (City Police)	ZSLPC		CITY POLICE	$ -	$ -	$ -
TOTALS				**$ 59,998.17**	**$ 2,562.46**	**$ 57,435.71**
			TOTAL ADJUSTED BALANCE VERIFICATION			**$ 57,435.71**

DATE	CHECK NO.	AMOUNT	MONTHLY REMITTANCE TO:
7/9/12	4658	**$ 52,717.63**	GILA COUNTY TREASURER
	4659	**$ 7,217.77**	ARIZONA STATE TREASURER
	4660	**$ 50.00**	GILA COUNTY BAD CHECK PROGRAM
	4661	**$ 12.77**	SHERIFF SUSPENDED PLATES AND HURF
		$ -	CITY POLICE SUSPENDED PLATES AND HURF
		$ 59,998.17	**TOTAL DISTRIBUTIONS THIS MONTH**

I, DOROTHY A. LITTLE, Gila County Justice of the Peace, do hereby certify this is a true and correct copy of the funds collected by Payson Justice Court for JUNE, 2012.

DOROTHY A. LITTLE
Gila County Justice of the Peace

LIMITED JURISDICTION COURTS MONTHLY STATISTICAL REPORT

Page 1 Processing

Court ID: 404

County: PAYSON REGIONAL JUSTICE COURT Report Month/Year: June 2012

CRIMINAL TRAFFIC

	D.U.I. (a)	Serious* Violations (b)	All Other Violations (c)	TOTAL (d)
Pending 1st of Month	85	4	137	226
Filed	9	2	13	24
Transferred In	0	0	0	0
SUBTOTAL	94	6	150	250
Transferred Out	0	0	0	0
Other Terminations	10	1	17	28
TOTAL TERMINATIONS	10	1	17	28
Statistical Correction	0	0	0	0
Pending End of Month	84	5	133	222

***A.R.S. 28-661 (if misdemeanor), -662,-663,-664,-665,-693,-708. See Instructions.**

TRAFFIC FAILURE TO APPEAR**

Pending 1st of Month	Filed	Trans In	SUB-TOTAL	Trans Out	Other Term.	TOTAL TERM.	Stat. Corr.	Pending End of Month
193	0	0	193	0	1	1	0	192

****READ:** These are FORMAL FTA FILINGS AND DISPOSITIONS CHARGING ANOTHER CRIMINAL OFFENSE, not bench warrants for failure to appear. FTA filings should also have original traffic complaint recorded in the CRIMINAL TRAFFIC SECTION above until that traffic filing has been terminated. Issuing a bench warrant or an FTA does not terminate the traffic filing.

Criminal Traffic/FTA Court Trials Held: 0 Criminal Traffic/FTA Jury Trials Held: 0

CIVIL TRAFFIC

Pending 1st of Month	Filed	Trans In	SUB-TOTAL	Trans Out	Default Judg-ment	Other Term.	TOTAL TERM.	Stat. Corr.	Pending End of Month
956	257	0	1,213	0	14	310	324	0	889

Civil Traffic Hearings Held: 1

VIOLATIONS OF A.R.S. 28-702.01 AND 28-702.04
(Part of Civil Traffic Above)

Filed 85 Trans In 0 TOTAL 85

LIMITED JURISDICTION COURTS MONTHLY STATISTICAL REPORT

Court ID: 404 **Page 2 Processing**

County: PAYSON REGIONAL JUSTICE COURT Report Month/Year: June 2012

MISDEMEANOR

	Pending 1st of Month (a)	Filed (b)	Trans In (c)	SUB TOTAL (d)	Tran Out (e)	Other Term (f)	TOTAL TERM (g)	Stat. Corr. (h)	Pending End of Month (j)
Misdemeanor (Non-Traffic)	574	79	0	**653**	0	63	63	*0*	**590**
Failure to Appear (Non-Traffic)	59	0	0	**59**	0	0	0	*0*	**59**
TOTAL	633	79	0	**712**	0	63	63	0	**649**

TRIALS HELD

Misdemeanor Court/FTA Trials Held: **0** Misdemeanor/FTA Jury Trials Held: **0**

FELONY

Pending 1st of Month (a)	Filed (b)	Trans In (c)	SUB TOTAL (d)	Trans Out (e)	Other Term (f)	TOTAL TERM (g)	Stat. Corr. (h)	Pending End of Month (j)
36	**6**	**0**	42	**0**	**6**	6	0	**36**

Felony Preliminary Hearings Held: **0** Felony, Misdemeanor, Criminal Traffic Initial: Appearances: **140**

LOCAL NON-CRIMINAL ORDINANCES

	Pending 1st of Month	Filed	SUB-TOTAL	Terminated	Stat. Corr.	Pending End of Month
Parking	**0**	**0**	0	**0**	0	**0**
Non-Parking	**0**	**0**	0	**0**	0	**0**
TOTAL	0	0	0	0	0	**0**

LIMITED JURISDICTION COURTS MONTHLY STATISTICAL REPORT

Page 3 Processing

Court ID: 404

County: PAYSON REGIONAL JUSTICE COURT Report Month/Year: June 2012

CIVIL COMPLAINTS

	Small Claims (a)	Forcible Detainer (b)	Other Civil (c)	TOTAL (d)
Pending 1st of Month	**48**	**16**	**276**	**340**
Filed	**5**	**12**	**24**	**41**
Transferred In	**0**	**0**	**0**	**0**
SUBTOTAL	**53**	**28**	**300**	**381**
Transferred Out	**0**	**0**	**0**	**0**
Other Terminations	**2**	**11**	**40**	**53**
TOTAL TERMINATIONS	**2**	**11**	**40**	**53**
Statistical Correction	0	0	0	**0**
Pending End of Month	**51**	**17**	**260**	**328**

Small Claims Hearings Held/Defaults: **0**

Civil Court Trials Held: **7**

Small Claims Hearings Held/Defaults Before Volunteer Hearing Officer: **0**

Civil Jury Trials Held: **0**

DOMESTIC VIOLENCE/HARASSMENT PETITIONS

	Filed	Order Issued	Petition Denied	TOTAL TERM.
Domestic Violence	**20**	**20**	**1**	**21**
Harassment	**9**	**5**	**4**	**9**

HEARINGS HELD TO REVOKE OR MODIFY ORDER OF PROTECTION INJUNCTION AGAINST HARASSMENT

Order of Protection: **0**

Injunction Against: **0**

SPECIAL PROCEEDINGS/ACTIVITIES

Peace Bond Complaints Filed: **0**

Fugitive Complaints Filed: **0**

Juvenile Hearings Held: **0**

Search Warrants Issued: **18**

LIMITED JURISDICTION COURTS MONTHLY STATISTICAL REPORT

Page 4 Processing

Court ID: 404

County: PAYSON REGIONAL JUSTICE COURT

Report Month/Year: June 2012

WARRANTS OUTSTANDING

TRAFFIC WARRANTS OUTSTANDING

D.U.I.	**156**
Serious Violations	**10**
All Other Violations	**541**
TRAFFIC TOTAL	**707**

CRIMINAL WARRANTS OUTSTANDING

Felony	**138**
Misdemeanor	**751**
CRIMINAL TOTAL	**889**

MAIL BY THE 20TH WORKING DAY OF MONTH:

Arizona Supreme Court
Administrative Office of the Courts
1501 W. Washington St., Suite 410
Phoenix, AZ 85007-3327

ATTN: Research/Statistics Unit
(602) 542-9376

Signature of the Judge/Magistrate (or designee)

Dorothy A Little

Name of Preparer

7-17-12

Date of Preparation

ARF-1387 **4- W**

Regular BOS Meeting

Meeting Date: 08/07/2012

Reporting Period: Recorder's June 2011 Monthly Report

Submitted For: Sadie Dalton

Submitted By: Sadie Dalton, Recorder, Recorder's Office

Information

Subject

Recorder's June 2011 Monthly Report

Suggested Motion

Approval of the June 2012 monthly activity report submitted by the Recorder's Office.

Attachments

Recorder's June 2011 Monthly Report

GILA COUNTY RECORDER

REPORT FOR THE MONTH OF JUNE 2012

I, Sadie Tomerlin Dalton, County Recorder in and for the County of Gila, State of Arizona hereby state and certify that the fees earned for this month are as set forth in the attached report.

Sadie Tomerlin Dalton, Gila County Recorder

GILA COUNTY TREASURER'S RECEIPT
GILA COUNTY, ARIZONA

GILA COUNTY TREASURER
RECEIVED
103088 JUL 18 12

DATE 7-17-2012

CONTRACT #

GRANT #

DEPOSIT TO FUND General fund FUND # 1005/105

REMITTING AGENCY Recorder (120)

BILLING PERIOD June 2012

Account Code	Direct Deposit / Check #	Revenue Description	Amount	
1005-120-3400-99		105.01.120.4612	7760	38
7145-120-3400-99		555.01.120.4775	5372	00
7147-120-3400-99		557.01.120.4612	968	00
			14100	38

Preparer Signature: Jeri Beumer Title Recorder Clerk

Approved Signature: Sadie Gardner Title Recorder

SUMMARY OF DEPOSIT

Currency	
Coins	
Checks	14100 38
Total	14100 38

TREASURER By DCoy Date 7/18/12

TREASURER 120005

Bank Deposit Summary, From 6/1/12 12:00 AM To 6/30/12 11:59 PM

Date & Time	Deposit Id	Bank Account	Reference	Amount
Jun 1, 2012 4:57:03 PM	2475	B	Payson06/01/12	$48.00
Jun 4, 2012 3:13:25 PM	2477	B	globe	$250.00
Jun 4, 2012 4:55:10 PM	2478	B	Globe	$321.00
Jun 4, 2012 4:55:40 PM	2479	B	Payson06/04/12	$37.00
Jun 5, 2012 4:54:20 PM	2480	B	Globe	$196.00
Jun 5, 2012 4:59:34 PM	2481	B	Payson05/05/12	$28.00
Jun 6, 2012 4:52:59 PM	2482	B	Globe	$627.50
Jun 7, 2012 4:55:21 PM	2483	B	Globe	$352.00
Jun 7, 2012 4:55:42 PM	2484	B	Payson06/07/12	$102.00
Jun 8, 2012 3:31:08 PM	2487	B	Globe	$780.00
Jun 8, 2012 4:59:32 PM	2486	B	Payson06/08/12	$27.00
Jun 11, 2012 12:54:25 PM	2490	B	Globe	$239.00
Jun 11, 2012 4:57:00 PM	2489	B	Payson06/11/12	$108.00
Jun 12, 2012 4:53:37 PM	2491	B	Globe	$99.00
Jun 12, 2012 4:53:54 PM	2492	B	Payson06/12/12	$26.00
Jun 13, 2012 8:16:38 AM	2494	B	Globe	$355.00
Jun 14, 2012 10:15:37 AM	2495	B	Payson 6/14/12 cor	$83.00
Jun 14, 2012 4:54:36 PM	2496	B	06/14/12 Payson	$32.00
Jun 14, 2012 4:57:47 PM	2497	B	Globe	$183.00
Jun 15, 2012 4:53:53 PM	2498	B	Globe	$304.00
Jun 15, 2012 4:53:57 PM	2499	B	Payson06/15/12	$39.00
Jun 18, 2012 4:54:15 PM	2500	B	Globe	$1,416.00
Jun 18, 2012 4:56:01 PM	2501	B	payson06/18/12	$24.00
Jun 19, 2012 4:56:32 PM	2502	B	Payson06/19/12	$98.00
Jun 19, 2012 4:58:50 PM	2503	B	Globe	$852.00
Jun 20, 2012 4:55:15 PM	2504	B	Payson06/20/12	$58.00
Jun 21, 2012 12:05:19 PM	2506	B	0	$0.00
Jun 21, 2012 12:12:47 PM	2507	B	globe	$224.00
Jun 21, 2012 4:54:21 PM	2508	B	Globe	$203.00
Jun 21, 2012 4:56:19 PM	2509	B	payson06/21/2012	$25.00
Jun 22, 2012 4:55:06 PM	2510	B	Payson06/22/2012	$17.00
Jun 25, 2012 5:00:19 PM	2511	B	06/25/2012 payson	$93.00
Jun 26, 2012 8:14:36 AM	2512	B	globe 6/25	$418.00
Jun 26, 2012 8:14:36 AM	2513	B	globe 6/22	$128.00
Jun 26, 2012 4:55:31 PM	2514	B	Payson06/26/2012	$47.00
Jun 26, 2012 5:00:36 PM	2515	B	globe 6/26	$372.00
Jun 27, 2012 4:54:36 PM	2516	B	Globe	$181.00
Jun 27, 2012 5:07:14 PM	2517	B	Payson06/27/2012	$0.00
Jun 28, 2012 4:54:40 PM	2518	B	Globe	$379.00
Jun 29, 2012 11:38:25 AM	2521	B	06/28/12 cor3	$21.00
Jun 29, 2012 4:54:36 PM	2522	B	Globe	$319.00
Jun 29, 2012 4:54:57 PM	2523	B	Payson06/29/12	$24.00
			Total	$9,135.50

MONTHLY ACTIVITY REPORT - June 2012

DATE	AMT PAID	1005	7145	7146	7147	INTO SUSPENSE	OUT OF SUSPENSE	TOTAL FUNDS
6/1/2012	298.00	632.00	260.00	0.00	0.00	268.00	594.00	892.00
6/4/2012	358.00	485.00	216.00	0.00	0.00	327.00	343.00	701.00
6/5/2012	224.00	427.00	192.00	0.00	0.00	132.00	395.00	619.00
6/6/2012	627.50	771.50	216.00	0.00	0.00	144.00	360.00	987.50
6/7/2012	454.00	538.00	268.00	0.00	0.00	286.00	352.00	806.00
6/8/2012	807.00	804.00	464.00	0.00	0.00	179.00	461.00	1268.00
6/11/2012	347.00	504.40	224.00	0.00	445.00	246.00	826.40	1173.40
6/12/2012	125.00	271.00	116.00	0.00	0.00	167.00	262.00	387.00
6/13/2012	438.00	637.00	324.00	0.00	0.00	202.00	523.00	961.00
6/14/2012	215.00	333.00	152.00	0.00	0.00	249.00	270.00	485.00
6/15/2012	343.00	548.00	208.00	0.00	0.00	177.00	413.00	756.00
6/18/2012	1440.00	566.00	256.00	0.00	0.00	1164.00	382.00	822.00
6/19/2012	950.00	790.00	452.00	0.00	0.00	140.00	292.00	1242.00
6/20/2012	282.00	457.00	216.00	0.00	0.00	95.00	388.00	673.00
6/21/2012	228.00	431.00	192.00	0.00	0.00	178.00	395.00	623.00
6/22/2012	145.00	466.00	180.00	0.00	0.00	216.00	501.00	646.00
6/25/2012	511.00	660.00	320.00	0.00	0.00	0.00	469.00	980.00
6/26/2012	419.00	567.00	316.00	0.00	0.00	215.00	464.00	883.00
6/27/2012	181.00	540.00	240.00	0.00	0.00	1356.00	599.00	780.00
6/28/2012	400.00	799.80	312.00	0.00	523.00	175.00	1234.80	1634.80
6/29/2012	343.00	802.00	248.00	0.00	0.00	179.00	707.00	1050.00
TOTAL	9,135.50	12044.70	5,372.00	0.00	968.00	6,095.00	10,249.20	18,384.70

Journal Activity

Account		Debits	Credits	Net
Asset				
1005SuspensePrePayAccounts	1005 Suspense - Prepay	$6,248.20	($1,000.00)	$5,248.20
Cash	Cash/Check	$9,135.50	$0.00	$9,135.50
D-1005-120-01-4612-001	Copies(deferred)	$0.00	($2.00)	($2.00)
D-1005-120-01-4612-003	Postage(deferred)	$8.00	($13.00)	($5.00)
D-1005-120-01-4612-023	Recording Fee (deferred)	$24.00	($39.00)	($15.00)
D-1005-120-01-4612-027	Fax(deferred)	$0.00	($5.00)	($5.00)
D-7145-120-01-4775-004	Recorder Storage and Retrieval (deferred)	$32.00	($52.00)	($20.00)
ETransfer	Electronic Transfers	$5,095.00	$0.00	$5,095.00
	Total	$20,542.70	($1,111.00)	$19,431.70
Liability				
1005SuspenseChargeAccounts	1005 Suspense - Charge	$104.00	($64.00)	$40.00
	Total	$104.00	($64.00)	$40.00
Expense				
	Total	$0.00	$0.00	$0.00
Revenue				
1005-120-01-4612-001	Copies	$0.00	($530.00)	($530.00)
1005-120-01-4612-002	Certified Seal	$0.00	($54.00)	($54.00)
1005-120-01-4612-003	Postage	$0.00	($1,034.20)	($1,034.20)
1005-120-01-4612-005	Affidavit of Property Value	$0.00	($348.00)	($348.00)
1005-120-01-4612-008	Additional Transaction Fee	$0.00	($75.00)	($75.00)
1005-120-01-4612-012	Overpayment	$0.00	($197.00)	($197.00)
1005-120-01-4612-018	Misc Fees (Notification)	$0.00	($65.00)	($65.00)
1005-120-01-4612-023	Recording Fee	$0.00	($9,495.50)	($9,495.50)
1005-120-01-4612-026	Refunds	$0.00	($74.00)	($74.00)
1005-120-01-4612-027	Fax	$0.00	($100.00)	($100.00)
1005-120-01-4612-029	Search	$0.00	($45.00)	($45.00)
7145-120-01-4775-004	Recorder Storage and Retrieval	$0.00	($5,352.00)	($5,352.00)
7147-120-01-4774-031	Miscellaneous	$0.00	($968.00)	($968.00)
eRecording	eRecording	$3,897.00	($5,031.00)	($1,134.00)
	Total	$3,897.00	($23,368.70)	($19,471.70)
	Total	$24,543.70	($24,543.70)	$0.00

Range Summary

Range	Account	Debits	Credits	Net
Cash/Check				
	Cash Cash/Check	$9,135.50	$0.00	$9,135.50
	Range Total	$9,135.50	$0.00	$9,135.50

Sadie Tomerlin Dalton
Gila County Recorder
For Month Of:

New Fiscal Year Form

FY **2011-2012**

Month	No of Doc.	Recorder Storage & Retrieval 7145	Recording Fees 1005	Computer Svcs 7147	Assessor Storage 7143	Mining fees 7146	Recorder Check to Treasurer
July	1,192	4,236	11,989.38	760.00	3,932	2.00	20,919.38
Aug	1,272	4,796	14,380.90	1,774.56	4,536	23.00	25,510.46
Sept	1,047	3,804	13,139.02	1,030.00	3,496	10.00	21,479.02
Oct	1,134	4,212	13,523.46	1,637.00	3,916	0.00	23,288.46
Nov	1,147	4,312	10,742.49	961.43	3,880	3.00	19,898.92
Dec	1,059	4,028	9,556.58	953.41	3,740	17.00	18,294.99
Jan	1,105	4,120	6,770.90	869.99			11,760.89
Feb	1,089	4,128	12,092.41	2,065.80		1.00	18,287.21
Mar	1,458	5,448	7,396.37	1,644.57			14,488.94
Apr	1,705	6,640	14,808.37	5,060.88		1.00	26,510.25
May	1,506	5,832	13,700.89	13,606.83			33,139.72
June	1,405	5,372	7,760.38	968.00			14,100.38
Total	**15,119**	**56,928**	**135,861.15**	**31,332.47**	**23,500**	**57.00**	**247,678.62**

Fiscal Year All Monies **247,678.62**

	A	B	C	D	E	F
1		GILA COUNTY RECORDER				
2						
3		REPORT FOR		June 2012		
4						
5	SECTION I		CREDIT	DEBIT	TOTAL	EXPLANATION
6	1005 (GENERAL FUND)	PAID INTO SUSPENSE ACCT	$6,095.00		$0.00	
7		PAID OUT OF SUSPENSE ACCT		$10,249.20	$4,154.20	
8		RECORDING FEES	$12,044.70	$0.00	$0.00	
9		REFUNDS-EXCESS FEES	$0.00	$74.00		
10		INTEREST PD TO ACCT	$0.88	$0.00		
11		error in undeposit 1/2012		$41.00		
12		error in april 2012 IRS		$16.00		
13	TOTAL 1005 FUNDS		$18,140.58	$10,380.20	$7,760.38	
14						
15	SECTION II					
16		7145 FUND (RECORDER)	$5,372.00	$0.00	$5,372.00	
17		7146 FUND (MINING - 80% STATE TREAS)				
18		7146 FUND (MINING - 20% RECORDER)		$0.00		
19		7147 FUND (COMPUTER SVCS)	$968.00	$0.00	$968.00	
20	TOTAL SEC II FUNDS		$6,340.00	$0.00	$6,340.00	
21						
22	COMBINED TOTALS - TOTAL FEES COLLECTED		$24,480.58	$10,380.20	$14,100.38	
23						
24						

House Account Summary

Gila County AZ Recorder

For the Period of 06/01/2012 - 06/30/2012

Immediate and Deferred Accounts

House Account ID	House Account Name	Starting Balance	Charges	Payments	Ending Balance
ACCU	ACCUSEARCH	($179.00)	$0.00	$0.00	$179.00)
ADOR-M	STATE OF ARIZONA - DEPT OF REVENUE	($187.37)	$46.80	$0.00	$140.57)
ADOT	AZ DEPT OF TRANS	($295.50)	$0.00	$0.00	$295.50)
APS	APS/COPIES	($185.00)	$0.00	$0.00	$185.00)
APSR	APS/RECORDINGS	($201.00)	$0.00	$0.00	$201.00)
ARARS	AZ RESEARCH &AMP RETRIEVAL SVCS	($179.00)	$39.00	$0.00	$140.00)
AWC	ARIZONA WATER COMPANY	($250.00)	$0.00	$0.00	$250.00)
AZDOR	ADOR ACCOUNTS PAYABLE	($222.00)	$8.00	$0.00	$214.00)
AZRE/RECORDING	ARIZONA DEPT OF REALESTATE	($2,062.00)	$0.00	$0.00	($2,062.00)
CARD	Cardon Hiatt / The Vineyrd Group	($105.00)	$0.00	$0.00	$105.00)
EQUIT	EQUITY SERVICES	($140.00)	$19.00	$0.00	$121.00)
ERAY	ERA YOUNG REALTY	($228.20)	$46.80	$0.00	$181.40)
EXCEL	EXCEL DOCUMENT SERVICES	($159.00)	$41.00	$0.00	$118.00)
FARES	First American Corelogic Inc.	($341.40)	$190.00	$0.00	$151.40)
FATM	FIRST AMERICAN MICROFICHE	($724.00)	$258.60	$0.00	$465.40)
FB	FLOYD BLEAK / NANCY SHEPPARD	($618.00)	$0.00	$0.00	$618.00)
FCS,INC	Pacific Corportate & Title Service	($58.00)	$7.00	$0.00	($51.00)
FNDS	LPS APPLIED ANALYTICS	($668.20)	$190.00	$0.00	$478.20)
GCCD	GILA COUNTY COMMUNITY DEVELOPMENT	$73.50	$0.00	$0.00	$73.50
HANSEN-ENGINEERING	HANSEN ENGINEERING & SURVEYING	($67.00)	$24.00	$0.00	($43.00)
IMAPP	IMAPP , INC	($53.40)	$0.00	$0.00	($53.40)
INDEPTH	INDEPTH SOLUTIONS INC	($64.00)	$6.00	$0.00	($58.00)
Ingeo	Ingeo - eRecording	($495.00)	$329.00	($359.00)	$525.00)
IRS	INTERNAL REVENUE SERVICE	($82.00)	$96.00	($64.00)	($50.00)
LA001	First American Title Lenders Advantage	($480.50)	$10.00	$0.00	$470.50)
MHK	MORRIS HALL KINGHORN	($266.00)	$0.00	$0.00	$266.00)
NDTS-TSG	FIRST AMERICAN TITLE INSURANCE COMPANY	($931.00)	$0.00	$0.00	$931.00)
PIONE	PIONEER TITLE AGENCY FICHE	($61.00)	$263.00	($1,000.00)	$798.00)
PTP2	PIONEER TITLE AGENCY RECORDINGS 2	($7,047.00)	$5,085.00	$0.00	($1,962.00)
RSSI	RECORD SEARCHING SERVICES INC	($175.00)	$7.00	$0.00	$168.00)
simplifile	Simplifile - eRecording	($163.00)	$3,568.00	($4,672.00)	($1,267.00)
SOUTHWES DIV	FIRST AMERICAN TITLE	($1,186.20)	$15.00	$0.00	($1,171.20)
Totals		**($17,800.27)**	**$10,249.20**	**($6,095.00)**	**($13,646.07)**

ARF-1405 **4- X**

Regular BOS Meeting

Meeting Date: 08/07/2012

Reporting Period: June 26, 2012, BOS Meeting Minutes

Submitted For: Marilyn Brewer, Deputy Clerk, BOS

Submitted By: Marilyn Brewer, Deputy Clerk, BOS, Clerk of the Board of Supervisors

---

Information

Subject

June 26, 2012, BOS Meeting Minutes

Suggested Motion

Approval of the June 26, 2012, BOS meeting minutes.

Attachments

BOS 06-26-2012 Meeting Minutes

BOARD OF SUPERVISORS MINUTES
GILA COUNTY, ARIZONA

Date: June 26, 2012

TOMMIE C. MARTIN Chairman	**JOHN F. NELSON** Clerk of the Board
SHIRLEY L. DAWSON Vice-Chairman	By: Marilyn Brewer Deputy Clerk
MICHAEL A. PASTOR Member	Gila County Courthouse Globe, Arizona

---

PRESENT: Tommie C. Martin, Chairman (via ITV conferencing); Shirley L. Dawson, Vice-Chairman; Michael A. Pastor, Supervisor; Don McDaniel, Jr., County Manager; John Nelson, Deputy County Manager/Clerk; Marian Sheppard, Chief Deputy Clerk; and June Ava Florescue, Deputy County Attorney.

Item 1 – Call to Order – Pledge of Allegiance – Invocation

The Gila County Board of Supervisors met in a regular session at 10:00 a.m. this date in the Board of Supervisors hearing room. Michael Pastor led the Pledge of Allegiance and Reverend Kelly Woolridge of the Payson First Assembly of God Church in Payson delivered the invocation.

Supervisor Pastor introduced Julian Guerrero, who is a junior at Arizona State University and is getting a degree in political science. Mr. Guerrero came to volunteer to learn about county government so he's been going to the various divisions and departments to get a feel for government.

Item 2 – PRESENTATIONS:

2A. Presentation of information from U.S. Forest Service Incident Commander, Matt Reidy, and U.S. Forest Service Incident Management Team Liaison, Gordon Wigman, regarding the status of the Poco Fire located 6 miles northeast of Young, Arizona, with a report on Gila County's bladder/tank system and its role in the Poco Fire.

Matt Reidy, U.S. Forest Service Incident Commander, and Gordon Wigman, U.S. Forest Service Incident Management Team Liaison, presented an update on the status of the Poco Fire located 6 miles northeast of Young. Mr. Reidy stated that they had just spent 2 weeks on the Poco Fire suppression and it was turned over to the local fire-fighting team yesterday. Mr. Reidy stated that on behalf of the Northern Arizona Team, he wanted to express their thanks

because they were so impressed with Gila County due to the fact that the County had prepared and invested in key elements to suppress the fire such as the water bladders and tank systems that were critical in containing this fire due to the lack of water across the Mogollon Rim. On behalf of the Northern Arizona Team they presented a plaque to Chairman Martin on behalf of the Board and to Steve Stratton, Public Works Division Director, as a token of their appreciation. Mr. Reidy also had a number of certificates that he asked Mr. Stratton to present to his staff because without their help he wasn't sure they could have been successful. Mr. Wigman stated he was born and raised in Globe and anything they needed while fighting this fire was immediately provided by the County. Mr. Wigman said, "Gila County is top notch and I love to call Gila County home." Buck Wickham, a resident of Payson, stated that he was raised on top of the Rim and had been on a lot of fires in Gila County. He stated that the Wildfire Protection Plan adopted by the Board of Supervisors has made Gila County a safer place for those communities on top of the Rim and he commended Chairman Martin for the work she has done. Each Board member thanked the U.S. Forest Service staff as well as the Public Works Division staff, Emergency Services Division staff and the Sheriff's Office staff for the effort they put into protecting Gila County. Mr. Stratton also recognized several members of his staff.

2B. Public recognition of 2 employees for May's "Spotlight on Employees" Program, as follows: Merle Ray and Samson Arney.

Erica Raymond, Human Resources Assistant, presented gift cards as recognition awards to 2 employees for May's "Spotlight on Employees" Program as follows: Merle Ray and Samson Arney. Each Board member thanked the employees for their dedicated work.

ITEM 3 – PUBLIC HEARINGS:

3A. Public Hearing - Information/Discussion/Action to adopt Resolution No. 12-06-02 naming a previously unnamed road as N. Byrne Road.

Michael O'Driscoll, Health & Emergency Services Division Director, stated that a notice was posted for the naming of this road and no comments or objections were received. Chairman Martin opened the public hearing and called for comments from the public; none were received. She closed the public hearing and entertained a motion. Upon motion by Supervisor Pastor, seconded by Vice-Chairman Dawson, the Board unanimously adopted Resolution No. 12-06-02 naming a previously unnamed road as N. Byrne Road. **(A copy of the Resolution is permanently on file in the Board of Supervisors' Office.)**

3B. Public Hearing - Information/Discussion/Action to adopt Resolution No. 12-06-04 renaming E. Horseshoe Lane as E. Spadafore Way.

Mr. O'Driscoll stated that no comments or objections were received for renaming this street. Chairman Martin opened the public hearing and called for comments from the public; none were received. She closed the public hearing and entertained a motion. Upon motion by Vice-Chairman Dawson, seconded by Supervisor Pastor, the Board unanimously adopted Resolution No. 12-06-04 renaming E. Horseshoe Lane as E. Spadafore Way. **(A copy of the Resolution is permanently on file in the Board of Supervisors' Office.)**

3C. Public Hearing - Information/Discussion/Action to adopt Resolution No. 12-06-05 renaming a portion of N. McLellan Drive to E. Pecos Drive. (A copy of the Resolution is permanently on file in the Board of Supervisors' Office.)

Mr. O'Driscoll stated that no comments or objections were received for renaming this street. Chairman Martin opened the public hearing and called for comments from the public; none were received. She closed the public hearing and entertained a motion. Upon motion by Supervisor Pastor, seconded by Vice-Chairman Dawson, the Board unanimously adopted Resolution No. 12-06-05 renaming a portion of N. McLellan Drive to E. Pecos Drive. **(A copy of the Resolution is permanently on file in the Board of Supervisors' Office.)**

3D. Public Hearing - Information/Discussion/Action to adopt Resolution No. 12-06-06 renaming a section of N. McLellan Drive as S. Camino Way.

Mr. O'Driscoll stated that no comments or objections were received for renaming this street. Chairman Martin opened the public hearing and called for comments from the public; none were received. She closed the public hearing and entertained a motion. Upon motion by Vice-Chairman Dawson, seconded by Supervisor Pastor, the Board unanimously adopted Resolution No. 12-06-06 renaming a section of N. McLellan Drive as S. Camino Way. **(A copy of the Resolution is permanently on file in the Board of Supervisors' Office.)**

ITEM 4 – REGULAR AGENDA ITEMS:

4A. (Motion to adjourn as the Gila County Board of Supervisors, and convene as the Gila County Library District Board of Directors.) Information/Discussion/Action to approve Grantee Agreement No. GRA-RC029-13-0533-01 that is between the San Carlos Apache Regional Partnership Council, Arizona Early Childhood Development and Health Board (First Things First) and the Gila County Library District, which is a "Community-Based Literacy Grant" in the amount of $36,663 for the period August 1, 2012, through June 30, 2013.

Upon motion by Supervisor Pastor, seconded by Vice-Chairman Dawson, the Board adjourned as the Gila County Board of Supervisors and convened as the Gila County Library District Board of Directors.

Jacque Griffin, Assistant County Manager/Librarian, advised that the Gila County Library District (District) has a First Things First literacy grant in place with the Gila Regional Council that allows the District to provide family-based early-literacy training and a book a month to children from birth to age 5 through the Imagination Library and the Dolly Parton Foundation. This Agreement will allow the District to provide the same program for the San Carlos Region because First Things First divides up the State of Arizona differently than counties. This Agreement will provide a similar program to those successful programs that have been held the past 2 years in the Globe, Payson, Pine, Strawberry and Hayden areas. Chairman Martin inquired if services provided under this Agreement would extend to the Tonto Apache Reservation. Ms. Griffin replied that the Tonto Reservation is included in the Gila Region, which provides these services for all of Gila County except San Carlos and a small portion of the White Mountain Apache Tribe. Chairman Martin stated this is one of the finest programs for children and thanked Ms. Griffin for her efforts on behalf of children. Upon motion by Supervisor Pastor, seconded by Vice-Chairman Dawson, the Board unanimously approved Grantee Agreement No. GRA-RC029-13-0533-01 that is between the San Carlos Apache Regional Partnership Council, Arizona Early Childhood Development and Health Board (First Things First) and the Gila County Library District, which is a "Community-Based Literacy Grant" in the amount of $36,663 for the period August 1, 2012, through June 30, 2013.

4B. Information/Discussion/Action to adopt the tentative 2012-2013 fiscal year budget for the Gila County Library District. (Motion to adjourn as the Gila County Library District Board of Directors and reconvene as the Gila County Board of Supervisors.)

Ms. Griffin advised that the proposed Gila County Library District budget is located on page 18 of the Gila County Tentative Budget for 2012-2013. The highlights for the Library District are that the tax rate has been budgeted to remain the same at 20 cents, which represents a 6.3% decrease in property tax revenue because of the decline in assessed valuation. The funding provided to the 8 community libraries within Gila County is for maintenance and operations and will remain the same. The County's support to the Library District for the non-library functions, which comes from the General Fund, has been decreased 5% and the total budget has increased, which reflects an increase in the Library District's Contingency Reserve. In 2008, at which time there was a downturn in the economy, the Board of Supervisors approved the Library District creating a contingency savings to help carry the Library District and the community libraries throughout the continued economic downturn. Upon motion by Vice-Chairman Dawson, seconded by Supervisor Pastor, the

Board unanimously adopted the tentative 2012-2013 fiscal year budget for the Gila County Library District in the amount of $1,869,559.00.

Upon motion by Supervisor Pastor, seconded by Vice-Chairman Dawson, the Board adjourned as the Gila County Library District Board of Directors and reconvened as the Gila County Board of Supervisors.

4C. Information/Discussion/Action to adopt the tentative 2012-2013 fiscal year budget for Gila County.

Don McDaniel, County Manager, stated that this was the time to consider adoption of the 2012-2013 fiscal year tentative budget. He also wanted to recognize the fact that this year there was fantastic cooperation from all of County leadership. All of the elected officials and appointed department heads were very helpful in putting together this tentative budget. He then began a PowerPoint presentation advising that the tentative budget is simply to set the upper expenditure limit for County spending for the coming year and approval of same will also authorize the publication of the budget and a public hearing will be set for July 17th to adopt the final budget. Mr. McDaniel stated that before actually starting the budget process, the Board gave fairly specific directions with regard to what its expectations were for this year's budget. First, there was to be no increase in the County property tax rate to property owners and taxpayers. In addition to keeping the rate the same, the plan was to operate County functions within the resultant reduction in property tax revenue, which occurs when the rate stays the same, but property valuations go down. The County, at the same time, would maintain public service levels, emphasizing law enforcement, criminal prosecution, judicial, roads, landfill and health and community services. Finally, as required by law, the County would provide for a balanced budget. Those were the assumptions when the administrative team discussed the budget with each division/department head and elected officials including working toward achieving a Countywide average 5% reduction in General Fund expenditures. It was noted that there would be no mandatory employee reductions; however, it was expected that each department would come forward with reduction plans of their own, which could include reorganization or doing things differently, delaying hiring or not hiring certain positions at all. This allowed the County to eliminate the across-the-board 120-day hiring freeze that was implemented about 3-4 years ago. There would also be no new programs included in the budget unless there was corresponding, offsetting revenues. In summarizing the tentative budget, Mr. McDaniel stated there would be no change in the General Fund tax rate; County property tax revenue has decreased about 6.5%; the General Fund budget has decreased by 5.1% and the overall budget increased by 0.4%, which is primarily attributed to capital improvement projects and special projects that had a very small increase. He also advised that a significant part of the budget shows that the authorized position list has decreased by 24 FTE (full time employees) whereas last year it was decreased by 6 or 8 FTE. Mr. McDaniel advised that what was not funded in the budget are no reclassifications of

positions and no permanent salary increases, either individually or across the board, because there were several requests for both. He then reviewed the items that are included in the budget. $275,000 is included to continue supporting the Gila County Community College for items such as utilities and minor maintenance. Also budgeted is a one-time lump sum pay increase for County employees. He clarified that there will not be an adjustment to pay grades or to percentages of pay rate, but there will be a one-time check payment that will be split into 2 parts—one part will be considered in December 2012 based upon a consumer price index increase and the other part would be considered in June 2013 that would be based upon employee performance appraisals that are a part of the County's management process. Mr. McDaniel further explained that $500,000 has been budgeted to conduct a classification and compensation study to be started as soon as possible after the budget is adopted. This study would commence around August or September 1st and it should be completed by March 31, 2013. The classification and compensation study would be conducted by an outside consultant for the purpose of establishing internal equity and external parity and would be done on the basis of positions--not on the basis of people. Mr. McDaniel emphasized that the study would be conducted with a tremendous amount of cooperation and coordination with the stakeholders that are involved, meaning all County elected officials and appointed department heads, who would have to get involved early in the process and for the duration of the study. He added that there would have to be agreement and consensus along the way that the comparators used by the consultant were agreeable by all players and that all of the assumptions and guidelines that they would establish as a part of the study would be agreed to by all people. Upon motion by Supervisor Pastor, seconded by Vice-Chairman Dawson, the Board unanimously approved the tentative FY 2012-2013 budget for Gila County in the amount of $96,468,130, authorized the publication of the summary budget, and set the public hearing for July 17, 2012, to adopt the final FY 2012-2013 Gila County budget.

4D. Information/Discussion/Action to ratify the Board of Supervisors' approval for the electronic submission of a Drug, Gang, and Violent Crime Task Force Grant Application by the Gila County Sheriff's Office to the Arizona Criminal Justice Commission in the amount of $376,410 and, if awarded, to be used during the period of July 1, 2012, through June 30, 2012.

Sheriff John Armer stated that this is a request to apply for a grant renewal application to the Arizona Criminal Justice Commission for a grant that has been in existence since 1988 for the Gila County Narcotics Gang and Violent Crime Task Force in the amount of $376,410. There is a required 25% cash match from the County in the amount of $94,102. He noted that this application had to be submitted back in March and was done electronically. Vice-Chairman Dawson inquired if any of these funds are used for the San Carlos Apache Reservation. Sheriff Armer replied that very little of these funds

are used for the San Carlos Apache Reservation. He stated that the Sheriff's Office has responded to requests from the San Carlos Police Department for assistance at various times and the Sheriff's Office has provided for Task Force personnel to assist them in those very specific requests. However, because of the opinion the Tribe has that it doesn't want any proactive enforcement from outside of the Reservation, the Sheriff's Office only responds to their specific requests. Upon motion by Vice-Chairman Dawson, seconded by Supervisor Pastor, the Board unanimously ratified the Board of Supervisors' approval for the electronic submission of a Drug, Gang, and Violent Crime Task Force Grant Application by the Gila County Sheriff's Office to the Arizona Criminal Justice Commission in the amount of $376,410 and, if awarded, to be used during the period of July 1, 2012, through June 30, 2012.

4E. Information/Discussion/Action to approve the Third Amended Intergovernmental Agreement between Gila County and the Arizona Counties Insurance Pool which shall become effective upon the later of July 1, 2012, or the approval of all parties as provided in paragraph 22 of the IGA, and shall continue in force and effect for a period of ten years or until terminated in accordance with the terms and provisions of the Agreement and, further, may be renewed for an additional ten-year term by mutual agreement by part or all of the parties prior to the expiration of the original or any renewal term of the Agreement.

Mr. McDaniel called on John Nelson, Deputy County Manager/Clerk, to present this item. Mr. Nelson stated this is the County's third amendment to this Contract with the Arizona Counties Insurance Pool (ACIP). This Amendment does several things. Currently the County has 2 individual pools with ACIP—a Property Liability Casualty Insurance Pool and a Workmen's Compensation Pool. In this Amendment, it combines both pools and gives the County greater flexibility. This Amendment will allow different entities to participate differently within the pool, which means that another governmental entity or another county could come in, take advantage of the pool's administration, loss retentions and claims, but not be part of the risk pool; it would have its own separate risk pool. It would take a majority of the ACIP Board to approve this, but it will now be allowed. The Amendment also cleans up some of the language. It will also give ACIP staff the authority to settle claims up to $50,000; the previous authority was $15,000. Also included is the authorization allowing ACIP to expel a member based on a 2/3 vote of the members, which Mr. Nelson believes is a critical point when reviewing the County's health insurance. Mr. Nelson further explained that some counties participate on different levels than others and if there is a county that refuses to participate and continues to have heavy claims, it can be expelled by a 2/3 vote of the members. Supervisor Pastor inquired about the increased settlement of claims from $15,000 up to $50,000, and whether those claims will be reported to the ACIP members on a regular basis. Mr. Nelson replied that these claims would come before the executive committee before being approved and then the entire board would be notified. Chairman Martin

inquired if there will ever be additions of groups to the ACIP pool. Mr. Nelson stated that one of the provisions that was put in the Amendment was that other groups could add to this pool differently--probably not accept a county into this pool as it is operating and also accept their risk, but there may be in the future a county that wants to take advantage of ACIP's loss control mechanisms, administration, policies, and procedures, but maintain its own risk pool. That would require a majority vote of the pool members in order for that to happen. Upon motion by Supervisor Pastor, seconded by Vice-Chairman Dawson, the Board unanimously approved the Third Amended Intergovernmental Agreement between Gila County and the Arizona Counties Insurance Pool, which shall become effective upon the later of July 1, 2012, or the approval of all parties as provided in paragraph 22 of the IGA, and shall continue in force and effect for a period of ten years or until terminated in accordance with the terms and provisions of the Agreement and, further, may be renewed for an additional ten-year term by mutual agreement by part or all of the parties prior to the expiration of the original or any renewal term of the Agreement.

4F. Information/Discussion/Action to approve the Gila County Population Health Policy Initiative Intergovernmental Agreement (Contract No. ADHS12-021335) between the Arizona Department of Health Services and Gila County Division of Health and Emergency Services in the amount of $43,748 for the period April 1, 2012, through March 31, 2015.

Mr. O'Driscoll stated that if the Board approves this Intergovernmental Agreement, the Gila County Health Department will use the funding in the amount of $43,748 to target strategies to address worksite wellness by partnering with local businesses as well as working with internal programs within Gila County worksites to implement programs to address chronic diseases such as obesity and heart disease. Supervisor Pastor inquired if when referring to worksite wellness, will that be done in partnership with the Gila County Community College wellness center in setting up programs where employees could use the wellness center? Mr. O'Driscoll stated that this particular funding will not allow partnering with wellness centers; however, there are additional grants available that are being reviewed that might offer that partnership. This program would be more of a community outreach and going to the local businesses and strategizing with them to identify if there's a need for some wellness programs in their sites as well as Gila County worksites. The Department will also be working with Jacque Griffin and the County's Wellness Program for internal Gila County worksites. Upon motion by Vice-Chairman Dawson, seconded by Supervisor Pastor, the Board unanimously approved the Gila County Population Health Policy Initiative Intergovernmental Agreement (Contract No. ADHS12-021335) between the Arizona Department of Health Services and Gila County Division of Health and Emergency Services in the amount of $43,748 for the period April 1, 2012, through March 31, 2015.

4G. Information/Discussion/Action to approve the revised Attachment A to Agreement No. JPA 12-056 between Arizona Department of Transportation and Gila County d/b/a Gila Employment and Special Training and authorize the match money total amount for the 5310 Programs of $10,166.98, for the purchase of one lift-equipped cutaway van and one minivan without lift to allow the GEST Program to continue providing the authorized transportation needs to the individuals in Gila County.

David Fletcher, Community Services Division Director, stated that approximately a year ago, the Gila Employment and Special Training (GEST) Program Manager applied for a grant to the Arizona Department of Transportation (ADOT) for 3 vehicles. Approximately 3 months ago the County was notified of the award of a pickup truck, which was approved by the Board, and now ADOT has notified the County that 2 more vehicles that were on their B list have also been approved. Mr. Fletcher requested that the Board authorize this award and the matching GEST funds in the amount of $10,166.98. Vice-Chairman Dawson inquired about the total cost of the vehicles, which Mr. Fletcher explained that the match was approximately 10% of the total cost. Upon motion by Supervisor Pastor, seconded by Vice-Chairman Dawson, the Board unanimously approved the revised Attachment A to Agreement No. JPA 12-056 between the Arizona Department of Transportation and Gila County d/b/a Gila Employment and Special Training and authorized the match money total amount for the 5310 Programs of $10,166.98, for the purchase of one lift-equipped cutaway van and one minivan without lift to allow the GEST Program to continue providing the authorized transportation needs to the individuals in Gila County.

4H. Information/Discussion/Action to review all bids submitted for Invitation for Bids No. 033012-1 for MC-800 liquid asphalt; award to the lowest, responsible and qualified bidder; and authorize the Chairman's signature on the award contract for the winning bidder.

Joseph Heatherly, Finance Director, requested that the Board table this item so staff could review this proposal in more detail. Upon motion by Vice-Chairman Dawson, seconded by Supervisor Pastor, the Board unanimously tabled this item.

4I. Information/Discussion/Action to review all bids submitted for Invitation for Bids No. 040112-1 for the purchase and delivery of bulk fuel and lubricants; award to the most responsive, responsible and qualified bidder; and authorize the Chairman's signature on the award contract for the winning bidder.

Mr. Heatherly stated that the current contract for the supplier of bulk fuel and lubricants is expiring. He advised that the County went out for bids in May

2012 and after extensive review as well as a review by the County Attorney's Office, it was determined that one of the suppliers had not met all of the required material bid specifications in accordance with the Invitation for Bids in that they did not supply the Oil Price Information Services (OPIS) in their bid response. He stated that based on that information, it is the opinion of the staff and the County Attorney's Office that supplier be excluded from this bid process and that the contract be awarded to Western States Petroleum, Inc. Vice-Chairman Dawson stated, "In years gone by, I've tried to look at and figure out the fuel costs. I wasn't looking at just oil costs, but because we were issued County credit cards, I often wondered is it cheaper to go and buy gasoline at a gas station then it is to fill up at the (County's) bulk stand?...If I'm just looking at the dollars that I'm spending as a taxpayer, how do we protect the best--and I understand that there is fluctuation in the market and that people are in business? In studying this I also inquired as to whether the local business that would be the usual bidder on this has been visited with and given an opportunity to amend or improve their bid and that was not done (by MV Enterprises.) So I think we did our diligence in trying to keep the business here and provide for that." Vice-Chairman Dawson advised that a written comment from the public was submitted to the Board. Supervisor Pastor stated that he would prefer to hear any comments from the public before the Board continued its discussion. Vice-Chairman Dawson then proceeded to read aloud the written comment received from David L. Cook, a resident of Globe, which was as follows: "Please keep in mind that we should keep local jobs local. When the County has an emergency, MV Enterprises is always there and willing and able to help. Another outside-Gila-County business will not be and costs would be more. MV (Enterprises) also serves local contractors. Not awarding them the bid may increase those costs as well locally." Chairman Martin called for any other public comments; none were received. She then inquired if the County has ever requested the OPIS before in its bids and when did the County start requesting same? Mr. Heatherly advised that the existing contract with MV Enterprises, which was finalized in February 2009, has the same exact wording and includes the price for OPIS. Chairman Martin then inquired if the OPIS was used and it's not something new? Mr. Heatherly replied that the contract terms say OPIS pricing. Chairman Martin explained that she was not able to review the Board agenda until Saturday as she was out of the office due to issues pertaining to the forest fire, so she did not have a chance to ask some questions she has and would like some time to get answers before taking action on this item. Chairman Martin stated, "It looks to me like the one that is being recommended is $54,000-$55,000 more and that we're not taking the lowest bid. And then if I add to that what I think are going to be delivery fees because it will allow them to deliver in 4,500-gallon increments and I think the only place that we can take that delivery is there at the new facility. I think we're going to be paying a delivery charge for every other delivery, which it looks like would be $16,000 to add to that $55,000 to start with. I would like to know and it looks to me like by not buying local we're going to wind up not getting another $54,000 or $55,000 in HURF (Highway User Revenue Funds) fees. So when I look at this it

looks to me like we're not picking a supplier that is $55,000 more than the next one and that it's really going to cost us in the $125,000 range and I don't even know if those figures are real. I want some time. I feel like I need another little bit of time before I'm willing to vote one way or the other on this issue because I'm not sure I'm looking at apples to apples. I think I'm looking at apples and oranges in this and I haven't done my homework; I'll readily admit that and I'm just not ready. I'm not ready today to take a position, but if you 2 are, down there, that's different. I'll take your motion and I'll take your second..., but I'll be abstaining because it just looks to me like we're not making the best decision for the taxpayer of Gila County. I'm just not convinced of that. I need some more time for you, Public Works or somebody to show me where this is the best decision." Supervisor Pastor stated, "When this item showed up on the agenda, I made it a point to get with the Finance Manager because I know the local vendor very well. I've known him for several years in my associations with the mines and his business that he would do with us at the mines. I was a little bit concerned and in talking with Finance, I've come to understand that the bid process hasn't changed at all other than the fact that we have started a new process where we have the departments provide the technical information and the Finance Department looks at the financial information on the RFPs (Request for Proposals). One of my concerns was I believe the spreadsheet that you might be referring to about the $55,000 difference in the final figures was explained to me that we're not really comparing apples to apples. We're probably looking at apples and oranges on the spreadsheet because if you'll notice one vendor does use the rack price per the RFP and the other vendor does not use the rack (price) and that's where the problem is. One has followed the letter of the RFP, which hasn't changed from 2008, and I believe the other awards that the local vendor received, I believe were based on that proposal which he (MV Enterprises) did have a rack number that was listed in the last contract. And I would assume they were in the other 2 amendments to the original RFP; is that correct?" Mr. Heatherly stated that he was correct. Supervisor Pastor continued, "So it's not a request for information that is something new and I've been assured that the County has tried to work with the supplier. I was at the Chamber of Commerce dinner where this supplier (MV Enterprises) was honored as the 'Businessman of the Year' and I can understand the concern that they have because it is a very big contract. We've talked to the County Attorney and I believe Bryan (Chambers-Chief Deputy County Attorney) has indicated to us that we run the risk either way of running into some legal concerns whether we award it to the company who followed the proposal versus the company who didn't follow the proposal. So it's kind of a no win situation. I really am concerned that the local vendor didn't this time want to follow the process. It's not something that's out of the ordinary when it comes to the fuel and lubes from what I can understand reading on the OPIS website. It's a pretty standard process that is used, so at this time I'm between you (Chairman Martin) and Vice-Chairman Dawson. So whatever the choice of the Board is I will go for. I believe we've made every effort to provide the opportunity for both vendors to follow the RFP and I think we're at that point where we need to make a decision. Vice-Chairman Dawson stated, "I would

add and I understand that you were busy with the fire and things, but we've gone out to bid. I've been assured that every effort was made to make certain that there was opportunity for this to be corrected or improved upon and I just feel that the bid is here and if we make a habit of saying 'Well gee, my friend,' and I think we all appreciate this family business and what they've done, but requirements are requirements and I don't understand them not meeting those requirements." Chairman Martin stated, "No, me either and I would like to visit with them and see if they understood. I mean I haven't talked to anybody about did we go the extra mile to make sure that they understood and could resubmit? The thing that I appreciate, is that extra $55,000 that we're not going to get in HURF money if we go out of County. It's not just giving local business, although it is that too. As you know I was all for us having where they (the state legislature) passed the bill (inaudible) and the governor in her infinite wisdom vetoed being able to give the locals business, you know to have an advantage. I think that's really important because I think the service that we get from locals exceeds in every way. I can't image in the middle of the winter when we need fuel in Young--I know from the Young end that they'll call and say we're out of fuel and this outfit will have to chain up to take us fuel up there. I don't know what's going to happen otherwise and I don't know what they are going to do when that doesn't happen. As I said I've come into this conversation late. I'm just not happy making a--I'm going to abstain at this stage of the game. The 2 of you I think have had more time to visit with our folks with the management and I haven't. And if I could wave a magic wand we would wait another week or 2 and see if, in fact, there was some kind of miscommunication with the local vendor that I don't know about. I just don't feel comfortable right now making that decision." Vice-Chairman Dawson stated, "I appreciate your comments and with that I will make a motion that we accept the bid for the purchase and delivery of bulk fuel and lubricants awarding that to Western States Petroleum, Inc. as the qualified bidder and authorize the Chairman's signature on the award contract for their bid." Supervisor Pastor stated, "I would second that motion, but before we take a vote I would like a little bit more discussion on the issue." He then asked June Ava Florescue, Deputy County Attorney, if she wished to speak. Ms. Florescue stated, "I have to say that I have not reviewed the contract. Mr. Chambers did and he is not available. I've been told that in reviewing the bid proposals that there was in fact, not complete compliance by the local vendor." She stated that if the Chairman felt she needed more time to review this item, it wouldn't be inappropriate to table this for a week or 2 weeks as opposed to her (Chairman Martin) abstaining from the vote. Supervisor Pastor inquired, "What kind of risk do we run into with the bidder who followed the contract? Do we run into any risk?" Ms. Florescue replied, "I don't think you'll run into risk if you table the decision. There certainly could be a challenge by the bidder who did comply with the proposal if it doesn't get awarded to them. So you get a challenge from either side depending on the decision that you make. You open yourself up to challenges from either side." Vice-Chairman Dawson stated, "My comment is the low bidder did not meet the qualifications. This person was contacted numerous times is my understanding and I've been assured of that

by those in charge. And I just feel like, yes we will hear a lot and I'm sure we'll hear it in a political year, but the fact is they did not meet the requirements and the fact is in years gone by I could not find out what the price was when we were asking." Vice-Chairman Dawson then advised that David Cook, a member of the public, wished to comment. Mr. Cook, a resident of Globe, stated, "One thing I want to make clear on the comments I made earlier…this company, not only does it do these things, but when you get down to the facts of this is that company supplies most fuel for local contractors. It is the only place in this County in the Globe-Miami area that I know where we can get red fuel for our equipment and stuff and tractors and agricultural equipment. What I'm worried about is that when you are in business, and I know, Shirley, that you've been in business before, is that these contracts are the salt and bread and butter of how businesses stay in business. When I watch those Western (States Petroleum) trucks drive up through Gonzales Pass when I'm hauling hay and I realize that those people live and work and pay taxes in another county, they're just trucking the fuel up here. What's going to happen is if you give this contract to somebody who doesn't live here and has no stake in our County, number one, they (MV Enterprises) are the lowest bidder and that's a fact. The paperwork may not be all complete as you wish for that national pricing standard list, but the fact is, they are the lowest bidder and I think that's something you have to take into consideration. What we haven't heard is how many bidders there are. Is there 1 bidder? Have we rejected the other bidder now and said they did not comply? So can you take a bid of one bidder? How come you can't take more information like you did on the asphalt and table this and bring that back? (To Vice-Chairman Dawson) Now me and you can agree on a lot of things and you know that, but what I heard was you have been assured by someone else. (To Supervisor Pastor) What I've heard was you've been assured at a dinner when they were business of the year. So my question is, call them up yourself. You know who they are. Go there and visit with them. Is it because they didn't have 1 piece of paper that's in the contract, but they are in fact the lowest bidder? And if you are looking out for the best interest of the County and the taxpaying citizens, which I hope you all are, then I would think it should be tabled and move on because if you're going to reject them then there's just one bidder, am I correct?" Vice-Chairman Dawson responded by stating, "I didn't take one comment and I don't make a habit when I know that a local car dealership is not the low dealer of calling them up and saying 'change your bid.' I believe that our administration worked hard to try to help get the legal requirements into this bid met and asked for them to be met and they were not." Chairman Martin stated, "I would like to once again have you consider letting me table this, but I have a motion and a second on the floor. Are you ready for me to call for the question on it?" Supervisor Pastor inquired, "If the Board tables this where does that put us as far as awarding the contract? When would we do that?" Vice-Chairman Dawson stated, "There is someone sitting here (Louis Vuksanovich) beside David Cook, who is with MV Enterprises and has not commented. This then becomes, 'Do we do bidding in the back room and manipulating?' I'm sorry, but I understand Tommie why you are asking, but I feel like they've had

plenty of opportunity to make the corrections necessary to come into compliance. And I agree Young often needs--and I know Mitch (Vucksanovich of MV Enterprises) has made trips up there in the winter time. Obviously Mr. Cook has followed the trucks from Western States when they come up. That's their responsibility to carry out. My motion stands." Chairman Martin stated, "With a motion and second on the floor do we need any other discussion? No comments were received. She then called for the vote. Vice-Chairman Dawson and Supervisor Pastor voted "aye" and Chairman Martin abstained from voting. The motion passed with a 2-0 vote with 1 abstention.

ITEM 5 – CONSENT AGENDA ACTION ITEMS:

5A. Approval of Amendment No. 1 to a Funding Agreement (Contract No. 174-10) between the Arizona Department of Housing and the Gila County Division of Community Services, Housing Services, extending the contract end date from May 1, 2012, to July 1, 2012.

5B. Approval of Amendment No. 4 to an Intergovernmental Agreement (Contract No. DE111073001) between the Arizona Department of Economic Security and the Gila County Division of Community Services, Community Action Program, whereby the Arizona Department of Economic Security will provide cumulative reimbursement ceiling funding in the amount of $1,735,780.13 to be used to provide case management and community services to eligible citizens residing in Gila County for the period from July 1, 2010, through June 30, 2015.

5C. Authorization of the Chairman's signature on an Agreement (Contract No. C353) between Gila County and the National Network of Public Health Institutes for the acceptance of a $5,000 grant from the Robert Wood Johnson Foundation, which will be utilized by the Division of Health and Emergency Services to complete a quality improvement project for the period April 1, 2012, through December 31, 2012.

5D. Approval of Grantee Agreement No. GRA-STATE-13-0502-01 between the Arizona Early Childhood Development and Health Board (First Things First) and the Gila County Health Department in the amount of $16,920 for the period July 1, 2012, through June 30, 2013.

5E. Approval of Amendment No. 6 to an Intergovernmental Agreement (Contract No. HG854565) between Gila County and the Arizona Department of Health Services in the amount of $12,000 to provide tuberculosis services for the period July 1, 2012, through June 30, 2013.

5F. Approval of Extension of the Intergovernmental Agreement (IGA) between Yavapai County and Gila County for Restoration to Competency Services for one year from July 1, 2012, to June 30, 2013, under the

same terms and conditions as set forth in the original IGA as agreed upon by both parties.

5G. Approval of Extension of Delegation Agreement No. 06-0020 between Gila County Community Development Division, Gila County Health Division, and the Arizona Department of Environmental Quality (ADEQ) to delegate functions of ADEQ statutes, rules and policies for water quality and solid waste management functions and duties. Agreement previously extended until June 30, 2012, and it has been extended to June 30, 2013, or the effective date of the new agreement, whatever occurs first.

5H. Approval to adopt Resolution No. 12-06-03 authorizing Gila County Probation Department's participation in the FY 2012-2013 Family Counseling Program through the Arizona Supreme Court, Administrative Office of the Courts, Juvenile Justice Services Division, and certifying that a matching fund requirement of $2,305 for the Program will be provided by the County. (A copy of the Resolution is permanently on file in the Board of Supervisors' Office.)

5I. Approval of an Application for Extension of Premises/Patio Permit submitted by Gary Werlinger to temporarily extend the premises where liquor is permitted to be served at the Landmark at the Creek for the period June 29, 2012, through July 8, 2012, for special events.

5J. Approval of an Agreement between Gila County and the Arizona Division of Forestry for the disbursement of $15,000 to Gila County in order to proceed with three environmental projects (that are common to and which impact economic development) in Apache, Gila, Graham, Greenlee and Navajo counties which, were identified by the Environmental Economic Communities Organization on behalf of the counties and submitted to the State Forester who has approved them.

5K. Approval of the April 2012 monthly activity report submitted by the Globe Regional Justice of the Peace.

5L. Approval of the May 2012 monthly activity report submitted by the Globe Regional Justice of the Peace.

5M. Approval of the May 2012 monthly activity report submitted by the Payson Regional Constable's Office.

5N. Approval of the May 22, 2012, and June 5, 2012, BOS regular meeting minutes; and the June 19, 2012, BOS emergency session meeting minutes.

5O. Acknowledgment of contracts under $50,000 which have been approved by the County Manager for the weeks of May 19, 2012, to May

25, 2012; May 26, 2012, to June 1, 2012; and June 2, 2012, to June 8, 2012.

Copies of the contract reports are on file in the Board of Supervisors' Office.

5P. Approval of finance reports/demands/transfers for the weeks of June 12, 2012, June 19, 2012, and June 26, 2012.

June 12, 2012

$2,250,717.51 was disbursed for County expenses by check numbers 246195 through 246380.

June 19, 2012

$632,488.44 was disbursed for County expenses by check numbers 246381 through 246497.

June 26, 2012

$1,704,727.10 was disbursed for County expenses by check numbers 246498 through 246671. **(An itemized list of disbursements is permanently on file in the Board of Supervisors' Office.)**

Upon motion by Supervisor Pastor, seconded by Vice-Chairman Dawson, the Board unanimously approved Consent Agenda action items 5A through 5P.

Item 6 - CALL TO THE PUBLIC: Call to the Public is held for public benefit to allow individuals to address issue(s) within the Board's jurisdiction. Board members may not discuss items that are not specifically identified on the agenda. Therefore, pursuant to Arizona Revised Statute §38-431.01(G), action taken as a result of public comment will be limited to directing staff to study the matter, responding to criticism, or scheduling the matter for further discussion and decision at a future date.

There were no requests to speak from the public.

Item 7 - At any time during this meeting pursuant to A.R.S. §38-431.02(K), members of the Board of Supervisors and the Chief Administrator may present a brief summary of current events. No action may be taken on issues presented.

Each Board member presented information on current events.

There being no further business to come before the Board of Supervisors, Chairman Martin adjourned the meeting at 12:03 p.m.

APPROVED:

_____

Tommie C. Martin, Chairman

ATTEST:

_____

Marian Sheppard, Chief Deputy Clerk

ARF-1363 **4- Y**

Regular BOS Meeting

Meeting Date: 08/07/2012

Reporting Period: Human Resources reports for the weeks of 7/3/12, 7/10/12, 7/17/12, 7/24/12 and 7/31/12.

Submitted For: Berthan DeNero

Submitted By: Candy Bell, Human Resources & Library Services Assistant, Human Resources

---

Information

Subject

Human Resources reports for the weeks of July 3, 2012, July 10, 2012, July 17, 2012, July 24, 2012 and July 31, 2012.

Suggested Motion

Approval of the Human Resources reports for the weeks of July 3, 2012, July 10, 2012, July 17, 2012, July 24, 2012 and July 31, 2012.

Attachments

July Human Resources Summary Report

7/3/12 Human Resources Agenda

7/10/12 Human Resources Agenda

7/17/12 Human Resources Agenda

7/24/12 Human Resources Agenda

7/31/12 Human Resources Agenda

Summary

Human Resources Action Items

	Year To Date	Jan-12	Feb-12	Mar-12	Apr-12	May-12	Jun-12	Jul-12
DEPARTURES FROM COUNTY SERVICE	**94**	7	13	14	13	15	15	17
HIRES TO COUNTY SERVICE	**55**	7	9	14	3	8	4	10
TEMPORARY HIRES TO COUNTY SERVICE	**20**	3	2	1	1	2	10	1
VOLUNTEERS TO COUNTY SERVICE	**87**	0	0	0	0	7	80	0
DEPARTMENTAL TRANSFERS	**25**	1	3	1	6	3	1	10
END PROBATIONARY PERIOD	**29**	3	4	6	5	4	3	4
POSITION REVIEW	**57**	11	13	5	7	6	10	5
REQUEST PERMISSION TO POST	**67**	6	10	7	2	7	20	15
Total Trans	434	**38**	**54**	**48**	**37**	**52**	**143**	**62**

Aug-12 Sep-12 Oct-12 Nov-12 Dec-12

HUMAN RESOURCES ACTION ITEMS
JULY 3, 2012

DEPARTURES FROM COUNTY SERVICE:

1. Robert Hernandez – Board of Supervisors – Temporary Laborer – 05/18/12 – Constituent II Fund – DOH 01/12/12 – Services no longer needed
2. Victoria Wampole – County Attorney – Child Support Case Manager – 06/29/12 – IV D Incentive/SSRE Fund – DOH 04/14/08 – Resignation

HIRES TO COUNTY SERVICE:

3. Jennifer Alvarez – Finance – Buyer – 07/09/12 – General Fund – Replacing Cassandra Villegas

DEPARTMENTAL TRANSFERS:

4. Antonella Campos – Public Fiduciary – From Administrative Clerk – To Public Fiduciary Assistant – 07/05/12 – General Fund – Replacing Jo Anna McDaniel
5. Cassandra Villegas – Finance – From Finance and Purchasing Specialist – To Procurement Administrator – 07/02/12 – General Fund

END PROBATIONARY PERIOD:

6. Amber Martinez – Health & Emergency Services – Animal Regulations Enforcement Officer – 06/12/12 – Rabies Control Fund

REQUEST PERMISSION TO POST:

7. County Attorney – Child Support Case Manager – Position vacated by Victoria Wampole
8. Public Fiduciary – Administrative Assistant – Position vacated by Antonella Campos

SHERIFF'S PERSONNEL ACTION ITEMS

DEPARTURES FROM COUNTY SERVICE:

9. Candace Jorgenson – Sheriff's Office – 911 Dispatch Supervisor – 06/30/12 – General Fund - DOH 04/10/06 – Resignation
10. Stephanie Saiz – Sheriff's Office – 911 Dispatcher – 07/02/12 – General Fund – DOH 04/30/12 – Resignation

HUMAN RESOURCES ACTION ITEMS
JULY 10, 2012

DEPARTURES FROM COUNTY SERVICE:

1. David Caddell – Community Services – GEST Program Manager – 06/25/12 – GEST Fund –DOH 11/29/04 – Resigned
2. Myron Mayr – Community Services – Temporary Davis Bacon Specialist – 07/02/12 – Housing Fund – DOH 09/09/09 – Services no longer needed
3. Thomas Tanner – Public Works Consolidated Roads – Road Maintenance/Equipment Operator – 06/28/12 – Public Works Fund – DOH 03/26/07 – Resigned
4. Francis Cline Jr. – Public Works Engineering – Temporary Engineering Technician – 06/27/12 – Public Works Fund – DOH 06/18/12 – Services no longer needed

HIRES TO COUNTY SERVICE:

5. Amanda Robles – Community Services – Community Services Worker – 07/02/12 – GEST Fund
6. Anita Yanora – Community Services – Community Services Worker – 07/02/12 – GEST Fund
7. Nancy Holland – Community Services – Community Services Worker 07/02/12 – GEST Fund
8. Angela Anthony – Community Services – Community Services Worker – 07/02/12 – GEST Fund
9. Valerie Kaufmann – Community Services – Community Services Worker – 07/02/12 – GEST Fund
10. Samantha Jerome – Health and Emergency Services – Staff Nutritionist – 07/16/12 – WIC Fund

TEMPORARY HIRES TO COUNTY SERVICES:

11. Francis Cline Jr. – Public Works Engineering – Temporary Engineering Technician – 06/18/12 – Public Works Fund

DEPARTMENTAL TRANSFERS:

12. Anna Sanchez – Public Works Consolidated Roads – From Road Maintenance/Equipment Operator – To Administrative Assistant – 07/12/12 – Public Works Fund – Replacing Cecilia Wentz

POSITION REVIEW:

13. Judy Alexander – Probation – Administrative Clerk Senior – 07/2/12 – General Fund – Change from regular full time status to temporary part time status
14. Nancy Mach – Health and Emergency Services – Community Health Assistant – 07/01/12 – Change in position fund codes and hours worked

REQUEST PERMISSION TO POST:

15. County Attorney – Chief Detective – Position vacated by Ernie Meeske
16. Community Services – GEST Program Manager – Position vacated by David Caddell

SHERIFF'S PERSONNEL ACTION ITEMS

REQUEST PERMISSION TO POST:

17. Sheriff's Office – Public Health Nurse – Position vacated by Anjanette Bolinger

HUMAN RESOURCES ACTION ITEMS
JULY 17, 2012

REQUEST PERMISSION TO POST:

1. County Attorney – Deputy County Attorney Senior – Position vacated by Kyle Mann

SHERIFF'S PERSONNEL ACTION ITEMS

DEPARTURES FROM COUNTY SERVICE:

2. Linda Allinson –Sheriff's Office – Administrative Clerk – 06/28/12 – General Fund – DOH 08/16/10 – Resignation
3. Misty Cisneros – Sheriff's Office – Assistant Chief Administrative Officer – 06/29/12 – General Fund – DOH 02/02/09 – Position elimination
4. Craig Smith – Sheriff's Office – Deputy Sheriff (Sgt.) – 06/30/12 – General Fund – DOH 05/19/98 – Resignation
5. Linda Carnahan – Sheriff's Office – Detention Officer – 08/31/12 – General Fund – DOH 05/04/98 – Retirement

REQUEST PERMISSION TO POST:

6. Sheriff's Office – 911 Dispatch Supervisor – Position vacated by Candice Jorgenson
7. Sheriff's Office – Administrative Clerk – Position vacated by Linda Allinson

HUMAN RESOURCES ACTION ITEMS
JULY 24, 2012

DEPARTURES FROM COUNTY SERVICE:

1. Debbie Carl – Probation – Office Supervisor – 07/13/12 – General Fund – DOH 03/24/08 – Resignation
2. Celina Corona – Probation – Surveillance Officer – 07/19/12 – General Fund/Adult Probation Service Fees – DOH 09/04/01 - Resignation

DEPARTMENTAL TRANSFERS:

3. Danielle Toumberlin – Child Support - From Administrative Clerk – To Case Manager – 07/26/12 – From General Fund - To IV-D Incentive/SSRE Fund

REQUEST PERMISSION TO POST:

4. Public Works Auto/Equipment Maintenance – Vehicle and Equipment Mechanic – Position vacated by Kevin Moran
5. Public Works Engineering – Engineering Technician Sr. – Position vacated by Gary Tamietti
6. Recorder – Voter Outreach Assistant – Position vacated by Julie Anderson

SHERIFF'S PERSONNEL ACTION ITEMS

DEPARTURES FROM COUNTY SERVICE:

7. Diana Ortiz – Sheriff's Office – 911 Dispatcher – 06/30/12 – General Fund – DOH 04/06/87 – Retirement

OFFICE TRANSFERS:

8. Christopher Pena – Sheriff's Office - From Deputy Sheriff – To Deputy Sheriff/Task Force Agent – 07/30/12 – From General Fund – To Drug Gang Violent Crime Control Fund

HUMAN RESOURCES ACTION ITEMS
JULY 31, 2012

DEPARTURES FROM COUNTY SERVICE:

1. Anthony Martinez – School Superintendent – Accounting Clerk – 07/23/12 – General Fund – DOH 06/12/06 – Resignation

HIRES TO COUNTY SERVICE:

2. Carolyn Cummings – Finance – Accountant Senior – 07/30/12 – General Fund – Replacing Nicholas Montague
3. Marc Stanley – County Attorney – Law Clerk – 08/09/12 – General Fund – Replacing Kyle Mann
4. Patty Comstock – Public Fiduciary – Administrative Clerk - 08/02/12 – General Fund – Replacing Antonella Campos

DEPARTMENTAL TRANSFERS:

5. Rebecca Baeza – Globe Regional Justice Court – From Justice Court Clerk Senior – To Justice Court Lead – 07/30/12 – General Fund – Replacing Delia Benavidez
6. Leigh Ann Kenton – From Juvenile Detention – To Globe Regional Justice Court – From Juvenile Detention Officer – To Justice Court Clerk Associate – 07/30/12 – General Fund – Replacing Rita Lewis
7. Samson Arney – Public Works Recycling and Landfill Management – From Solid Waste Operations Worker Senior – To Solid Waste Operations Supervisor – 08/02/12 – Solid Waste Fund – Replacing Pete Ortega
8. Debra Overholt – From Finance – To County Attorney – From Payroll Specialist – To Legal Secretary – 07/23/12 – From General Fund – To Diversion Program CA Fund – Replacing Debra Overholt

END PROBATIONARY PERIOD:

9. Nicole Kavanagh – Public Works Facility and Land Management – Administrative Clerk Specialist – 07/23/12 – Facilities Management Fund
10. Erin Elizabeth Maupin – County Attorney – Deputy County Attorney – 06/26/12 – Drug Prosecution Grant Fund

POSITION REVIEW:

11. Kimberly Rust – Globe Regional Constable – Constable Clerk – From part time regular status – To full time regular status – 07/23/12 – General Fund
12. Bertina Pratt- Public Works Facilities – Custodial Assistant – 07/23/12 – Change in position fund codes
13. Mary Mendez – Globe Regional Justice Court – Justice Court Clerk Senior – 07/30/12 – Change in position control number

REQUEST PERMISSION TO POST:

14. Public Works Recycling and Landfill Management – Solid Waste Operation Worker Senior – Position vacated by Samson Arney
15. Finance – Procurement Coordinator
16. School Superintendent – Administrative Assistant – Position vacated by Julia Vasquez
17. School Superintendent – Accounting Clerk – Position vacated by Anthony Martinez

SHERIFF'S PERSONNEL ACTION ITEMS

DEPARTURES FROM COUNTY SERVICE:

18. Nash Marlow – Sheriff's Office – Detention Officer – 07/12/12 – General Fund – DOH 10/10/11 - Failure to complete probationary period

DEPARTMENTAL TRANSFERS:

19. Kristine Feezor – Sheriff's Office – From Administrative Clerk part time – To Administrative Clerk Senior – 07/30/12 – General Fund – Replacing Michelle Keegan

END PROBATIONARY PERIOD:

20. Melissa Kennedy – Sheriff's Office – 911 Dispatcher – 07/05/12 – General Fund

ARF-1370 **4- Z**

Regular BOS Meeting

Meeting Date: 08/07/2012

Reporting Period: Report for County Manager Approved Contracts Under $50,000 for Weeks Ending 7-6-12, 7-13-12, and 7-20-12

Submitted For: Joseph Heatherly

Submitted By: Valrie Bejarano, Contracts Support Specialist, Finance Department

---

Information

Subject

Report for County Manager Approved Contracts Under $50,000 for Weeks Ending 7-6-12, 7-13-12 and 7-20-12

Suggested Motion

Acknowledgment of contracts under $50,000 which have been approved by the County Manager for the weeks of June 30, 2012, to July 6, 2012, July 7, 2012, to July 13, 2012, and July 14, 2012 to July 20, 2012.

Attachments

County Manager Approved Contracts Under $50K for Weeks Ending 7-6-12, 7-13-12, & 7-20-12

Canyon State Wireless Agreement

Hunt Materials Agreement 062112

Arizona Water Co. Agreement 2012-1-AWC

JCG Technologies Agreement

Arizona Commercial Plumbing Agreement 060712

Arizona Public Service Extranet Agreement

Arizona Public Service Line Extension Agreement WFNCOMSVC

Thomas Reprographics Agreement

Buck Mountain Enterprises Agreement 060612

COUNTY MANAGER APPROVED CONTRACTS UNDER $50,000

June 30, 2012, to July 6, 2012

Number / Vendor	Title	Amount	Term	Approved	Renewal Option	Summary
- Canyon State Wireless	Radio Communications Maintenance Agreement	$5,505.00	6-1-12 to 5-31-13	7-3-12	Expires	Radio maintenance services and repair for the Gila County Emergency Management Dept. for 12 months.
062112 Hunt Materials	Cherry Creek Emergency Bridge Cleanout	$7,190.00	7-4-12 to 7-15-12	7-3-12	Renewable for 1 year term	Debris & vegetation cleanout above and below the Cherry Creek Bridge for unobstructed water flow.
2012-1-AWC Arizona Water Co.	Utility Relocation & Reimbursement Agreement	$13,208.00	Until Project Completion	7-3-12	Expires	Relocation of water utilities for the road reconstruction project on Russell Rd., north of Hope Lane.

July 7, 2012, to July 13, 2012

Number / Vendor	Title	Amount	Term	Approved	Renewal Option	Summary
- JCG Technologies	Bench Conference System Superior Court, Amendment #1	$1,520.80	5-1-12 to 7-31-12	7-11-12	Expires	Amendment to agreement for unplanned time and materials installation for Payson Court.
060712 AZ Commercial Plumbing	Sewer Line Replacement Payson Health Dept. Amendment #1	$658.32	7-1-12 to 7-15-12	7-11-12	Expires	Amendment to agreement to add extra excavation due to electrical water and sewer in same ditch.
- Arizona Public Service	APS Agency Guarantee Extranet Agreement	0	7-1-12 to 6-30-12	7-11-12	Renewable for 1 year term	Online billing assistance with APS for CAP low income clients.

July 14, 2012, to July 20, 2012

Number / Vendor	Title	Amount	Term	Approved	Renewal Option	Summary
WFNCOMSVC Arizona Public Service	Line Extension Agreement	$228.50	Until Complete	7-18-12	Expires	APS to extend the electrical line as part of the Payson S.O. Communications electrical upgrade.
- Thomas Reprographics, Inc	OCE Plotwave 300 Printer Maintenance Agreement	$1,680.00	9-1-12 to 8-31-13	7-18-12	Renewable for 1 year term	Renewal of the maintenance agreement for the Public Works & Community Development OCE Plotwave printer.
060612 Buck Mountain Enterprises, Inc.	Sidewalk & ADA Parking Replacement Amendment #1	$754.17	6-6-12 to 7-31-12	7-20-12	Expires	Extra work needed to complete the sidewalk replacement for the Payson Health Dept.

June 1, 2012

Debra Williams, Deputy Director
Gila County Emergency Services
5515 S Apache Ave. Ste. 400
Globe, AZ 85501

RADIO COMMUNICATIONS MAINTENANCE AGREEMENT

The agreement provides maintenance, repair and/or replacement service of mobile, portable and repeater radio equipment located at Globe Arizona. This agreement covers the period from June 1, 2012 through May 31, 2013. The cost is based on the number of radio communications units in service at the monthly rates per the attached schedule dated 6/1/2012 (see M/A Contract attachment). This agreement includes on-site service covering all parts and labor for mobile and portable units listed and will be provided on site Monday through Friday between the hours of 8:00 am to 5:00 pm. This agreement includes on-site service covering all parts and labor for repeaters listed and will be provided on site seven days a week, twenty four hours a day. Pick up and deliverer of mobile and portable equipment is to be provided at the Gila County, Emergency Services facility located in Globe Arizona.

Installations and removals are not included within this agreement, however, will be provided at the prevailing contract rates and billed separately.

This agreement does not cover portable radio batteries, transmission line, radio station/ repeater antennas, radio installation, radio removal or radio programming except for program review/change performed during annual maintenance check.

In consideration of the Radio Communications Maintenance Agreement, Gila County Emergency Services will pay to Canyon State Wireless the following amount.

Monthly: $ 458.75

Annually: $ 5,505.00

Fred Goodwin
Branch Manager
Certified Service Manager

GILA COUNTY

Don E. McDaniel, Jr., County Manager

Date: 7/3/12

8 Corral Rd.
Sierra Vista, AZ 85635
866.458.4772

627 E. Ash St.
Globe, AZ 95501
928.425.5870

1. **Definitions.** For the purpose of brevity and uniformity all references to CSW in this agreement will be construed to mean Canyon State Wireless, Inc., an Arizona Corporation. All references to Licensee shall be construed as meaning and applying to FCC Licensee, or the User, or the Purchaser of the equipment to be serviced by the terms of this agreement.
2. **Work.** Canyon State Wireless (CSW) agrees to provide service for the Licensee of the equipment described on the Maintenance Contract beginning and ending on the dates indicated if the Licensee makes the payments specified. Mobile units will be removed and reinstalled in different vehicles at Licensee's request at the prices prevailing at the time. This agreement does not include service of any transmission line, antenna, tower or tower lighting, unless such work is described on the reverse side to this agreement. Such service may be furnished upon request at mileage, material, and labor rates prevailing at the time of each call. Service shall include the labor and parts required to repair equipment that has become defective through normal wear and usage. Service does not include the repair or replacement of equipment, which has otherwise become defective, including, but not limited to, damage caused by the accidents, physical abuse or misuse of the equipment, acts of God (such as but not limited to; lightning, flood, etc.), and fires. Upon receipt of a written request from Licensee, CSW will maintain units identical with any units covered by this agreement for the same monthly service fees and on the same terms and conditions set forth herein. In the event of loss, damage, theft or removal from service of any units the Licensee shall immediately report said loss, damage or theft or removal to CSW. In this event Licensee's obligation to pay service fees with respect thereto shall terminate at the end of the month in which CSW receives said report.
3. **Service Standards.** The equipment will be serviced by CSW or its preapproved subcontractor in accordance with these standards; (i) CSW parts or parts of equal quality will be used; (ii) oil, water, dust and foreign substances will be removed from the equipment (iii) the equipment will not be subject to mechanical abuse; (iv) the equipment will be serviced at levels necessary to provide the required communications; (v) routine service procedures prescribed from time to time by CSW for its equipment will be followed and (vi) all service work will be done by a qualified person or agency. The equipment will be inspected, adjusted periodically and as often as required.
4. **Time and place of service work.** Service work on the base stations and other fixed equipment shall be performed at the location of the equipment, and the Licensee shall furnish heat, light and power at these locations. Mobile units and removable equipment shall be delivered by the Licensee to the place of service indicated on the attached Maintenance Contract. The Licensee shall give the CSW Service Station at least one days notice prior to delivery of a mobile unit for reinstallation.
5. **Payment.** On or about the date each payment is due as set forth on the attached Maintenance Contract, CSW will send the Licensee an invoice covering the monthly service fees for the next Payment Period plus all other charges for the preceding Payment Period, and the Licensee shall pay the amount of said invoice within twenty (20) days of its date to CSW at the CSW Area Office. Each invoice shall be due and payable whether or not the equipment is operating, and CSW may terminate this agreement by giving the Licensee thirty (30) days notice by certified mail if the Licensee defaults in its payment to CSW. The Licensee shall reimburse CSW for all property taxes, sales and use taxes, excise taxes, and other taxes or assessments now or hereafter imposed the authority of an Federal, State or local law, rule or regulation with respect to the service of the equipment except Federal income and profits taxes of CSW and State income and franchise taxes of CSW.
6. **Revision of fees.** After the "Date Service Ends" indicated on attached Maintenance Contract, CSW may revise the monthly service fees giving the Licensee written notice of the amount of the increase as indicated on the updated Maintenance Contract. Upon receipt of any such notice. Licensee will accept and agree any changes by making the payment in accordance with the CSW invoice. In the event of termination as herein provided, all accrued and unpaid charges shall be due and payable forthwith.
7. **Right to subcontract.** CSW shall have the right to subcontract in whole or in part the service work called for this agreement. However, CSW shall not be relieved of any liability under this agreement on account of a subcontract.CSW will notify the Licensee of the name and address of each subcontractor.
8. **FCC records.** Applications and statements of facts when required by the Federal Communications Commission must be subscribed sworn to by the Licensee, and the Licensee is responsible for meeting FCC requirements. However, CSW will provide the Licensee with forms, advice, and technical assistance, including frequency, modulation, and power measurements, to aide in meeting these requirements.
9. **Automatic renewal.** After the "Date of Service Ends" indicated on the attached Maintenance Contract, this agreement shall continue for successive additional periods of 1 month; provided that either CSW or the Licensee may terminate this agreement on the "Date Service Ends" or thereafter upon 30 days written notice to the other party sent by certified mail to the address indicated hereon.
10. **Interruption of Service.** Canyon State Wireless does not assume and shall have no liability under this agreement for failure to provide or delay in providing service for the equipment due directly or indirectly to causes beyond the control or without the fault or negligence of Communications- Canyon State Wireless including, but not restricted to, acts of God, acts of the public enemy, acts of the United States, any State, Territory of the United States, or any political subdivision of the foregoing, of the district of Columbia acts of the Licensee its agents, employees, or subcontractors, fires, floods, epidemics, quarantine restrictions, strikes, freight embargos, and unusually severe weather conditions, or defaults of Communications- Canyon State Wireless subcontractors due to any such causes.
11. **Laws and Regulations.** This agreement and the rights and obligations of the parties under it are subject to present and future valid orders and valid laws, rules and regulations of duly constituted authorities having jurisdiction.
12. **Waiver.** Failure to delay on the part of Canyon State Wireless or the Licensee to exercise any right, power or privilege hereunder shall not operate as waiver thereof.
13. **Prior negotiations.** This contract constitutes the entire agreement of the parties hereto and shall supersede prior offers, negotiations and agreements.
14. **Amendment.** No revision of this agreement shall be valid unless made in writing and signed by an authorized representative of Canyon State Wireless.
15. **Governing Law.** The laws of The State of Arizona shall be the governing laws for the interpretation of this agreement.
16. **Severability.** If any provision of this agreement is declared null and void, it shall not invalidate the remainder of this agreement which shall remain in full force and effect.

EXHIBIT "A" by mention is made a binding part of this agreement as set forth herein.

M/A Contract

Canyon State Wireless - Globe

M/AContract: GILA EOC

Company: GILA COUNTY DEPT OF EMER MGM

AccountID: GILA-EM

Contract Type: 7 X 24

Contract Notes:

StartDate: 6/1/2012

EndDate: 5/31/2013

MonthlyAmt:$458.75

AnnualAmt: $5,505.00

Unit Summary

Qty	Item	Each	Monthly	Annual
14	H46KDD9PW5	$3.25	$45.50	$546.00
9	AAH25KDF9AA5	$3.25	$29.25	$351.00
6	AAM25KKF9DU6	$3.25	$19.50	$234.00
4	T5365A	$75.00	$300.00	$3,600.00
2	AAH25SDH9DP7	$3.25	$6.50	$78.00
1	T5766A	$45.00	$45.00	$540.00
1	D43MJA7JA5AK	$3.25	$3.25	$39.00
2	D43MJA7DAJCK	$3.25	$6.50	$78.00
1	H01KDC9AA3BN	$3.25	$3.25	$39.00

Unit Details

Item	Serial Number	Description	Location	Monthly Rate
H46KDD9PW5	407CGX0686	XTS2500	EMS	$3.25
H46KDD9PW5	407CGX0687	XTS2500	EMS	$3.25
H46KDD9PW5	407CGX0688	XTS2500	EMS	$3.25
H46KDD9PW5	407CGX0684	XTS2500	EMS	$3.25
H46KDD9PW5	407CGX0682	XTS2500	EMS	$3.25
H46KDD9PW5	407CGX0685	XTS2500	EMS	$3.25
AAH25KDF9AA5	749TDC4952	HT1250	EMS	$3.25
AAM25KKF9DU6	103TDQ4837	CDM1550LS	BT	$3.25
H46KDD9PW5	407CFX1004	XTS2500	EMS	$3.25
H46KDD9PW5	407CJR1983	XTS2500	HS	$3.25
H46KDD9PW5	407CJR1980	XTS2500	HS	$3.25
H46KDD9PW5	407CJR1981	XTS2500	HS	$3.25
H46KDD9PW5	407CJR1979	XTS2500	HS	$3.25
H46KDD9PW5	407CJR1982	XTS2500	HS	$3.25
H46KDD9PW5	407CJR1984	XTS2500	HS	$3.25
H46KDD9PW5	407CGX0683	XTS2500	BT	$3.25
AAM25KKF9DU6	103TEGQ566	CDM1550LS	BT	$3.25
AAM25KKF9DU6	103TEGQ623	CDM1550LS	BT	$3.25
AAM25KKF9DU6	103TEET263	CDM1550LS	EM	$3.25

AAM25KKF9DU6	103TEET267	CDM1550LS	EM	$3.25
AAM25KKF9DU6	103TEET261	CDM1550LS	EM	$3.25
T5365A	448CFF0167	QUANTAR	SIGNAL PEAK	$75.00
T5365A	448CFH0065	QUANTAR	MT. ORD	$75.00
AAH25KDF9AA5	749TDC5330	HT1250	BT	$3.25
AAH25KDF9AA5	749TDC5329	HT1250	BT	$3.25
AAH25KDF9AA5	749TDC5332	HT1250	BT	$3.25
AAH25KDF9AA5	749TDC5321	HT1250	BT	$3.25
AAH25KDF9AA5	749TDC5323	HT1250	BT	$3.25
AAH25KDF9AA5	749TDC5303	HT1250	BT	$3.25
AAH25KDF9AA5	749TDC5322	HT1250	EM	$3.25
AAH25KDF9AA5	749TDC4949	HT1250	EM	$3.25
AAH25SDH9DP7	008TDG0964	HT1250LS	BT	$3.25
AAH25SDH9DP7	008TDL0388	HT1250LS	BT	$3.25
T5766A	512CYZ0072	MTR2000	EM	$45.00
D43MJA7JA5AK	428TZW1731	MAXTRAC	EM	$3.25
D43MJA7DAJCK	154SUC0215	MAXTRAC	EM	$3.25
D43MJA7DAJCK	154SUC0216	MAXTRAC	EM	$3.25
H01KDC9AA3BN	402AUN3570	HT1000	EM	$3.25
T5365A	448CFF0166	QUANTAR		$75.00
T5365A	488CFH0066	QUANTAR		$75.00

Customer: See Cover Document-Radio Maintenance Communications Agreement	
Date: July 17, 2012	

Service Provider:	
Date: 7-2-12	

EXHIBIT "A

Gila County Contractor Standard Terms and Conditions Addendum

A. Addendum Applicability

Contractor and Gila County agree that the terms and conditions of this Addendum shall apply to and govern the contractual relationship between Contractor and Gila County and shall supplement any other contract or agreement entered into between the parties. In the event that the terms and conditions in this Addendum conflict with any provision of any other agreement entered into between the Contractor and Gila County (including a superiority provision similar to this provision), the terms and conditions of this Addendum shall control the contractual relationship between the parties and shall supersede any conflicting provisions found in any other contract or agreement. Contractor understands that acceptance of the terms and conditions contained in this Addendum is a condition precedent to entering into a contractual relationship with Gila County.

B. Contract Defined

As used in this Addendum, the term "Contract" shall refer to any written agreement between Gila County and a person, organization, corporation, company or other entity that provides supplies or services to Gila County regardless of the title or other name applied to that written agreement. The term includes by this reference all the terms and conditions of this Addendum.

C. Contractor Defined

As used in this Addendum, the term "Contractor" shall refer to a person, provider, organization, corporation, company or other entity providing supplies or services to Gila County pursuant to a written agreement regardless of the title or other name applied to "Contractor" in that written agreement.

D. Relationship to Parties

Contractor is an independent contractor of the County. Contractor represents that he has or will secure, at his own expense, all personnel required in performing the services under this contract. Such personnel shall not be employees of or have any contractual relationship with the County. All personnel engaged in work under this contract shall be fully qualified and shall be authorized or permitted under State and local law to perform such services. It is further agreed by Contractor that he shall obey all state and federal statutes, rules, and regulations which are applicable to provisions of the services called for herein. Neither Contractor nor any employee of the Contractor shall be deemed an officer, employee, or agent of the County.

E. Non-Appropriations Clause

Contractor acknowledges that the County is a governmental entity, and the contract validity is based upon the availability of public funding under its authority. In the event that public funds are unavailable and not appropriated for the performance of County's obligations under this contract, then this contract shall automatically expire without penalty to County after written notice to Contractor of the unavailability and non-appropriation of public funds. It is expressly agreed that the County shall only activate this non-appropriation provision as an emergency fiscal measure. The County shall not activate this non-appropriation provision for its convenience, to circumvent the requirements of this contract, or to enable the County to contract with another Contractor for the same supplies or services covered under this Addendum.

F. Hold Harmless/Indemnification Clause

Contractor shall indemnify, defend, save and hold harmless the County of Gila and its officers, officials, agents, and employees (hereinafter referred to as "Indemnitee") from and against any and all claims, actions, liabilities, damages, losses, or expenses (including court costs, attorneys' fees, and costs of claim processing, investigation and litigation) (hereinafter referred to as "Claims") for bodily injury or personal injury (including death), or loss or damage to tangible or intangible property caused, or alleged to be caused, in whole or in part, by the negligent or willful acts or omissions of Contractor or any of its owners, officers, directors, agents, employees or subcontractors. This indemnity includes any claim or amount arising out of or recovered under the Workers' Compensation Law or arising out of the failure of such Contractor to conform to any federal, state or local law, statute, ordinance, rule, regulation or court decree. It is the specific intention of the parties that the Indemnitee shall, in all instances, except for Claims arising solely from the negligent or willful acts or omissions of the Indemnitee, be indemnified by Contractor from and against any and all claims. It is agreed that the Contractor will be responsible for primary loss investigation, defense and judgment costs where this indemnification is applicable. In consideration of the award of this contract, the Contractor agrees to waive all rights of subrogation against the County, its officers, officials, agents and employees for losses arising from the work performed by the Contractor for the County.

G. Entire Contract Clause

The Contractor and the County have read this Contract and agree to be bound by all of its terms, and further agree that it constitutes the entire contract between the two parties and may only be modified by a written mutual contract signed by the parties. No oral provision in conflict with this Contract shall have any force or effect.

H. Non-Waiver of Enforceability

Failure of the County to enforce, at any time, any of the provisions of this Contract, or to request at any time performance by Contractor of any of the provisions hereof, shall in no way be construed to be a waiver of such provisions, nor in any way affect the validity of this contract or any part thereof, or the right of the County to enforce

each and every provision.

I. Governing Law

Both parties agree that this Contract shall be governed by the laws of the state of Arizona. The parties further agree that the jurisdiction for any legal disputes arising out of this Contract shall be the Superior Court of the State of Arizona. The parties agree that even if this Contract does not specifically reference any provision required by state or federal law, those state and federally required provisions are incorporated into this Contract by this reference as though they were specifically listed herein.

J. Cancellation

Cancellation pursuant to A.R.S. §38-511. This contract is subject to the cancellation provisions of A.R.S. §38-511.

K. Anti-Terrorism Warranty

Pursuant to A.R.S. §35-397 the Contractor certifies that it does not have scrutinized business operations in Iran or Sudan and that they are in compliance with the Export Administration Act and not on the Excluded Parties List.

L. Legal Arizona Workers Act Compliance

Contractor hereby warrants that it will at all times during the term of this Contract comply with all federal immigration laws applicable to Contractor's employment of its employees, and with the requirements of A.R.S. § 23-214 (A) (together the "State and Federal Immigration Laws"). Contractor shall further ensure that each subcontractor who performs any work for Contractor under this contract likewise complies with the State and Federal Immigration Laws.

County shall have the right at any time to inspect the books and records of Contractor and any subcontractor in order to verify such party's compliance with the State and Federal Immigration Laws.

Any breach of Contractor's or any subcontractor's warranty of compliance with the State and Federal Immigration Laws, or of any other provision of this section, shall be deemed to be a material breach of this Contract subjecting Contractor to penalties up to and including suspension or termination of this Contract. If the breach is by a subcontractor, and the subcontract is suspended or terminated as a result, Contractor shall be required to take such steps as may be necessary to either self-perform the services that would have been provided under the subcontract or retain a replacement subcontractor as soon as possible so as not to delay project completion.

Contractor shall advise each subcontractor of County's rights, and the subcontractor's

obligations, under this Article by including a provision in each subcontract substantially in the following form: "Subcontractor hereby warrants that it will at all times during the term of this contract comply with all federal immigration laws applicable to Subcontractor's employees, and with the requirements of A.R.S. § 23-214 (A). Subcontractor further agrees that County may inspect the Subcontractor's books and records to insure that Subcontractor is in compliance with these requirements. Any breach of this paragraph by Subcontractor will be deemed to be a material breach of this contract subjecting Subcontractor to penalties up to and including suspension or termination of this contract."

Any additional costs attributable directly or indirectly to remedial action under this Article shall be the responsibility of Contractor.

Tommie C. Martin, District I
P.O. Box 2297 Payson, AZ. 85547
(928) 474-2029

Michael A. Pastor, District II
1400 E. Ash St. Globe, AZ. 85501
(928) 425-3231 Ext. 8753

Shirley L. Dawson, District III
1400 E. Ash St. Globe, AZ. 85501
(928) 425-3231 Ext. 8511

GILA COUNTY
www.gilacountyaz.gov

Don E. McDaniel Jr., County Manager
Phone (928) 425-3231 Ext.8761

Joseph T. Heatherly, Finance Director
Phone (928) 425-3231 Ext. 8743

FAX (928) 425-0319
TTY: 7-1-1

SERVICE AGREEMENT NO. 062112

CHERRY CREEK EMERGENCY BRIDGE CLEANOUT

THIS AGREEMENT, made and entered into this 3rd day of July, 2012, by and between Gila County, a political subdivision of the State of Arizona hereinafter designated the County, and **Hunt Materials**, of the Town of Young, State of Arizona, hereinafter designated the Contractor.

WITNESSETH: The Contractor, for and in consideration of the sum to be paid him by the County, in the manner and at the time hereinafter provided, and of the other covenants and agreement's herein contained, hereby agrees, for himself, his heirs, administrators, successors, and assigns as follows:

ARTICLE 1 – SCOPE OF SERVICES: The Contractor shall provide for the complete provision in the scope of work below in a good and workmanlike and substantial manner and to the satisfaction of the County under the direction of the Gila County Public Works Director or designee.

Scope of Work

Due to the Poco Fire burning in the Cherry Creek drainage near Young, Arizona, there is an increased threat of the upcoming summer rains adversely impacting the Cherry Creek Bridge due to a surge in runoff and debris flow. The County road crews are currently assisting on the fire and are not available to complete this project.

The channel immediately above and below the Cherry Creek Bridge is overgrown with vegetation and the need to remove it is crucial. The Contractor shall clear, grub, and remove the material from the areas shown on the attached "Exhibit A" map. The removal of the vegetation and other material in the channel will provide for water flow to pass under the bridge unobstructed.

The Contractor should have the work completed within two to three days of the County notice to proceed.

Contractor Fee

Below fee includes labor/driver.

Item	Hours	Cost Per Hr	Total
Track Hoe	20	150.00	3,000.00
Loader	18	100.00	1,800.00
10 Wheeler	18	80.00	1,440.00
End Dump	10	95.00	950.00
TOTAL			7,190.00

ARTICLE 2 – TERMINATION: The County reserves the right to terminate the Contract, in whole or in part at any time, when in the best interest of the County, without penalty or recourse. Upon receipt of the written notice, the Contractor shall stop all work as directed in the notice. If the contract is terminated, the County shall be liable only for the services rendered under this contract and accepted material received by the County before the effective date of termination.

ARTICLE 3 - INDEMNIFICATION: Contractor shall indemnify, defend, save and hold harmless the County of Gila and its officers, officials, agents, and employees (hereinafter referred to as "Indemnitee") from and against any and all claims, actions, liabilities, damages, losses, or expenses (including court costs, attorneys' fees, and costs of claim processing, investigation and litigation) (hereinafter referred to as "Claims") for bodily injury or personal injury (including death), or loss or damage to tangible or intangible property caused, or alleged to be caused, in whole or in part, by the negligent or willful acts or omissions of Contractor or any of its owners, officers, directors, agents, employees or subcontractors. This indemnity includes any claim or amount arising out of or recovered under the Workers' Compensation Law or arising out of the failure of such contractor to conform to any federal, state or local law, statute, ordinance, rule, regulation or court decree. It is the specific intention of the parties that the Indemnitee shall, in all instances, except for Claims arising solely from the negligent or willful acts or omissions of the Indemnitee, be indemnified by Contractor from and against any and all claims. It is agreed that Contractor will be responsible for primary loss investigation, defense and judgment costs where this indemnification is applicable. In consideration of the award of this contract, the Contractor agrees to waive all rights of subrogation against the County, its officers, officials, agents and employees for losses arising from the work performed by the Contractor for the County.

ARTICLE 4 – INSURANCE REQUIREMENTS: Contractor and subcontractors shall procure and maintain until all of their obligations have been discharged, including any warranty periods under this Contract are satisfied, insurance against claims for injury to persons or damage to property which may arise from or in connection with the performance of the work hereunder by the Contractor, his agents, representatives, employees or subcontractors.

The insurance requirements herein are minimum requirements for this Contract and in no way limit the indemnity covenants contained in this Contract. The County in no way warrants that the minimum limits contained herein are sufficient to protect the Contractor from liabilities that might arise out of the performance of the work under this contract by the Contractor, his agents, representatives, employees or subcontractors and Contractor is free to purchase additional insurance as may be determined necessary.

A. **MINIMUM SCOPE AND LIMITS OF INSURANCE:** Contractor shall provide coverage with limits of liability not less than those stated below.

1. **Commercial General Liability – Occurrence Form**
   Policy shall include bodily injury, property damage and broad form contractual liability coverage.

• General Aggregate	$2,000,000
• Products – Completed Operations Aggregate	$1,000,000
• Personal and Advertising Injury	$1,000,000
• Each Occurrence	$1,000,000

   a. The policy shall be endorsed to include the following additional insured language: **"The County of Gila shall be named as an additional insured with respect to liability arising out of the activities performed by, or on behalf of the Contractor".**

2. **Worker's Compensation and Employers' Liability**

Workers' Compensation	Statutory
Employers' Liability	
Each Accident	$100,000
Disease – Each Employee	$100,000
Disease – Policy Limit	$500,000

   a. Policy shall contain a **waiver of subrogation** against the County of Gila.

B. **ADDITIONAL INSURANCE REQUIREMENTS:** The policies shall include, or be endorsed to include, the following provisions:

1. On insurance policies where the County of Gila is named as an additional insured, the County of Gila shall be an additional insured to the full limits of liability purchased by the Contractor even if those limits of liability are in excess of those required by this Contract.
2. The Contractor's insurance coverage shall be primary insurance and non-contributory with respect to all other available sources.
3. Coverage provided by the Contractor shall not be limited to the liability assumed under the indemnification provisions of this Contract.

C. **NOTICE OF CANCELLATION:** Each insurance policy required by the insurance provisions of this Contract shall provide the required coverage and shall not be suspended, voided, canceled, reduced in coverage or endorsed to lower limits except after thirty (30) days prior written notice has been given to the County. Such notice shall be sent directly to **Gila County Purchasing, 1400 E. Ash St., Globe, AZ, 85501** and shall be sent by certified mail, return receipt requested.

D. **ACCEPTABILITY OF INSURERS:** Insurance is to be placed with insurers duly licensed or approved unlicensed companies in the state of Arizona and with an "A.M. Best" rating of not less than B+ VI. The County in no way warrants that the above-required minimum insurer rating is sufficient to protect the Contractor from potential insurer insolvency.

E. **VERIFICATION OF COVERAGE:** Contractor shall furnish the County with certificates of insurance (ACORD form or equivalent approved by the County) as required by this Contract. The certificates for each insurance policy are to be signed by a person authorized by that insurer to bind coverage on its behalf.

All certificates and endorsements are to be received and approved by the County before work commences. Each insurance policy required by this Contract must be in effect at or prior to commencement of work under this Contract and remain in effect for the duration of the project. Failure to maintain the insurance policies as required by this Contract or to provide evidence of renewal is a material breach of contract.

All certificates required by this Contract shall be sent directly to **Gila County Purchasing, 1400 E. Ash St., Globe, AZ, 85501.** The County project/contract number and project description shall be noted on the certificate of insurance. The County reserves the right to require complete, certified copies of all insurance policies required by this Contract at any time.

F. **SUBCONTRACTORS:** Contractors' certificate(s) shall include all subcontractors as additional insured's under its policies **or** Contractor shall furnish to the County separate certificates and endorsements for each subcontractor. All coverage's for subcontractors shall be subject to the minimum requirements identified above.

G. **APPROVAL:** Any modification or variation from the insurance requirements in this Contract shall be made by the County Attorney, whose decision shall be final. Such action will not require a formal Contract amendment, but may be made by administrative action.

ARTICLE 5 – LEGAL ARIZONA WORKERS ACT COMPLIANCE: Contractor hereby warrants that it will at all times during the term of this Contract comply with all federal immigration laws applicable to Contractor's employment of its employees, and with the requirements of A.R.S. § 23-214 (A) (together the "State and Federal Immigration Laws"). Contractor shall further ensure that each subcontractor who performs any work for Contractor under this contract likewise complies with the State and Federal Immigration Laws. County shall have the right at any time to inspect the books and records of Contractor and any subcontractor in order to verify such party's compliance with the State and Federal Immigration Laws.

Any breach of Contractor's or any subcontractor's warranty of compliance with the State and Federal Immigration Laws, or of any other provision of this section, shall be deemed to be a material breach of this Contract subjecting Contractor to penalties up to and including suspension or termination of this Contract. If the breach is by a subcontractor, and the subcontract is suspended or terminated as a result, Contractor shall be required to take such steps as may be necessary to either self-perform the services that would have been provided under the subcontract or retain a replacement subcontractor as soon as possible so as not to delay project completion.

Contractor shall advise each subcontractor of County's rights, and the subcontractor's obligations, under this Article by including a provision in each subcontract substantially in the following form: "Subcontractor hereby warrants that it will at all times during the term of this contract comply with all federal immigration laws applicable to Subcontractor's employees, and with the requirements of A.R.S. § 23-214 (A). Subcontractor further agrees that County may inspect the Subcontractor's books and records to insure that Subcontractor is in compliance with these requirements. Any breach of this paragraph by Subcontractor will be deemed to be a material breach of this contract subjecting Subcontractor to penalties up to and including suspension or termination of this contract."

Any additional costs attributable directly or indirectly to remedial action under this Article shall be the responsibility of Contractor. In the event that remedial action under this Article results in delay to one or more tasks on the critical path of Contractor's approved construction or critical milestones schedule, such period of delay shall be deemed excusable delay for which Contractor shall be entitled to an extension of time, but not costs.

ARTICLE 6 – LAWS AND ORDINANCES: This agreement shall be enforced under the laws of the State of Arizona. Contractor shall maintain in current status all Federal, State and Local licenses and permits required for the operation of the business conducted by the Contractor. The Contractor shall comply with the applicable provisions of the Americans with Disabilities Act (Public Law 101-336, 42 U.S.C. 12101-12213) and applicable federal regulations under the Act.

ARTICLE 7– ANTI-TERRORISM WARRANTY: Pursuant to A.R.S. § 35-393.06(B) and 35-301.06(A) the Contractor certifies that it does not have scrutinized business operations in Iran or Sudan and that they are in compliance with the Export Administration Act and not on the Excluded Parties List.

ARTICLE 8 – CANCELLATION: This agreement is subject to cancellation pursuant to A.R.S. §38-511. If the Agreement is terminated, the county shall be liable only for payment for services rendered and accepted material received by the County before the effective date of termination.

ARTICLE 9 – RELATIONSHIP OF THE PARTIES: Contractor is an independent contractor of the County. Contractor represents that he has or will secure, at his own expense, all personnel required in performing the services under this contract. Such personnel shall not be employees of or have any contractual relationship with the County. All personnel engaged in work under this contract shall be fully qualified and shall be authorized or permitted under State and local law to perform such services. Contractor warrants that he has obtained or will obtain Worker's Compensation Insurance for his employees working on this contract and that any subcontractors will likewise obtain Worker's Compensation Insurance for of their employees working on this contract. It is further agreed by Contractor that he shall obey all state and federal statutes, rules, and regulations which are applicable to provisions of the services called for herein. Neither Contractor nor any employee of the Contractor shall be deemed an officer, employee, or agent of the County.

ARTICLE 10 – NON-APPROPRIATIONS CLAUSE: Contractor acknowledges that the County is a governmental entity, and the contract validity is based upon the availability of public funding under its authority. In the event that public funds are unavailable and not appropriated for the performance of County's obligations under this contract, then this contract shall automatically expire without penalty to County after written notice to Contractor of the unavailability and non-appropriation of public funds. It is expressly agreed that the County

shall only activate this non-appropriation provision as an emergency fiscal measure. The County shall not activate this non-appropriation provision for its convenience, to circumvent the requirements of this contract, or to enable the County to contract with another Contractor for the same supplies or services covered under this Addendum.

ARTICLE 11 – ENTIRE CONTRACT CLAUSE: The Contractor and the County have read this Contract and agree to be bound by all of its terms, and further agree that it constitutes the entire contract between the two parties and may only be modified by a written mutual contract signed by the parties. No oral agreement or oral provision outside this Contract shall have any force or effect.

ARTICLE 12 – NON-WAIVER OF ENFORCEABILITY: Failure of the County to enforce, at any time, any of the provisions of this Contract, or to request at any time performance by Contractor of any of the provisions hereof, shall in no way be construed to be a waiver of such provisions, nor in any way affect the validity of this contract or any part thereof, or the right of the County to enforce each and every provision

ARTICLE 13 – GOVERNING LAW: Both parties agree that this Contract shall be governed by the laws of the state of Arizona. The parties further agree that the jurisdiction for any legal disputes arising out of this Contract shall be the Superior Court of the State of Arizona. The parties agree that even if this Contract does not specifically reference any provision required by state or federal law, those state and federally required provisions are incorporated into this Contract by this reference as though they were specifically listed herein.

ARTICLE 14– TERM: The term of the agreement shall commence date signed by County Manager and shall remain in effect until July 15, 2012.

ARTICLE 15 – PAYMENT/BILLING: Contactor shall be paid a flat fee of **$ 7,190.00** for completion of the project outlined in the Scope of Services.

All invoices shall be submitted to Gila County Accounts Payable, 1400 E. Ash St, Globe, Arizona and include the following information:

- Purchase Order Number
- Contract Number
- Invoice Number
- Service Location
- Vendor Name and Address
- Description of Service

Any alterations to the scope of work resulting in a change in cost must have prior written approval by the County. Any unauthorized work may result in non-payment to the vendor.

Gila County employs a "Net 15" payment term for services meaning the payment will be issued fifteen (15) days from the date the County receives the invoice from the Contractor. Purchase orders sent to the Contractor reflect these terms and conditions.

The Contractor shall have a current I.R.S. W-9 form on file with the County unless not required by law. The County shall not remit payment if the Contractor does not have a current W-9.

IN WITNESS WHEREOF, Service Agreement No. 062112 has been duly executed by the parties hereinabove named, on the date and year first above written.

GILA COUNTY

Don E. McDaniels, Jr., County Manager

Date: 7/3/12

HUNT MATERIALS

Authorized Signature

Jeff Hunt

Print Name

Date: 6/20/12

EXHIBIT "A"

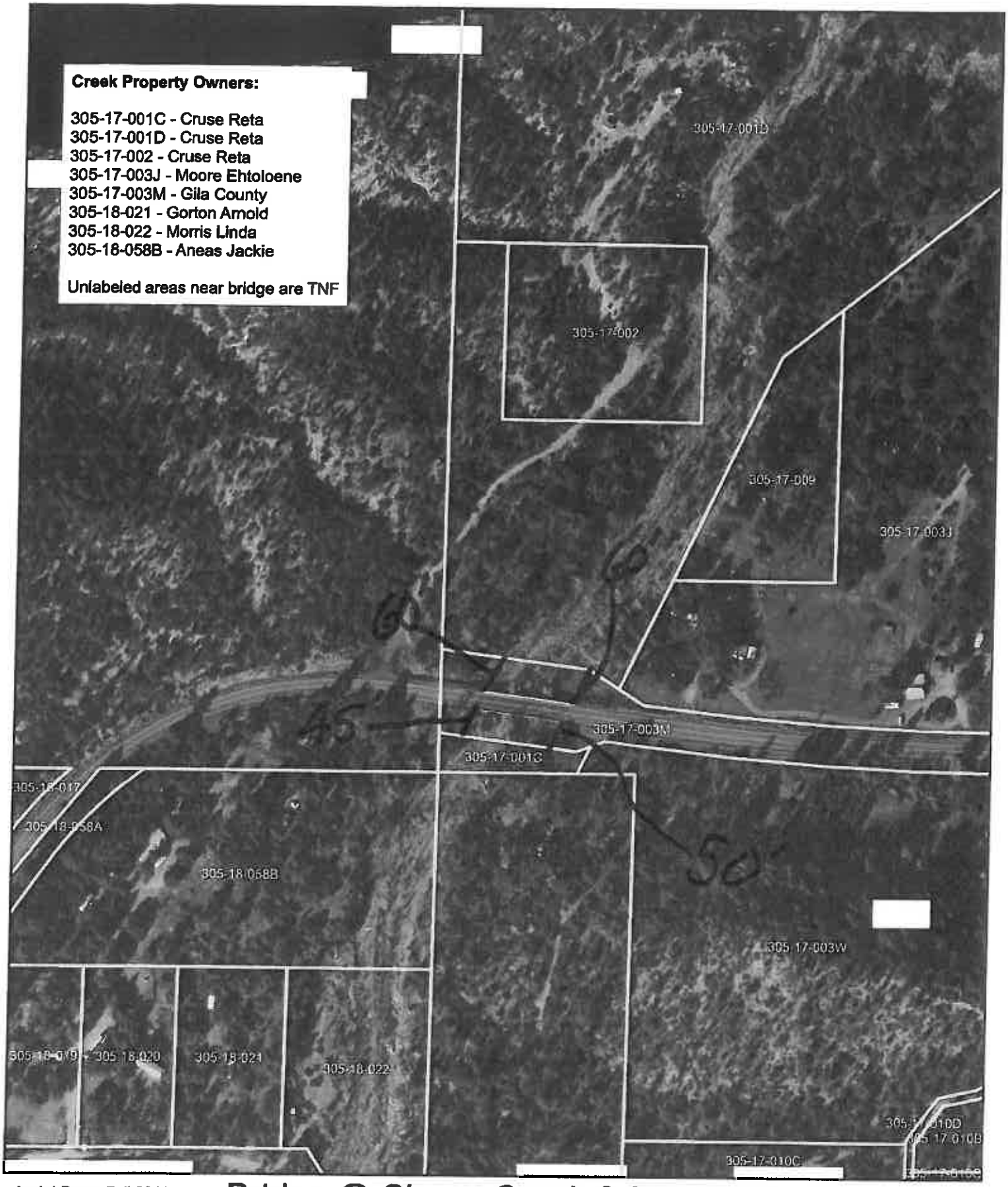

Aerial Date: Fall 2011

Bridge @ Cherry Creek & 512 Road

0 125 250 500 750 1,000 Feet

N

UTILITY RELOCATION
AND REIMBURSEMENT AGREEMENT

Between

GILA COUNTY

And

ARIZONA WATER COMPANY

Agreement No. :	2012-1-AWC
CONSTRUCTION TRACS No.:	
PROJECT NO. :	
Location :	**Russell Road NW ¼ SEC. 27 T. 1 N. R. 15 E.**

THIS AGREEMENT is made between GILA COUNTY, an Arizona political subdivision, ("COUNTY"), and ARIZONA WATER COMPANY, an Arizona corporation ("UTILITY").

All lettered exhibits are incorporated and made a part of this agreement by reference and attachment regardless of designation or alphabetical order.

INDEX

Section		Page
I.	RECITALS	3
II.	DEFINITIONS	3-4
III.	CONSTRUCTION	4
	A. Construction Requirements	4
	1. COUNTY to Provide for Relocation of Utility's Facilities	4
	2. Maintenance	4
	3. Joint Occupancy	4
	B. Traffic	4-5
	C. Start/Completion Date	5
	D. Subcontracting	5
	E. Blue Stake	5
	F. The Acceptance Date	5
	G. Prior Rights	5
IV.	SCHEDULES AND PAYMENTS	5
	A. UTILITY CONSTRUCTION Schedule	5
	B. Payments	5-6
	1. Changes in Scope of Work	6
	2. Submission of Invoices	6
	3. Payment of Invoices	6
V.	LIABILITY	6
VI.	RECORDS RETENTION AND AUDIT	6
VII.	MISCELLANEOUS CONDITIONS	6
	A. Communication for this AGREEMENT	6
	B. AGREEMENT Content and Modification	6-7
	C. Laws	7
	D. Breach of AGREEMENT	7
	Signature & Notary Public Page	8

Exhibit "A" Cost Estimate
Exhibit "B" Plans for Relocation

I. RECITALS:

The purpose of this agreement is to enable COUNTY to complete a roadway construction project. In order to complete this project, it is necessary for UTILITY to RELOCATE and/or improve existing UTILITY facilities.

UTILITY'S facilities to be relocated have PRIOR RIGHTS.

COUNTY has requested its contractor to perform the necessary relocations as part of the COUNTY contract. The work will consist of trenching, providing, and placing ductile iron pipe, in an existing County right of way, located along Russell Road, north of Hope Lane. UTILITY and COUNTY agree that doing this work in conjunction with the COUNTY contract will greatly minimize the impact to the traveling public by eliminating multiple closures and duplication of effort.

II. DEFINITIONS:

A. COUNTY means the GILA COUNTY.

B. COUNTY EMERGENCY means a utility failure, which affects the safety of the motorist or the highway.

C. AGREEMENT means this specific agreement and all attachments incorporated by reference.

D. A.R.S. means Arizona Revised Statutes.

E. BETTERMENT means increased capacity or size of UTILITY'S facilities.

F. CONSTRUCTION PROJECT NO. means the roadway construction project number utilized for COUNTY'S construction PROJECT.

G. CONSTRUCTION TRACS NO. means the roadway construction Accounting number utilized for the Gila County Public Works project.

H. CONTROLLED ACCESS means locations where owners or occupants of abutting lands and other persons have no legal right of access, e.g., freeway lanes and freeway ramps.

I. MUTCD means the "Manual on Uniform Traffic Control Devices" and any amendments and/or revisions thereto.

J. PRIOR RIGHTS means the possession of a right, title or property interest that would require payment of UTILITY'S RELOCATION cost by the COUNTY.

K. PROJECT means this COUNTY roadway construction project.

L. RELOCATE or RELOCATION means to move, adjust, or modify UTILITY'S facility to avoid conflict with PROJECT construction, by replacement, removal or otherwise.

M. RELOCATED FACILITIES means the facilities so moved or adjusted.

N. UTILITY means ARIZONA WATER COMPANY.

O. UTILITY EMERGENCY means any failure or condition affecting UTILITY'S relocated facilities that has a substantial effect on UTILITY'S functions and requires immediate action to remedy the failure or condition.

P. WORK means engineering, design, preparation of plans, specifications, construction labor, materials and equipment called for in the AGREEMENT, including approved changes in scope.

Q. WORKING DAY means a calendar day, exclusive of Saturdays, Sundays and COUNTY recognized holidays, on which weather conditions permit UTILITY'S construction operations to proceed for a major part of the day with the normal working force.

III. CONSTRUCTION:

A. **Construction Requirements.** COUNTY shall furnish all necessary engineering, design, plans, details and specifications covering the RELOCATION of and/or adjustments to its existing facilities in accordance with UTILITY'S plans marked "EXHIBIT B" hereto.

1. **COUNTY to Provide for the Relocation of UTILITY'S Facilities.** COUNTY will provide in its contract with COUNTY's contractor for the contractor to RELOCATE UTILITY'S facilities and/or construct BETTERMENTS. COUNTY further agrees that COUNTY's contractor will comply with all of UTILITY'S construction and design specifications for UTILITY'S water system, copies of which UTILITY has provided to COUNTY for COUNTY's use in bidding and designing the PROJECT.

2. **Maintenance.** Maintenance operations and associated costs for UTILITY'S facilities covered by and relocated pursuant to the AGREEMENT will be the responsibility of UTILITY.

3. **Joint Occupancy.** UTILITY understands COUNTY's and all of its agents' right to construct, maintain and operate highway facilities over/under UTILITY'S facilities within the highway right-of-way. COUNTY retains the right to permit other occupancies as long as such occupancies do not interfere with UTILITY'S PRIOR RIGHT FACILITIES.

B. **Traffic.** UTILITY shall not maintain, construct, reconstruct, inspect or operate any of its facilities within the CONTROLLED ACCESS right-of-way. In case of a COUNTY EMERGENCY involving UTILITY'S facilities UTILITY shall have reasonable use of the roadway notwithstanding the foregoing restriction. In case of a UTILITY EMERGENCY, UTILITY shall have use of COUNTY right of way outside the highway traffic lanes or ramps as it reasonably deems necessary to correct, repair, replace or reconstruct facilities affected by UTILITY EMERGENCY. UTILITY shall, as soon as practical during any COUNTY EMERGENCY or UTILITY EMERGENCY repairs, notify COUNTY Maintenance Supervisor at (928) 286-1260 and provide appropriate safety devices to protect the highway user as set forth

in the MUTCD (Including all official changes thereto), for all work within COUNTY right of way.

C. **Start/Completion Date**. The RELOCATION will be accomplished during the PROJECT construction by COUNTY.

D. **Subcontracting**. The RELOCATION will be performed by COUNTY's contractor and/or subcontractor.

E. **Blue Stake**. For WORK performed by COUNTY's contractor for the PROJECT, it is understood that COUNTY is acting as a third party on behalf of UTILITY, administering the construction of UTILITY'S facilities. At no time is COUNTY to be considered the owner of, or locator for, UTILITY'S facilities. COUNTY's contractor for the PROJECT shall locate any underground facilities installed by COUNTY's contractor (or subcontractor of any tier) for COUNTY PROJECT as prescribed by A.R.S. §40-360.21 through §40-360.29, until (i) the PROJECT is accepted by COUNTY and COUNTY has given UTILITY one month's prior notice or (ii) until the time the facility is tested and placed into service by UTILITY, at which time (whichever is earlier) UTILITY shall assume Blue Staking responsibility. The transfer of Blue Stake responsibility to UTILITY shall not affect UTILITY'S rights to inspect the RELOCATED FACILITIES, to require correction of any defects, or any other rights under his AGREEMENT.

F. **The Acceptance Date**. The acceptance date of this AGREEMENT shall be the day on which the last party executes the AGREEMENT.

G. **PRIOR RIGHTS**. COUNTY and UTILITY AGREE over UTILITY'S claim of PRIOR RIGHTS and COUNTY'S payment responsibilities for UTILITY'S facilities included as part of the PROJECT and as shown on the attached plans (Exhibit B). The planned improvements include RELOCATION work due to conflicts with COUNTY's PROJECT and BETTERMENTS or upgrades to UTILITY'S water system as desired by UTILITY. The parties agree that incremental or differential costs for BETTERMENTS or upgraded facilities shall be borne solely by UTILITY. The parties also agree an estimated three thousand three hundred ten dollars and no cents ($3,310) is to be paid by COUNTY to UTILITY on or before the Acceptance Date, in accordance with Section IV SCHEDULES AND PAYMENTS, Subsection B. PAYMENTS, paragraph 3, Payment of Invoices, to insure that the PROJECT will move forward to meet the scheduled bid advertisement date.

IV. SCHEDULES AND PAYMENTS:

A. **UTILITY CONSTRUCTION Schedule**. Any service connections and system startup are UTILITY'S responsibility and will accommodate the PROJECT construction schedule. COUNTY will coordinate with UTILITY for UTILITY'S system start-up. COUNTY will provide UTILITY advanced notice of required start-up dates.

B. **Payments**. COUNTY will be responsible for and will pay directly to COUNTY's contractor the cost of RELOCATION for all facilities and any WORK performed by COUNTY for RELOCATION of UTILITY facilities. The estimated total cost for RELOCATION is set forth in EXHIBIT "A". COUNTY will be responsible for and will pay directly to COUNTY's contractor UTILITY'S total cost of RELOCATION and any work performed by COUNTY for

RELOCATION of UTILITY'S facilities, and UTILITY will have no responsibility for any of COUNTY's costs for such work.

1. **Changes in Scope of Work.** In the event conditions or circumstances require a change in the scope of work on the RELOCATION and/or BETTERMENT as set forth in EXHIBIT "B", each party shall first agree in writing to the changes, including payment responsibilities prior to doing the work.

2. **Submission of Invoices.** Following completion of the PROJECT, UTILITY will determine the final total cost of the RELOCATION work. If UTILITY'S final total cost of the work differs from the estimated amount previously paid by COUNTY, UTILITY will refund the amount of overpayment, or will invoice COUNTY for the additional amount due. UTILITY will make any such refund within ninety (90) calendar days after completion of the PROJECT.

3. **Payment of Invoices.** Unless it has paid UTILITY for RELOCATION before the Acceptance Date per paragraph III.G, above, COUNTY shall include payment in the amount of three thousand three hundred ten dollars and no cents ($3,310) as set forth in EXHIBIT "A" when it returns this AGREEMENT to UTILITY for final execution. COUNTY agrees to pay UTILITY the additional amount due within ninety (90) days of receipt of the final invoice, however, such payment shall not be deemed a waiver of UTILITY'S rights as provided in paragraph 1.

V. LIABILITY:

Liability. COUNTY and UTILITY each agree to be liable to the other party for their own acts of negligence and the negligence of its employees.

VI. RECORDS RETENTION AND AUDIT: All books accounts, reports, files and other records relating to this contract shall be subject at reasonable times to inspection and audit by COUNTY for five (5) years after the receipt of final payment. Such records shall be produced by UTILITY during normal business hours at any COUNTY office as designated by COUNTY. At COUNTY's discretion said inspection and audit may be held at UTILITY'S office during normal business hours. COUNTY shall conduct its inspection and audit at its expense, including UTILITY'S audit costs.

VII. MISCELLANEOUS CONDITIONS:

A. **Communication for this AGREEMENT**. Communication required to be given pursuant to this AGREEMENT shall be:

Gila County Public Work Division
Attn: Mr. Steve Stratton
745 N. Rose Mofford Way
Globe, AZ 85501

Arizona Water Company
Fredrick K. Schneider, V.P. - Engineering
P.O. Box 29006
Phoenix, AZ 85038-9006
Phone: 602-240-6860
Facsimile: 602-240-6878

B. **AGREEMENT Content and Modification**. This AGREEMENT, including any schedules, exhibits or attachments hereto, constitutes the entire agreement between the parties,

and no understanding or obligation not expressly set forth herein shall be binding upon them. No modification, amendment or alteration of this AGREEMENT shall be valid unless it is in writing and signed by both parties.

C. **Laws**. This AGREEMENT shall be governed by the laws of the State of Arizona.

D. **Breach of AGREEMENT**. The waiver by either party of any breach or failure to provide full performance under any of the terms or conditions of this AGREEMENT shall not be construed as a waiver of any other term or condition, or of any subsequent breach of the same or any other term or condition.

IN WITNESS WHEREOF, the parties hereto have executed this AGREEMENT.

ARIZONA WATER COMPANY

By: _____

Its: _____

Date: _____

GILA COUNTY

By: _____

Its: COUNTY MANAGER

Date: 7/3/12

ACKNOWLEDGMENT BY UTILITY

STATE OF _____)
) ss
COUNTY OF _____)

The foregoing instrument was acknowledged before me this ____ day of _____, 2012, by _____, the _____ on behalf of the corporation.

My Commission Expires:

_____

_____
Notary Public

ACKNOWLEDGMENT BY COUNTY

STATE OF Arizona)
) ss
COUNTY OF Gila)

The foregoing instrument was acknowledged before me this 3rd day of July, 2012, by Don E. McDaniel, the County Manager on behalf of the corporation.

My Commission Expires:
April 15, 2013

Sherry L. Grice
Notary Public

SHERRY L GRICE
Notary Public - Arizona
Gila County
My Comm. Expires Apr 15, 2013

EXHIBIT A

ARIZONA WATER COMPANY
PRELIMINARY COST ESTIMATE

PREPARED BY: JW	APPROVED BY:	SYSTEM: SS (MI)	DIVISION: SS
NAME OF APPLICANT: Gila County		PE #	WA #

DATE PREPARED: 6/5/12

PROPERTY DESCRIPTION: Lower and replace approximately 50 LF of 4" CA water main with 6" DIP water main along Russell Road, North of Hope Lane to accommodate the Gila County road improvement project along Russell Road

MATERIALS AND LABOR			ESTIMATED PROJECT COST	
ACCOUNT	QUANTITY	DESCRIPTION	ADVANCE FOR CONSTRUCTION	NON-REFUNDABLE CONTRIBUTION
343	50	Lower and replace existing 4" CA water main		$ 6,350
343	24	Install 16" steel casing		2,760
343	1	Contracting tax		500
(1) SUBTOTAL - MATERIALS AND LABOR			$ -	$ 9,610
(2) PERFORMANCE BOND @ 3% OF LINE (1)			-	288
→ (3) FIELD INSPECTION				1,100
(4) SUBTOTAL - LINES (1), (2) AND (3)			$ -	$ 10,998
→ (5) OVERHEAD - 11% OF LINE (4)			-	1,210
→ (6) REVIEW OF DETAILED PLANS, SPECIFICATIONS, AND COST ESTIMATES				1,000
SUBTOTAL - LINES (4), (5) AND (6)			$ -	$ 13,208
ESTIMATED COST OF CONSTRUCTION			$	13,208

AFH

→ AMOUNT DUE AND PAYABLE TO ARIZONA WATER COMPANY $3310

EXHIBIT B

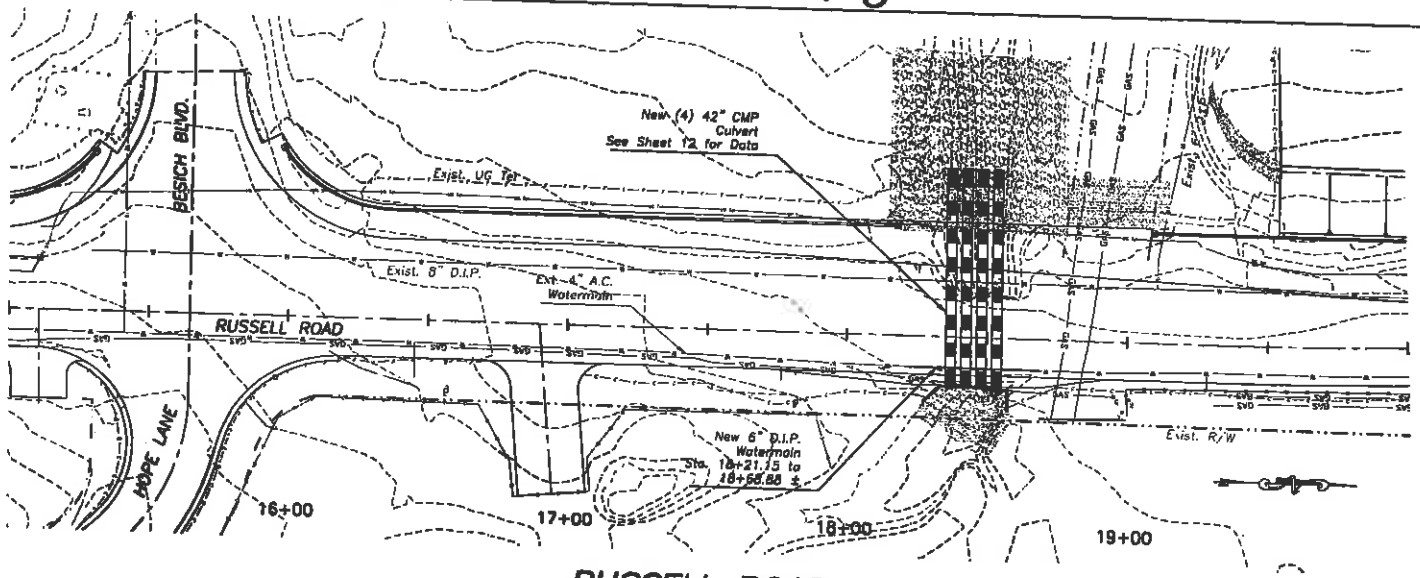

RUSSELL ROAD

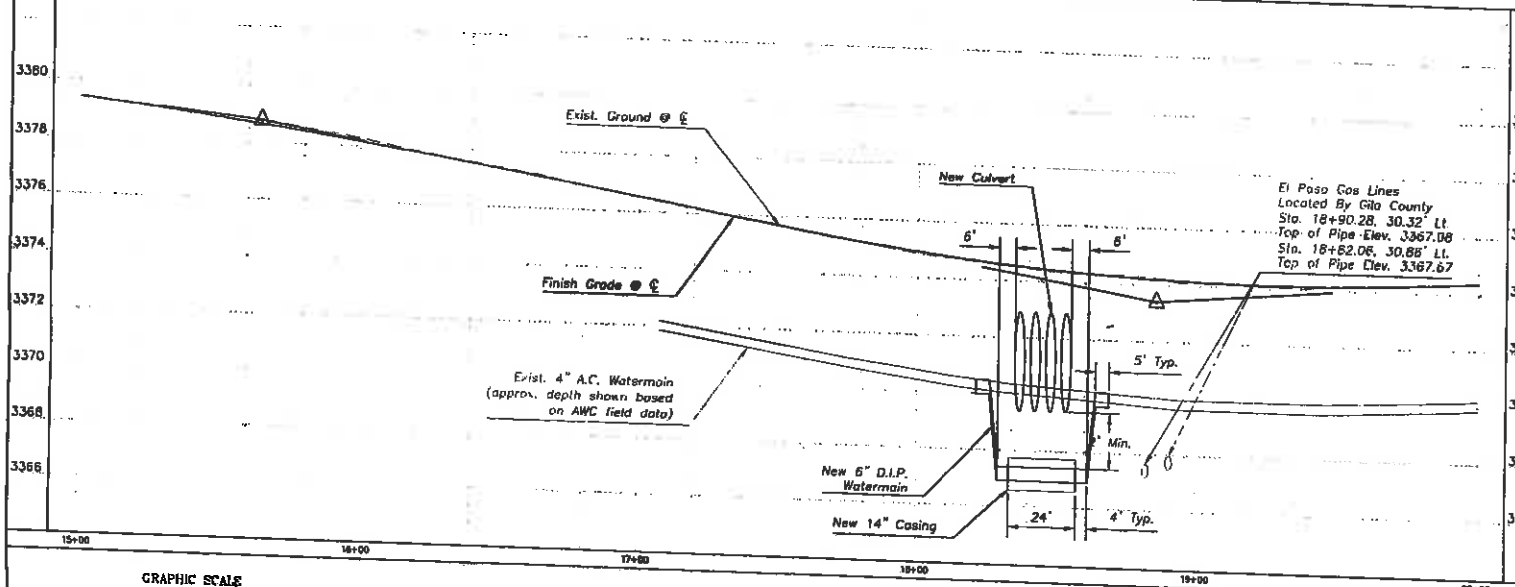

GRAPHIC SCALE

CONSTRUCTION NOTES

NO.	DESCRIPTION	EST. QTY. THIS SHEET
	WATERLINE	
50	INSTALL 6" D.I.P. WATERMAIN PER AWC STD. E-9-5-2	50 L.F.
52	INSTALL 6" 45° BEND PER AWC STD. E-9-5-2	4 EA.
54	INSTALL 4"x 6" COUPLING PER AWC STD. SPECS	2 EA.
59	INSTALL 14" CASING PER AWC STD. E-9-24-1	24 L.F.
	REMOVALS/ADJUSTMENTS	
150	WATERMAIN REMOVAL	48 L.F.

General Notes:

1. ALL WORK SHALL CONFORM TO THE ARIZONA WATER COMPANY SPECIFICATIONS, GENERAL CONDITIONS OF CONTRACT; E-4-1, CONSTRUCTION SPECIFICATIONS; E-9-1, AND STANDARD SPECIFICATIONS DRAWINGS; E-9-1, UNLESS OTHERWISE NOTED ON THE PLANS.
2. CONTRACTOR TO FIELD VERIFY ALL UTILITIES PRIOR TO CONSTRUCTION. THE CONTRACTOR SHALL CONTACT THE ENGINEER IF ANY UTILITY CONFLICTS ARISE FROM THE FIELD VERIFICATION. EXISTING UTILITIES DEPICTED IN THE CROSSING DETAIL SHOULD BE TAKEN AS APPROXIMATE. THE CONTRACTOR SHALL CONTACT "BLUE-STAKE," 1-800-782-5348, PRIOR TO COMMENCING CONSTRUCTION.
3. WHERE PLANS CALL FOR CONNECTING NEW WATER MAINS TO EXISTING WATER MAINS, IT SHALL BE THE CONTRACTOR'S RESPONSIBILITY TO VERIFY THE LOCATION, MATERIAL, AND SIZE OF THE EXISTING WATER MAINS AND TO FURNISH ALL MATERIALS TO MAKE THE PROPOSED CONNECTION.
4. CONTRACTOR SHALL EXERCISE EXTREME CAUTION WHEN EXCAVATING WITHIN THE EL PASO GAS EASEMENT OR RIGHT-OF-WAY. CONTRACTOR SHALL FOLLOW THE EL PASO GAS ENCROACHMENT STANDARDS WHEN WORKING WITHIN THE EL PASO GAS EASEMENT OR RIGHT-OF-WAY. AN AUTHORIZED EL PASO GAS REPRESENTATIVE MUST BE PRESENT ON THE SITE DURING ANY WORK PERFORMED ON OR ACROSS THE EASEMENT OR RIGHT-OF-WAY. EXCAVATION CLOSER THAN 2 FEET TO THE GAS PIPELINE SHALL BE DONE BY HAND UNTIL THE PIPELINE HAS BEEN EXPOSED.
5. THE CONTRACTOR SHALL VERIFY ALL BENCHMARK ELEVATIONS PRIOR TO UTILIZING THEM FOR CONSTRUCTION.
6. CONTRACTOR SHALL REPAIR OR REPLACE ANY EXISTING IRRIGATION LINES, VALVES, OR EQUIPMENT DISTURBED DURING CONSTRUCTION OF THE WATER MAIN. REPLACEMENT SHOULD BE EQUAL OR BETTER QUALITY THAN ORIGINAL EQUIPMENT AND IN ACCORDANCE WITH EITHER ARIZONA WATER COMPANY OR MAG SPECIFICATIONS.
7. PIPE MATERIAL REQUIREMENTS:
   DIP PIPE:
   6" DIP SHALL BE PRESSURE CLASS 350. ASSOCIATED FITTINGS SHALL BE RATED AT 350 PSI WORKING PRESSURE
8. ALL WATER LINES SHALL BE PRESSURE TESTED PER ARIZONA ADMINISTRATIVE CODE R18-5-508 C PRIOR TO BEING PUT INTO SERVICE.
9. ALL WATERLINES SHALL BE DISINFECTED PER ARIZONA DEPARTMENT OF ENVIRONMENTAL QUALITY BULLETIN 8 AND ARIZONA ADMINISTRATIVE CODE R18-5-508 C PRIOR TO BEING PUT INTO SERVICE.
10. WATER AND SEWER MAINS SHALL BE SEPARATED IN ORDER TO PROTECT PUBLIC WATER SYSTEMS FROM POSSIBLE CONTAMINATION AS PER ARIZONA ADMINISTRATIVE CODE R18-5-502 C.

PRELIMINARY
MARCH 2002
DRAFT
NOT FOR CONSTRUCTION

C.L. WILLIAMS CONSULTING, INC.
CIVIL ENGINEERING AND RESOURCE MANAGEMENT
621 South Hillside Lane
Pinetop, Arizona 85935
Phone: (928) 367-2348 Fax: (928) 367-2348

RUSSELL ROAD
ROADWAY IMPROVEMENT PLANS

WATERLINE
VERTICAL ADJUSTMENT

GILA COUNTY

ARIZONA WATER COMPANY

SPECIFICATIONS

GENERAL CONDITIONS OF CONTRACT: E-4-1

CONSTRUCTION SPECIFICATIONS: E-8-1

STANDARD SPECIFICATION DRAWINGS: E-9-1

2007 EDITION WITH 2010 REVISIONS

ARIZONA WATER COMPANY

GENERAL CONDITIONS OF CONTRACT: E-4-1

ARIZONA WATER COMPANY

E-4-1

GENERAL CONDITIONS OF CONTRACT

DEFINITIONS

A. Company. The words "Company" or "Arizona Water Company" mean Arizona Water Company, and where applicable, any division of Arizona Water Company, whose principal place of business is located at 3805 North Black Canyon Highway, Phoenix, Arizona 85015-5351 (Post Office Box 29006, Phoenix, Arizona 85038-9006).

B. Company's Authorized Representative. The words "Company's Authorized Representative" mean any officer of the Company, and any of the Company's Engineers, any Division Manager or Superintendent of the Company and/or such other person(s) designated in writing as the "Company's Authorized Representative" by the President or any Vice President of the Company.

C. Contractor. The word "Contractor" means either an individual or other entity employed to do the work as shown on the Construction Drawings and as specified herein.

D. Construction Drawings. The words "Construction Drawings" mean plans prepared by or on behalf of Arizona Water Company.

E. Invitation to Bid. The term "Invitation to Bid" means the current copy of Arizona Water Company's Form E-3-11-4 Request for Proposal/Contract or Form E-3-12-2 Invitation to Bid.

F. Contract. The word "Contract" means the written document titled "Contract" or "Proposal/Contract" when such document has been signed by an officer or other authorized representative of both the Contractor and the Company.

G. Inspector. The word "Inspector" means the Company's Authorized Representative or a person designated in writing by the Company's Authorized Representative.

GENERAL CONDITIONS OF CONTRACT

1. **GENERAL**

These General Conditions of Contract govern all works of installation and construction unless deviations are provided for on the Construction Drawings or in the Contract.

2. **BONDS**

The Contractor shall, upon request by the Company, furnish a performance bond and a material payment bond in the amount of 100% of the Contract price, in a form and from a surety acceptable to the Company.

3. **LABOR AND/OR MATERIAL RELEASES**

The Contractor shall supply labor and/or material releases satisfactory to the Company when requested to do so. Forms will be provided by the Company.

4. **LICENSE**

The Contractor shall have, as may be required by law, a valid license applicable to the work to be performed.

5. **INSURANCE**

The Contractor shall maintain in full force and effect insurance at no less than the following minimum amounts:

WORKER'S COMPENSATION	In accordance with requirements of the laws of the State of Arizona.
COMPREHENSIVE GENERAL LIABILITY (Including contractual liability covering death, bodily injury and property damage)	Combined single limit of not less than $1,000,000 for each occurrence.
AUTOMOTIVE LIABILITY (Including owned, non-owned and hired vehicles)	Combined single limit of not less than $1,000,000 for each occurrence.
SUBCONTRACTOR'S PUBLIC LIABILITY AND PROPERTY DAMAGE INSURANCE AND VEHICLE LIABILITY INSURANCE	Contractor shall either require each of its subcontractors to procure and to maintain Subcontractor's Public Liability and Property Damage Insurance and Vehicle Liability Insurance of the type and in the amounts specified in this Section 5 or insure the activities of its subcontractors in Contractor's own policy, in like amounts.

Such insurance shall name the Company, its officers, agents, and employees as additional insured and be primary for all purposes.

The Company will at all times have the right to require that all of such insurance be placed with insurance companies that are satisfactory to it. The Contractor shall file with the Company a certificate evidencing that each policy of insurance for the above coverages in the minimum amounts specified has been purchased and is in good standing.

Such certificate shall provide that notice be given to the Company at least thirty (30) days prior to cancellation or material change in the form of such policies or any of them. Such certificates shall be kept on file by the Company and the Company must have current certificates on file, or a certificate must accompany any bid proposal, before that proposal will be accepted by the Company.

6. CONTRACTOR UNDERSTANDS WORK AND WORKING CONDITIONS

By executing a Contract with the Company, the Contractor warrants that it has, by careful examination, satisfied itself as to the nature and location of the work, including soil conditions, the character, quality and quantity of the materials to be encountered, the character of the equipment and facilities needed preliminary to and during prosecution of the work, the general and local conditions, and all other matters which can in any way be expected to affect its work under the Contract. Verbal agreements or conversations with any officer, agent or employee of the Company, either before or after the execution of the Contract, are not binding upon the Company and shall not affect or modify any of the terms or obligations herein contained.

7. SPECIFICATIONS AND DRAWINGS

The Contractor shall keep on the job a complete copy of all drawings and specifications furnished by the Company which are applicable to the Contract with the Company. Anything mentioned in the specifications and not shown on the drawings or shown on the drawings and not mentioned in the specifications shall be of like effect as if shown or mentioned in both. In case of a discrepancy between the figures, drawings or specifications and physical conditions of the job, the matter shall be immediately submitted to the Company's Authorized Representative for decision as to adjustments, if any, because of the discrepancy; without a decision from the Company's Authorized Representative no discrepancy shall be adjusted by the Contractor, save only at its own risk and expense. Any deviation from the specifications must be approved in writing by the Company's Authorized Representative.

8. PROPERTY PROTECTION

Trees, fences, poles, underground structures and all other property shall be protected unless their removal is authorized on the Construction Drawings. Any property damaged shall be restored by the Contractor, at its expense, to the owner's satisfaction.

9. SPECIAL PERMITS, LICENSES AND INSURANCE

The Company shall obtain all permits for railroad, county, state, city and irrigation district rights-of-way as well as Forest Service, State Land Department and Bureau of Land Management permits. (Pipeline Contractors)

Whenever blasting is required, the Contractor shall obtain all permits, licenses and insurance required at its expense. (All Contractors)

The Contractor will be required to obtain, and shall certify in writing to the Company that it has obtained, all additional permits required to perform the work including, but not limited to, a National Pollution Discharge Elimination System Permit and/or an Aquifer Protection Permit as those permits relate to disposal of drilling, development and test waters and/or any other discharge or similar activity. (Well Drilling Contractors)

10. SURVEYS

The Company shall be responsible, or arrange, for all surveys required for the work covered in the Contract, unless otherwise specified.

11. BENCH MARKS, PROPERTY STAKES AND SURVEY STAKES

Bench marks, property stakes and survey stakes shall be preserved by the Contractor; in case they are destroyed or removed by Contractor or its employees, the Company will replace them at the Contractor's expense, and the Contractor and its sureties shall be liable therefore.

12. TOOLS, EQUIPMENT AND MATERIALS

The Contractor shall furnish all of the necessary tools, equipment, and pipeline materials required for the work. All material furnished by the Contractor shall be of the quality specified by the Company in its Construction Specifications (E-8-1).

13. SUPERINTENDENCE BY CONTRACTOR

The Contractor shall assure adequate superintendence of the work by a competent foreman or superintendent (with full authority to act on behalf of Contractor) satisfactory to the Company, who will be on the job at all times when work is in progress.

14. ORDER AND DISCIPLINE

The Contractor shall at all times enforce strict discipline and good order among its employees.

15. INDEPENDENT CONTRACTOR

The Contractor is an independent contractor and any provisions in the Contract, the specifications, or these General Conditions of Contract and Arizona Water Company's Construction Specifications which may appear to give the Company the right to direct the Contractor as to the details of the doing of any work to be performed by the Contractor, or to exercise a measure of control over said work, shall be deemed to mean and shall

mean, that the Contractor shall follow the desires of the Company in the results of the work only and not in the means whereby said work is to be accomplished, and the Contractor shall use its own discretion and shall have complete and authoritative control over the work and as to the details of the doing of the work.

16. PUBLIC SAFETY AND CONVENIENCE

Contractor shall at all times conduct its work so as to ensure the least possible obstruction to traffic and other inconvenience to the general public and the residents and businesses in the vicinity of the work, and to ensure the protection of persons and property.

To protect persons from injury and to avoid property damage, Contractor shall provide and maintain adequate barricades as required during the progress of the work and until it is safe to use the property for its intended purpose. The rules and regulations of the local governmental agencies and specific permit requirements respecting safety provisions shall be observed at all times.

In the case of blasting, the Contractor shall exercise extreme caution to protect the general public and personal and public property from harm or damage.

17. PROPERTY PROTECTION

Trees, fences, poles, and all other property shall be protected unless their removal is authorized by the Company. Any property damaged shall be restored by Contractor, at his expense, to Company's satisfaction.

18. RESPONSIBILITY OF CONTRACTOR

The work shall be under Contractor's responsible care and charge. Contractor shall bear all loss and damage whatsoever and from whatsoever cause, except that caused solely by the act of Company, which may occur on or to the work during the fulfillment of the Contract. If any loss or damage occurs, Contractor shall immediately make good any such loss or damage, and in the event of Contractor refusing or neglecting to do so, Company may, or by the employment of some other person, make good any such loss or damage, and the cost and expense of so doing shall be charged to Contractor.

The mention of any specific responsibility or liability imposed upon Contractor shall not be construed as a limitation or restriction of any general liability or duty imposed upon Contractor by the Contract. The reference to any specific duty or liability being made herein is merely for the purpose of explanation.

Contractor alone shall at all times be responsible for the safety of Contractor, Contractor's employees, and its subcontractors' employees, and for Contractor and its subcontractors' plant and equipment and the method of performing the work.

19. ERRORS AND OMISSIONS

If Contractor, in the course of the work, becomes aware of any errors or omissions in the Contract Documents or in the instructions, or if Contractor becomes aware of any discrepancy between the Contract Documents and the physical conditions of the site of

the work, Contractor shall immediately inform Company in writing. Any work done by Contractor after such discovery, until authorized by Company, will be done at Contractor's risk.

20. LAWS, REGULATIONS

Contractor shall give all notices required by law and comply with all laws, ordinances, rules and regulations, including, but not limited to, all applicable federal, state, local and other legally required health and safety standards, orders, rules, regulations or other laws, pertaining to the conduct of the work. Contractor shall be liable for, and shall defend and indemnify Company against and hold it harmless from, all violations of any law, ordinance, rule, regulation, standard, or order in connection with work furnished by or on behalf of Contractor. If Contractor observes that the Contract Documents are at variance with any law, ordinance, rule, regulation, standard, or order it shall promptly notify Company in writing and any necessary changes shall be adjusted as provided in the Contract for changes in the work. Contractor shall not perform any work contrary to such laws ordinances, rules, regulations, standards, or orders.

21. PERMITS, FEES AND INSPECTIONS

Permits and licenses necessary for the prosecution of the work, including, but not limited to, any National Pollution Discharge Elimination Systems (NPDES) Permits required by U.S. Environmental Protection Agency or the Arizona Department of Environmental Quality shall be secured, paid for, and complied with by Contractor.

Contractor shall be responsible for its actions and shall abide by all conditions and/or restrictions set forth in the NPDES Permit and any other permit or license required for this project.

Company shall at all times have access to the work whenever it is in preparation or in progress and Contractor shall provide proper facilities for such access and for all inspections. If the Contract Documents, the General Superintendent's instructions, laws, ordinances or any public authority require any work to be inspected or approved, Contractor shall give timely notice of its readiness for inspection.

Inspection of the work shall not relieve Contractor of any of its obligations even if defective work or unsuitable materials may have been previously overlooked by Company and accepted or estimated for payment. If any work is found not in accordance with the Contract Documents, Contractor, at its sole cost and expense, shall promptly make good such defective work.

22. CONSTRUCTION MARKING (PIPELINE ONLY)

Each job shall be marked and/or barricaded by the Contractor in such a manner that the construction is clearly visible at all times.

23. EXTRA WORK AND/OR MATERIALS

Except as otherwise herein provided, no charge for any extra work and/or material will be allowed unless the same has been ordered in writing by the Company's Authorized Representative, and the price stated in such order.

24. CHANGES

The Company shall have the right to make any changes in the work that it may determine to be necessary. If such changes affect the cost of the work, an equitable adjustment shall be negotiated. Changes shall in no way affect or void the obligations of both parties under the original Contract.

25. INSPECTION

All work and material shall be open at all times to inspection and acceptance or rejection by the Company's Inspector. Any work covered up by the Contractor prior to inspection and acceptance by the Company shall be subject to being uncovered at the expense of the Contractor for inspection by the Company. The Contractor shall give the Company reasonable notice of starting new work and shall provide, without extra charge, reasonable and necessary facilities for inspection, even to the extent of taking out portions of finished work. In case any such finished work removed is found satisfactory, however, the actual direct cost of such removal and replacement, plus 15% of such cost, will be paid by the Company; in addition, if completion of the work has been delayed thereby, the Contractor shall be granted a suitable extension of time on account of the additional work involved.

26. DEFECTIVE WORK OR MATERIAL

The Contractor shall remove, at its own expense, any work or material found defective by the Company's Inspector and shall rebuild and replace the same without extra charge; in default thereof, the same may be done by the Company at the Contractor's expense.

27. ASSIGNMENT

Neither party to the Contract may assign the Contract or sublet it in whole or in part without the written consent of the other, nor shall the Contractor assign any monies due or which may become due hereunder without the previous written consent of the Company, nor shall such consent release the Contractor from any of its obligations and liabilities under the Contract.

28. RIGHTS OF VARIOUS INTERESTS

Whenever work that is being done for the Company other than by the Contractor is contiguous to work being done by the Contractor, the respective rights of the various interests involved shall be established by the Company to secure the completion of the various portions of the work in general harmony.

29. SUSPENSION OF WORK

The Company's Authorized Representative may at any time and for any reason suspend all or any portion of the work under the Contract. This right to suspend work shall not be construed as denying the Contractor compensation for actual, reasonable and necessary expenses due to suspension to which it may be entitled.

The Company's Authorized Representative may order the Contractor to suspend any work because of certain conditions, such as inclement weather, or because the

Contractor is in violation of these General Conditions of Contract or the Construction Specifications. It is understood that compensation for expenses will not be allowed for such suspension when ordered by the Company's Authorized Representative on account of such conditions.

30. PROCEDURE OF WORK (PIPELINE ONLY)

All work under the Contract shall be planned and performed so as to cause a minimum of interference with normal vehicular and pedestrian traffic. At no time shall the Contractor completely obstruct the traffic to any business establishment during normal work hours of that business. It shall be the Contractor's responsibility to maintain facilities for ingress and egress to any business establishment. When crossing any street, not more than one-half of the street may be blocked at one time. All federal, state, county and city laws, rules and regulations relating to this subject are to be obeyed.

The Contractor shall complete any portion or portions of the work in such order of time as the Company may require. The Company shall have the right to take possession of and use any completed or partially completed portions of the work. If such prior possession or use increases the cost of or delays the work, the Contractor will be entitled to extra compensation or extension of time or both, as the Company may determine.

31. DISPUTES

All questions or controversies which arise between the Contractor and the Company, under, or in reference to, the Contract, shall be decided by the Company's Authorized Representative and a representative of the Contractor, and their decision shall be final and conclusive upon both parties.

32. CONNECTION TO EXISTING SYSTEM (PIPELINE ONLY)

Unless approved in writing by the Company's Authorized Representative, no tie-in or hot tap on the existing system shall be made unless the Company's Inspector is present. When the tie-in requires the operation of an existing valve or other control equipment, the conditions of Paragraph(s) 30 and 33 shall be complied with. The Contractor shall notify the Company twenty-four (24) hours prior to tie-in as to the exact time the Contractor plans to make tie-in so that the Company's Inspector will have sufficient time to locate valves and make necessary preliminary arrangements for shut down.

33. PLANNED INTERRUPTION OF WATER SERVICE (PIPELINE ONLY)

No valve or other control on an existing Company water system shall be operated for any purpose by the Contractor without approval of the Company's Inspector. All of the Company's water customers whose service is interrupted by a planned interruption, other than in cases of emergency, shall be notified by the Contractor at least twenty-four (24) hours before the planned interruption and advised of the probable time when the service will be restored.

34. EXISTING UTILITY FACILITIES (PIPELINE ONLY)

The Contractor shall notify all known utilities in the area of the work to be performed under the Contract and shall make arrangements to have their facilities marked in

accordance with A.R.S. 40-360.022 ("Blue Stake Law"). The Contractor shall be responsible for locating and preserving all marked facilities. Any damages to these marked facilities shall be repaired at the expense of the Contractor.

The Company will pay the cost to relocate its or other structures when such structures are found occupying the physical space of the proposed installation. It is understood that the Contractor will be reimbursed for such work only when written authorization from the Company has been obtained in advance of such work.

35. CLEANING UP

The Contractor shall remove from the Company's property and from all public and private property, at its own expense, all temporary structures, rubbish and waste materials resulting from its operations. In the event Contractor fails to do so, the Company may remove same at the expense of the Contractor.

36. WORKING HOURS (PIPELINE ONLY)

Unless stated to the contrary in the Invitation to Bid and/or so stated on the Construction Drawings, or agreed to by the Company during a Pre-Construction Conference, the Contractor shall not be permitted to perform work on Saturdays, Sundays, or Company holidays, or commence work such as tie-ins that cannot be completed during normal working hours.

37. INDEMNITY

A. The Contractor shall indemnify the Company against, and save and hold it harmless from, any and all liability, claims, demands, loss, actions, causes of action, expense, penalties, fines, assessments, damages and costs of every kind and nature for injury to or death of any and all persons, including, without limitation, employees or representatives of the Company or of the Contractor or of any subcontractor, or any other person or persons, and for damage, destruction or loss, consequential or otherwise, to or of any and all property, real or personal, including, without limitation, property of the Company or of the Contractor or of any subcontractor, or of any other person or persons, and the violation of any law, ordinance, rule, regulation, standard, or order resulting from or in any manner arising out of or in connection with the performance of the work under the Contract, howsoever same may be caused, including, without limitation, the Company's active or passive negligence. The Contractor shall also, upon request by the Company, and at no expense to the Company, defend the Company in any and all suits, concerning such injury to or death of any and all persons, and concerning such damage, destruction or loss, consequential or otherwise, to or of any and all property, real or personal, including, without limitation, suits by employees or representatives of the Company or of the Contractor or of any subcontractor, or any other person or persons, or concerning any court or administrative proceeding concerning the violation of any law, ordinance, rule, regulation, standard, or order. Excluded from this paragraph are only those injuries to or deaths of persons and damage, destruction or loss, to or of property arising from the sole negligence or willful misconduct of the Company.

B. Contractor shall indemnify the Company against, and save and hold it harmless from, any and all liability, claims, demands, damages, costs, expenses and attorney's fees, suffered or incurred on account of any breach of any obligation, covenant or other

provision of this contract, including without limitation, breach of the indemnity provisions of subsection A of this Section 37.

C. Contractor further agrees to defend, indemnify and hold harmless the Company, its directors, officers, employees, and agents, from and against any and all costs, damages, claims, expenses, violations, notices of violations, penalties, liens, assessments, and liabilities of every kind and nature, foreseeable or unforeseeable, directly or indirectly, arising from any release, removal, generation, use, storage or disposal on, under, around, or from the well site of any material, substance, or waste, hazardous or non-hazardous, including, without limitation, drilling fluids, mud, cuttings and development and test water howsoever same may be caused, including, without limitation, the Company's active or passive negligence.

38. LIENS

If at any time there shall be evidence of any lien or claim for which the Company might become liable and which is chargeable to the Contractor, the Company shall have the right to retain out of any payment then due or thereafter to become due, an amount sufficient to completely indemnify the Company against such lien or claim. If the Company determines that such lien or claim is valid, the Company may pay and discharge the same, and deduct the amount so paid from any monies which may be or become due and payable to the Contractor.

39. PAYMENT

Upon completion of the installation or construction, the Company will, within thirty (30) days after receipt of proper invoice and labor and material releases, pay the amount due the Contractor. If the Company believes that additional work, such as clean up, is required, it may deduct the total cost of such additional work from the amount to be paid to Contractor.

40. COMPANY'S RIGHT TO TERMINATE CONTRACT: DAMAGES DUE TO DELAY

If the Company finds the Contractor to be in material violation of any section of these General Conditions of Contract, Construction Specifications or Standard Specification Drawings or if the Contractor refuses or fails to prosecute the work, or any separable part thereof, with such diligence as will insure its completion within the time specified or any extension thereof, or fails to complete said work within such time, or when any other cause exists to justify such action, the Company may, without prejudice to any other right or remedy, by written notice to the Contractor, terminate its right to proceed with the work or such part of the work as to which there has been such violation, delay or other cause.

In the event the Contractor's right to proceed is terminated, the Company may take over the work and take possession of, and utilize in completing the work, such materials as may be on the site of the work and necessary therefore and prosecute said work to completion by whatever method it may deem expedient. The Contractor and its sureties shall be liable to the Company for any excess cost caused thereby.

In the event the Contractor's right to proceed with the work is terminated, the Contractor shall not be entitled to receive any further payment until the work is completed or the job is canceled. If the unpaid balance of the Contract price exceeds the expense of finishing

the work, including compensation for additional managerial and administrative services, such excess shall be paid to the Contractor. If such expenses exceed such unpaid balance, the Contractor shall pay the difference to the Company.

41. GUARANTEE

The Contractor shall guarantee all labor and workmanship and any materials it installs for a period of one year following the date of completion and acceptance by the Company. If any portion of the work or any of the materials become defective within the guarantee period, the Company will notify the Contractor of such defect. The Contractor must repair any defect within fifteen (15) days of such notification. If repairs are not completed within this time period, the Company may repair the defect, or cause such defect to be repaired, and the cost of such repairs shall be paid by the Contractor. The Company reserves the right to determine which defects are the result of poor labor and workmanship and which are caused by defective materials.

42. LIQUIDATED DAMAGES FOR NON PERFORMANCE; REQUEST FOR EXTENSION(S) OF TIME

Time is of the essence in the Contract. The time period required for completion of the work will be specified in the Contract. The Contractor agrees that the Company will suffer substantial damages in the event the Contractor fails to complete the work within the agreed upon time period. The Contractor and the Company agree that since it would be impracticable or extremely difficult to precisely fix such damages, a reasonable approximation of such actual damages suffered by the Company shall be a sum equal to 0.5% of the Contract price for each working day beyond the time period for completion of the work specified in the Contract.

Request by the Contractor for extensions of the time period shall be in writing and shall not become effective until approved in writing by the Company's Authorized Representative.

43. PAYMENT FOR REQUIRED TESTING

Whenever testing is required by any governmental agency or by the Company to assure conformance of the Contractor's work with the appropriate standard, it will be paid for as follows:

a. For testing required under permits obtained by the Company or testing specifically requested by the Company, the cost of the first test will be paid for by the Company. In the event of failure of the first test, the cost of all further testing associated with the failure will be paid by the Contractor.

b. For testing required under permits obtained by the Contractor, all costs will be paid by the Contractor. Testing of the pipeline for pressure and leakage will be included in the Contract price.

44. CONTRACT DEADLINES AND BONDS REQUIREMENTS

The time limits to be allowed for the completion of any work covered in the Contract shall be established as follows: In the proposal submitted to the Company, in response to the Invitation to Bid, the Contractor shall state the number of calendar days required for completion of the work. The time required will become a part of the Contract. When the Company is ready to proceed with the work, a Commencement Notice will be issued by the Company to the Contractor by mail. The Commencement Notice will allow the time required in the Contract plus ten (10) calendar days and will indicate the final day of the time allowed. The work cannot begin until the Company has received a performance bond and materials payment bond for the Contract price unless the bonds have been waived under the special conditions section of the Contract. The additional ten (10) days is the allowance for time to deliver the Commencement Notice to the Contractor and for the Contractor to return the performance bond and materials payment bond to the Company. Time extensions will be granted if warranted, and only at the time of the delay, thus extending the final day of the time allowed.

If the Company elects not to require a performance bond and a material payment bond for the work, the cost of the bonds will be deducted from the proposed total cost and the Contract will reflect this reduced cost and the bonds requirements will be waived under special conditions of the Contract.

ARIZONA WATER COMPANY

CONSTRUCTION SPECIFICATIONS: E-8-1

ERRATA 2010

ARIZONA WATER COMPANY

E-8-1

CONSTRUCTION SPECIFICATIONS FOR THE INSTALLATION OF WATER DISTRIBUTION SYSTEMS DUCTILE IRON

DEFINITIONS

A. Company. The words "Company" or "Arizona Water Company" mean Arizona Water Company, and where applicable, any division of Arizona Water Company, whose principal place of business is located at 3805 North Black Canyon Highway, Phoenix, Arizona 85015-5351 (Post Office Box 29006, Phoenix, Arizona 85038-9006).

B. Company's Authorized Representative. The words "Company's Authorized Representative" mean any officer of the Company, and any of the Company's Engineers, any Division Manager or Superintendent of the Company and/or such other person(s) designated in writing as the "Company's Authorized Representative" by the President or any Vice President of the Company.

C. Contractor. The word "Contractor" means either an individual or other entity employed to do the work as shown on the Construction Drawings and as specified herein.

D. Construction Drawings. The words "Construction Drawings" mean plans prepared by or on behalf of Arizona Water Company.

E. Contract. The word "Contract" means the written document titled "Proposal/Contract" when such document has been signed by an officer or other authorized representative of both the Contractor and the Company.

CONSTRUCTION SPECIFICATIONS
FOR THE INSTALLATION OF WATER DISTRIBUTION SYSTEMS
DUCTILE IRON

1. GENERAL

All work is to be completed in a safe, workmanlike manner and in accordance with these Construction Specifications; any deviation therefrom must be approved in writing by the Company.

Installations must conform with the requirements of all governmental regulating agencies and the cost of conforming to such regulations must be included in the unit bid prices. Examples of such regulations, without attempting to be inclusive, are:

a. Special compaction and paving for street crossing.
b. Shoring when required because of the trench depth.
c. Closing a trench in those areas where no open trench is allowed overnight.
d. Barricading and traffic control as required.

2. LOCATION MARKING

Alignment stakes as required in the opinion of the Company shall be furnished by the Company to the Contractor and shall be set by the Company at agreed upon intervals and offsets. Under normal circumstances these will reference the pipeline location five feet (5') into the right-of-way measured from property pins. Grade stakes will be provided only when the Construction Drawings show a pipeline depth other than covered in these Specifications. It is the responsibility of the Contractor to preserve all survey work.

3. TRENCH EXCAVATION

The trench location is to be determined by the Construction Drawings.

FOR 8-INCH OR SMALLER PIPE: The depth of the trench prior to pipe laying shall be such that the finished pipeline shall have between thirty-six inches (36") and forty-two inches (42") of cover unless otherwise specified on the Construction Drawings.

FOR 12-INCH AND LARGER PIPE: The depth of the trench prior to pipe laying shall be such that the finished pipeline shall have between forty-eight inches (48") and sixty inches (60") of cover unless otherwise specified on the Construction Drawings.

The width of the trench at and below the level at the top of the pipe shall be a minimum of twelve inches (12") plus the outside diameter of the pipe barrel and a maximum of twenty-four inches (24") plus the outside diameter of the pipe barrel.

The bottom of the trench shall be accurately graded to provide a uniform bearing for each length of pipe for the full length of the pipe. If the native material on the trench bottom can be reasonably dug by hand, bell holes shall be dug for the joints so that the joints in no way support the pipe. When native materials such as rock are encountered during trenching that will not provide a uniform support for the pipe, the trench will be over-excavated an additional six inches (6") and suitable bedding material will be placed in the trench.

Bedding material will be placed by hand in four-inch (4") lifts and compacted to ensure uniform compaction and to eliminate any voids under the pipe. When the space between the pipe and trench bottom varies, this must be backfilled and compacted in four-inch (4") lifts to the mid-section of the pipe.

Whenever the trench is over-excavated for whatever reason, the trench bottom will be brought up to the correct depth at the Contractor's expense using either method (a) or (b) as follows:

a. A.B.C. material shall be used and compacted to a uniform density of not less than 80% of the maximum density as determined by AASHTO T-99 method A and T-191.

b. Native material 100% of which will pass through a one and one-half inch (1½") screen and at least 20% of which will pass through a number-8 screen shall be used and compacted to a uniform density of not less than 85% of the maximum density as determined by AASHTO T-99 method A and T-191.

4. MATERIALS TO BE PROVIDED BY CONTRACTOR

Unless otherwise specified on the Construction Drawings or in the Contract, the Contractor will supply all of the necessary materials which will become a permanent and integral part of the water distribution system, including concrete blocking, anchors, backfill material, paving material and supplies used during the prosecution of the work. All materials provided by the Contractor to construct the water distribution system must be NSF Standard 61 approved. All potable water pipes and fittings shall have NSF-PW seal. Construction materials used in the water system shall be lead free as defined at AAC R28-4-504 and R18-1-101. The Contractor will provide the following m aterials:

a. FIRE HYDRANTS: Mueller Super Centurion 250 Fire Hydrant, meets ANSI/AWWA C502 Standard, Model No. A-423, 5¼" main valve opening, three way, 6" Mechanical Joint Shoe, 1½" pentagon operating nut, color - yellow, drain open, open direction - left, 4' or 4'6" bury depending on application. For pumper and hose nozzle inform ation see below.

(1) 1 - 4" Pumper Nozzle, NST and 2 – 2½" Hose Nozzles, NST. (These locations only: Ajo, Casa Grande, Coolidge and San M anuel.)

(2) 1 – 4½" Pumper Nozzle, NST and 2 – 2½ " Hose Nozzles, NST. (These locations only: Apache Junction, Arizona City, Lakeside, Oracle, Overgaard, Pinewood, Rimrock, Sedona, Sierra Vista, White Tank and Winkelman.)

(3) 1 – 4½" Pumper Nozzle, NST and 2 – 2½" Hose Nozzles, NPT (Bisbee only.)

(4) 1 - 3" Pumper Nozzle GA 6-350 (6 threads per inch, 3.50 pitch diameter) and 2 – 2½" Hose Nozzles, NPT (Miami only.)

(5) 1 – 3½" Pumper Nozzle GA 6-411 (6 threads per inch, 4.11 pitch diameter) and 2 – 2½" Hose Nozzle, NST (Superior only.)

b. FITTINGS: Manufactured by Tyler or Union. Crosses, Elbows, Tees, Cap, Reducer, Adapter, Plug, Blind Flange and Tapped Flange; Ductile Iron, Class 350, SSB, Cast Iron Cement Lined.

(1) Foster Adaptors for MJ, made by Infact Corporation: Available in size 4" to 16". Part No. 4" = 4FA-BC, 6" = 6FA-BC, 8" = 8FA-BC, 10" = 10FA-BC, 12" = 12FA-BC, 16" = 16FA-BC.

c. DETECTOR CHECK VALVE: Mueller/ Hersey EDC III, iron body, including 5/8" x ¾" Trim Kit. Trim Kit Part No.: 4" = 282080, 6" = 282082, 8" = 282085, 10" = 282496.

d. GATE VALVES: Mueller Resilient Wedge Gate Valves, meets AWWA C509 specification, 250 psig, Non-rising stem, Part No. A-2360 sizes 4" through 12" ; Part No. A-2361 sizes 14" through 36", low zinc stems, epoxy coated inside and outside to meet the NSF 61 rating. The bonnet and stuffing box shall have 304 stainless steel bolts/nuts.

e. TRACER WIRE and WARNING TAPE:

1. TRACER WIRE: Shall be direct bury AWG #14 solid copper wire, Color: Blue.

2. WARNING TAPE: Reef Industries, Standard Terra Tape in 3" widths. Color: Blue and imprinted 'Arizona Water Company'.

f. AIR RELEASE VALVE: Crispin Model AR10 with 1" NPT inlet and ½" NPT outlet, cast iron body and top flange; with a 5/64" orifice with stainless steel valve sealing faces and BUNA-N rubber.

g. PRESSURE RELIEF VALVE: Watts 174A, Model M, 2" inlet, 2" outlet, Bronze Body, 30lb. to 150lb. pressure range.

h. MEGA LUG: Mechanical Joint restraint made of ductile iron conforming to ASTM 536-80, 250 psi made by EBAA Iron, Inc., series 1100 or equal.

i. METER BOXES:

(1) Concrete Box with a steel regular lid, Number 1: Tucson specification.

(2) Concrete Box with a steel regular lid, Number 2, 3, and 4: Phoenix specification.

j. PIPE, COPPER: Type K soft copper in 60 or 100-foot coils, per ASTM B88.

k. PIPE, DUCTILE IRON: Ductile Iron Pipe, Cement Lined, Push-on, conform to current ANSI/AWWA Specification A21.51/C151, Pressure Class 350 (sizes 4" through 12"), Pressure Class 250 (sizes 14" through 20"), or Pressure Class 200 for 24" through 36" pipe. Vendors:

(1) Pacific States Cast Iron Pipe Company
(2) Griffin Pipe
(3) United States Pipe and Foundry Company
(4) American Ductile Iron Pipe
(5) Clow Pipe (McWane, Inc.)

l. PIPE, PLASTIC: Plastic pipe, C-900 PVC per ANSI/AWWA C900, Class 150, sizes 6" through 12". NSF61 approved. Furnished in laying lengths of 20'. The barrel shall conform to the outside dimensions of steel pipe (IPS) or cast iron (CI) pipe equivalent and the wall thickness of dimension-ratio (DR) 18.

m. POLYETHYLENE ENCASEMENT (Polywrap): For all pipeline and related fittings installed, EXCEPT for the Coolidge Division. Minimum 8 Mil. and installed per AWWA C105/A21.5-93 and ASTM A-674-89. Manufactured by the Pacific States Cast Iron Pipe Company. The wrapping tape shall be minimum 10 mil. vinyl tape. No duct tape shall be used.

n. COUPLING: Mueller, straight three part union, tested to meet ANSI/AWWA C800, H15403, conductive com pression.

Mueller, H15428, straight coupling, conductive compression by male iron pipe, tested to meet ANSI/AWWA C800 specification. Size: 2".

Mueller, H15451, straight coupling, conductive compression by female iron pipe, tested to meet ANSI/AWWA C800 specification. Size: 2".

Viking Johnson brand, sold by Mueller: MaxiFit Straight (2"-24"), MaxiFitXtra Straight (4"-8") or MaxiStep Transition, tested to meet AWWA/ANSI C.219-91 specifications – certified to ISO 9001:1994 / Smith – Blair Quantum.

o. STOP, ANGLE METER, BALL: Mueller, valve, B24258, conductive compression by meter swivel nut, tested to meet ANSI/AWWA C800, size 5/8 " x ¾" x ¾" for a ¾" service or size 1" for a 1" service.

Mueller, valve, B24265, female pipe thread by meter swivel nut, tested to meet ANSI/AWWA C800, size 5/8" x ¾" x ¾" for a ¾" service or size 1" for a 1" service.

p. STOP, CORP: Mueller, ball valve, B25008, taper thread by conductive compression, tested to meet ANSI/AWWA C800 specification, sizes: ¾", 1" and 2".

Mueller, ball valve, B25028, iron pipe thread by conductive compression, tested to meet ANSI/AWWA C800 specification. Sizes ¾", 1", and 2".

Mueller, 300 Ball Curb Valve, B-25122, taper thread by conductive compression, tested to meet ANSI/AWWA C800 specifications, size: 2". (2" service)

q. STOP, CURB: Oriseal valve, H10291, iron pipe thread by iron pipe thread, quarter turn check, brass, tested to 300 psi working pressure, tested to meet ANSI/AWWA C800 specification, size: 2".

Mueller, B20283, Mueller 300 ball curb valve, female iron pipe by female iron pipe, quarter turn check, tested to meet ANSI/AWWA C800 specification. Size: 2". (Blow-off E-9-8-1).

r. TAPPING SADDLE: Smith Blair, Cast Bronze ASTM-B584 85-5-5-5, double strap, iron pipe threads, Models 321 and 323. Washers are silicon bronze, ASTM-B36. Gaskets are grade 60 Buna N, or Mueller bronze double strap service saddle, BR 2 B series, cast bronze, ASTM-B585, 85-5-5-5, or H16084, 200 psig, meets ANSI/AWWA C800.

s. TAPPING SLEEVE: Mueller H304 Stainless Steel Tapping Sleeve, JCM 432 18-8 Type 304 Stainless Steel Tapping Sleeve, Romac "SST" Type 304 Stainless Steel Tapping Sleeve or CASCADE-style CST-EX stainless steel pressure-rated tapping sleeve.

t. TAPPING VALVE: Mueller Resilient Wedge tapping valve, Catalog Number T-2360-16, Class 125, sizes 4" through 12"; T-2361-16, Class 125, sizes 14" to 36" all with Type 304 stainless steel fasteners; bypass valves are required on 18" – 36" valves flange by mechanical joint per ANSI/AWWA C111, iron wedge, non-rising stem. Epoxy coated interior/exterior per ANSI/AWWA C550 for NSF 61 compliance. 250 PSI range for valves 4" to 12". 150 PSI range for valves 14" to 36".

u. U-BRANCH: Mueller, H15364, 1" male iron pipe by ¾" male iron pipe, tested to meet ANSI/AWWA C800 specification. Size: 1" x ¾" x 13½", straight line.

v. VALVE BOXES: Valve Box with Cover, adjustable, Tyler 562-A or equal, made of cast iron.

w. VAULTS: Utility Vault Company, Chandler, AZ.

(1) 4484-WA concrete vault with a 3660 aluminum double torsion door with a recessed padlock hasp, two - 18" x 24" center knockouts.

(2) 575-WA concrete vault with a 4874 aluminum double torsion door with a recessed padlock hasp, two - 18" x 24" center knock outs and adjustable frame.

(3) 612-5X-WA concrete vault with a 4874 aluminum double torsion door with a recessed padlock hasp, two - 18" x 24" center knockouts.

x. VALVE, METER: Mueller, B24265-1, Mueller 300 ball angle meter valve, female iron pipe by meter nut, quarter turn check, lock wing, tested to meet ANSI/AWWA C800 specification. Size: 1".

Mueller, B25170, Mueller 300 ball straight valve, conductive compression by female iron pipe, quarter turn check, lock wing, tested to meet ANSI/AWWA C800 specification. Size: 1".

y. YOKES, METER: Relocator type copper meter yoke with horizontal inlet and outlet and meter thread ends, B24118, with lock wing Mueller 300 angle ball valve, full port, sizes: 1" x 12", 5/8" x ¾" x 7", 5/8 x ¾" x 9".

Mueller, 2" copper meter yoke with horizontal inlet and outlet and female iron pipe threads, B2423-99000, with lock wing Mueller 300 ball angle meter valves on inlet and outlet risers. Raised 1" by-pass with lock wing Mueller 300 ball valve.

The Contractor also will be required to provide the following materials, the cost of which will be included in its unit bid price:

All material and concrete for thrust blocks, other anchors, reinforcing steel; all gravel, crushed stone, A.B.C., earth, sand, or screened material which may be required; all material for bracing and shoring trenches and for construction of forms; all barricades and traffic control equipment; all material for paving replacement and any water used for compaction of backfill.

5. INSTALLATION OF MATERIALS

All materials are to be installed in accordance with manufacturer's recommendations unless otherwise directed by these S pecifications.

All pipe, fittings and valves shall be laid true to the lines, grades and locations established by the Specifications and the Construction Drawings.

The ends and inside of the pipe shall be thoroughly cleaned and inspected for damage. No damaged materials shall be installed in the water distribution system .

Whenever the work ceases for any reason, all open pipeline ends shall be tightly plugged by the Contractor. Plugs shall be watertight and approved by the company.

Concrete thrust blocks of the sizes required by the plans and specifications are to be provided at all valves, changes in direction or size, or at any other point where an unbalanced thrust due to water pressure would exist. Thrust blocks are to be formed to prevent any concrete from spilling over or into a joint.

Trench curves as shown on the Construction Drawings may be made without fittings when using push on joint pipe up to twelve inches (12") in diameter, if the deflection of the pipe does not exceed five degrees (5°) or nineteen inches (19") per eighteen-foot (18') length of pipe. The minimum radius of such curves will be two hundred five feet (205').

Prior to construction, the appropriate agency(ies) will be notified as required by the permit(s).

It shall be the Contractor's responsibility to uncover all existing water lines being connected to, and to verify the location, depth and size of pipe befor e any construction begins.

Any construction performed without the knowledge of the duly authorized representative is liable for removal and replacem ent at the Contractor's expense.

All fire hydrants, frames, covers and valve boxes, etc. shall be adjusted to finished grade prior to the placing of the asphalt concrete surface course by the Contractor (where applicable).

Air release valves shall be installed at water system high points per Standard Detail E-9-8-2.

All water services shall be set a minimum of two feet (2') on the customer's property, preferably within the P.U.E. and not within right-of-way.

Unless otherwise specified on the construction drawings, all water mains shall be installed five feet (5') from the property line inside the right-of-way or easement.

Water valves shall be spaced not more than five hundred feet (500') in commercial districts and not more than eight hundred feet (800') in other districts. Variations may be required for transmission mains or special applications.

Installation of water line casing shall be per Standard Speci fication E-9-24-1.

Tracer Wire and Warning Tape are to be installed on all mains, tees, crosses, ells and fire hydrant laterals. They will not be installed on service lines. The tracer wire will be installed on the water main 45 degrees from the vertical centerline of the pipe and shall be taped to the fittings directly and on the main every 10 feet using a minimum 10 mil vinyl tape. The tracer wire shall be placed between the valve riser and box with a minimum of 12" of wire inside. The warning tape shall be installed a minimum of two feet below the surface, being measured from final grade, directly over the center of the pipe. Any splices in the tracer wire shall be joined using waterproof connectors. Any splices in the warning tape shall be joined using minimum 10 mil vinyl tape. The tracer wire shall be tested for continuity after backfill and compaction, but before paving. Any detected damages to the wire shall be repaired before paving will be allowed.

6. BACKFILL OF WATER MAIN TRENCHES

Backfill of any excavation shall conform to the requirements of any of the governmental agencies having jurisdiction over the location. If no governmental agency having such jurisdiction specifies backfill or compaction requirements, and no special requirements are shown on the Construction Drawings, the procedure set forth in this section will apply for water line trenches.

The bedding material above the pipe and backfill material shall be compacted to a minimum of 70% compaction within a utility easement and 80% compaction within a right-of-way as determined by AASHTO T-99 method A and T-191. If water settling is used for compaction, it is the responsibility of the Contractor to prevent the pipe from floating.

The bedding material shall be either native material, 100% of which will pass through a one and one-half inch (1½") screen and at least 20% of which will pass through a number-8 screen, or imported material which conforms to M.A.G. specifications for A.B.C. or type-B

select materials. Bedding material shall be used below and around the pipe and a minimum of twelve inches (12") above the pipe. Shade and bedding material to be mechanically compacted prior to remainder of trench back-fill.

The remainder of the trench shall be backfilled with native or imported material which shall be of sound earthen material free from broken concrete, wood, broken pavement, or other unsuitable substances. Except as otherwise specified, backfill may be material containing no pieces larger than six inches (6") in greatest dimension.

Where settlement occurs, additional backfill material shall be placed and compacted and the trench shall be brought to final grade.

7. HYDROSTATIC TESTING OF COMPLETED PIPELINES

Hydrostatic testing of water pipelines will be completed before the new system is connected into the existing water system so that all testing can be done against all new materials.

The completed section of water pipeline to be tested shall be slowly filled with water with care being taken to expel all air from the pipe. If necessary, the pipe will be tapped at high points to vent air.

The Contractor shall provide all equipment and labor necessary to accomplish this testing and the price shall be included in the unit prices. The Contractor shall notify the Company in advance of the testing so that the Company can schedule a duly authorized representative to be at the site during testing. The Contractor, at its own expense, shall make any necessary repairs to the system being tested in order to cause the section being tested to meet the test limits set below. The Contractor may request authorization of the Company to connect the new pipelines to the existing system prior to completion of pressure testing when, in the Company's sole opinion and judgment, conditi ons warrant such connection.

The Contractor shall assume all responsibility to complete pressure testing to Company's specifications after such connection, including, but not limited to, isolation of the new pipelines from the existing system, if necessary.

Connections prior to completion of pressure testing shall not be made unless prior Company authorization has been obtained, and any extra expenses resulting from such connections shall be the sole responsibi lity of the Contractor.

Leakage tests will be for a period of two hours at 200± 5 psi at the point of lowest elevation; leakage may not exceed 0.1 gallons per hour per one thousand feet (1,000') of pipe per inch of diameter. If dry utilities are not installed, a second pressure test is required.

8. STERILIZATION AND FLUSHING OF COMPLETED WATER PIPELINES

Sterilization and flushing will conform to recommendations of Arizona State Department of Health Services Engineering Bulletin Number 8, latest edition, or any future Arizona Department of Environmental Quality bulletins. Contractor to follow all conditions of any discharge permit.

9. NO OTHER UTILITIES ALLOWED IN OR NEAR WATER PIPELINE TRENCHES

No other utility installations will be permitted in the water pipeline trench or within five feet (5') of the Company's water pipeline when running parallel to the water pipelines.

10. PROTECTION OF WATER MAINS NEAR SEWERS

In order to protect water mains from contamination by sewers, the installation of the water mains must conform to the following requirements:

a. Horizontal - When water lines and sewers are laid parallel with each other, the horizontal distance between them shall not be less than six feet (6'). Each line shall be laid on undisturbed or bedded material in a separate trench. Where conditions prevent the minimum horizontal separation set forth above, extra protection will be required. Extra protection shall consist of constructing the sewer main with mechanical joint ductile iron pipe or with slip-joint ductile iron pipe if joint restraint is provided, or encasing both the water main and sewer main in concrete. See Detail E-9-30-1 and E-9-30-2

The Construction Drawings shall indicate the installation requirements. The drawings showing these exceptions shall have been approved by the appropriate state and/or county health department. Refer to the diagram below for clarification.

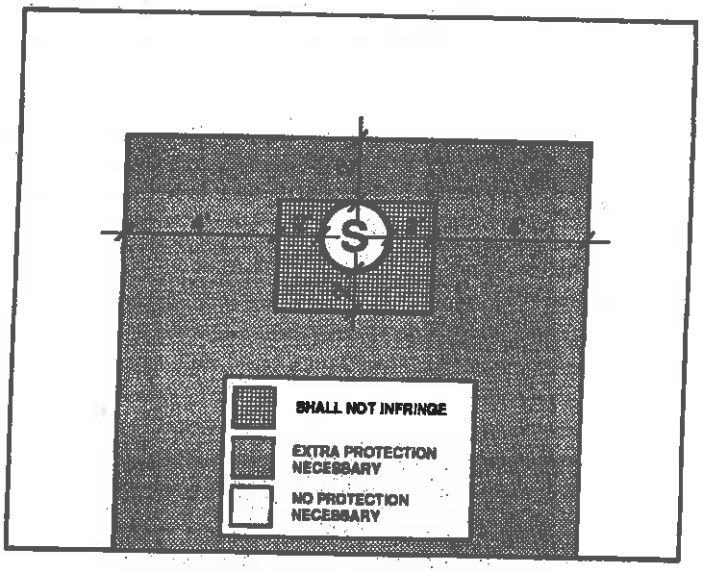

Under no circumstances will the horizontal separation between sewer mains and water mains be less than two feet (2'). All distances are to be measured from the outside of the sewer main to the outside of the water main.

b. Vertical - When a water main is parallel with or crosses a sewer main within two feet (2') above the sewer or greater than two feet (2') below the sewer, extra protection will be required. Extra protection shall consist of constructing the sewer main with mechanical joint ductile iron pipe or with slip-joint ductile iron pipe if joint restraint is provided, or encasing both the water main and sewer main in concrete. See Detail E-9-30-1 and E-9-30-2.

The Construction Drawings shall indicate the installation requirements. The drawings showing these exceptions shall have been approved by the appropriate state and/or county health department.

Under no circumstances will the vertical separation of a sewer main installed above a water main be less than two feet (2'). All distances are to be measured from the outside of the sewer main to the outside of the water main. Refer to the diagram above for clarification.

c. When unusual conditions such as, but not limited to, highway or bridge crossings prevent the water and sewer main separations required from being met, the appropriate state and/or county health department will review and may approve requests for authorization to use alternate construction techniques, materials and joints on a case-by-case basis.

d. No water pipe shall pass through or come into contact with any part of a sewer manhole. The minimum horizontal separation between water mains and manholes shall be six feet (6'), measured from the center of the manhole.

e. The minimum separation between force mains or pressure sewers and water mains shall be two feet (2') vertically and six feet (6') horizontally under all conditions. Where a sewer force main crosses above, or less than six feet (6') below, a water line, the sewer main shall be encased in at least six inches (6") of concrete for ten feet (10') on either side of the water main. Refer to the diagram below for clarification.

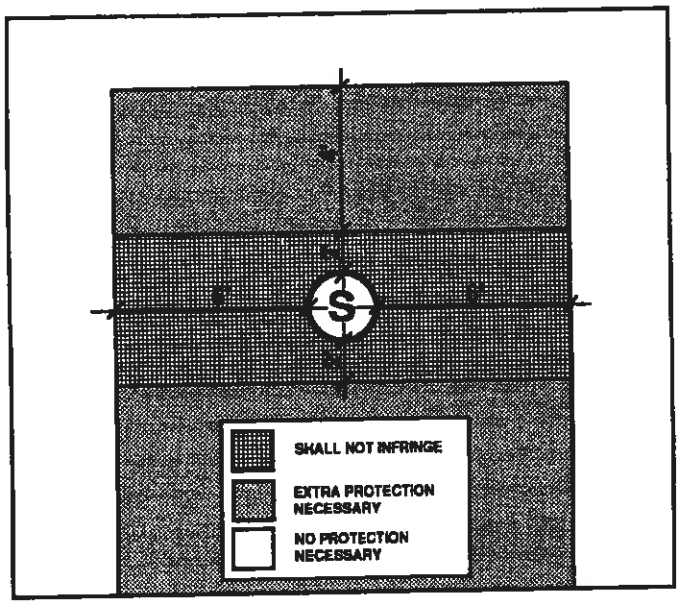

f. Sewer mains (gravity, pressure, force) shall be kept a minimum of fifty feet (50') from drinking water wells, unless the following conditions are met:

1. Water main pipe, pressure tested in place to 50 psi without excessive leakage, may be used for gravity sewers at distances greater than twenty feet (20') from drinking water wells.

2. Water main pipe, pressure tested in place to 150 psi without excessive leakage, may be used for pressure sewers and force mains at distances greater than twenty feet (20') from drinking water wells.

g. No septic tank/disposal field system shall be constructed within one hundred feet (100') of a drinking water well.

h. All distances are measured perpendicularly from the outside of the sewer main to the outside of the water main. These separation requirements do not apply to building, plumbing or individual house service connections.

i. Use Mechanical Joint ductile iron pipe with Megalug thrust restraints a minimum of ten (10') feet on each side of a sewer or storm drain crossing.

11. COMPACTION

When crossing existing water mains a minimum of 95% compaction is required to the bottom of existing mains.

Arizona Water Company requires that no slurry be permitted to contact existing cement/asbestos or ductile iron pipes, unless authorized by the company. Slurry may be poured in the bottom of the sewer trench stopping three inches (3") below the existing water main. The backfill used around the main should be AB in sufficient depth to prevent slurry from contacting existing main.

12. WATER MAIN MATERIAL SPECIFICATIONS

Ductile iron pipe (Push-on type) minimum class 350, cement lined and conform to AWWA C151.

All main line valves shall conform to AWWA C500 with a minimum working pressure of 200 psi.

All cast iron fittings to be cement lined in accordance with AWWA C104 and shall conform to AWWA C110 with a minimum working pressure of 250 psi. Except for the Coolidge System – See Note 4L.

Maximum joint deflection for 6" mechanical joint ductile iron pipe is seven degrees, seven minutes (7°, 7') or twenty-seven inches (27") per eighteen-foot (18') length pipe, for a maximum curve of one hundred forty-five feet (145').
Maximum joint deflection for 8" and 12" mechanical joint ductile iron pipe is five degrees, twenty-one minutes (5° 21') or twenty inches (20") per eighteen-foot (18') length pipe, for a maximum curve of one hundred ninety-five feet (195').

Maximum joint deflection for 6", 8" and 12" push-on joint ductile iron pipe is five degrees (5°) or nineteen inches (19") per eighteen-foot (18') length pipe for a maximum curve of two hundred five feet (205').

ARIZONA WATER COMPANY

3805 N. BLACK CANYON HIGHWAY, PHOENIX, ARIZONA 85015-5351 • P.O. BOX 29006, PHOENIX, ARIZONA 85038-9006
PHONE: (602) 240-6860 • FAX: (602) 240-6878 • WWW.AZWATER.COM

November 24, 2010

Mr. Tony Geiger
US Pipe – Waterworks Marketing Consultants
34522 N. Scottsdale Road
Scottsdale, Arizona 85226

Re: US Pipe Sentinel Fire Hydrants and Resilient Wedge Gate Valves

Dear Mr. Geiger:

Thank you for your interest in working with Arizona Water Company (the "Company") to add US Pipe Sentinel Fire Hydrants and Resilient Wedge Gate Valves to the Company's material and equipment specifications. Based on the US Pipe product information you provided and your field presentations to our operations and engineering staff, the Company is pleased to inform you that the following items are approved for use in the Company's water systems in Arizona.

Sentinel Fire Hydrant:

- Model Sentinel 250
  - 5¼" MVO
  - 4½" pumper
  - 2½" hose
  - Meets AWWA C-502 standard and approval by ULFM

Resilient Wedge Gate Valves:

- Model US Pipe A-USP0
  - Meets AWWA C-509 Full Body Cast Iron <u>includes</u> 304 SS Nuts, Bolts & Low Zinc Bronze Stem
  - Size range 2" thru 12"
- Model US Pipe A-USP1
  - Meets AWWA C-515 Reduced Wall Ductile Iron <u>includes</u> 304 SS Nuts, Bolts & Low Zinc Bronze Stem
  - Size range 14" thru 48"

We look forward to developing a long-term relationship with you and the US Pipe products. If I can be of any assistance, please call me.

Very truly yours,

Fredrick K. Schneider
Vice President – Engineering

afh

VIA EMAIL: TGEIGER4@COX.NET

ARIZONA WATER COMPANY

3805 N. BLACK CANYON HIGHWAY, PHOENIX, ARIZONA 85015-5351 • P.O. BOX 29006, PHOENIX, ARIZONA 85038-9006
PHONE: (602) 240-6860 • FAX: (602) 240-6878 • WWW.AZWATER.COM

October 19, 2010

Mr. Jim Ryan
Clow Valve Company
8121 N. 10th Avenue
Phoenix, Arizona 85021

Re: Clow Medallion Fire Hydrants and Resilient Wedge Gate Valves

Dear Mr. Ryan:

Thank you for your interest in working with Arizona Water Company (the "Company") to add Clow Medallion Fire Hydrants and Resilient Wedge Gate Valves to the Company's material and equipment specifications. Based on the Clow product information you provided and your field presentations to our operations and engineering staff, the Company is pleased to inform you that the following items are approved for use in the Company's water systems in Arizona.

Medallion Fire Hydrant:

- Model F-2545
  - 5¼" MVO
  - 4½" pumper
  - 2½" hose
  - Meets AWWA C-502 standard and approval by ULFM

Resilient Wedge Gate Valves:

- Model 2639 & 2640
  - Meets AWWA C-509 Full Body Cast Iron includes 304 SS Nuts, Bolts & Low Zinc Bronze Stem
  - Size range 2½" thru 12"
- Model 2638
  - Meets AWWA C-515 Reduced Wall Ductile Iron includes 304 SS Nuts, Bolts & Low Zinc Bronze Stem
  - Size range 14" thru 48"

We look forward to developing a long-term relationship with you and the Clow products. If I can be of any assistance, please call me.

Very truly yours,

Fredrick K. Schneider
Vice President – Engineering

lar

VIA EMAIL: JIM.RYAN@CLOWVALVE.COM

February 21, 2012

Contractor

Re: Fitting Specifications

Dear Contractor:

Effective March 1, 2012, Arizona Water Company (the "Company") has changed its fitting specifications for Ductile Iron Fittings and Ductile Iron Flanged Fittings ("Fittings"). All Fittings purchased by the Company, on the Company's behalf or installed with the intent of being conveyed to the Company, must comply with the requirements noted below.

Previous Fitting Specifications:

Fittings

Manufactured by Tyler or Union, Crosses, Elbows, Tees, Cap Reducer, Adapter, Plug, Blind Flange and Tapped Flange: Ductile Iron, Class 350, SSB, and Cast Iron Cement Lined.

New Fitting Specification:

Ductile Iron Fittings (Push-On and Mechanical Joint)

Ductile Iron Push-On and Mechanical Joint ("MJ") fittings for water lines shall be made of ductile iron per ASTM A536 and be cast in the United States of America. Fittings shall have USA cast on the fitting to designate they are made in the United States. All fittings will be manufactured and tested in accordance with ANSI/AWWA C153/A21.53 for compact design and ANSI/AWWA C110/A21.10 for full body design. In accordance with ANSI/AWWA C104/A21.4 fittings 2" – 3" will be single thickness cement mortar lined and 4" – 64" will be cement mortar lined. Fittings will be Asphaltic seal coated on the exterior in accordance with ANSI/AWWA C104/A21.4. MJ fittings with flanged end(s) will match ANSI/AWWA C115/A21.15 and ANSI B16.1 class 125 flanges. All fittings shall be NSF-61 listed for use with potable water.

Ductile Iron Flanged Fittings

Ductile Iron flanged fittings for water lines shall be made of ductile iron per ASTM A536 and be cast in the United States of America. Fittings shall have USA cast on the fitting to designate they are made in the United States. All fittings will be manufactured and tested in accordance with ANSI/AWWA C110/A21.10 design. Flange ends will match ANSI/AWWA C115/A21.15 and ANSI B16.1 class 125 flanges. In accordance with ANSI/AWWA C104/A21.4 fittings 2" – 3" will be single thickness lined and 4" – 64" will be cement mortar lined. Fittings will be Asphaltic seal coated on the exterior in accordance with ANSI/AWWA C104/A21.4. All fittings shall be NSF-61 listed for use with potable water.

If you have any questions or require further information, please contact me at 602-240-6860.

Very truly yours,

Fredrick K. Schneider, PE
Vice President - Engineering
engineering@azwater.com

afh
Enclosure

ARIZONA WATER COMPANY

STANDARD SPECIFICATION DRAWINGS: E-9-1

ERRATA 2010

ARIZONA WATER COMPANY

STANDARD SPECIFICATION DRAWINGS - DUCTILE IRON

INDEX (E-9)

E-9-1	TYPICAL GATE VALVE LOCATIONS
E-9-2	INSTALLATION OF TYPICAL VERTICAL AND HORIZONTAL GATE VALVES
E-9-3	INSTALLATION OF TYPICAL TAPPING SLEEVE AND VALVE
E-9-4	INSTALLATION OF TYPICAL VALVE SUBJECT TO NON-VEHICULAR AND VEHICULAR TRAFFIC
E-9-5	INSTALLATION OF TYPICAL THRUST BLOCKING SCHEDULE THRUST BLOCK FOR VERTICAL BENDS, AND MEGALUG THRUST RESTRAINTS
E-9-6	INSTALLATION OF TYPICAL PERPENDICULAR FIRE HYDRANT
E-9-7	INSTALLATION OF TYPICAL PARALLEL FIRE HYDRANT
E-9-8	INSTALLATION OF TYPICAL 2" BLOWOFF DEVICE, AND AIR RELEASE VALVE
E-9-9	INSTALLATION OF TYPICAL SINGLE SERVICE CONNECTION FOR A $^3/_4$" OR 1" METER
E-9-10	INSTALLATION OF TYPICAL DOUBLE SERVICE CONNECTION FOR A $^3/_4$" AND 1" METER
E-9-11	INSTALLATION OF TYPICAL 2" SERVICE CONNECTION
E-9-12	INSTALLATION OF 3" COMPOUND METER, 4" COMPOUND METER, 6" COMPOUND METER, 6" COMPOUND SERVICE, CONCRETE VAULT, AND NON-POTABLE PROPELLER METER
E-9-13	INSTALLATION OF TYPICAL 4" THRU 8" DETECTOR CHECK VALVES AND 3" THRU 10" REDUCED PRESSURE PRINCIPLE DETECTOR WITH BYPASS METER ASSEMBLY (RPDA) FOR FIRE LINE SERVICES
E-9-14	INSTALLATION OF TYPICAL PRESSURE RELIEF VALVE ASSEMBLY
E-9-15	INSTALLATION OF TYPICAL PRESSURE REDUCING STATION
E-9-16	PAINT COLOR SELECTION
E-9-17	STEEL WATER STORAGE TANK
E-9-18	HYDROPNEUMATIC TANK
E-9-19	INSTALLATION OF WELL SHELTER

E-9-20	INSTALLATION OF TYPICAL WELL WITH LINE SHAFT TURBINE PUMP
E-9-21	INSTALLATION OF TYPICAL WELL WITH SUBMERSIBLE TURBINE PUMP
E-9-22	INSTALLATION OF COLUMN PIPE, OIL TUBE AND LINE SHAFT
E-9-23	HOT TAP AND JUMPER METER CONNECTION
E-9-24	INSTALLATION OF TYPICAL WATER LINE ENCASEMENT
E-9-25	INSTALLATION OF CALCIUM HYPOCHLORITE TABLET CHLORINATOR
E-9-26	INSTALLATION OF CHAIN LINK FENCE
E-9-27	INSTALLATION OF SIDE HUNG WATER LINE SUSPENSION
E-9-28	PIPE WARNING TAPE, LOCATOR WIRE, AND LOCATOR WIRE TERMINATION
E-9-29	INSTALLATION OF A TYPICAL SAMPLING STATION
E-9-30-1	WATER AND SANITARY SEWER SEPARATION/PROTECTION PERPENDICULAR
E-9-30-2	WATER AND SANITARY SEWER SEPARATION/PROTECTION – PARALLEL

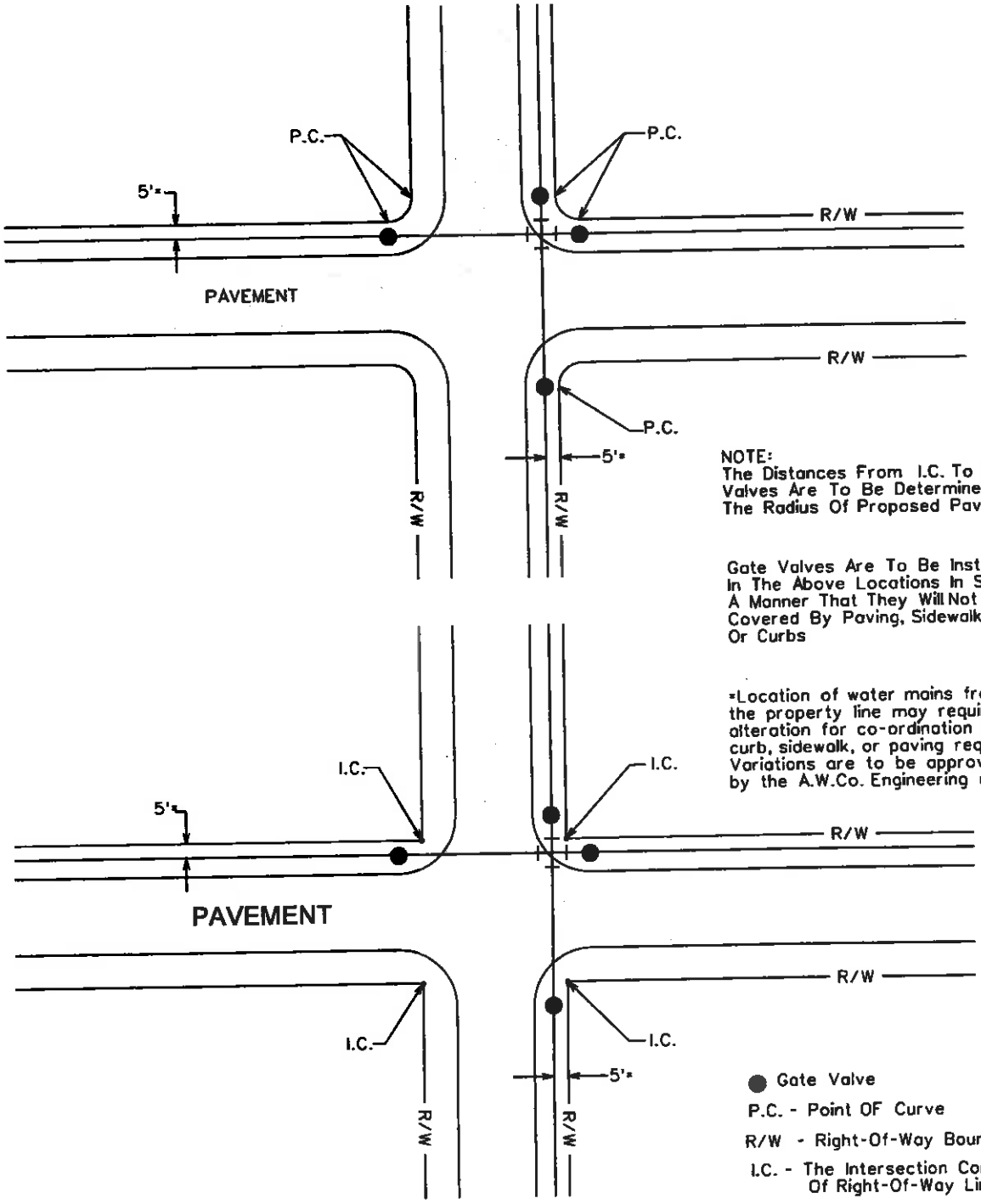

NOTE:
The Distances From I.C. To Gate Valves Are To Be Determined By The Radius Of Proposed Pavement.

Gate Valves Are To Be Installed In The Above Locations In Such A Manner That They Will Not Be Covered By Paving, Sidewalks, Or Curbs

*Location of water mains from the property line may require alteration for co-ordination with curb, sidewalk, or paving requirements. Variations are to be approved by the A.W.Co. Engineering dept.

● Gate Valve

P.C. - Point OF Curve

R/W - Right-Of-Way Boundary

I.C. - The Intersection Corner Of Right-Of-Way Lines

ARIZONA WATER COMPANY

STANDARD SPECIFICATION
FOR THE INSTALLATION OF

TYPICAL GATE VALVE LOCATIONS

DRAWN BY:	APPROVED BY:	DATE		
CCO	M.W.	3/20/86	△ 1/31/2001	E-9-1-1

FOR 6" THROUGH 12" GATE VALVES

Mueller Resilient Wedge Gate Valves
Catalog Number A-2360-__
ANSI/AWWA C509 Compliant

FOR 14" THROUGH 16" GATE VALVES

Mueller Resilient Wedge Gate Valves
Catalog Number A-2361-__
ANSI/AWWA C509 Compliant

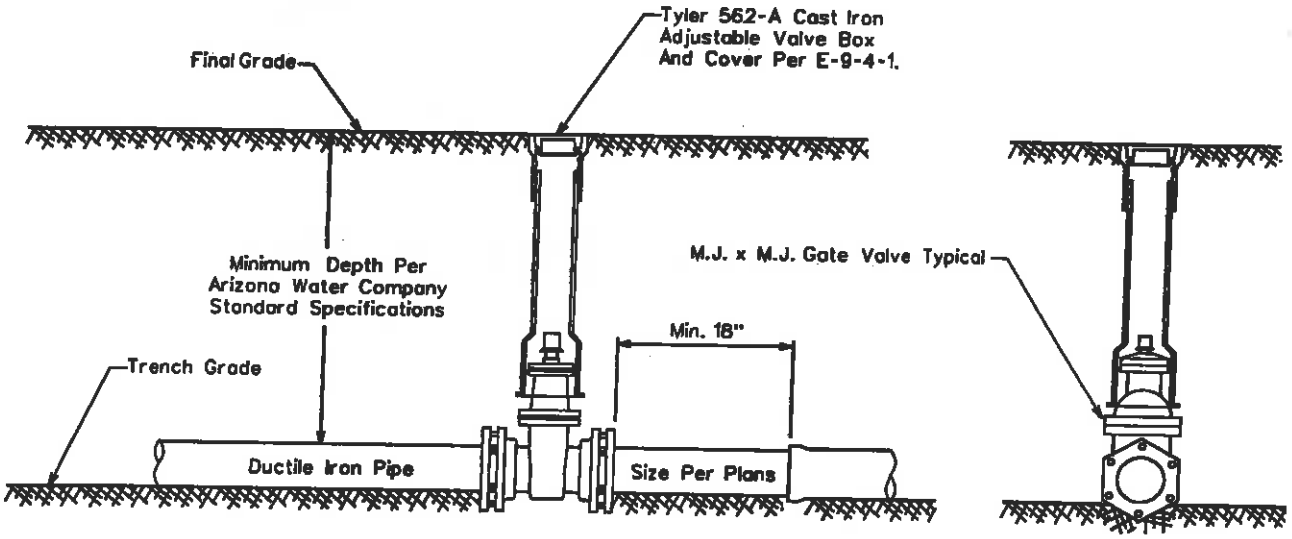

All Valves Installed On Pipe Five Feet (5') Deep And Greater Are To Be Installed With A Valve Operator Extension, Mueller Catalog No. A-26441.

ARIZONA WATER COMPANY

STANDARD SPECIFICATION
FOR THE INSTALLATION OF

TYPICAL VERTICAL GATE VALVES

DRAWN BY:	APPROVED BY:	DATE:	△	
CB	MW	03.20.1986	08.23.2005	E-9-2-1

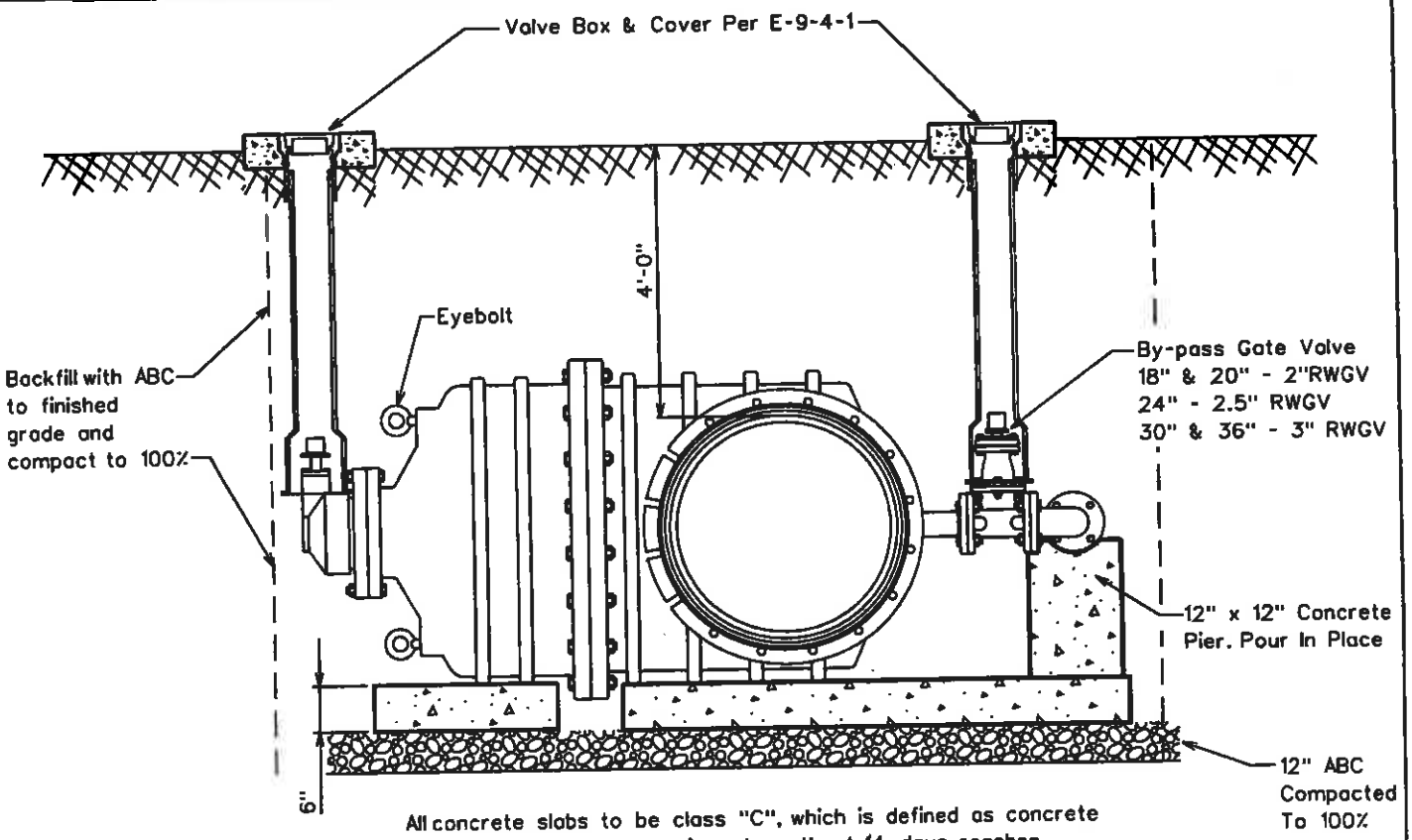

All concrete slabs to be class "C", which is defined as concrete whose minimum compressive strength at 14 days reaches 1600psi and at 28 days reaches 2000psi. per MAG Section 725, Table 725-1. Slabs to be formed and poured prior to valve installation.

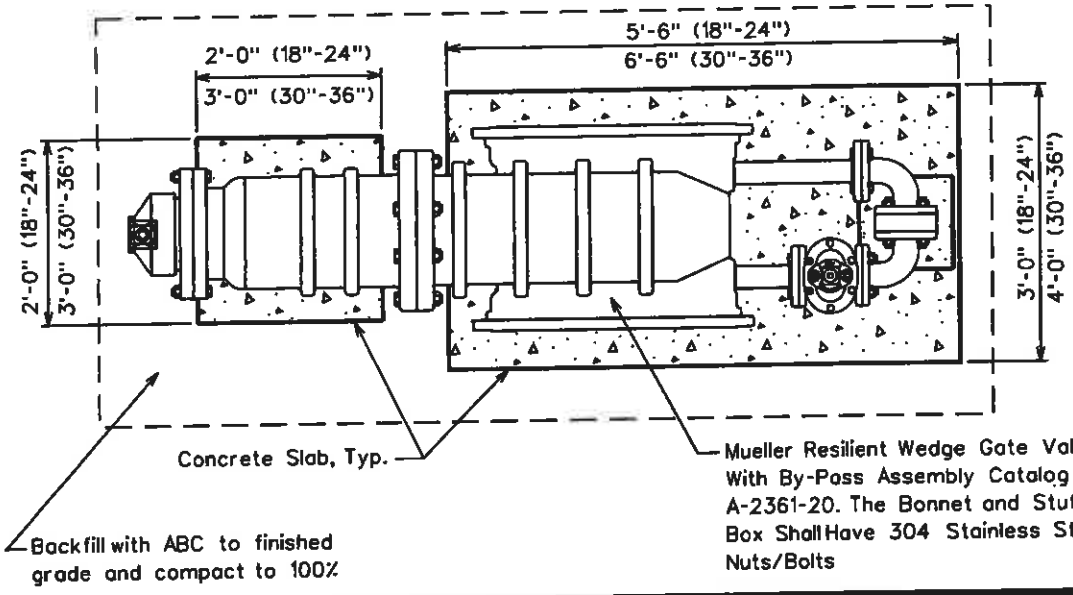

All valves installed on pipe five feet and greater are to be installed with a valve operator extension Mueller catalog No.A-26441 The distance is measured from the top of the operating nut to final grade.

ARIZONA WATER COMPANY

STANDARD SPECIFICATION

FOR THE INSTALLATION OF

INSTALLATION OF BEVEL GEARED HORIZONTAL GATE VALVES WITH BY-PASS FOR 18" AND LARGER VALVES

DRAWN BY:	APPROVED BY:	DATE:	△	
CB		12.07.2004		E-9-2-2

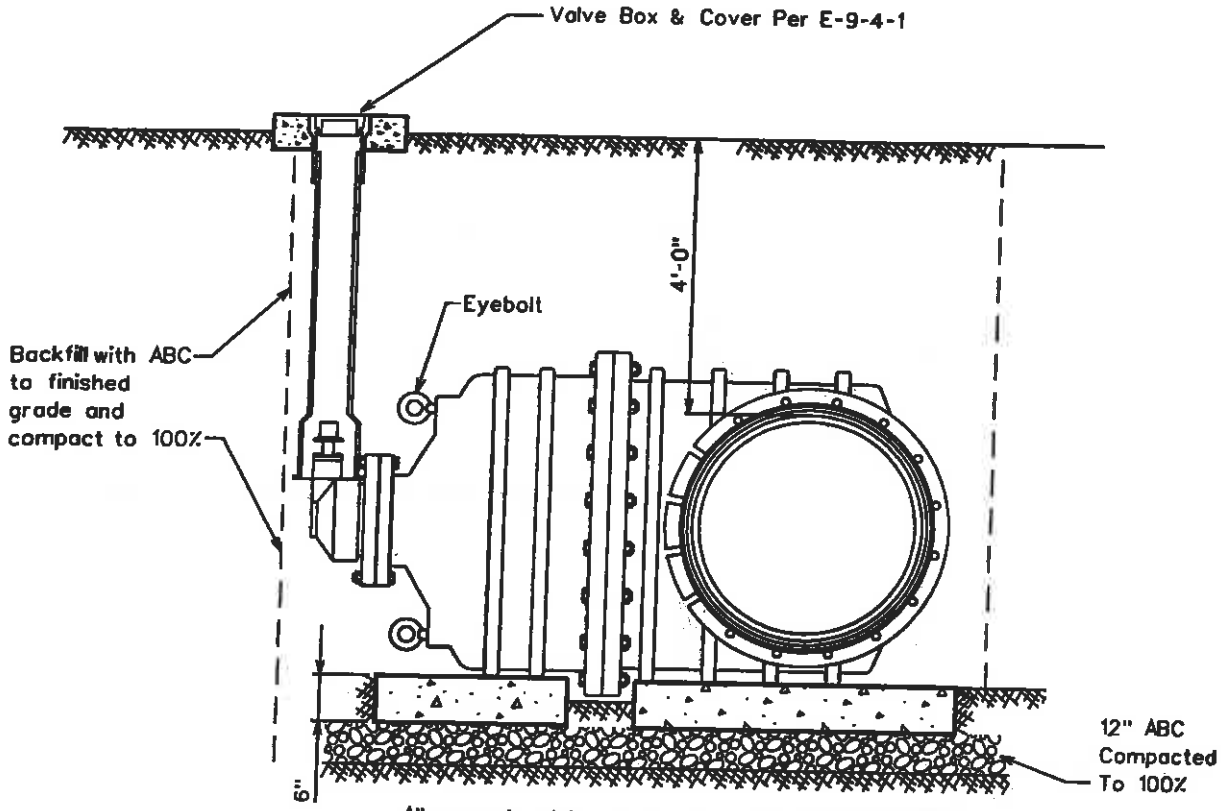

All concrete slabs to be class "C", which is defined as concrete whose minimum compressive strength at 14 days reaches 1600psi and at 28 days reaches 2000psi. per MAG Section 725, Table 725-1. Slabs to be formed and poured prior to valve installation.

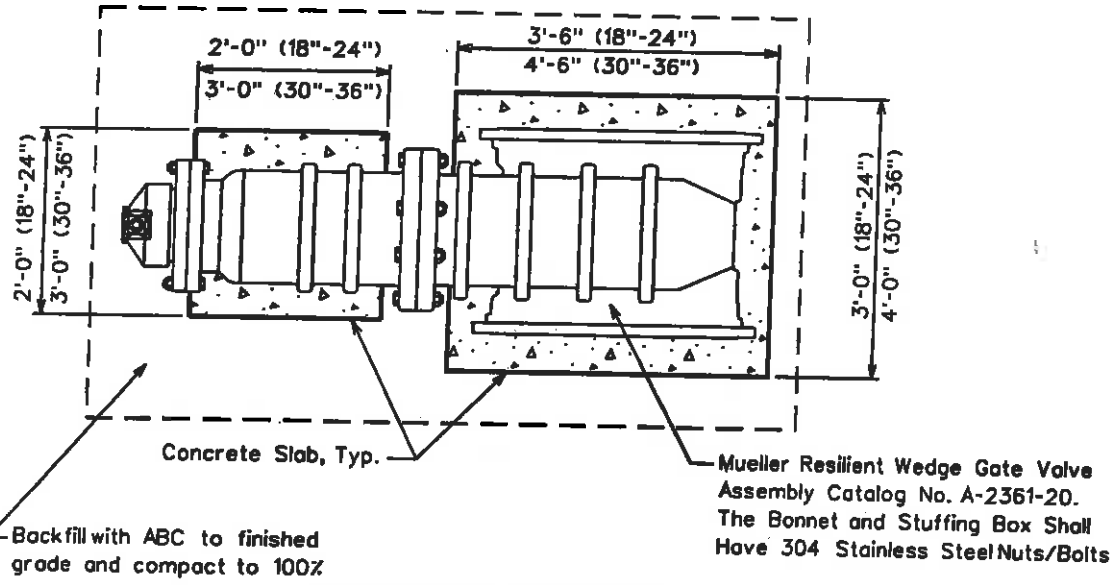

All valves installed on pipe five feet and greater are to be installed with a valve operator extension Mueller catalog No.A-26441 The distance is measured from the top of the operating nut to final grade.

ARIZONA WATER COMPANY

STANDARD SPECIFICATION
FOR THE INSTALLATION OF

INSTALLATION OF BEVEL GEARED HORIZONTAL GATE VALVES WITHOUT A BY-PASS FOR 18" AND LARGER VALVES

DRAWN BY:	APPROVED BY:	DATE:		
CB		12.07.2004	△ 5.13.2005	E-9-2-3

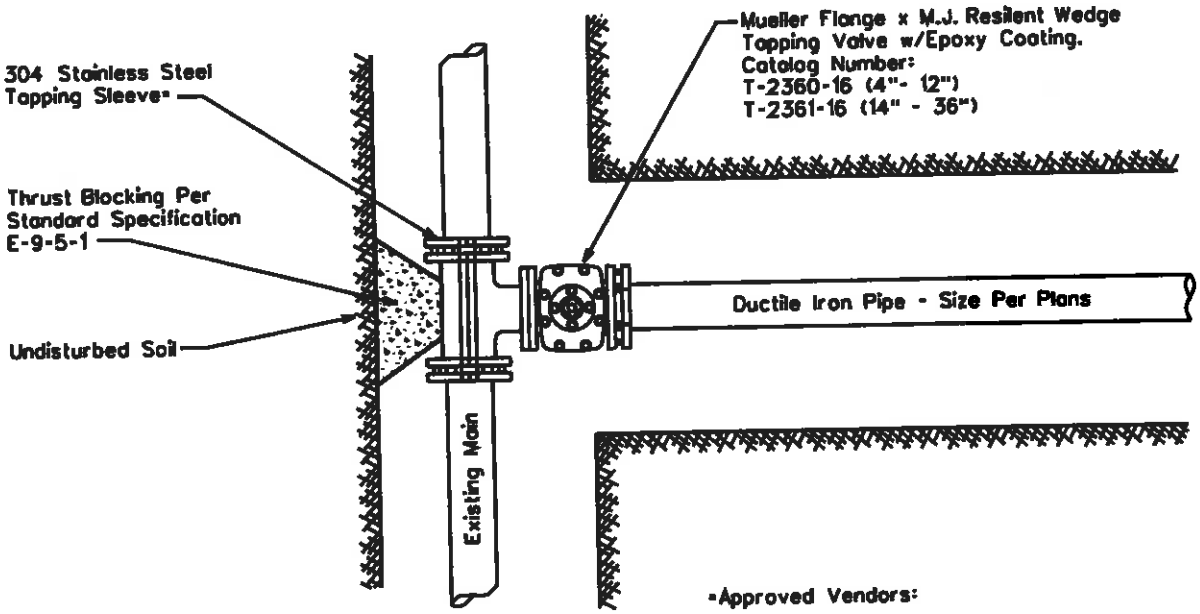

*Approved Vendors:

Mueller, Catalog No. H304, 304 Stainless Steel

JCM, Model 432, 304 Stainless Steel

Romac, 'SST', 304 Stainless Steel

Cascade, 'CST-EX', 304 Stainless Steel

NOTE:

1. All flanges, bolts, and nuts shall be kept free of concrete.
2. Air pressure test the tapping sleeve before the live tap is made.
3. Polywrap all new fittings

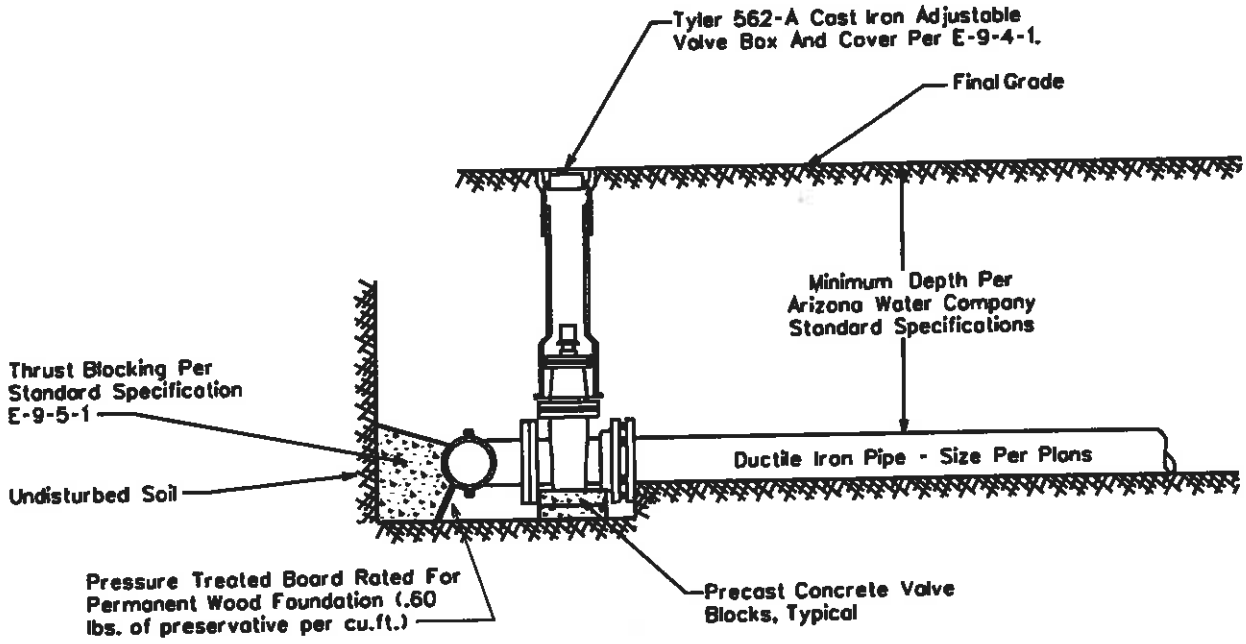

ARIZONA WATER COMPANY

STANDARD SPECIFICATION
FOR THE INSTALLATION OF

TYPICAL TAPPING SLEEVE AND VALVE

DRAWN BY:	APPROVED BY:	DATE:	△	
CB	MW	03.20.1986	08.23.2006	E-9-3-1

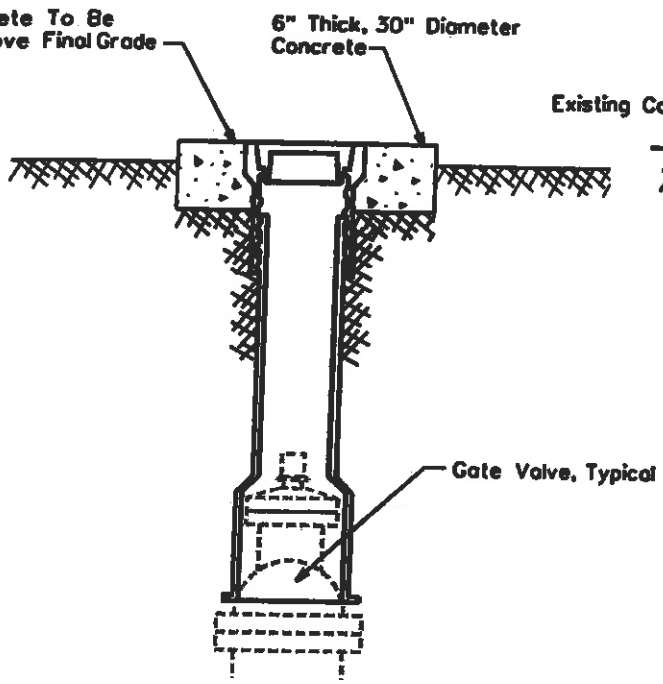

NON-VEHICULAR VALVE BOX

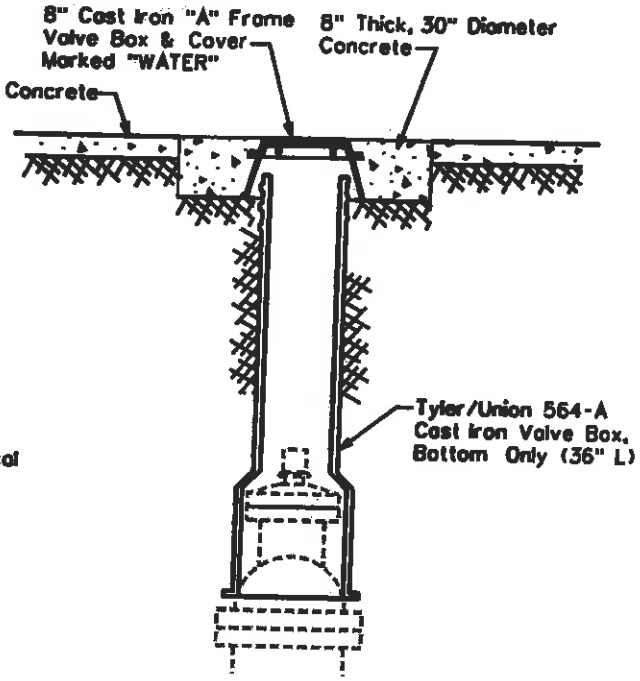

CONCRETE VALVE BOX

For Areas Subject To Vehicular Traffic

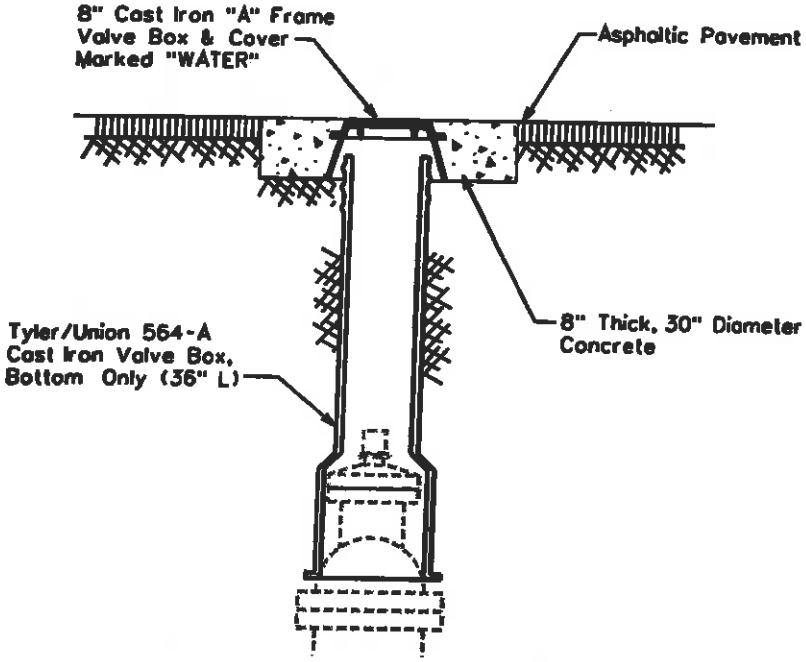

ASPHALT VALVE BOX

For Areas Subject To Vehicular Traffic

NOTE:

1. The Valve Box Shall Be Adjusted To Finished Grade Prior To Placing Of Asphalt And/Or Concrete.
2. For Non-Traffic Areas Use Tyler/Union 562-A, Two-Piece, 6855 Series Or Equivalent Adjustable Cast Iron Valve Box And Cover. Valves 4" To 12"

   For Traffic Areas, Use Tyler/Union 564-A Bottom Section Only With An 8" Cast Iron "A" Frame With Cover. Valves 4" To 12"
3. All Valves Installed Five Feet (5') Deep And Greater Are To Be Installed With A Valve Operator Extension, Mueller Catalog No. A-26441 And Shall Have A Debris Cap
4. Use Minimum Class 'C' Concrete which is defined as concrete whose minimum compressive strength at 14 days reaches 1600psi and at 28 days reaches 2000psi. per MAG Section 725, Table 725-1.

ARIZONA WATER COMPANY

STANDARD SPECIFICATION

FOR THE INSTALLATION OF

TYPICAL VALVE SUBJECT TO NON-VEHICULAR AND VEHICULAR TRAFFIC

DRAWN BY:	APPROVED BY:	DATE:	△ 8.24.2006	
CB	MW	03.20.1986		E-9-4-1

CROSSES

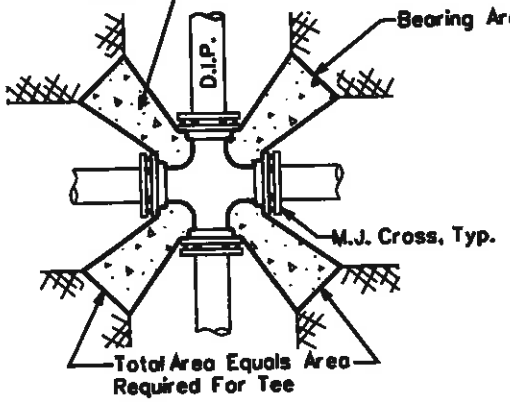

TEES

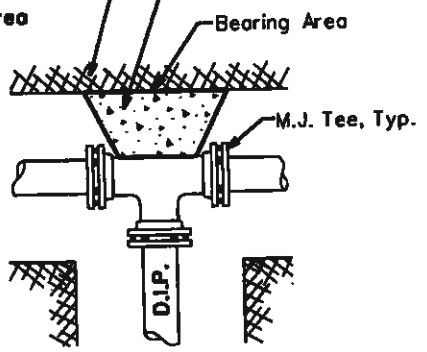

ELLS

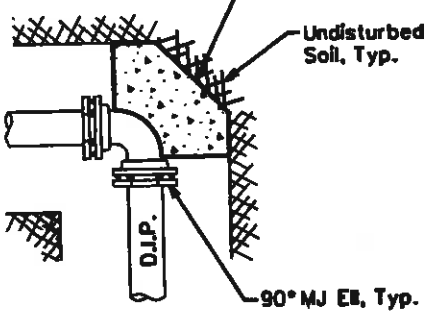

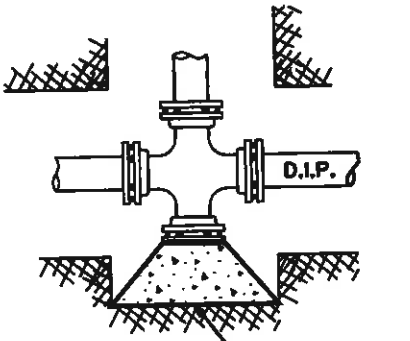

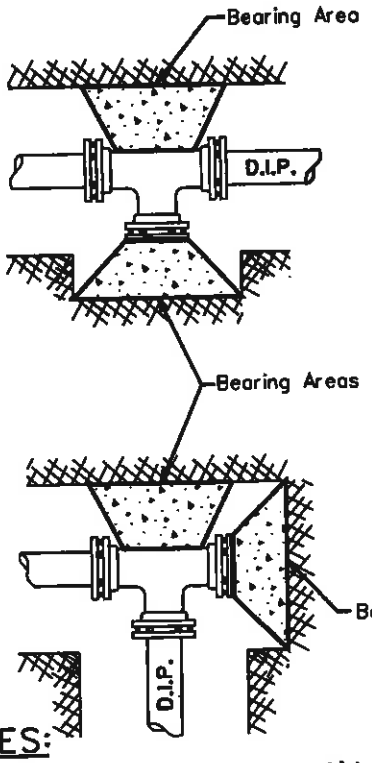

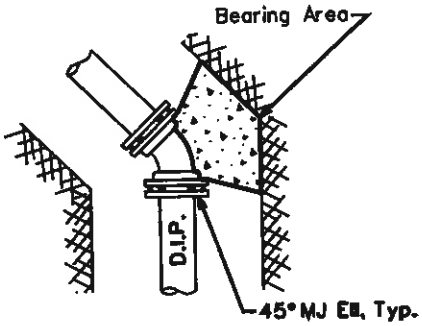

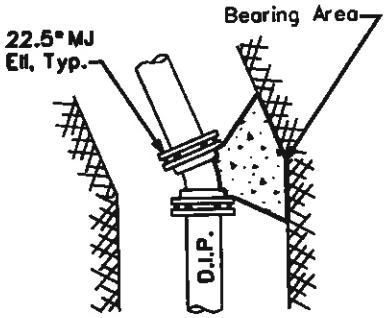

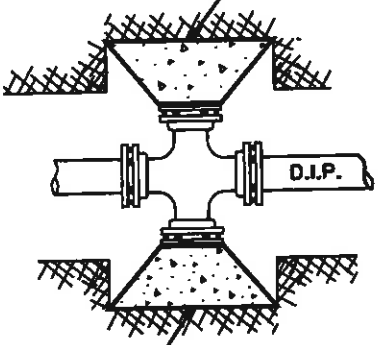

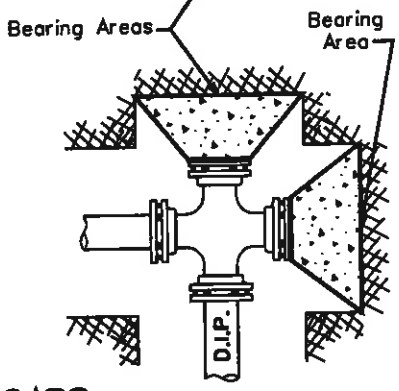

CROSS SECTION

TYPICAL

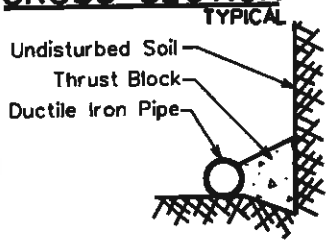

NOTES:

1. Use minimum Class 'C' concrete, which is defined as concrete whose minimum compressive strength at 14 days reaches 1600psi and at 28 days reaches 2000psi. per MAG Section 725, Table 725-1.
2. Thrust blocks are to bear on undisturbed earth with minimum bearing area as shown. If not undisturbed, areas will be increased as required.
3. Place the pressure treated form board in front of all plugs before pouring thrust blocks.
4. Form all non-bearing areas to prevent any concrete from entering any joint.
5. All flanges, bolts and nuts shall be kept free of concrete.
6. Center the bearing area on the pipe centerline and force line.
7. All pipe fittings to be wrapped with polyethylene pipe wrap prior to thrust block installation. (where applicable)

THRUST BLOCK SCHEDULE

PIPE SIZE	TEE, 45°, AND 22.5° ELLS. & PLUGS	90° ELLS
6" And Under	4 Sq.Ft.	6 Sq.Ft.
8"	6 Sq.Ft.	9 Sq.Ft.
12"	13 Sq.Ft.	20 Sq.Ft.
16"	23 Sq.Ft.	32 Sq.Ft.
18" And Larger	Calculated Per Project	

CAPS

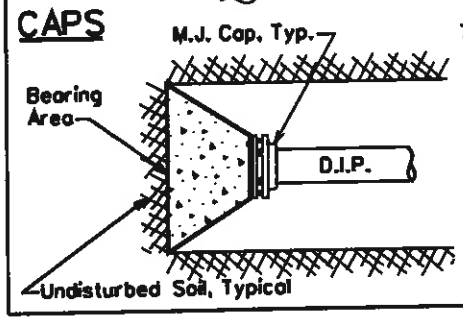

STANDARD SPECIFICATION

FOR THE INSTALLATION OF

TYPICAL THRUST BLOCKING SCHEDULE

DRAWN BY:	APPROVED BY:	DATE	△	
CB	MW	03.20.1986	05.27.2005	E-9-5-1

NOTES

1. Bars In Conc. Thrust Block To Be Coated w/ 2 Coats Coal Tar Epoxy or by Other Approved Method.
2. Bars To Have 90° Hook @ Their Ends, As Per Table Below.

Pipe Size	Min. Bar Size	"A" Dimension (Hook)	* Min. Block Dimension (WxHxL)
6"	#6	6"	3'x3'x3'
8"	#6	9"	4'x3'x4'
12"	#8	9"	5'x4'x5'
16"	#9	12"	7'x6'x7'

* For 125 P.S.I. Working Pressure

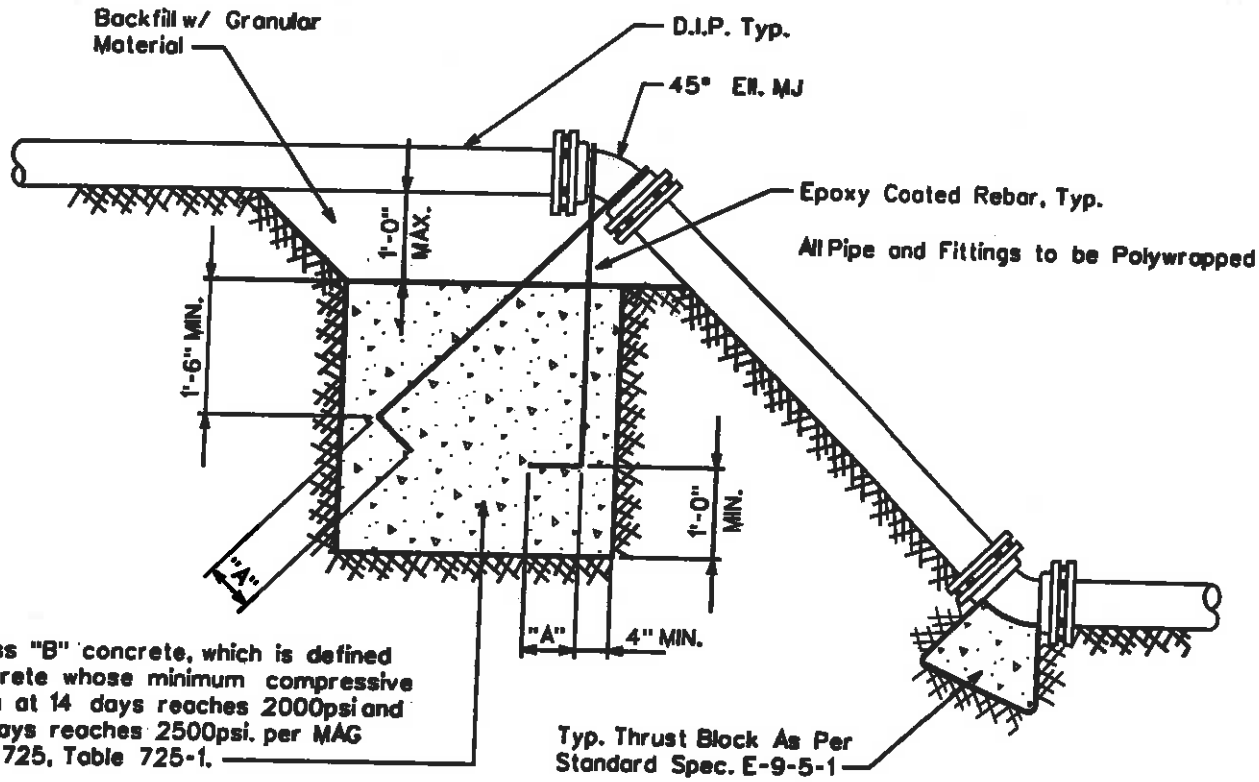

ARIZONA WATER COMPANY

STANDARD SPECIFICATION
FOR THE INSTALLATION OF

THRUST BLOCK FOR VERTICAL BENDS

DRAWN BY:	APPROVED BY:	DATE:		
JPK	MJW	7-5-96	△ 01.16.2007	E-9-5-2

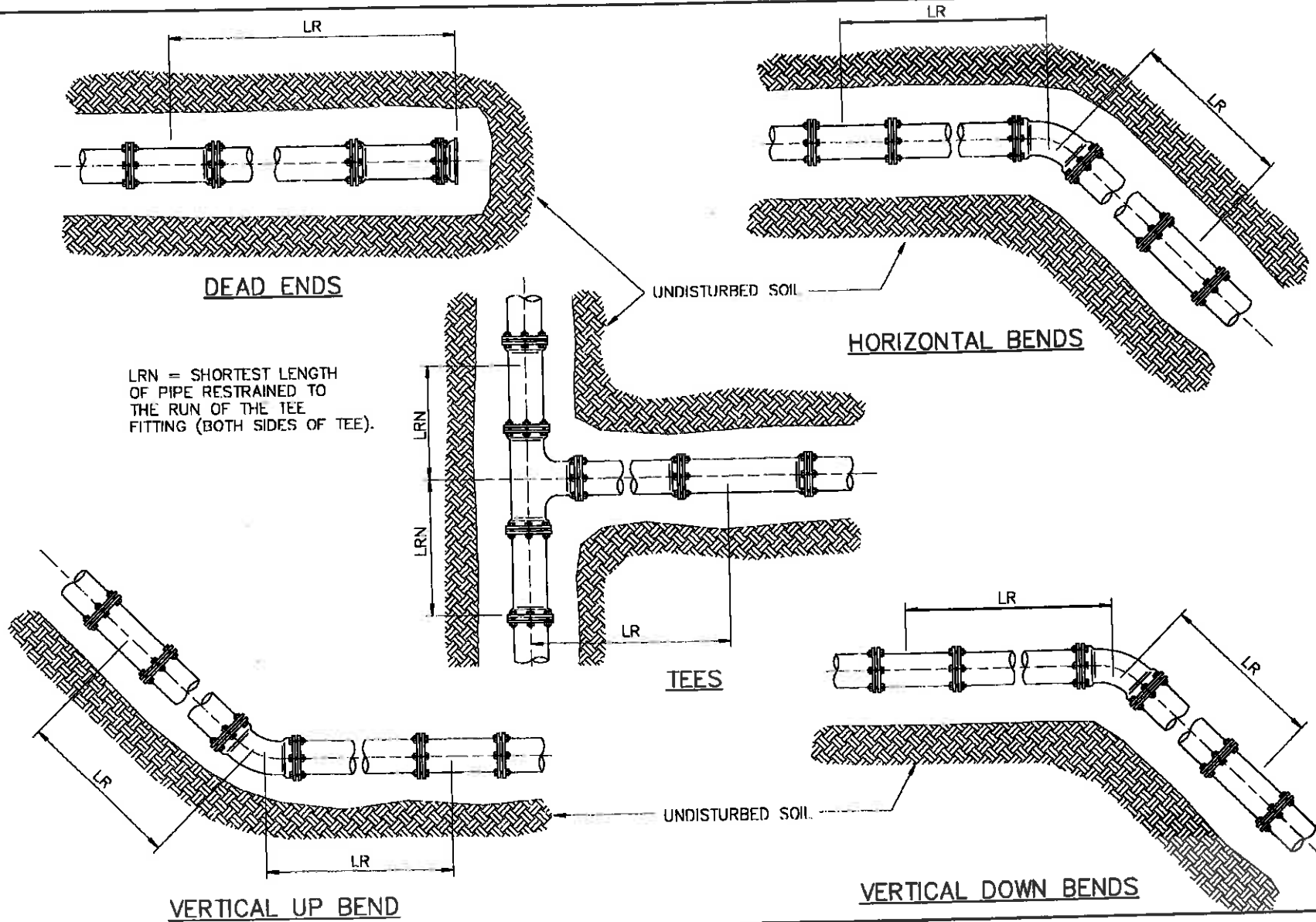

ARIZONA WATER COMPANY

STANDARD SPECIFICATION

FOR THE INSTALLATION OF

JOINT RESTRAINT FOR NEW DUCTILE IRON AND C-900 PVC MAINS

DRAWN BY:	APPROVED BY:	DATE:		
CB	MW	01.16.2007	△	E-9-5-3-1

RESTRAINED LENGTHS, LR, FOR DUCTILE IRON PIPE

NOMINAL PIPE SIZE INCHES	HORIZONTAL BENDS			TEES		VERTICAL OFFSETS						DEAD ENDS
						90° BEND FITTINGS		45° BEND FITTINGS		22-1/2° BEND FITTINGS		
	90°	45°	22-1/2°	LRN=0'	LRN=10'	DOWN BEND	UP BEND	DOWN BEND	UP BEND	DOWN BEND	UP BEND	
4	18	7	4	30	8	31	18	13	7	6	3	31
6	25	10	5	43	20	44	25	18	10	9	5	44
8	32	13	6	56	34	58	32	24	13	11	6	58
10	38	16	8	68	45	69	38	29	16	14	8	69
12	45	19	9	80	57	81	45	34	19	16	9	81
14	51	21	10	91	68	92	51	38	21	18	10	92
16	57	24	11	103	79	104	57	43	24	21	11	104
18	62	26	12	113	90	115	62	48	26	23	12	115
20	68	28	14	125	100	126	68	52	28	25	14	126
24	79	33	16	145	121	147	79	61	33	29	16	147

RESTRAINED LENGTHS, LR, FOR DUCTILE IRON PIPE WITH POLYETHYLENE WRAP

NOMINAL PIPE SIZE INCHES	HORIZONTAL BENDS			TEES		VERTICAL OFFSETS						DEAD ENDS
						90° BEND FITTINGS		45° BEND FITTINGS		22-1/2° BEND FITTINGS		
	90°	45°	22-1/2°	LRN=0'	LRN=10'	DOWN BEND	UP BEND	DOWN BEND	UP BEND	DOWN BEND	UP BEND	
4	26	11	5	69	18	72	26	30	11	14	5	72
6	36	15	7	99	47	102	36	42	15	20	7	102
8	47	19	9	130	78	133	47	55	19	26	9	133
10	56	23	11	157	103	159	56	66	23	32	11	159
12	65	27	13	185	131	187	65	77	27	37	13	187
14	74	31	15	211	156	214	74	89	31	42	15	214
16	82	34	16	238	183	241	82	100	34	48	16	241
18	90	37	18	263	207	266	90	110	38	53	18	266
20	98	41	20	289	233	292	98	121	41	58	20	292
24	113	47	22	337	280	340	113	141	47	68	22	340

NOTES:

1. ALL JOINTS WITHIN THE SPECIFIED LENGTH LR MUST BE RESTRAINED. ALL LENGTHS ARE GIVEN IN FEET.
2. THE MAXIMUM TEST PRESSURE SHALL NOT EXCEED 200 PSI
3. THE MINIMUM DEPTH OF BURY SHALL BE 3' TO TOP OF PIPE.
4. RESTRAINED LENGTHS MAY BE REDUCED WHEN SUPPORTED BY ENGINEERING CALCULATIONS.

ARIZONA WATER COMPANY

STANDARD SPECIFICATION
FOR THE INSTALLATION OF
JOINT RESTRAINT FOR NEW DUCTILE IRON AND C-900 PVC MAINS

DRAWN BY:	APPROVED BY:	DATE:		
CB	MW	01.16.2007	△	E-9-5-3-2

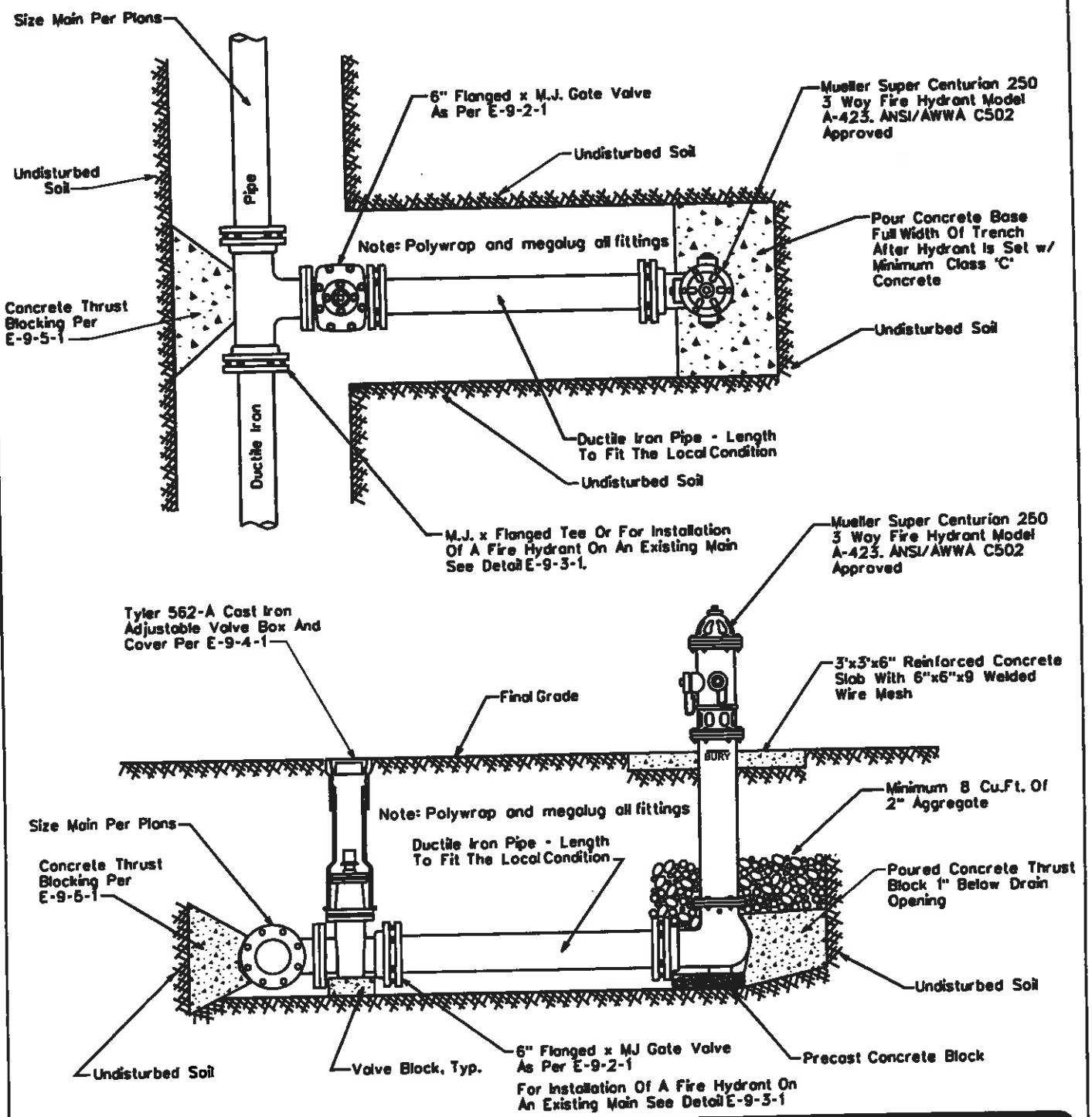

NOTE: All Flanges, Bolts, Nuts and Drain Holes Shall Be Kept Free Of Concrete

ARIZONA WATER COMPANY

STANDARD SPECIFICATION
FOR THE INSTALLATION OF

TYPICAL PERPENDICULAR FIRE HYDRANT

DRAWN BY:	APPROVED BY:	DATE:	△ 08.24.2006	
CB	MW	1-28-91		E-9-6-1

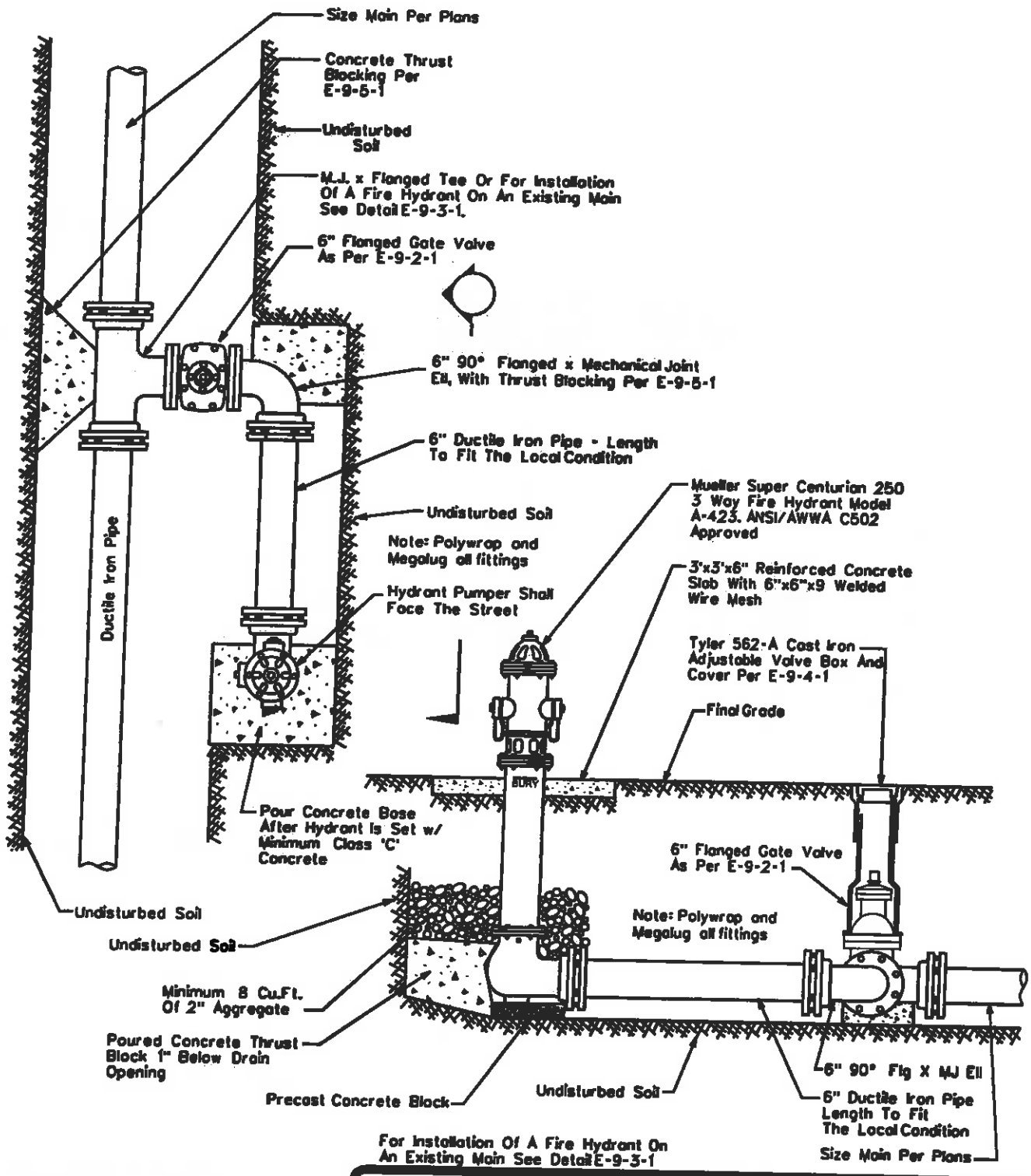

NOTE: All Flanges, Bolts, Nuts And Drain Holes Shall Be Kept Free Of Concrete.

ARIZONA WATER COMPANY

STANDARD SPECIFICATION
FOR THE INSTALLATION OF

TYPICAL PARALLEL FIRE HYDRANT

DRAWN BY:	APPROVED BY:	DATE:	△	
JW	MW	03.20.1986	08.24.2006	E-9-7-1

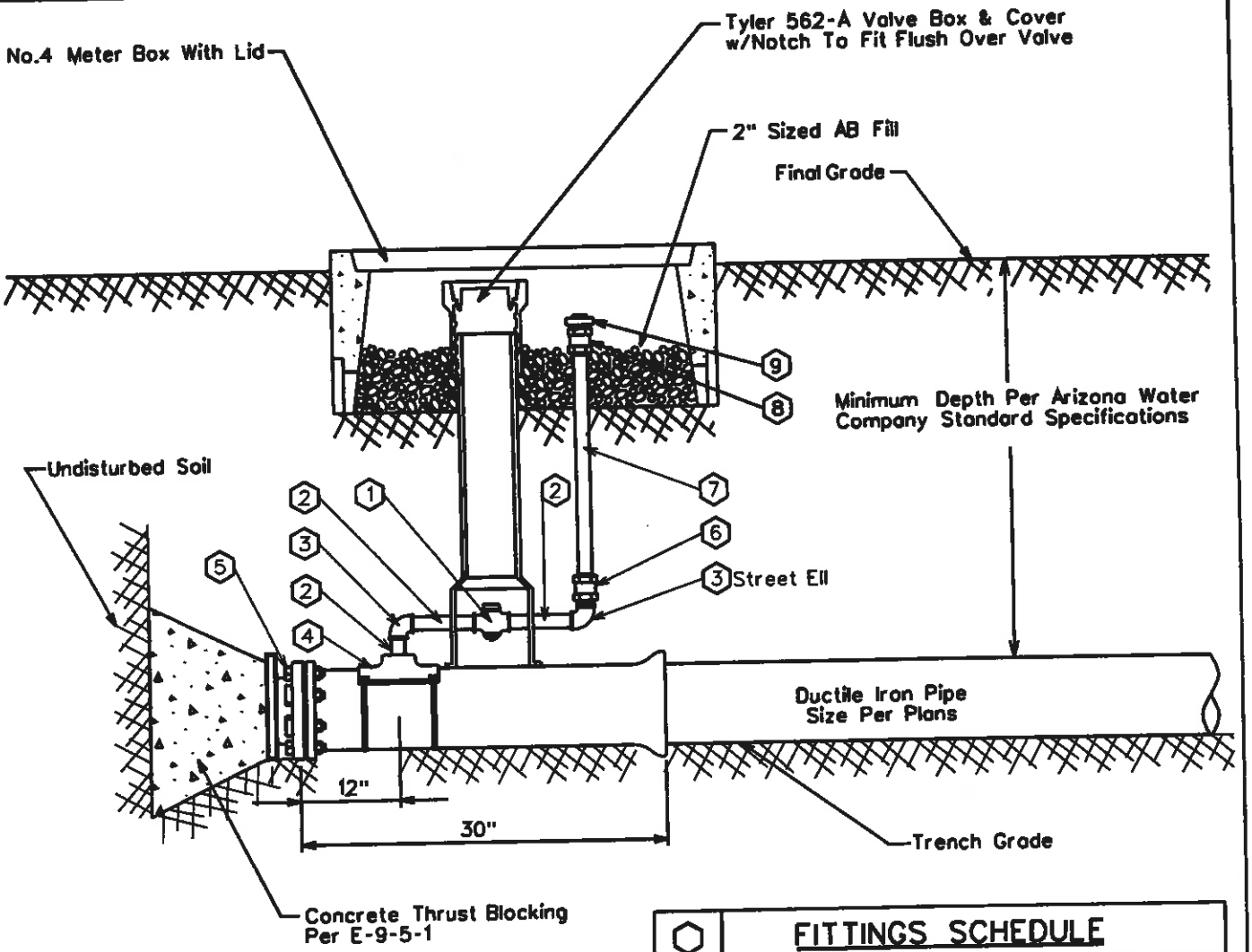

⬡	FITTINGS SCHEDULE
1.	2" Mueller 300 Ball Curb Valve B-20283 FIP x FIP W/ 2" Mueller Brass Square Wrench Nut Adapter B-20299
2.	2" Brass Nipple - Length To Fit Field Conditions
3.	2" Brass 90° Elbow, IPST
4.	Mueller Double Strap Bronze Service Saddle - BR2B
5.	M.J. Plug - Megalug Restraints May Be Required
6.	2" Straight Coupling CC x FIP H-15451
7.	2" Copper Pipe
8.	2" Straight Coupling CC x MIP H-15428
9.	2" Square Head Plug, MIP

ARIZONA WATER COMPANY

STANDARD SPECIFICATION
FOR THE INSTALLATION OF

2" BLOWOFF ASSEMBLY

DRAWN BY:	APPROVED BY:	DATE:	△	
CB	MW	03.20.1986	03.21.2006	E-9-8-1

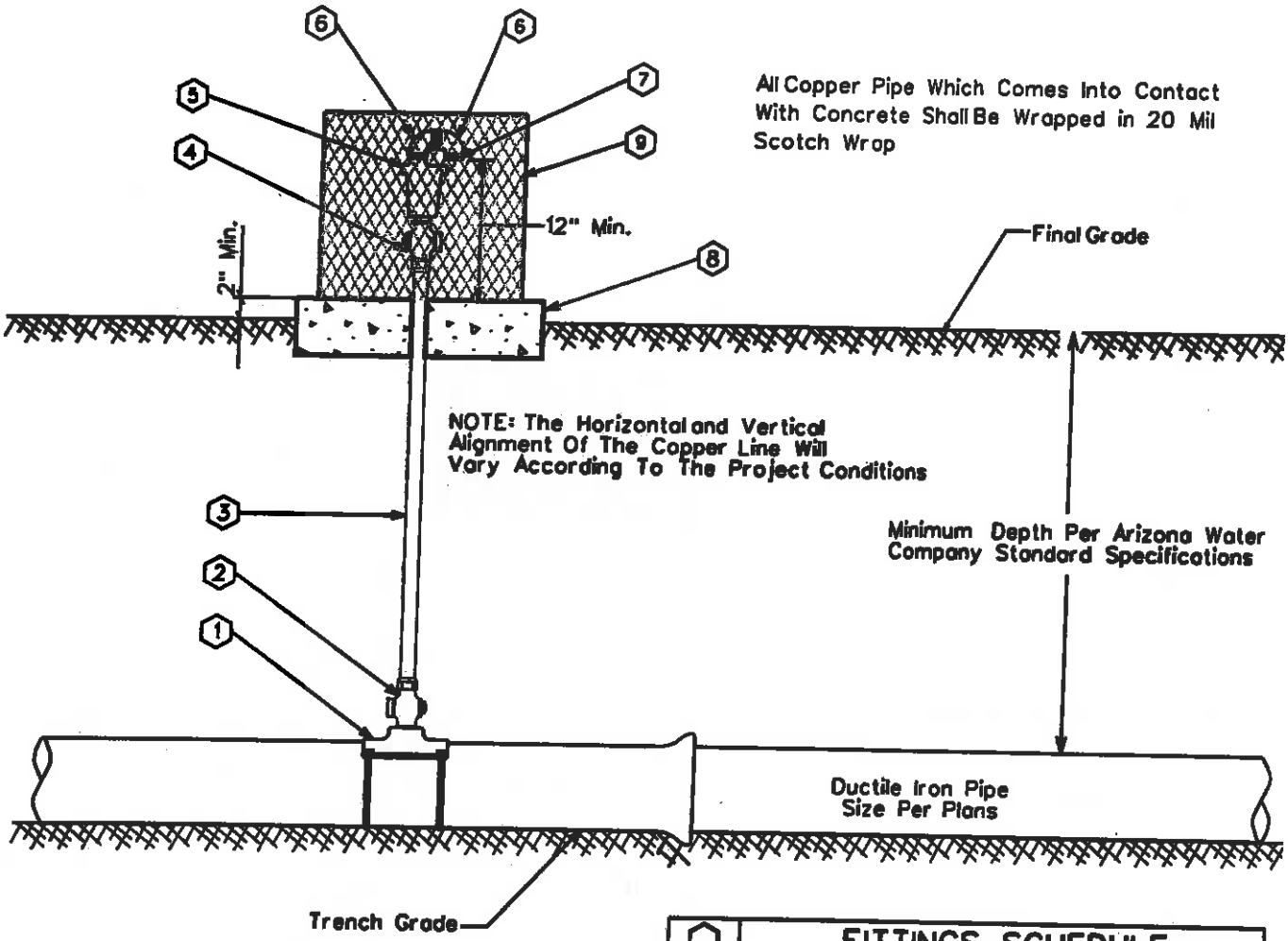

GENERAL NOTES:

1. The valve shall be installed at high points and on long runs to vent the accumulation of air with the line under pressure- see the construction plans for specific locations.
2. The valve shall have a 5/64" orifice with valve sealing faces of stainless steel and BUNA-N rubber.
3. The valve shall be Crispin model AR10 for 6" and larger water mains.
4. Crispin model AR10 valve construction consists of a 1" IPST inlet & 1/2" IPST outlet, cast iron body and top flange with stainless steel float and trim.
5. The air release assembly shall be located out of the path of traffic but within right-of-way or easement.

⬡	FITTINGS SCHEDULE
1.	Mueller BR2B Bronze Service Saddle - Double Strap
2.	1" Mueller B-25008 Taper x Comp. Ball Corp Stop
3.	1" Type 'K' Copper w/NO Splices - Field Fit
4.	1" Mueller B-25028 IP x Comp. Ball Corp Stop
5.	Crispin 1" Air Release Valve, Model AR10
6.	1/2" Brass Street Elbow
7.	No.16 Wire Mesh Screen (Non-Corrodible)
8.	4" Thick Concrete Pad - Class 'C' Concrete
9.	Guardshack, Model GS-1, Available From BPDI, Inc. Available In Leaf Green Or Desert Tan

ARIZONA WATER COMPANY

STANDARD SPECIFICATION
FOR THE INSTALLATION OF

TYPICAL AIR RELEASE VALVE

DRAWN BY:	APPROVED BY:	DATE:		
CB	MW	03.20.1997	△08.24.2006	E-9-8-2

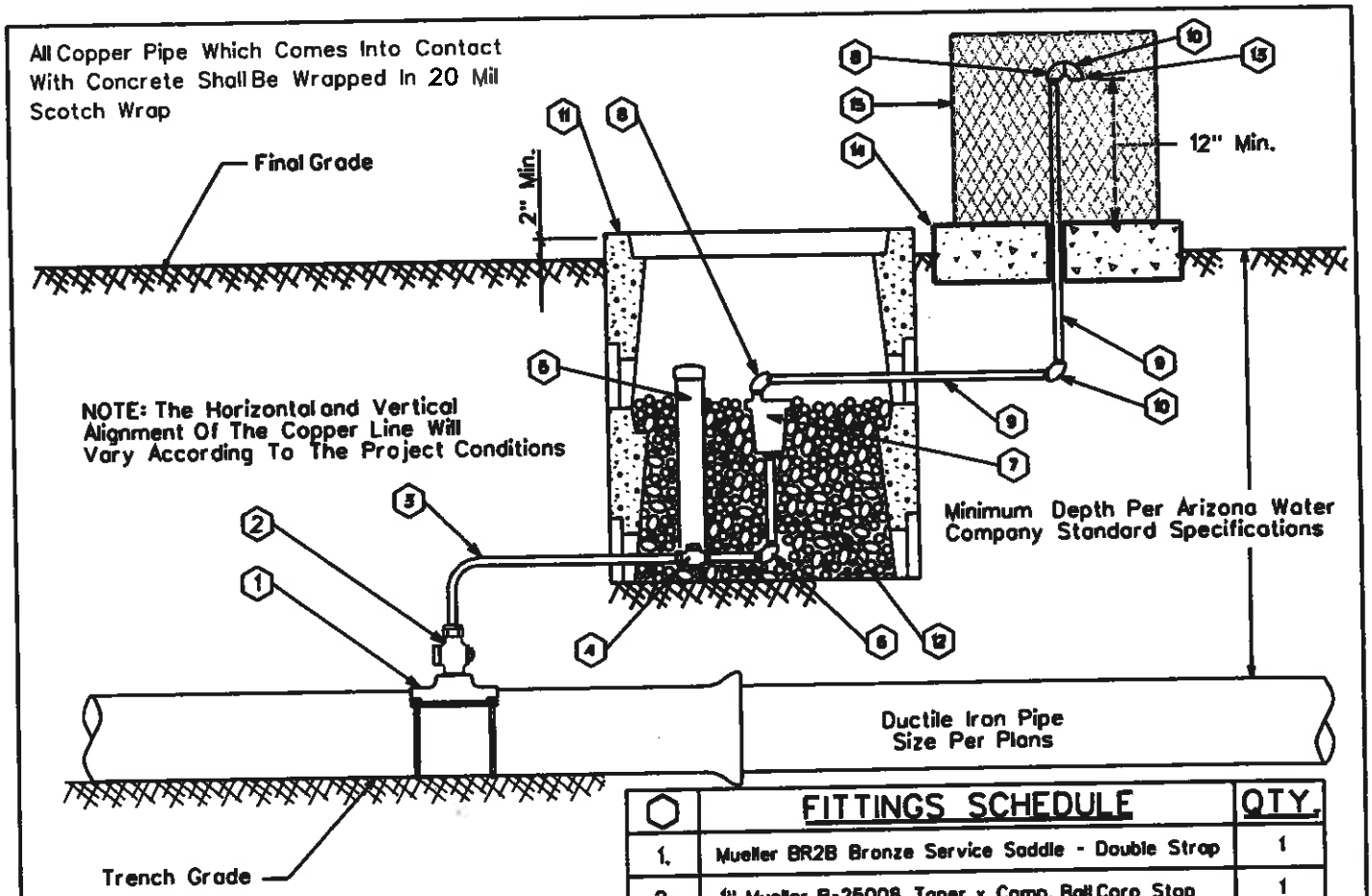

⬡	FITTINGS SCHEDULE	QTY.
1.	Mueller BR2B Bronze Service Saddle - Double Strap	1
2.	1" Mueller B-25008 Taper x Comp. Ball Corp Stop	1
3.	1" Type 'K' Copper w/NO Splices - Field Fit	As Req'd
4.	1" Mueller B-25028 IP x Comp. Ball Corp Stop	1
5.	3" PVC Pipe w/ Cap (Loose Fit)	1
6.	1" x 4" Brass Nipple w/90° Elbow	1
7.	Crispin 1" Air Release Valve, Model AR10	1
8.	½" Brass Street Elbow	2
9.	½" Galvanized Pipe - Length as req'd	2
10.	½" Galvanized 90° Ell	2
11.	Number 1 Meter Box	2
12.	2" Sized AB (Fill Meter Box To The Top Of The Air Release Valve)	As Req'd
13.	No.16 Wire Mesh Screen (Non-Corrodible)	1
14.	4" Thick Concrete Pad - Class 'C' Concrete	1
15.	Guardshack, Model GS-1, Available From BPDI, Inc. Available In Leaf Green Or Desert Tan	1

GENERAL NOTES:

1. The valve shall be installed at high points and on long runs to vent the accumulation of air with the line under pressure- see the construction plans for specific locations.
2. The valve shall have a 5/64" orifice with valve sealing faces of stainless steel and BUNA-N rubber.
3. The valve shall be Crispin model AR10 for 6" and larger water mains.
4. Crispin model AR10 valve construction consists of a 1" IPST inlet & ½" IPST outlet, cast iron body and top flange with stainless steel float and trim.
5. The air release assembly shall be located out of the path of traffic but within the right-of-way or easement.

ARIZONA WATER COMPANY

STANDARD SPECIFICATION
FOR THE INSTALLATION OF

AIR RELEASE VALVE FOR THE NORTHERN REGION

DRAWN BY:	APPROVED BY:	DATE:		
CB	MW	03.20.1997	△08.24.2006	E-9-8-3

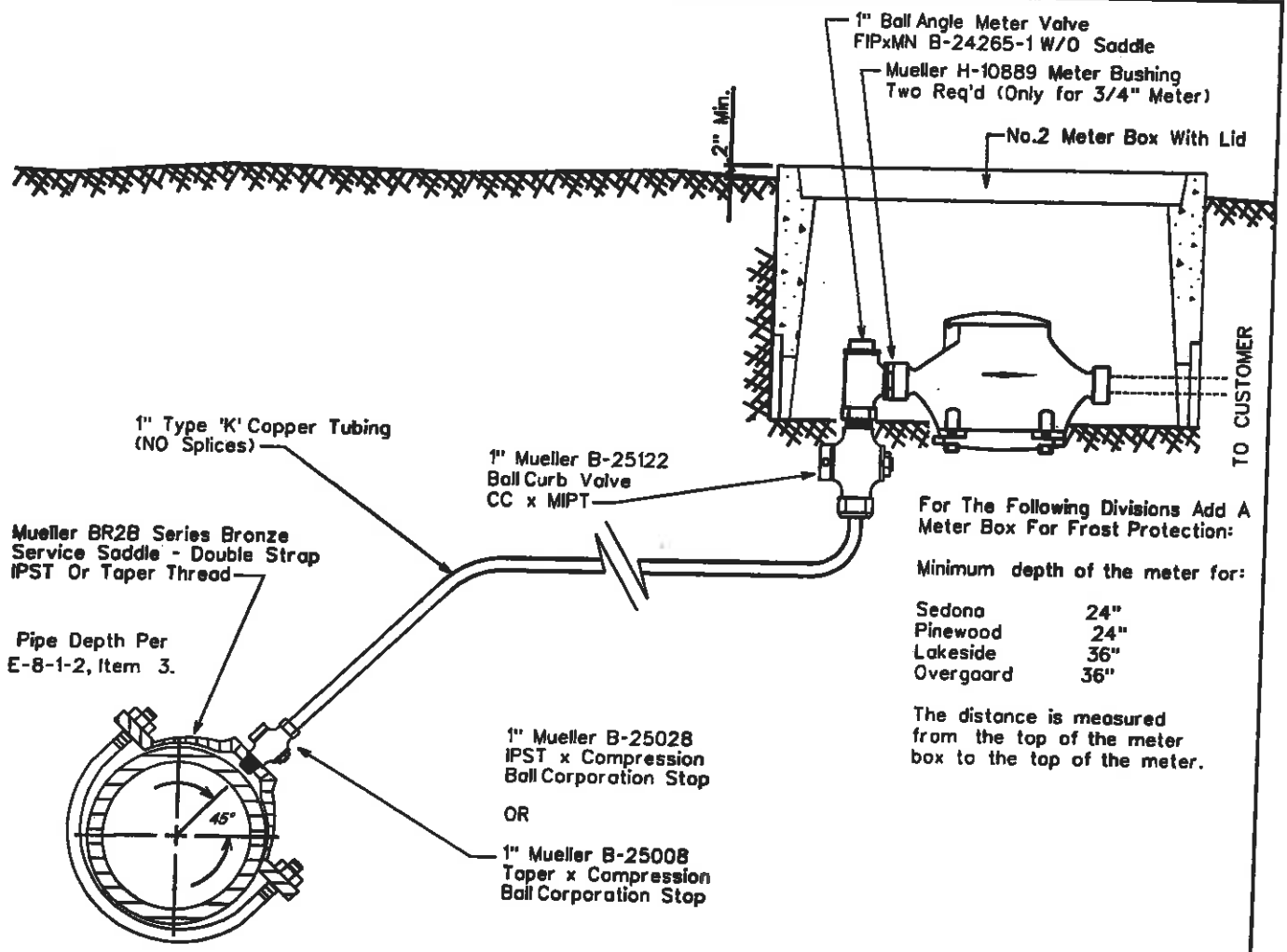

For The Following Divisions Add A Meter Box For Frost Protection:

Minimum depth of the meter for:

Sedona	24"
Pinewood	24"
Lakeside	36"
Overgaard	36"

The distance is measured from the top of the meter box to the top of the meter.

SADDLE TAP TO CA, PVC, OR DI PIPE

NOTE: The minimum distance between taps on mains other than ductile iron is 12"

NOTE:
Only the meter is supplied by Arizona Water Company

ARIZONA WATER COMPANY

STANDARD SPECIFICATION
FOR THE INSTALLATION OF

SINGLE SERVICE CONNECTION FOR A 3/4" OR 1" METER

DRAWN BY:	APPROVED BY:	DATE:		
CCO	M.W.	3/20/86	△ 03.17.2006	E-9-9-1

For The Following Divisions Add A Meter Box For Frost Protection:

Minimum depth of the meter for:

Sedona	24"
Pinewood	24"
Lakeside	36"
Overgaard	36"

The distance is measured from the top of the meter box to the top of the meter.

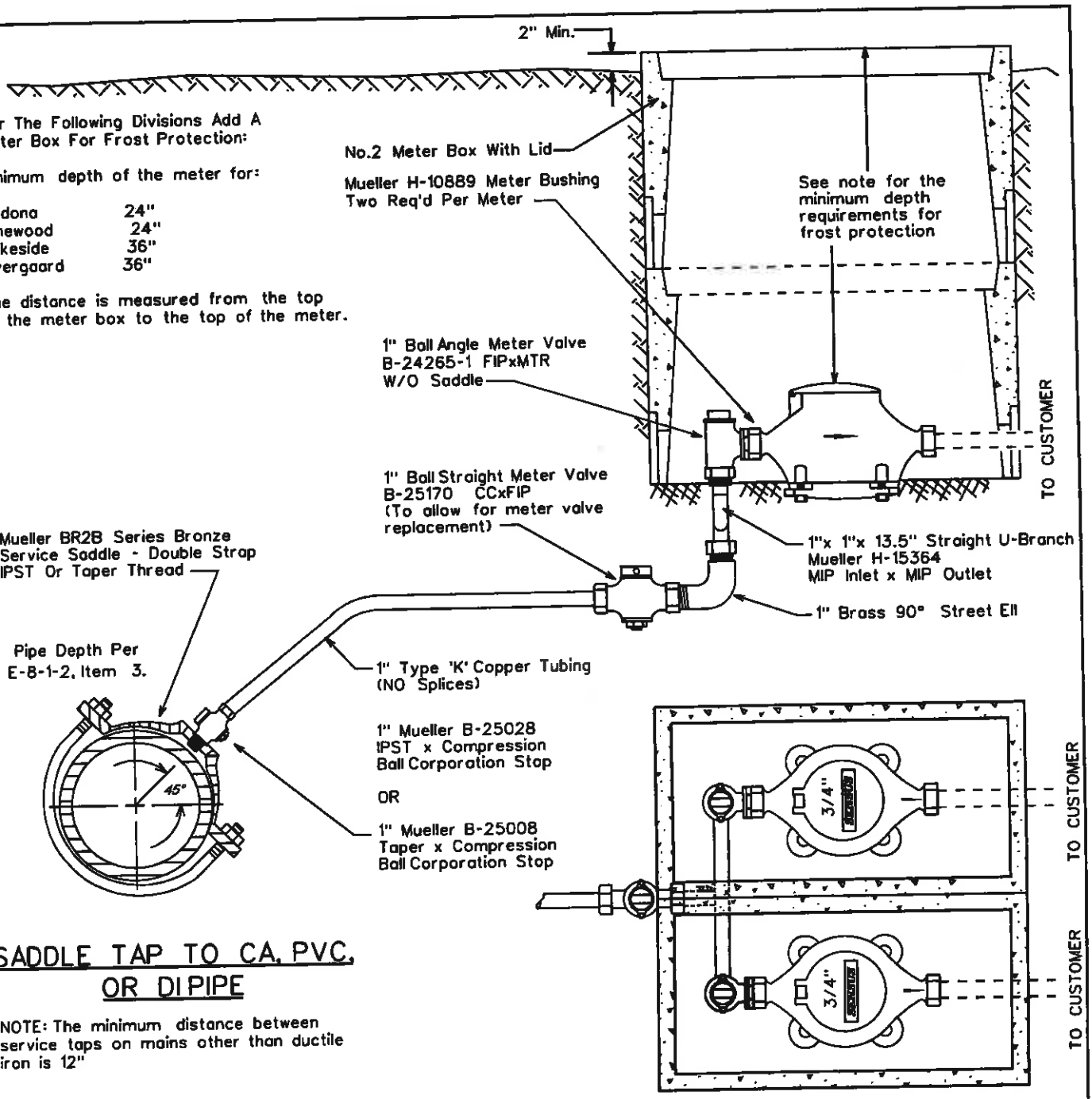

SADDLE TAP TO CA, PVC, OR DI PIPE

NOTE: The minimum distance between service taps on mains other than ductile iron is 12"

NOTE:
Only the meter is supplied by Arizona Water Company

ARIZONA WATER COMPANY

STANDARD SPECIFICATION
FOR THE INSTALLATION OF

DOUBLE SERVICE CONNECTION FOR 3/4" METERS

DRAWN BY:	APPROVED BY:	DATE:	△ 08.25.2006	E-9-10-1
CCO	M.W.	3-20-86		

For The Following Divisions Add A Meter Box For Frost Protection:

Minimum depth of the meter for:

Sedona	24"
Pinewood	24"
Lakeside	36"
Overgaard	36"

The distance is measured from the top of the meter box to the top of the meter.

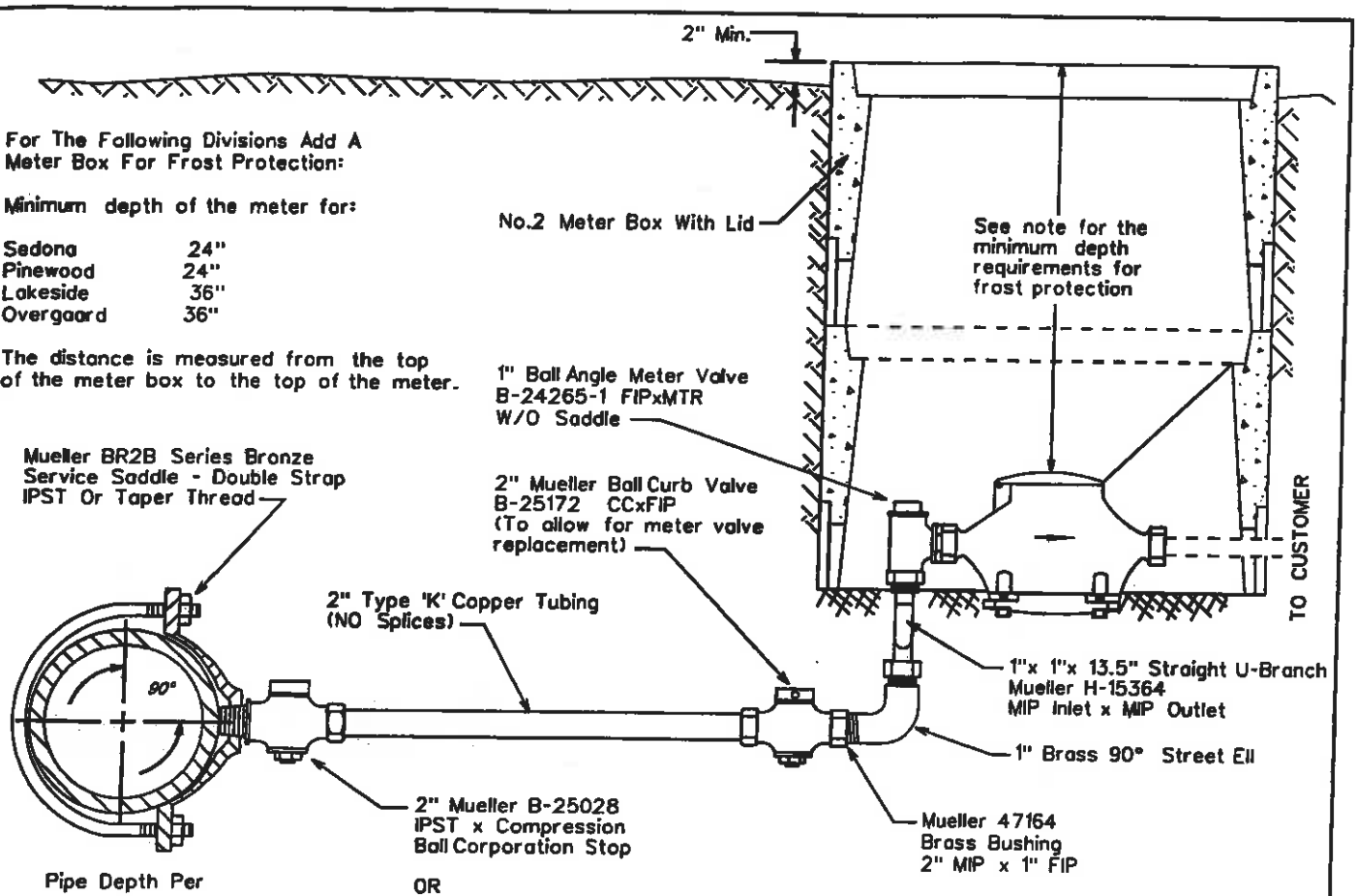

Pipe Depth Per E-8-1-2, Item 3.

SADDLE TAP TO CA, PVC, OR DI PIPE

NOTE: The minimum distance between service taps on mains other than ductile iron is 12"

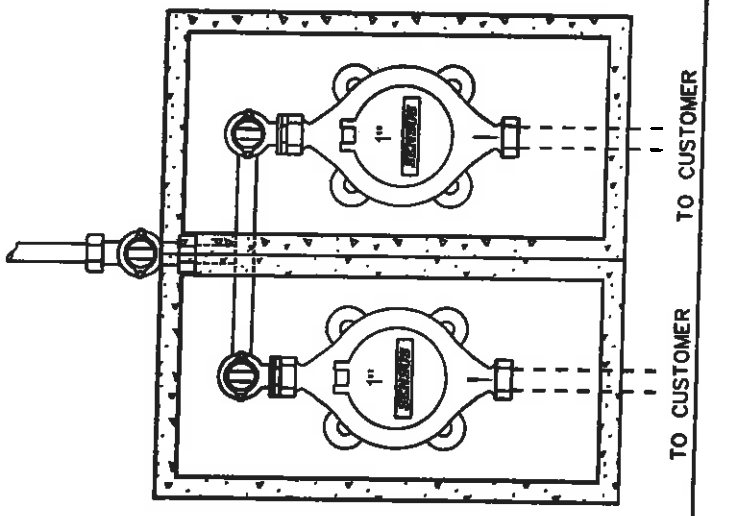

NOTE: THE LENGTH OF SERVICE IS LIMITED TO COMMERICIALLY AVAILABLE ROLLS, TYPICALLY 60 FEET

NOTE:
Only the meter is supplied by Arizona Water Company

ARIZONA WATER COMPANY

STANDARD SPECIFICATION
FOR THE INSTALLATION OF

DOUBLE SERVICE CONNECTION FOR 1" METERS

DRAWN BY:	APPROVED BY:	DATE:		
CB	M.W.	03.17.2006	△ 08.29.2006	E-9-10-2

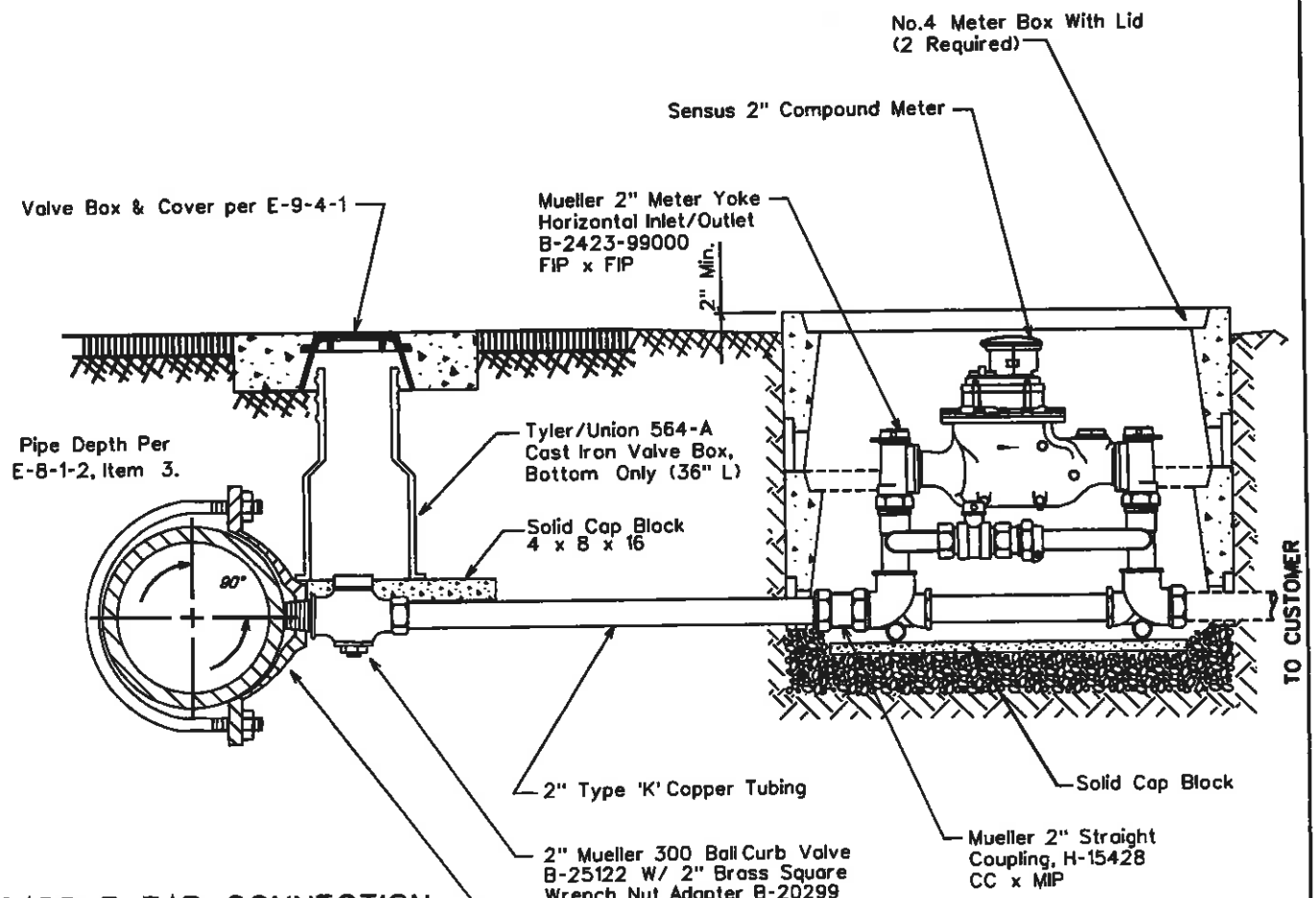

SADDLE TAP CONNECTION TO DUCTILE IRON PIPE

NOTE: The minimum distance between service taps on mains other than ductile iron is 12"

NOTE: THE LENGTH OF SERVICE IS LIMITED TO COMMERICIALLY AVAILABLE ROLLS, TYPICALLY 60 FEET

NOTE:

Only the meter is supplied by Arizona Water Company

ARIZONA WATER COMPANY

STANDARD SPECIFICATION
FOR THE INSTALLATION OF

TYPICAL 2" SERVICE CONNECTIONS

DRAWN BY:	APPROVED BY:	DATE:		
JW	M.W.	3/20/86	△ 08.29.2006	E-9-11-1

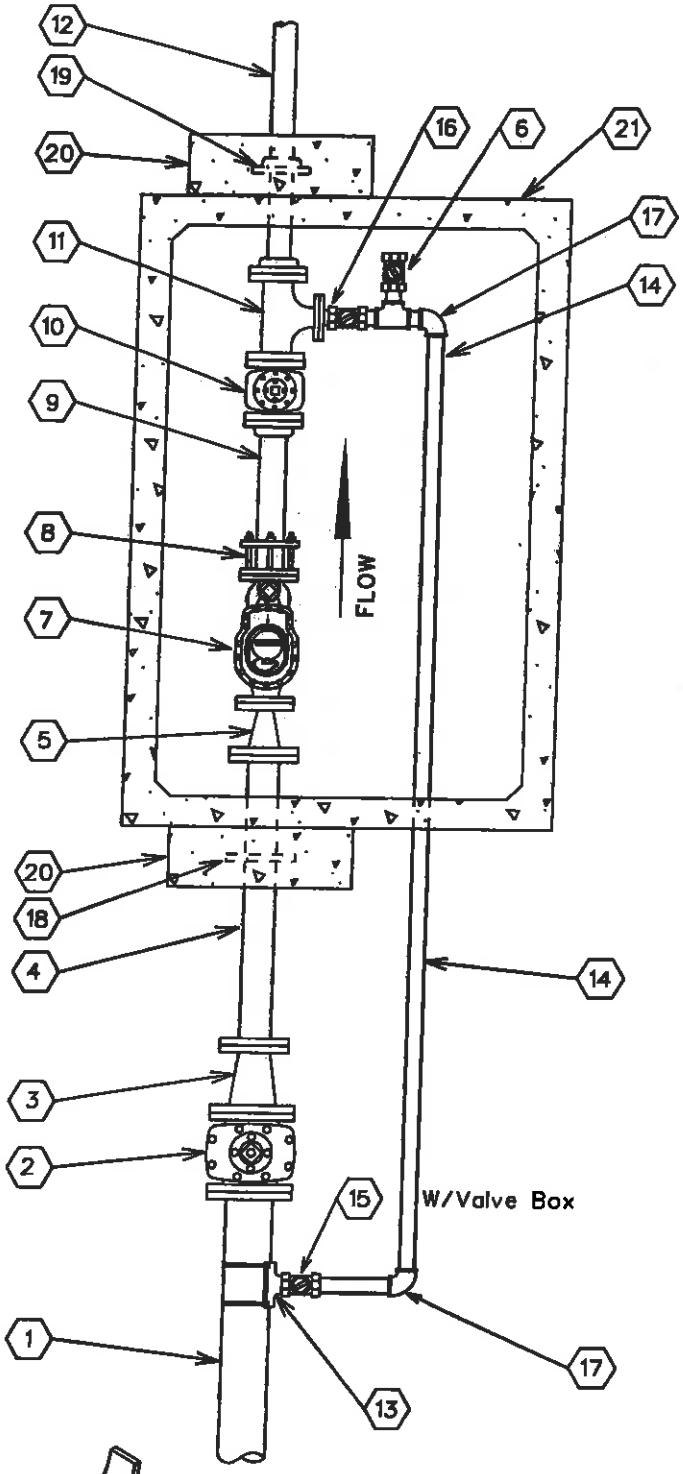

No.	FITTINGS SCHEDULE
1.	6" D.I.P.
2.	6" G.V.B.&C. mj x flng
3.	6"x4" Reducer flng x mj
4.	4"x3'-0" D.I.P. Spool flng x pe
5.	4" x 3" Reducer flng
6.	2" Test Port
7.	3" Compound Meter
8.	3" F.C.A.
9.	3"x2'-0" D.I. Spool flng x pe
10.	3" Gate Valve flng
11.	3"x2" Flg Tee w/ 2" Companion Flange
12.	3"x4'-0" D.I. Spool flng x pe
13.	6"x2" Tapping Saddle
14.	2" Copper Pipe
15.	2" Mueller B25122 Ball Valve w/B20299 Nut
16.	2" Locking Ball Valve (normally closed)
17.	2" Mueller H-15526 90° Ell CC x CC
18.	4" Megalug
19.	3" Slip-On Welding Flange
20.	24"x24"x8" Conc. Thrust Block P.I.P.
21.	575-LA Conc. Vault

NOTE:

1. Use Rowley pipe supports or equivalent as needed (See detail below).
2. Pipe support locations to be determined by field personnel.
3. All copper pipe that comes in contact with concrete to be wrapped w/10-20 Mil. Scotchwrap corrosion protection tape.
4. All mechanical joint fittings are to be megalugged.
5. Use deflection fittings (45° Ells.) to achieve necessary depths & cover as shown on the standard specification for the installation of a concrete vault (E-9-12-5).

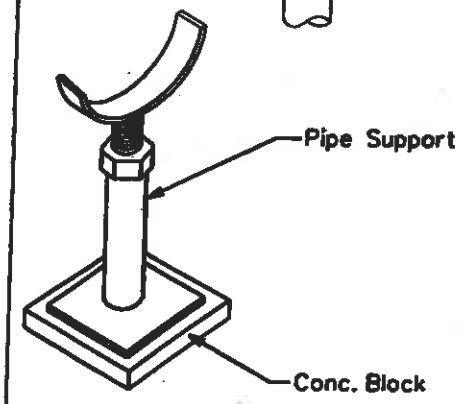

ARIZONA WATER COMPANY

STANDARD SPECIFICATION
FOR THE INSTALLATION OF

3" COMPOUND METER

DRAWN BY:	APPROVED BY:	DATE:		
CCO	MW	10/5/1993	△08.29.2006	E-9-12-1

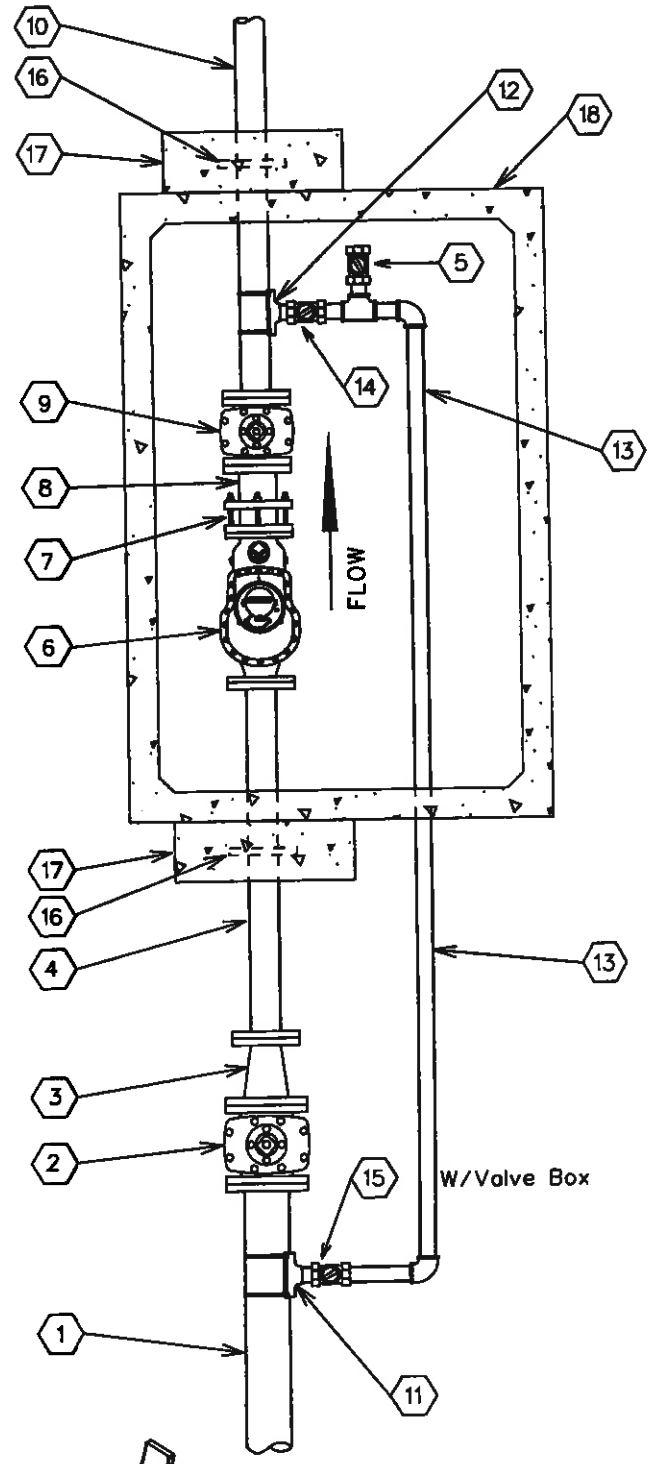

No.	FITTINGS SCHEDULE
1.	6" D.I.P.
2.	6" G.V.B.&C. mj x flng
3.	6"x4" Reducer flng x mj
4.	4"x3'-0" D.I.P. Spool flng x pe
5.	2" Test Port
6.	4" Compound Meter
7.	4" F.C.A.
8.	4"x1'-0" D.I.P. Spool flng x pe
9.	4" Gate Valve flng
10.	4"x4'-0" D.I.P. Spool flng x pe
11.	6"x2" Tapping Saddle
12.	4"x2" Tapping Saddle
13.	2" Copper Pipe
14.	2" Ball Valve / Locking (Normally Closed)
15.	2" Mueller B25122 Ball Valve w/B20299 Nut
16.	4" Megalug
17.	24"x24"x8" Conc. Thrust Block P.I.P.
18.	575-LA Conc. Vault

NOTE:

1. Use Rowley pipe supports or equivalent as needed (See detail below).
2. Pipe support locations to be determined by field personnel.
3. All copper pipe that comes in contact with concrete to be wrapped w/10-20 Mil. Scotchwrap corrosion protection tape.
4. All mechanical joint fittings are to be megalugged.
5. Use deflection fittings (45° Ells.) to achieve necessary depths & cover as shown on the standard specification for the installation of a concrete vault (E-9-12-5).

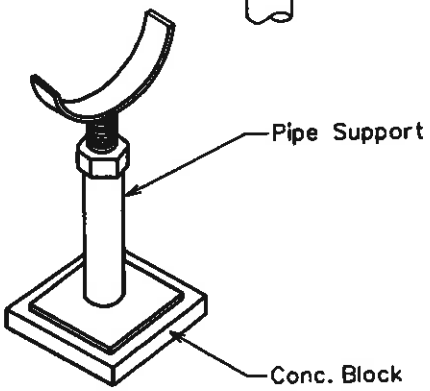

ARIZONA WATER COMPANY

STANDARD SPECIFICATION
FOR THE INSTALLATION OF

4" COMPOUND METER

DRAWN BY:	APPROVED BY:	DATE:		
CCO	MW	10/5/1993	△08.29.2006	E-9-12-2

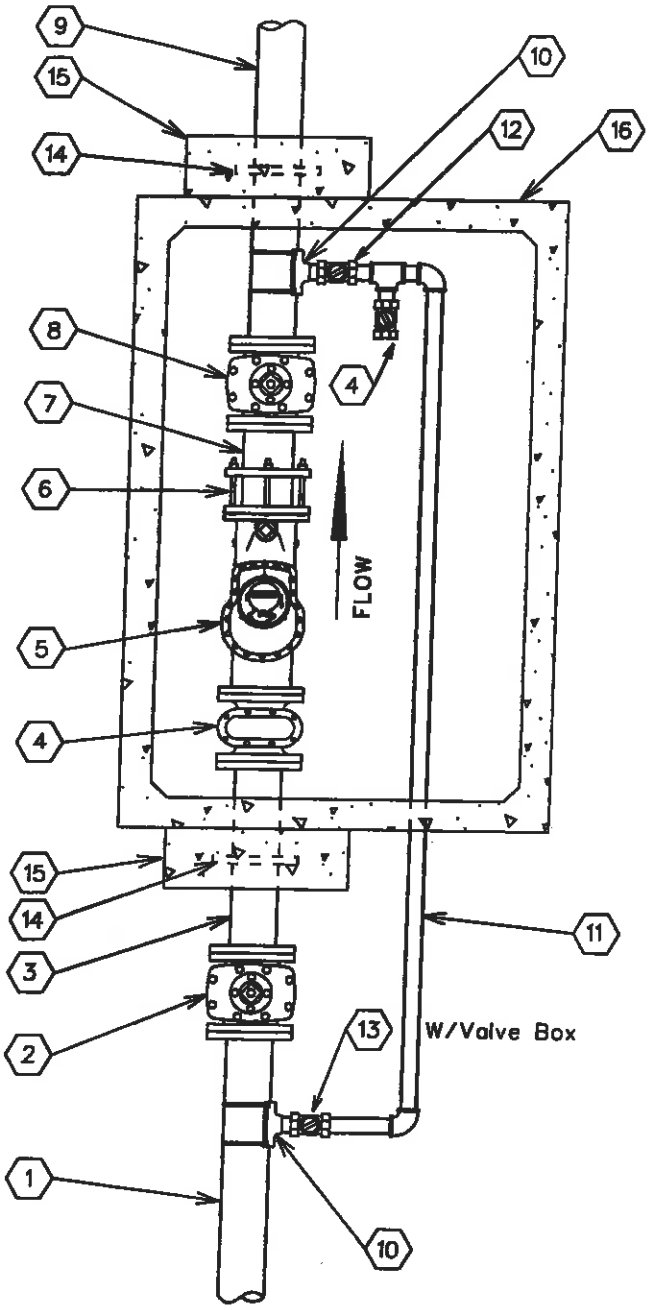

No.	FITTINGS SCHEDULE
1.	6" D.I.P.
2.	6" G.V.B.&C. mj
3.	6"x 3'-0" D.I.P. Spool flng x pe
4.	2" Test Port
5.	6" Compound Meter
6.	6" F.C.A.
7.	6"x 1'-0" D.I.P. Spool flng x pe
8.	6" Gate Valve flng
9.	6"x 4'-0" D.I.P. Spool flng x pe
10.	6"x2" Tapping Saddle
11.	2" Copper Pipe
12.	2" Ball Valve / Locking (Normally Closed)
13.	2" Mueller B25122 Ball Valve w/B20299 Nut
14.	6" Megalug
15.	24"x24"x8" Conc. Thrust Block P.I.P.
16.	575-LA Conc. Vault

NOTE:

1. Use Rowley pipe supports or equivalent as needed (See detail below).
2. Pipe support locations to be determined by field personnel.
3. All copper pipe that comes in contact with concrete to be wrapped w/10-20 Mil. Scotchwrap corrosion protection tape.
4. All mechanical joint fittings are to be megalugged.
5. Use deflection fittings (45° Ells.) to achieve necessary depths & cover as shown on the standard specification for the installation of a concrete vault (E-9-12-5).

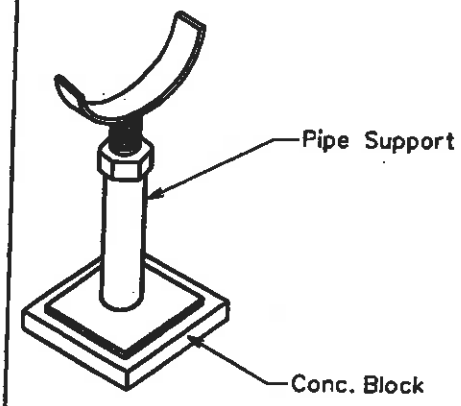

ARIZONA WATER COMPANY

STANDARD SPECIFICATION
FOR THE INSTALLATION OF

6" COMPOUND METER

DRAWN BY:	APPROVED BY:	DATE:		
CCO	MW	10/5/1993	△08.29.2006	E-9-12-3

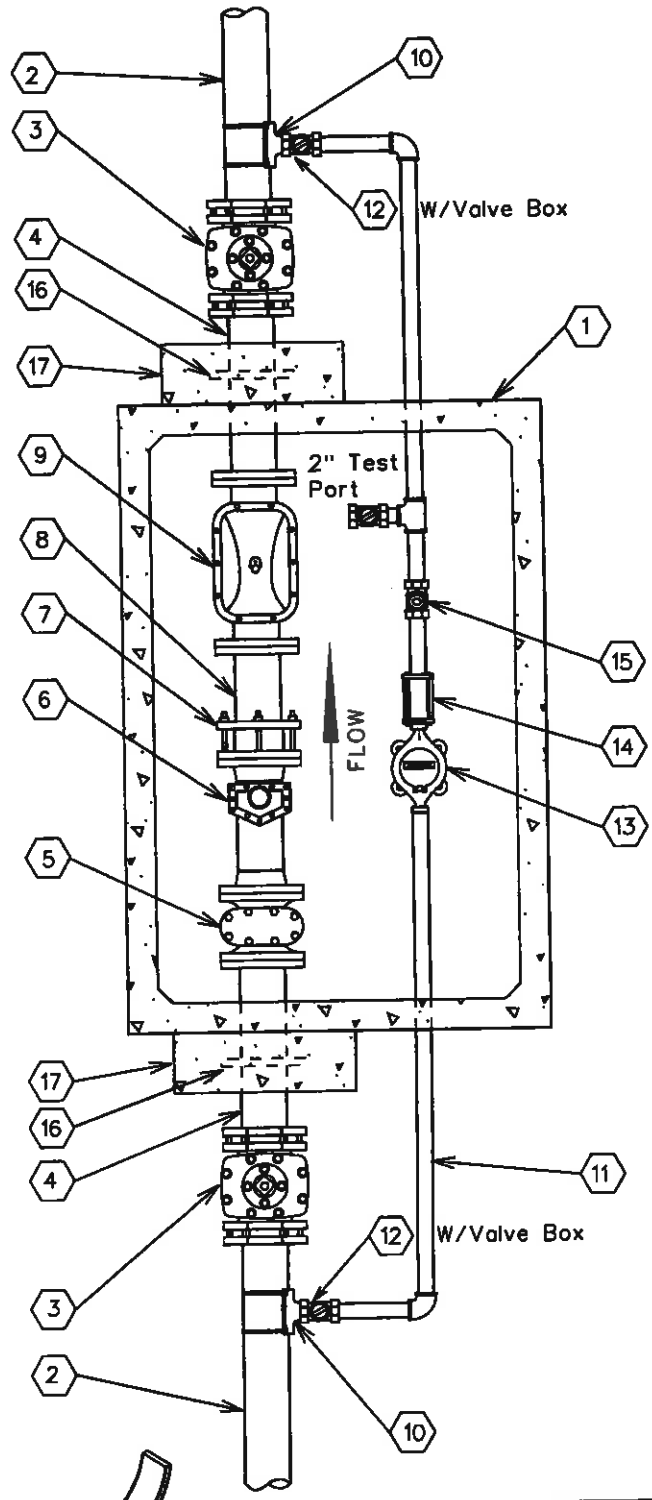

No.	FITTINGS SCHEDULE
1.	575-LA Conc. Vault
2.	6" D.I.P.
3.	6" G.V.B.&C. m.j.
4.	6" x 3'-0" D.I.P. SPool Piece flng x pe
5.	6" Strainer
6.	6" Turbo Meter
7.	6" F.C.A.
8.	6" x 2'-0" D.I.P. Spool Piece flng x pe (TRIM SPOOL PIECE TO 3x THE PIPE DIA.)
9.	6" Detector Check
10.	6"x*N" Tapping Saddle
11.	*N" Copper Pipe
12.	*N" Ball Valve (Locking)
13.	*N" Meter
14.	*N" Coup. Adapt.
15.	*N" Flapper Check Valve
16.	6" Megalug
17.	24"x24"x8" Conc. Thrust Block P.I.P.

*N - Size To Be determined By A.W.Co.

NOTE:

1. Use Rowley pipe supports or equivalent as needed (See detail below).
2. Pipe support locations to be determined by field personnel.
3. All copper pipe that comes in contact with concrete to be wrapped w/10-20 Mil. Scotchwrap corrosion protection tape.
4. All mechanical joint fittings are to be megalugged.
5. Use deflection fittings (45° Ells.) to achieve necessary depths & cover as shown on the standard specification for the installation of a concrete vault (E-9-12-5).
6. To change from a 6" service to a 4" service, change all listed 6" materials to 4" materials.

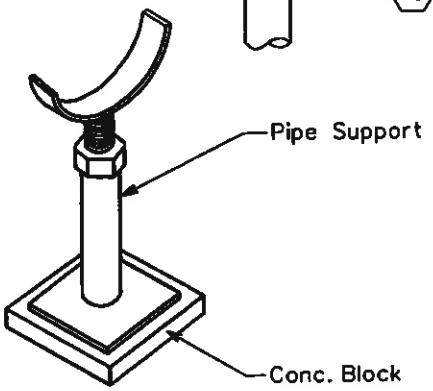

ARIZONA WATER COMPANY

STANDARD SPECIFICATION
FOR THE INSTALLATION OF

6" COMPOUND SERVICE

DRAWN BY:	APPROVED BY:	DATE:		
CCO	MW	10/05/1993	△08.29.2006	E-9-12-4

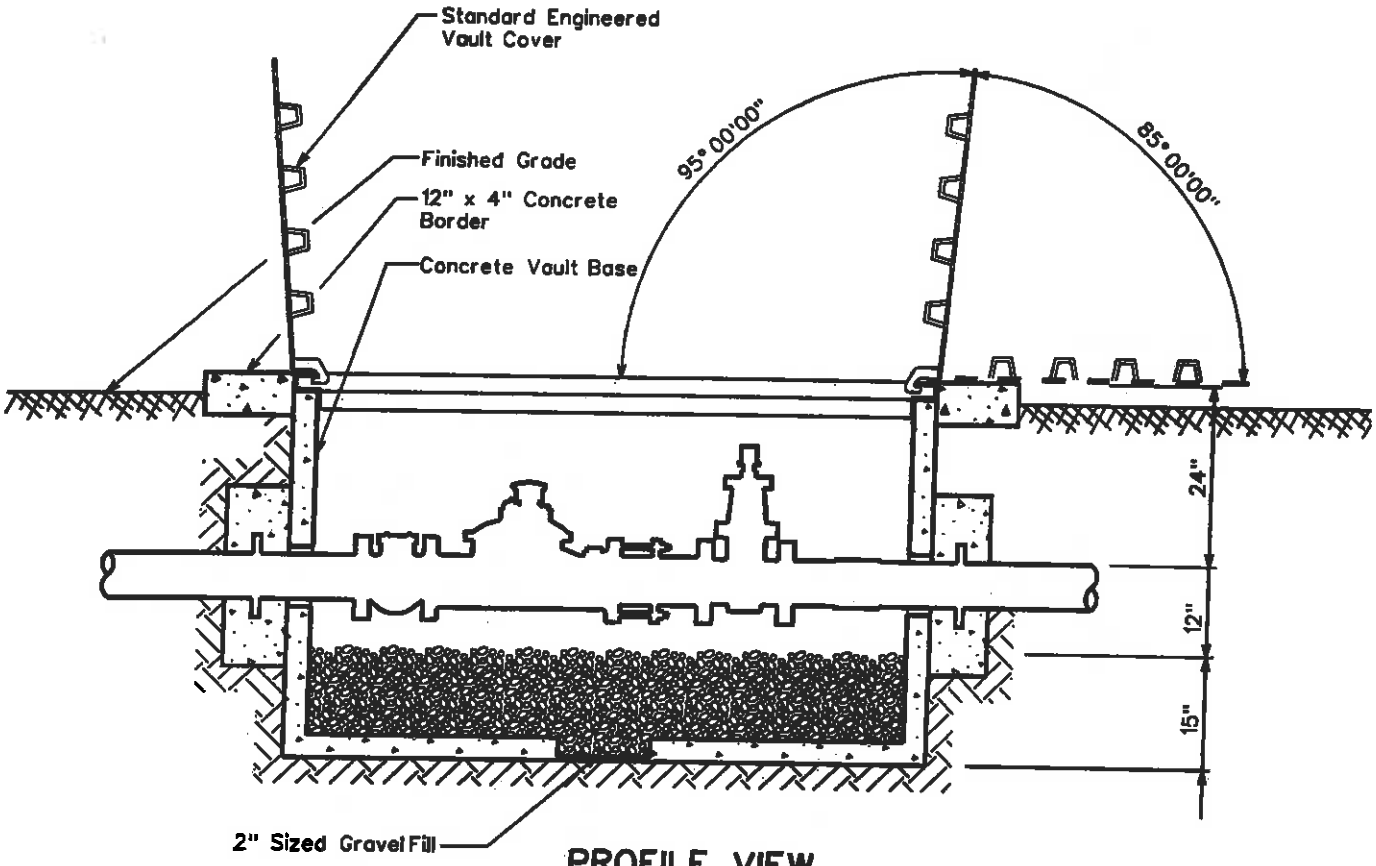

PROFILE VIEW

CONCRETE VAULT & COVER SPECIFICATIONS

Vault - Base No. 575-BL
Cover - Standard Engineered Vault Cover
- 4874 Aluminum Diamond Plate Cover For Non-Traffic Loading Areas
  Or
- 4874 Galvanized Steel Diamond Plate Cover W/ H-20 Traffic Loading
- Double Torsion Spring Assisted Doors W/ Recessed Hasp & Safety Latches

NOTES

1. Total Depth Of Concrete Vault To Be A Maximum Of 3'-0" From Top Of Vault Cover To Top Of Gravel Fill.
2. Service Connections Larger Than 6" In Diameter Will Conform To The Same Vault & Cover Specifications. Size Of Vault & Cover To Be Determined By A.W.Co. Engineers.

ARIZONA WATER COMPANY

STANDARD SPECIFICATION
FOR THE INSTALLATION OF

CONCRETE VAULT

DRAWN BY:	APPROVED BY:	DATE:		
CCO	MW	10/5/1993	△ 05.17.2001	E-9-12-5

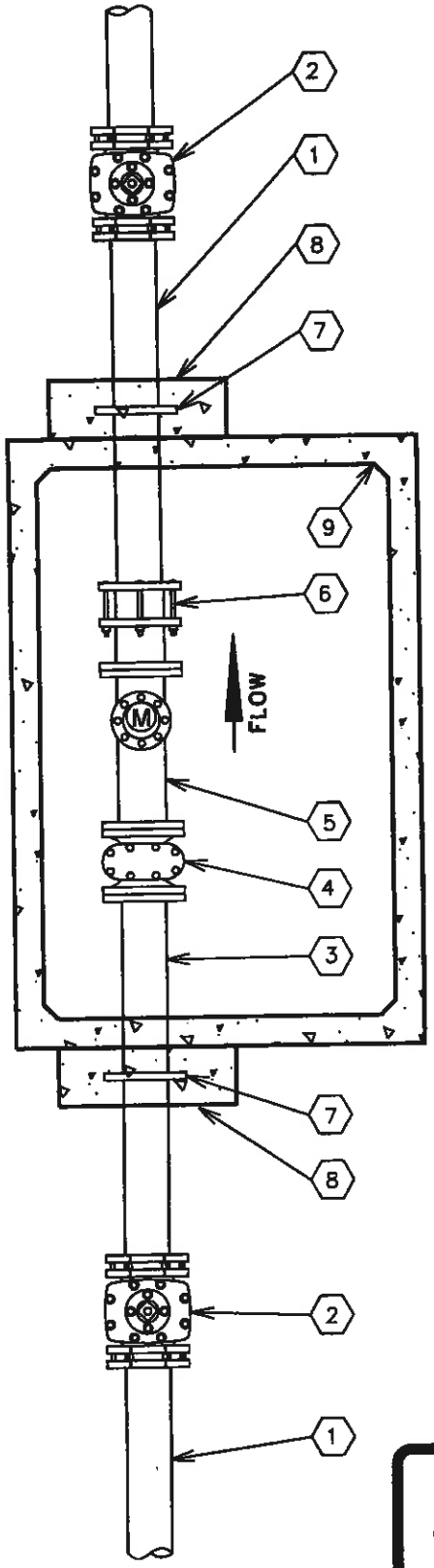

No.	FITTINGS SCHEDULE
1.	Ductile Iron Pipe
2.	Gate Valve M.J.
3.	D.I.P. Spool Piece Flg x Pe (10xDia.)
4.	Meter Strainer
5.	Propeller Meter
6.	Flanged Coupling Adapter
7.	Megalug Gland (Thrust Anchor)
8.	Concrete Thrust Block P.I.P.
9.	Concrete Vault

NOTE:

1. Use Rowley pipe supports or equivalent as needed (See E-9-12-4).
2. Pipe support locations to be determined by field personnel.
3. All Sched. 40 Stl. pipe outside of vault to be wrapped w/10-20 Mil. Scotchwrap corrosion protection tape.
4. All mechanical joint fittings to are to be megalugged.
5. Use deflection fittings (45° Ells.) to achieve necessary depths & cover as shown on the standard specification for the installation of a concrete vault (E-9-12-5).

ARIZONA WATER COMPANY

STANDARD SPECIFICATION
FOR THE INSTALLATION OF

NON-POTABLE PROPELLER METER

DRAWN BY:	APPROVED BY:	DATE:		
JPK	MW	7-20-95	△	E-9-12-6

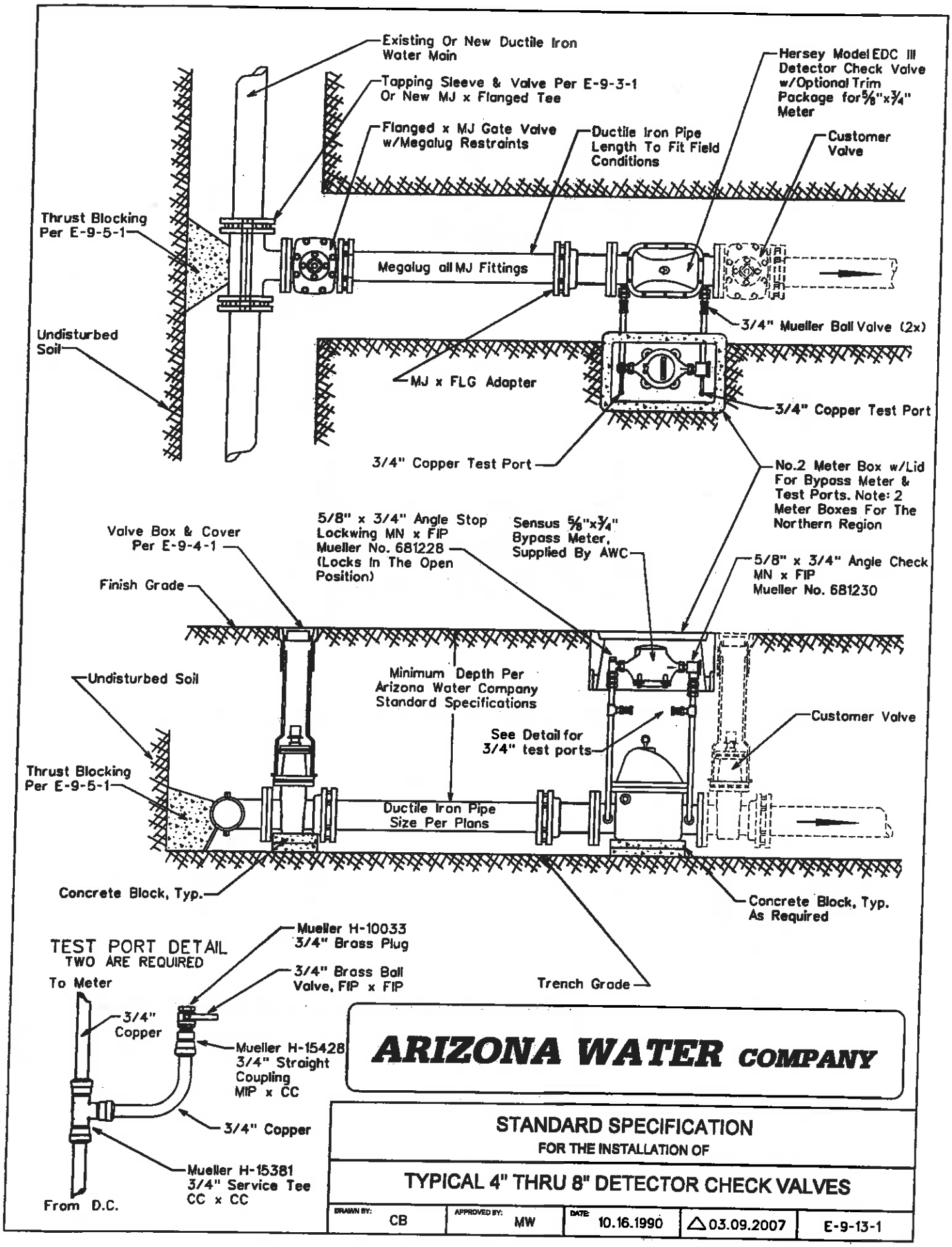
Existing Or New Ductile Iron Water Main
Tapping Sleeve & Valve Per E-9-3-1 Or New MJ x Flanged Tee
Flanged x MJ Gate Valve w/Megalug Restraints
Ductile Iron Pipe Length To Fit Field Conditions
Hersey Model EDC III Detector Check Valve w/Optional Trim Package for 5/8"x3/4" Meter
Customer Valve
Thrust Blocking Per E-9-5-1
Megalug all MJ Fittings
3/4" Mueller Ball Valve (2x)
Undisturbed Soil
MJ x FLG Adapter
3/4" Copper Test Port
3/4" Copper Test Port
No.2 Meter Box w/Lid For Bypass Meter & Test Ports. Note: 2 Meter Boxes For The Northern Region
Valve Box & Cover Per E-9-4-1
5/8" x 3/4" Angle Stop Lockwing MN x FIP Mueller No. 681228 (Locks In The Open Position)
Sensus 5/8"x3/4" Bypass Meter, Supplied By AWC
5/8" x 3/4" Angle Check MN x FIP Mueller No. 681230
Finish Grade
Undisturbed Soil
Minimum Depth Per Arizona Water Company Standard Specifications
See Detail for 3/4" test ports
Customer Valve
Thrust Blocking Per E-9-5-1
Ductile Iron Pipe Size Per Plans
Concrete Block, Typ.
Concrete Block, Typ. As Required
Trench Grade
TEST PORT DETAIL
TWO ARE REQUIRED
To Meter
Mueller H-10033 3/4" Brass Plug
3/4" Brass Ball Valve, FIP x FIP
3/4" Copper
Mueller H-15428 3/4" Straight Coupling MIP x CC
3/4" Copper
Mueller H-15381 3/4" Service Tee CC x CC
From D.C.
ARIZONA WATER COMPANY
STANDARD SPECIFICATION
FOR THE INSTALLATION OF
TYPICAL 4" THRU 8" DETECTOR CHECK VALVES
DRAWN BY: CB
APPROVED BY: MW
DATE: 10.16.1990
△03.09.2007
E-9-13-1

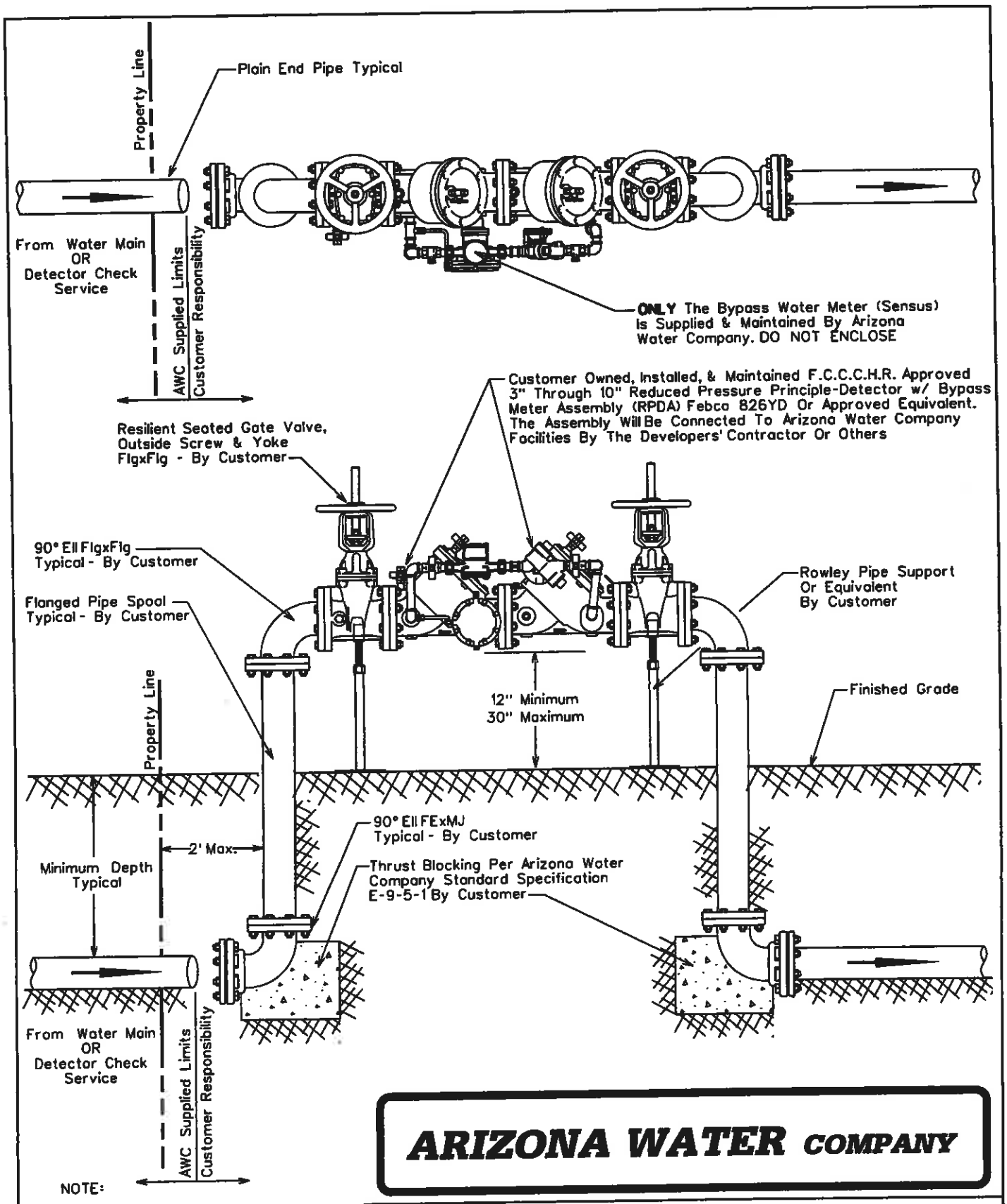

NOTE:

Minimum Depth Of Cover Over 6" & 8" Mains is 36 Inches, 12" & Greater is 48 Inches Unless Otherwise Specified

ARIZONA WATER COMPANY

STANDARD SPECIFICATION

FOR THE INSTALLATION OF

3" THRU 10" REDUCED PRESSURE PRINCIPLE-DETECTOR WITH BYPASS METER ASSEMBLY (RPDA) FOR FIRELINE SERVICES

DRAWN BY:	APPROVED BY:	DATE:		
CB	MW	10-13-98	△1-19-2000	E-9-13-2

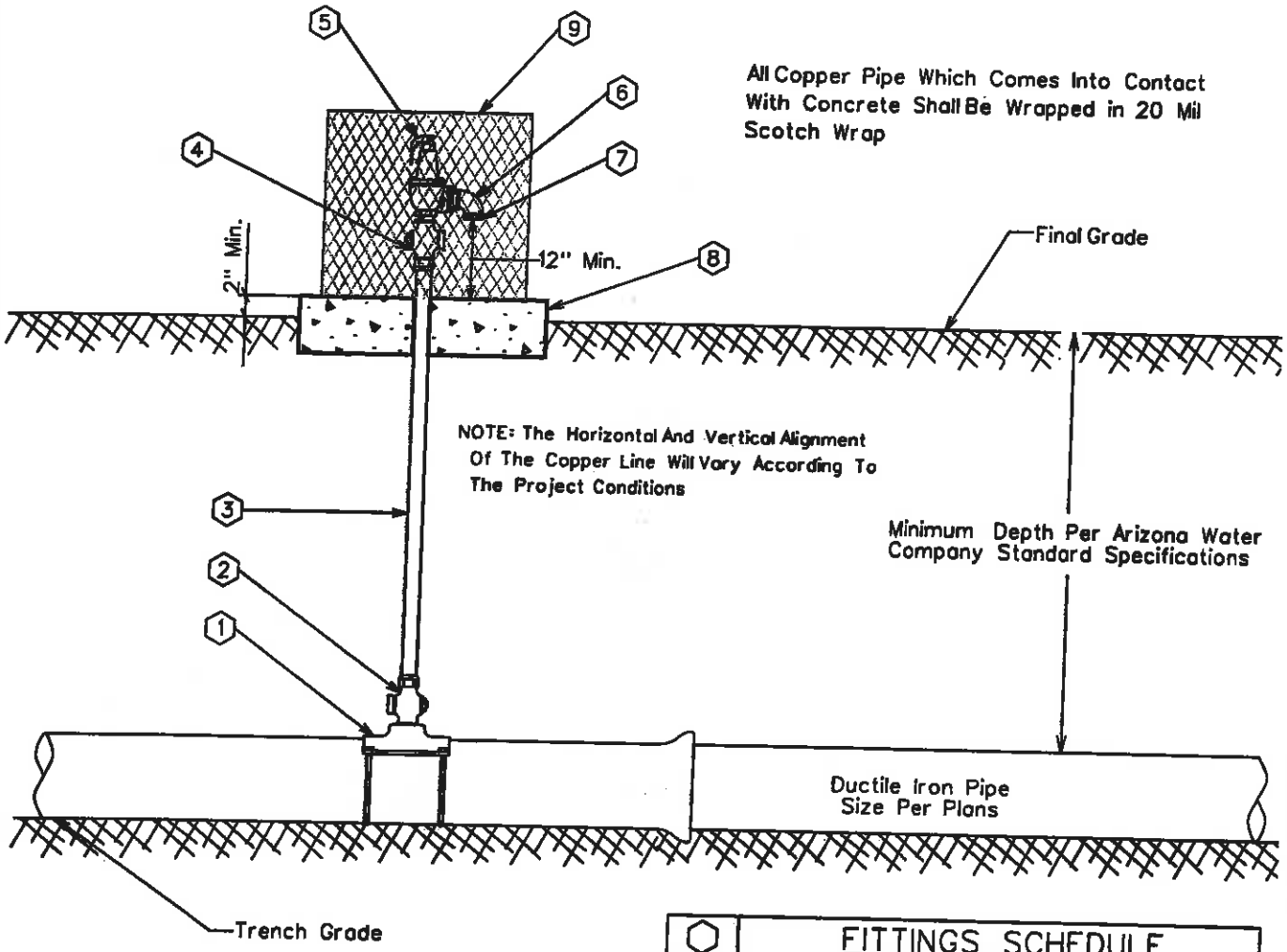

⬡	FITTINGS SCHEDULE
1.	Mueller BR2B Bronze Service Saddle - Double Strap
2.	2" Mueller B-25008 Taper x Comp. Ball Corp Stop
3.	2" Type 'K' Copper w/NO Splices - Field Fit
4.	2" Mueller B-25028 IP x Comp. Ball Corp Stop
5.	2" Pressure Relief Valve Watts 174A With A 2" Inlet / 2" Outlet 30-150 psi W/ Bronze Body
6.	2" Brass Street Elbow
7.	No.16 Wire Mesh Screen (Non-Corrodible)
8.	4" Thick Concrete Pad - Class 'C' Concrete
9.	Vandal enclosure to be centered on the concrete pad

NOTE:

1. Pressure relief valves are typically located just down stream of a pressure reducing station or where system conditions might be subject to greater than allowable pressures.
2. The relief valve assembly and vandal enclosure shall be located out of the roadway, but within the right-of-way or easement.

ARIZONA WATER COMPANY

STANDARD SPECIFICATION
FOR THE INSTALLATION OF

TYPICAL PRESSURE RELIEF VALVE ASSEMBLY

DRAWN BY:	APPROVED BY:	DATE:	△	
CCO	MW	3/20/1986	08.29.2006	E-9-14-1

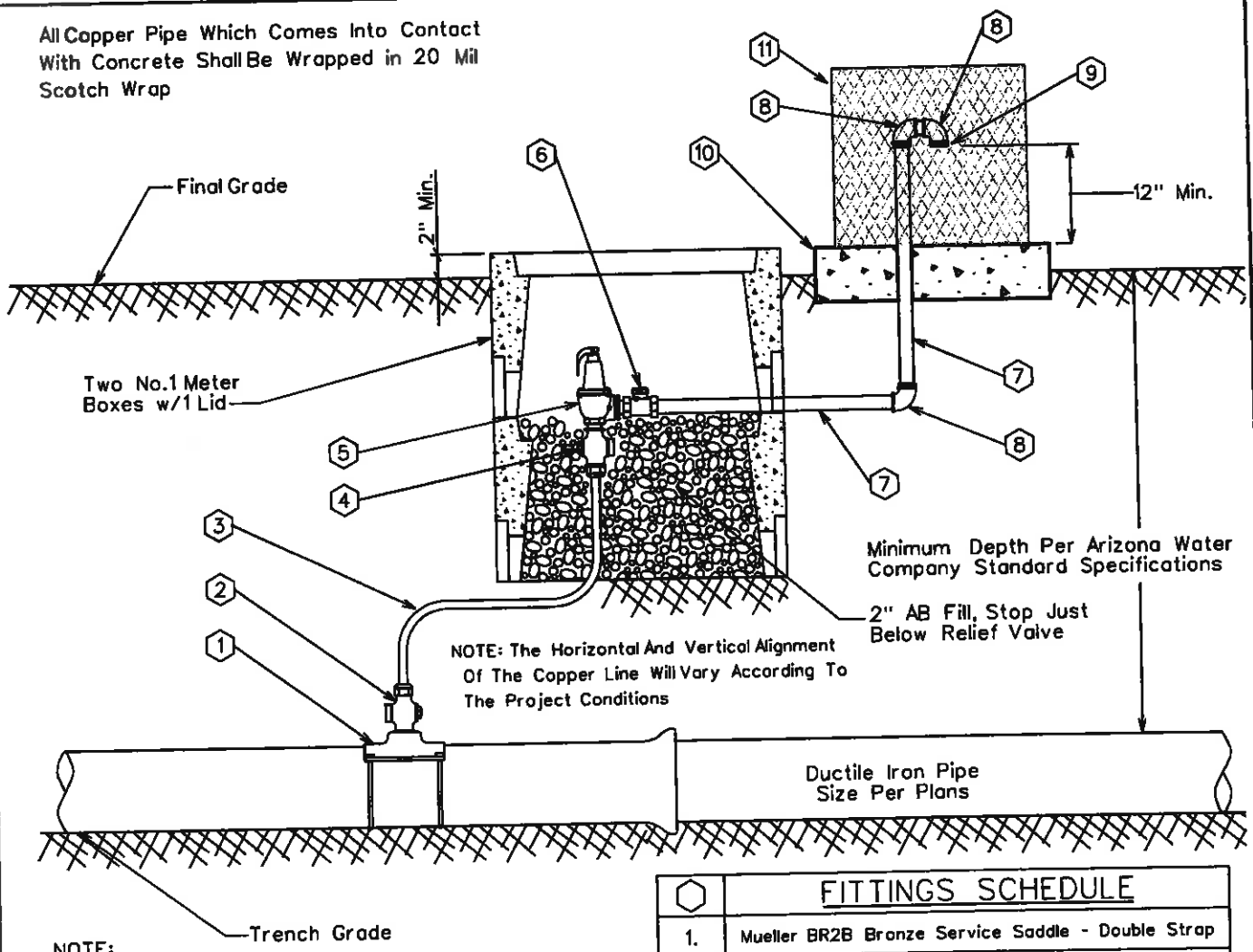

NOTE:

1. Pressure relief valves are typically located just down stream of a pressure reducing station or where system conditions might be subject to greater than allowable pressures.
2. The relief valve assembly and vandal enclosure shall be located out of the roadway, but within the right-of-way or easement.

⬡	FITTINGS SCHEDULE
1.	Mueller BR2B Bronze Service Saddle - Double Strap
2.	2" Mueller B-25008 Taper x Comp. Ball Corp Stop
3.	2" Type 'M' Rigid Copper w/NO Splices - Field Fit
4.	2" Mueller B-25028 IP x Comp. Ball Corp Stop
5.	2" Pressure Relief Valve Watts 174A With A 2" Inlet / 2" Outlet 30-150 psi W/ Bronze Body
6.	2" Bronze Check Valve Watts Series CV
7.	2" Schedule 40 Cut Pipe - Field Fit
8.	2" Brass Street Elbow
9.	No.16 Wire Mesh Screen (Non-Corrodible)
10.	4" Thick Concrete Pad - Class 'C' Concrete
11.	Guardshack, Model GS-1, Available From BPDI, Inc. Available In Leaf Green Or Desert Tan

ARIZONA WATER COMPANY

STANDARD SPECIFICATION
FOR THE INSTALLATION OF

PRESSURE RELIEF VALVE - NORTHERN REGION

DRAWN BY:	APPROVED BY:	DATE:		
CCO	MW	3/20/1986	△08.29.2006	E-9-14-2

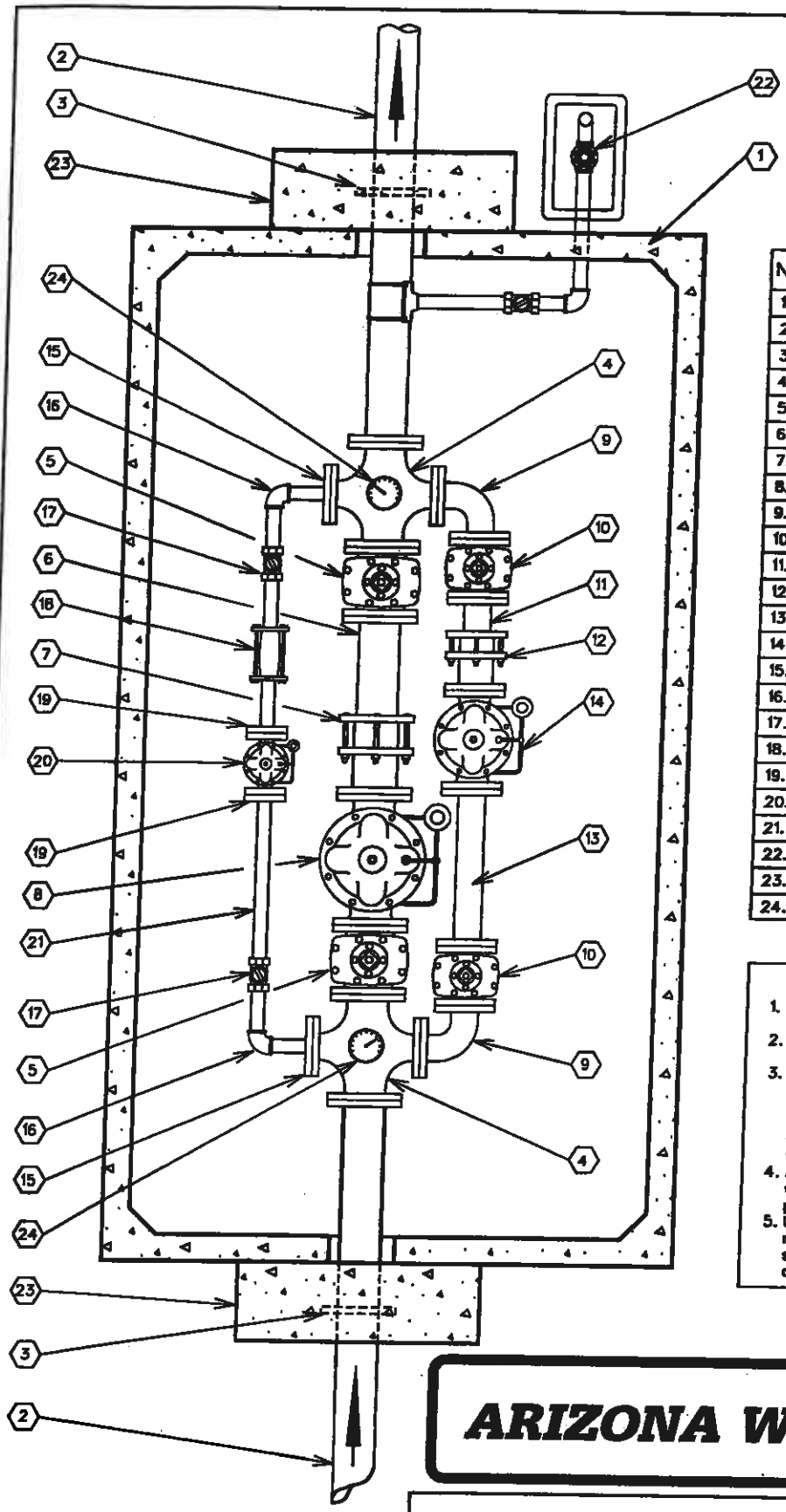

No.	FITTINGS SCHEDULE
1.	612 LA Conc. Vault (See Note 3)
2.	6"x6'-0" D.I.P. Spool Flg.xP.E.
3.	6" Megalug (Thrust Anchor)
4.	6"x4" Cross Flg.
5.	6" Gate Valve Flg.
6.	6"x2'-0" D.I.P. Spool Flg.xP.E.
7.	6" Flg. Coup. Adapt. (Rockwell 913)
8.	6" High Flow Pressure Reducing Valve Flg.
9.	4" 90° Ell. Flg.
10.	4" Gate Valve Flg.
11.	4"x1'-0" D.I.P. Spool Flg.xP.E.
12.	4" Flg. Coup. Adapt. (Rockwell 913)
13.	4"x2'-0" D.I.P. Spool Flg.
14.	4" Medium Flow Pressure Reducing Valve Flg.
15.	2"x9" O.D. Reducing Flg. (I.P.T.)
16.	2" 90° Ell. F.I.P.
17.	2" Ball Valve F.I.P.
18.	2" Comp. Coup. (Rockwell 411)
19.	2" Companion Flg. (I.P.T.)
20.	2" Low Flow Pressure Reducing Valve Flg.
21.	2" Sched. 40 Stl. Pipe
22.	2" Pressure Relief Valve (See E-9-14-1)
23.	12"x36"x36" Conc. Thrust Block P.I.P.
24.	Pressure Gauge w/shut off valve

NOTE:

1. Use Rowley pipe supports or equivalent as needed. (See E-9-12-4)
2. Pipe support locations to be determined by field personnel.
3. Vault-612 LA top section w/12" Dia. sump hole. Cover-concrete slab top w/(4) 4'-0" x2'-6" aluminum spring loaded hinged style covers for non-traffic loading areas. For areas w/low density traffic, cover is to be designed for H-20 traffic loading.
4. All Sched. 40 Stl. pipe outside of vault to be wrapped w/10-20 Mil. Scotchwrap corrosion protection tape.
5. Use deflection fittings (45° Ells.) to achieve necessary depths & cover as shown on the standard specification for the installation of a concrete vault (E-9-12-5).

ARIZONA WATER COMPANY

STANDARD SPECIFICATION
FOR THE INSTALLATION OF

PRESSURE REDUCING STATION

DRAWN BY:	APPROVED BY:	DATE:	△	
JPK	MW	11-16-88	9-27-95	E-9-15-1

1. Specific Items To Be Painted Deer-O Pure White Enamel:

A. All Booster Pumps.
B. All Electrical Motors And Gas Engines.
C. Well Pump Discharge Heads.
D. Electrical Panel.

2. Specific Items To Be Painted Frost Cap White Or Deer-O Pure White Enamel:

A. Well Shelter.

3. Specific Items To Be Painted OSHA Orange:

A. Electrical Conduit.

4. All Other Items To Be Painted With Either:
(At Manager's Discretion)

A. Cholla Green
B. Forest Green
C. Sonora Beige
D. Red Rock
E. Rock Brown
F. Deer-O Pure White
G. Elkhorn Cactus

ARIZONA WATER COMPANY

STANDARD SPECIFICATION
FOR THE INSTALLATION OF

PAINT COLOR SELECTION

DRAWN BY:	APPROVED BY:	DATE:	△	
CCO		3/20/1986	2/13/2001	E-9-16-1

1. Tank shall conform to AWWA Specification D100-84 with exceptions noted below.

*2. 1/4" minimum shell plate.

3. Minimum of 12" diameter roof vent, screened with No. 16 non-corrodible wire mesh, to be located on a 24" diameter round hinged manhole opening at the center of the tank to provide access to the dollar plate.

4. Overflow pipe shall be the same diameter as the inlet pipe and shall terminate 12 to 24 inches above splash pad or a minimum of 2 overflow pipe diameters above weir box high water level.

5. Storage tank shall be placed upon adequately compacted base material.

6. 6" minimum floor mounted tank drain outlet to be located close to the outer shell.

7. Tank and related fittings shall be enclosed with a 6 foot chain link fence with lockable gates and anti-personnel wire on top of fence.

8. Liquid level shall be indicated by a target and target board on the outside surface of the tank.

9. 24 inch diameter manholes shall be provided on the roof and on the shell near the bottom of the tank. The roof manhole cover shall overlap the manhole by at least 2 inches to provide a rain tight closure. Roof manhole shall be hinged and equipped with a lock. Shell manhole cover to be hinged and bolted in place. *Tanks larger than a 60 foot diameter require 2 shell manholes.

10. Inside and outside ladders shall be located at the roof manhole. Outside ladder shall be caged with locking trap door. Bottom 8 feet of cage shall be enclosed to within 1/2" of shell with 10 gauge sheet steel.

11. Finished tank shall be disinfected in accordance with Arizona Department of Health Services Engineering Bulletin No. 8 before being placed into service.

12. The following information will be included with application for approval to construct:

1. Tank location_____
2. Tank height_____
3. Tank diameter_____
4. Tank capacity_____
5. Method of water level control_____

_____

13. The storage tank will not be constructed within the 100 year flood plain and the tank site will be graded to slope away from the tank.

14. The welded steel storage tank will be coated as per AWWA Specification D102, and N.S.F. Standard 61.

*Exceptions to AWWA Specification D100-84

FOUNDATION NOTES

1. FINISH CONCRETE SURFACE MUST SLOPE UPWARDS FROM THE STEEL BAND APPROX. 1" IN 10'-0".

2. TOP OF STEEL BAND MUST BE MAINTAINED LEVEL TO WITHIN 1/8".

3. INSTALL 8-2" DIA.x10'-0" P.V.C. WEEP LINES, EQUALLY SPACED (EVERY 45°), PERFORATE 8'-0" OF LINE WITH 1/2" DIA. HOLES @ 6" O.C. PLUG INTERIOR END OF LINE w/2" CAP.

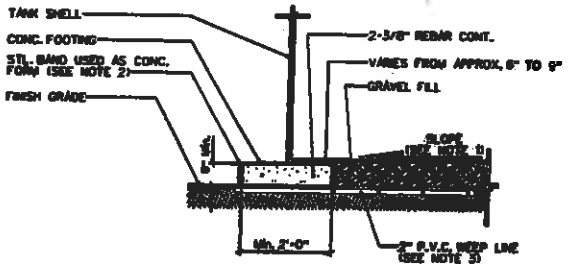

FOUNDATION DETAIL

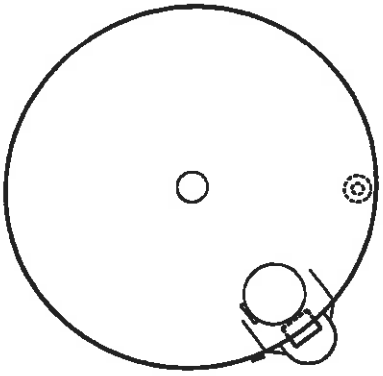

PLAN VIEW

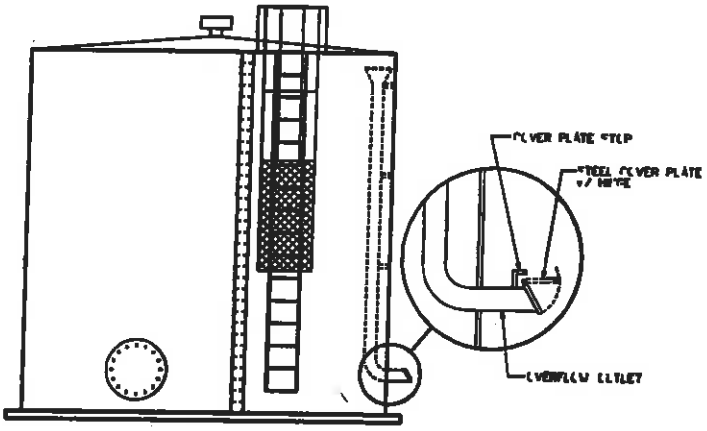

PROFILE VIEW

ARIZONA WATER COMPANY

STANDARD SPECIFICATION FOR THE INSTALLATION OF STEEL WATER STORAGE TANK				
DRAWN BY: JPK	APPROVED BY: MJW	DATE: 10-17-88	△ 2-12-96	E-9-17-1

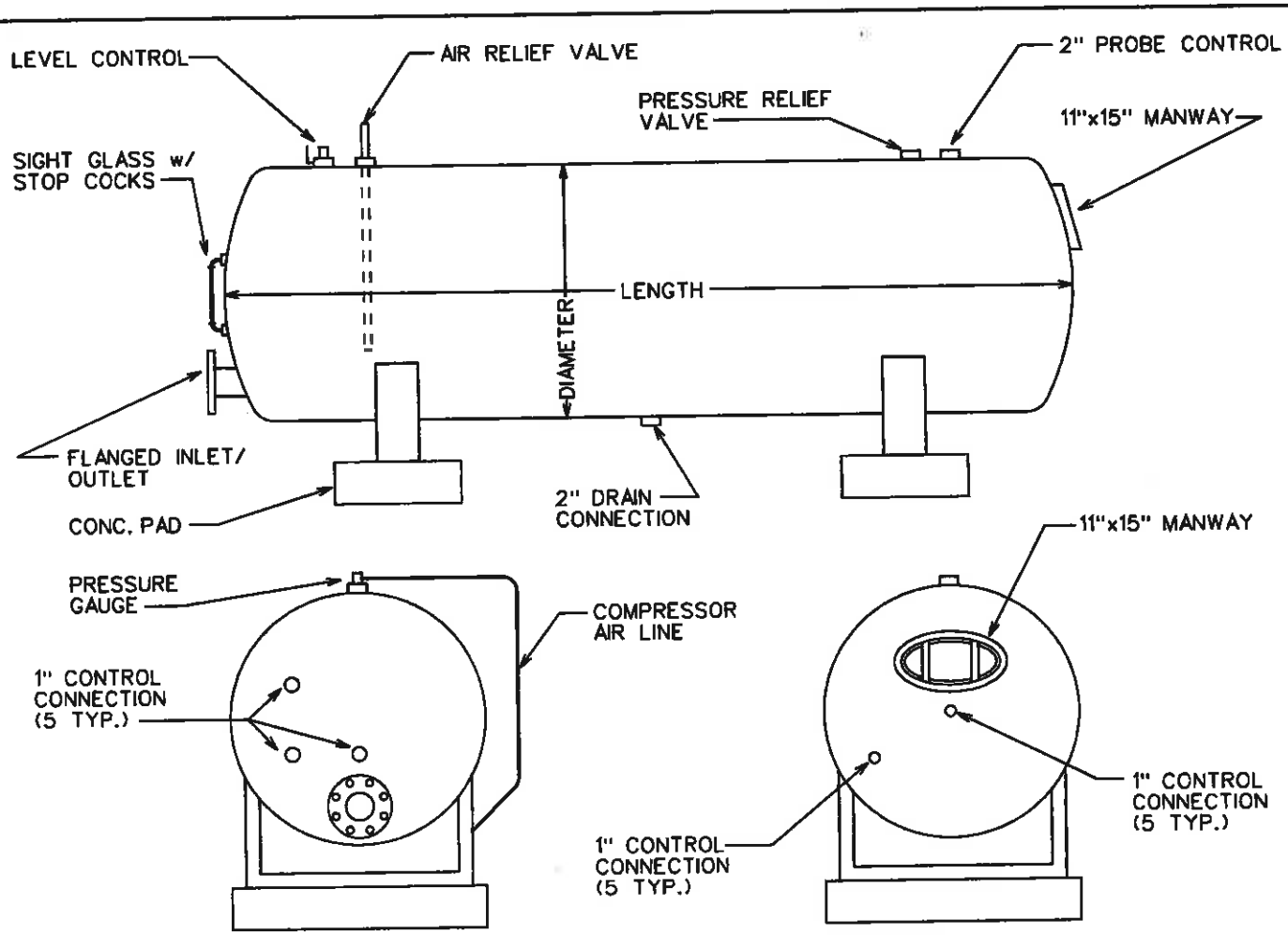

1. ALL HYDROPNEUMATIC TANKS SHALL BE DESIGNED & CONSTRUCTED IN ACCORDANCE WITH THE CURRENT REQUIREMENTS OF THE ASME CODE FOR UNFIRED PRESSURE VESSELS, SECTION VIII, DIVISION 1.
2. FINISHED TANK SHALL BE DISINFECTED IN ACCORDANCE WITH ADEQ BULLETIN No. 8 BEFORE BEING PLACED INTO SERVICE.
3. THE WELDED STEEL HYDROPNEUMATIC TANK WILL BE COATED AS PER AWWA SPECIFICATION D102 & NSF STANDARD 61.
4. THE FOLLOWING INFORMATION WILL BE INCLUDED WITH THE APPLICATION FOR APPROVAL TO CONSTRUCT.
   1. Tank Location _____
   2. Tank Length _____
   3. Tank Diameter _____
   4. Tank Capacity _____
   5. Maximum Working Pressure _____

ARIZONA WATER COMPANY

STANDARD SPECIFICATION
FOR THE INSTALLATION OF
HYDROPNEUMATIC TANK

DRAWN BY:	APPROVED BY:	DATE:	△	
JPK	MW	3-20-1986	01.16.2007	E-9-18-1

NOT
CONVERTED
TO
CAD

ARIZONA WATER COMPANY

STANDARD SPECIFICATION
FOR THE INSTALLATION OF

WELL SHELTER

DRAWN BY:	APPROVED BY:	DATE		
CB		03.20.1986	△04.03.2001	E-9-19-1

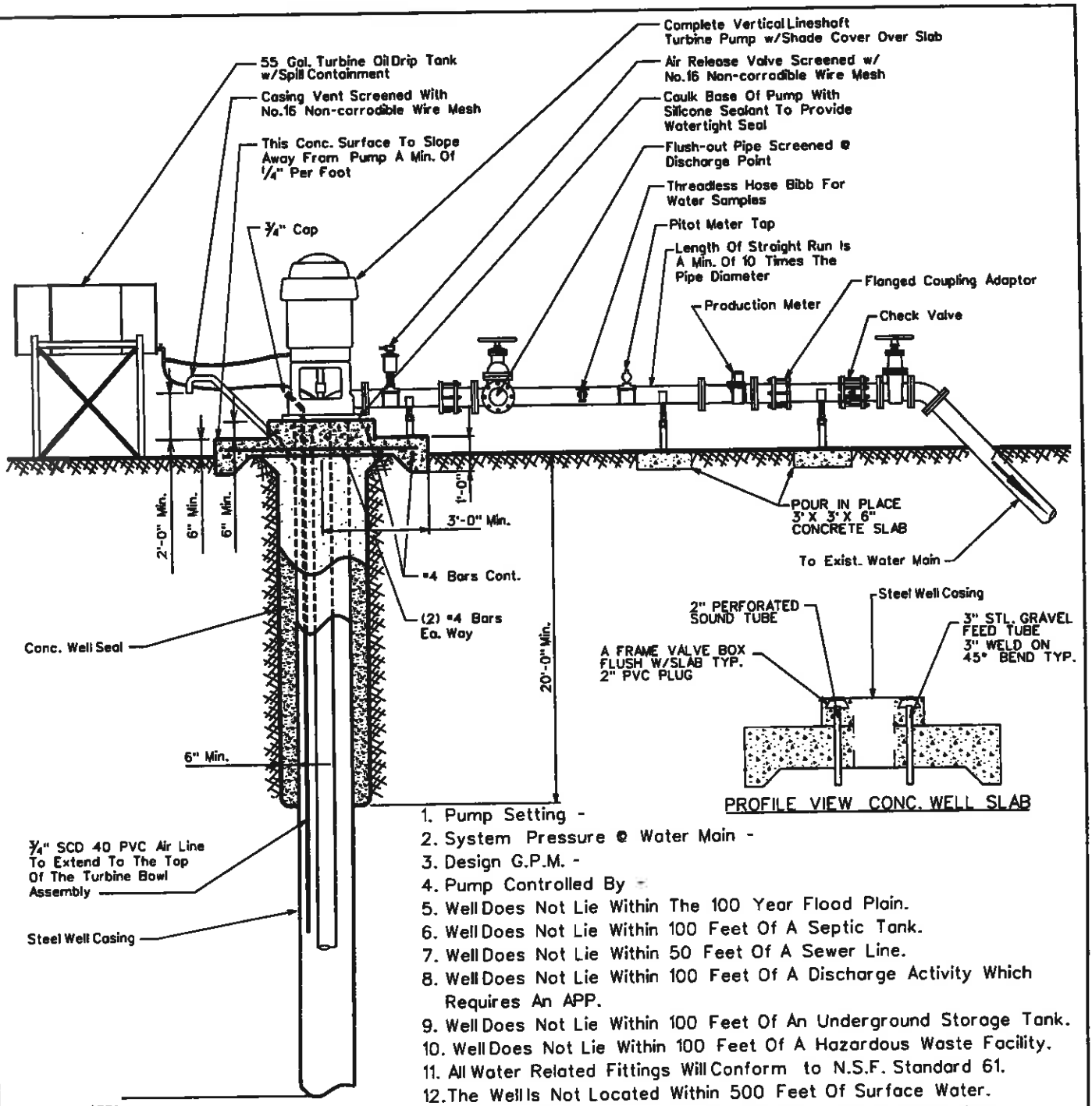

1. Pump Setting -
2. System Pressure @ Water Main -
3. Design G.P.M. -
4. Pump Controlled By -
5. Well Does Not Lie Within The 100 Year Flood Plain.
6. Well Does Not Lie Within 100 Feet Of A Septic Tank.
7. Well Does Not Lie Within 50 Feet Of A Sewer Line.
8. Well Does Not Lie Within 100 Feet Of A Discharge Activity Which Requires An APP.
9. Well Does Not Lie Within 100 Feet Of An Underground Storage Tank.
10. Well Does Not Lie Within 100 Feet Of A Hazardous Waste Facility.
11. All Water Related Fittings Will Conform to N.S.F. Standard 61.
12. The Well Is Not Located Within 500 Feet Of Surface Water.
13. The Site Will Be Graded To Provide Adequate Drainage Away From The Well.
14. 6.88 lbs. of Davis #8084 Grey Dye, Per Yard, For 2500 PSI Concrete

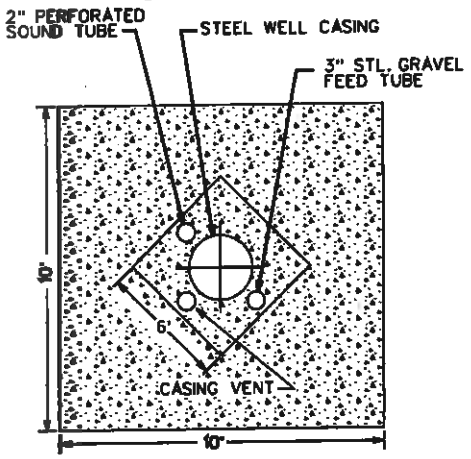

PLAN VIEW CONC. WELL SLAB

ARIZONA WATER COMPANY

STANDARD SPECIFICATION
FOR THE INSTALLATION OF

TYPICAL WELL W/ LINESHAFT TURBINE PUMP

DRAWN BY:	APPROVED BY:	DATE:	△	
JW	M.W.	3-20-86	9/15/04	E-9-20-1

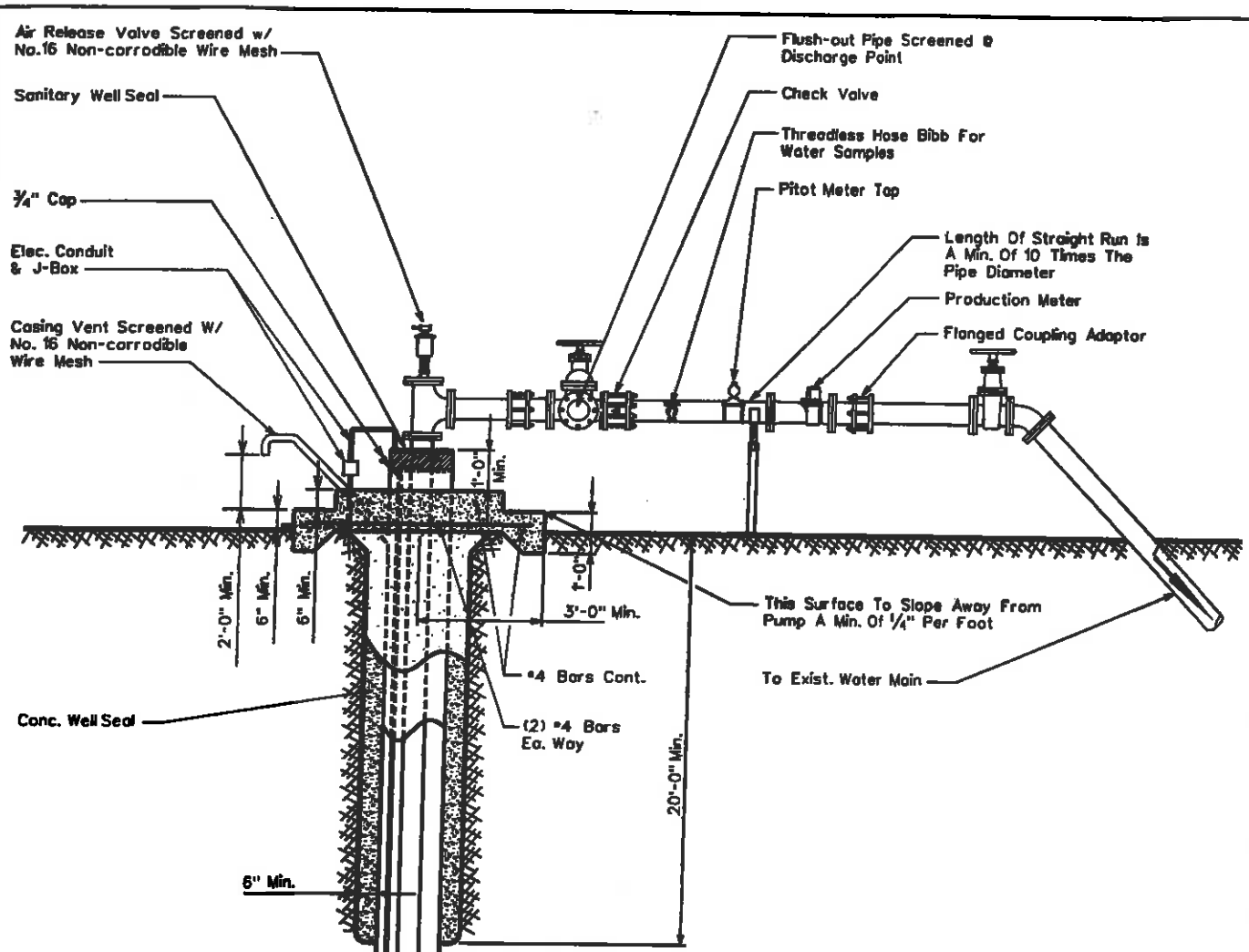

1. Pump Setting -
2. System Pressure @ Water Main -
3. Design G.P.M. -
4. Pump Controlled By -
5. Well Does Not Lie Within The 100 Year Flood Plain.
6. Well Does Not Lie Within 100 Feet Of A Septic Tank.
7. Well Does Not Lie Within 50 Feet Of A Sewer Line.
8. Well Does Not Lie Within 100 Feet Of A Discharge Activity Which Requires An APP.
9. Well Does Not Lie Within 100 Feet Of An Underground Storage Tank.
10. Well Does Not Lie Within 100 Feet Of A Hazardous Waste Facility.
11. All Water Related Fittings Will Conform to N.S.F. Standard 61.
12. The Well Is Not Located Within 500 Feet Of Surface Water.
13. The Site Will Be Graded To Provide Adequate Drainage Away From The Well.

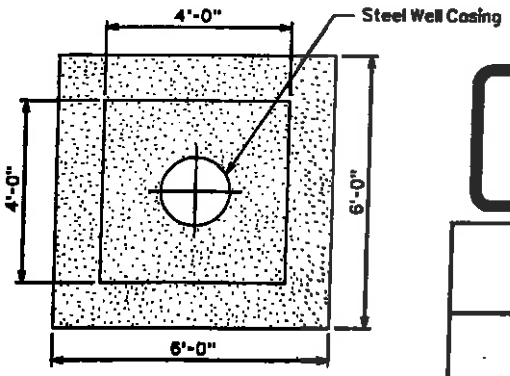

PLAN VIEW CONC. WELL SLAB

ARIZONA WATER COMPANY

STANDARD SPECIFICATION
FOR THE INSTALLATION OF

TYPICAL WELL W/ SUBMERSIBLE TURBINE PUMP

DRAWN BY:	APPROVED BY:	DATE	△	
jpk	M.W.	3-20-86	2-16-01	E-9-21-1

All New Purchases To Conform To The Following:

Column Pipe

4" I.D. - 8	Threads	Per	Inch	Tapered	¾"	Per	Foot	Right	Hand
6" I.D. - 8	"	"	"	"	"	"	"	"	"
8" I.D. - 8	"	"	"	"	"	"	"	"	"
10" I.D.- 8	"	"	"	"	"	"	"	"	"
12" I.D.- 8	"	"	"	"	"	"	"	"	"
14" I.D.- 8	"	"	"	"	"	"	"	"	"

Oil Tube - Peerless Type

1½" O.D. - 14	Threads	Per	Inch	Right	Hand	
2" O.D. - 12	"	"	"	"	"	
2½" O.D. - 10	"	"	"	"	"	
3" O.D. - 10	"	"	"	"	"	
3½" O.D. - 10	"	"	"	"	"	
4" O.D. - 10	"	"	"	"	"	

Line Shaft

¾" O.D. - 10	Threads	Per	Inch	Left	Hand	
1" O.D. - 14	"	"	"	"	"	
1-3/16" O.D. - 10	"	"	"	"	"	
1-1/2" O.D. - 10	"	"	"	"	"	
1-11/16" O.D. - 10	"	"	"	"	"	
1-15/16" O.D. - 10	"	"	"	"	"	
2-3/16" O.D. - 10	"	"	"	"	"	
2-7/16" O.D. - 8	"	"	"	"	"	

ARIZONA WATER COMPANY

STANDARD SPECIFICATION
FOR THE INSTALLATION OF

COLUMN PIPE, OIL TUBE AND LINE SHAFT

DRAWN BY:	APPROVED BY:	DATE:		
CCO		3/20/1996	△ 2/13/2001	E-9-22-1

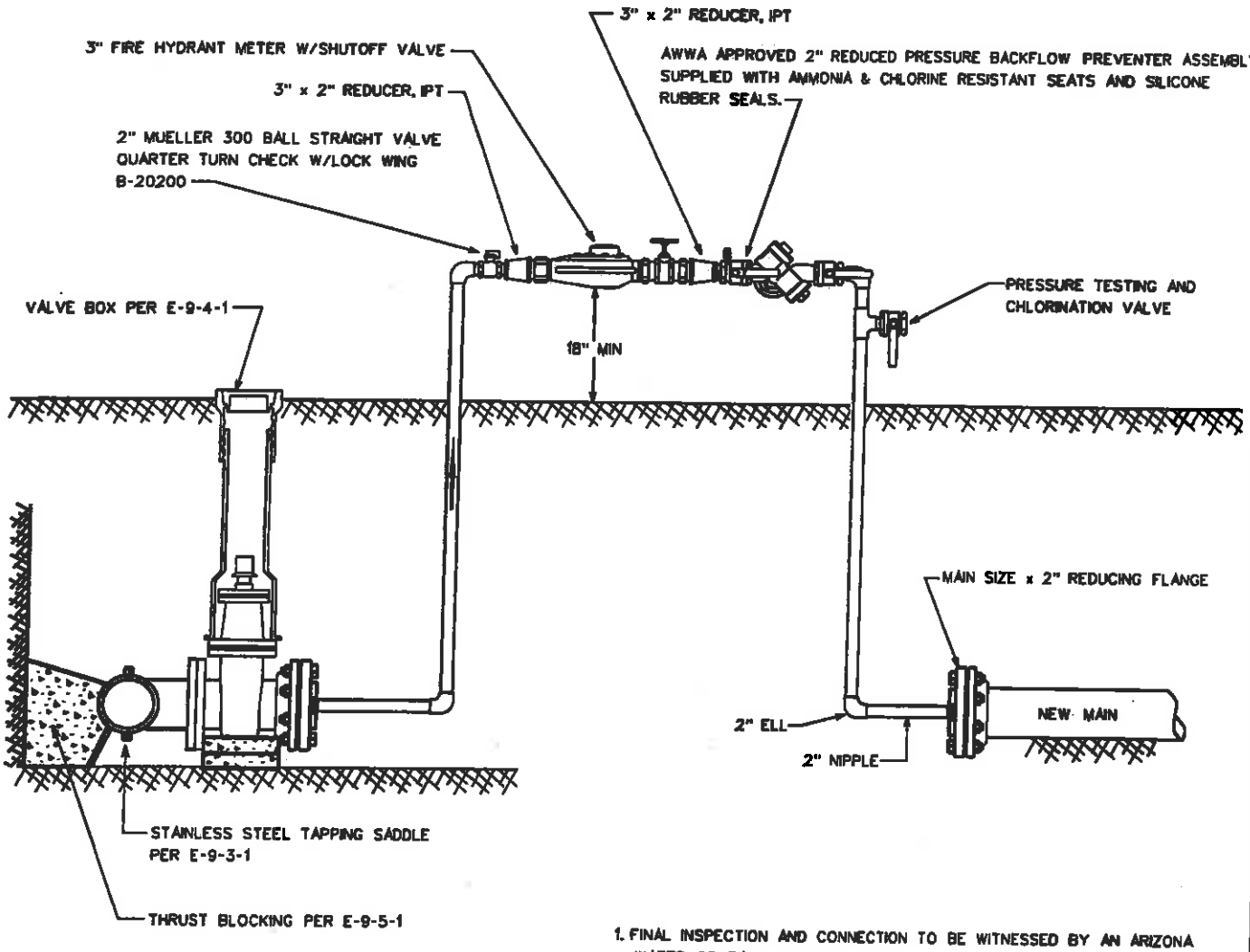

1. FINAL INSPECTION AND CONNECTION TO BE WITNESSED BY AN ARIZONA WATER COMPANY REPRESENTATIVE.
2. REDUCING FLANGES TO BE PROPERLY RESTRAINED.
3. INSTALL JUMPER TAP FOR TEMPORARY METER DOWNSTREAM OF THE REDUCING FLANGE FOR PRESSURE AND BACTEE TESTING.
4. JUMPER ASSEMBLY MUST BE A MINIMUM OF 18" ABOVE FINISHED GRADE.
5. BACKFLOW ASSEMBLY REQUIRES CERTIFICATION.
6. ASSEMBLY NOT TO BE REMOVED AND SPOOL PIECE INSTALLED FOR FINAL CONNECTION UNTIL ALL TESTING, BACTERIAL CLEARANCE AND FINAL INSPECTIONS HAVE BEEN OBTAINED.
7. ALL NEW PIPING SHALL BE PROPERLY RESTRAINED.

ARIZONA WATER COMPANY

STANDARD SPECIFICATION
FOR THE INSTALLATION OF

HOT TAP & JUMPER METER CONNECTION

DRAWN BY:	APPROVED BY:	DATE:	△	
CB	MJW	05.14.2004		E-9-23-1

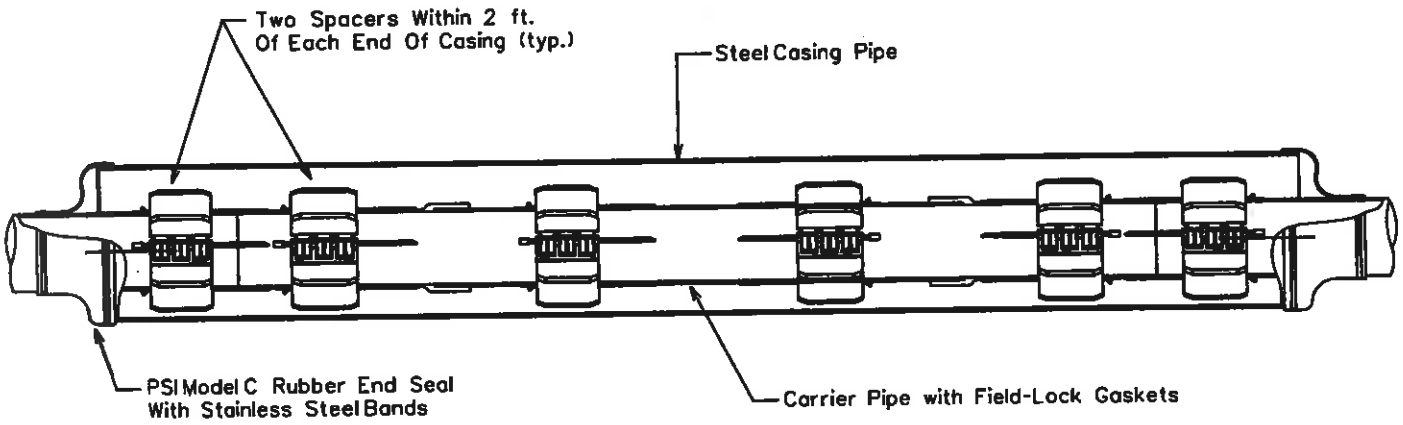

CROSS SECTION

The casing spacers shall be the PSI Ranger II Casing Spacers as manufactured by Pipeline Seal and Insulator, Inc., Houston, Texas.

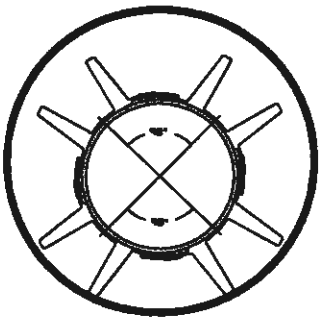

SECTION CUT

End Seals
After insertion of the carrier pipe into the casing, the ends of the casing shall be closed by installing 1/8" thick synthetic rubber end seals equal to the PSI Model "C" end seal as manufactured by Pipeline Seal and Insulator, Inc., Houston, Texas.

NOTE: The Carrier Pipe Shall Be Polywrapped Prior To The Skid Installation & Insertion Into The Carrier Casing For Divisions Requiring Polywrapped Pipe.

OD Push On Joint Bell	OD M.J. BELL
6" - 8.66"	6" - 11.12"
8" - 10.82"	8" - 13.37"
12" - 15.05"	12" - 17.94"
16" - 19.74"	16" - 22.56"
20" - 23.98"	20" - 27.08"
24" - 28.16"	24" - 31.58"
30" - 35.40"	30" - 39.12"
36" - 41.84"	36" - 46.00"
48" - 55.94"	48" - 60.00"

*Thickness Of Skid To Extend A Minimum of ½" Above The O.D. Of The Pipe Bell or Gland.

PIPE SIZE	CASING SIZE	CASING SIZE ID	CASING SCHEDULE	WALL THICKNESS	SKID SIZE
6"	16"	15.25"	STD.	.375	*x4x12
8"	18"	18.25"	STD.	.375	*x4x12
12"	22"	21.25"	STD.	.375	*x4x12
16"	28"	27.25"	STD.	.375	*x4x12
20"	32"	31.25"	STD.	.375	*x4x12
24"	36"	35.25"	STD.	.375	*x4x12
30"	48"	47.25"	STD.	.375	*x4x12
36"	54"	53.25"	STD.	.375	*x4x12
48"	66"	65.25"	STD.	.375	*x4x12

ARIZONA WATER COMPANY

STANDARD SPECIFICATION
FOR THE INSTALLATION OF

TYPICAL WATER LINE ENCASEMENT

DRAWN BY:	APPROVED BY:	DATE:	△	
CB		3/20/1996	09.27.2006	E-9-24-1

CALCIUM HYPOCHLORITE TABLET CHLORINATOR FEEDER SPECIFICATIONS

SCOPE - This specification describes a ARCH Chemicals Calcium Hypochlorite Tablet Chlorination System as manufactured by ARCH Chemicals, 501 Merritt Seven, P.O. Box 5204, Norwalk, CT, 06856-5204.

DESCRIPTION - The chlorination system shall be completely assembled, ready to install. The chlorination system shall be a ARCH Chemicals Calcium Hypochlorite Tablet Feeder, or its equivalent, and shall be supplied with all its components factory mounted.

COMPONENTS - The Chlorination system shall have the following components:

A. 1-½" ARCH Chemical solid calcium hypochlorite tablet feeder
B. Polyethylene system enclosure
C. Integrated, level controlled solution tank
D. Adjustable flow control valve
E. Manual on/off valve (at inlet)
F. Chemical metering pump
G. On/off pump control switch
H. Waterproof electrical junction box
I. Corrosion resistant schedule 40 piping
J. Reverse flow check valves
K. Total solution output control valve

ELECTRICAL FIXTURES - The following electrical fixtures shall be provided:

A. Safety switch, 2 pole, fused for 30 Amps, for 120 Volts, 60 cycle, single phase power.

CHLORINATOR DESIGN - The chlorination facility shall be designed and constructed in accordance with Arizona State Department of Health Engineering Bulletin Number 8 - "Disinfection of Water Systems". Latest Revision.

CHLORINATION EQUIPMENT - The chlorination equipment shall be a ARCH Chemicals Calcium Hypochlorite tablet chlorinator, approved by NSF Standard 61.

CHLORINATOR OPERATION - The chlorination facility shall be operated in accordance with Arizona State Department of Health Engineering Bulletin Number 8, "Disinfection of Water Systems", Table 1. latest revision.

CHLORINATOR SYSTEM DESCRIPTION - ARCH Chemicals tablet chlorinator systems incorporate a patented chlorinator which is designed to utilize ARCH Chemicals 1-½" solid calcium hypochlorite tablets (Approved NSF Standard 60). Meets AWWA Standard B-300, EPA Registration # 1258-1179.The chlorinator is mounted on a polyethylene system enclosure. The inlet water is sprayed on the calcium hypochlorite tablet and collected in a solution tank. This chlorinated solution is then pumped out of the tank through a chemical metering pump. This metering pump is then adjusted to obtain the desired CL residual.

ARCH Chemicals Calcium Hypochlorite Tablet Chlorinator

NTS

HYPOCHLORINATOR COMPONENTS:

1. Chemical Metering Pump
2. Pump Suction Connection
3. Pump Discharge Connection
4. Inlet Water Assembly
5. Inlet Water Solenoid Valve
6. Inlet Shut-Off Valve
7. Inlet Pressure Regulator
8. Inlet Water Pressure Gauge
9. Spray Nozzle Water Pressure Gauge
10. Inlet Strainer
11. Inlet Tubing Connection
12. Dry Chemical Hopper
13. Suction Line
14. Electrical Control Box With Power On/Off
15. Electric Mixer
16. Solution Discharge Connection
17. Tank Drain Valve
18. Observation Port
19. Mixed Chemical Holding Tank
20. Pressure Relief Valve
21. Pump Speed Control
22. High Level Shut-Off Float Switch
23. Water Spray Nozzles

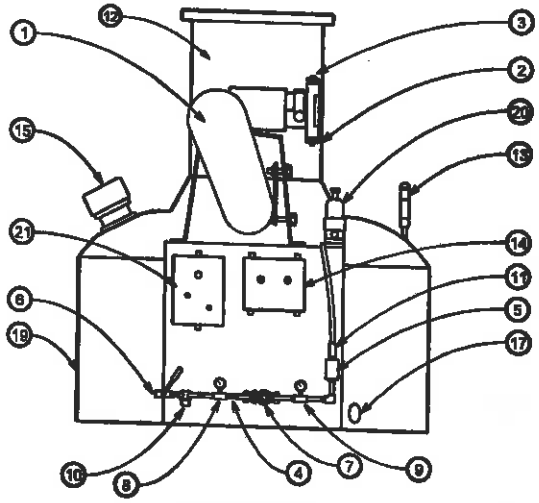

FRONT VIEW

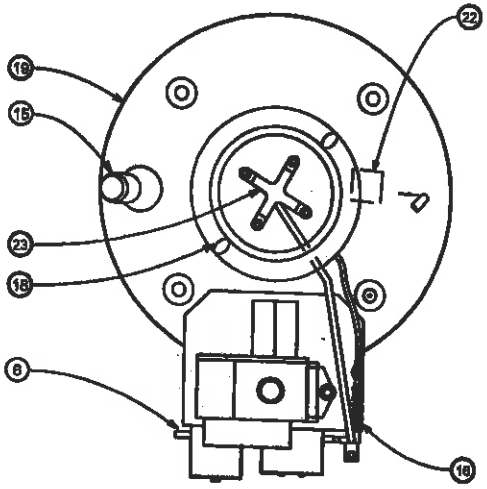

TOP VIEW

HOPPER REMOVED FOR CLARITY

Chlorinator Fluid Schematic

NTS

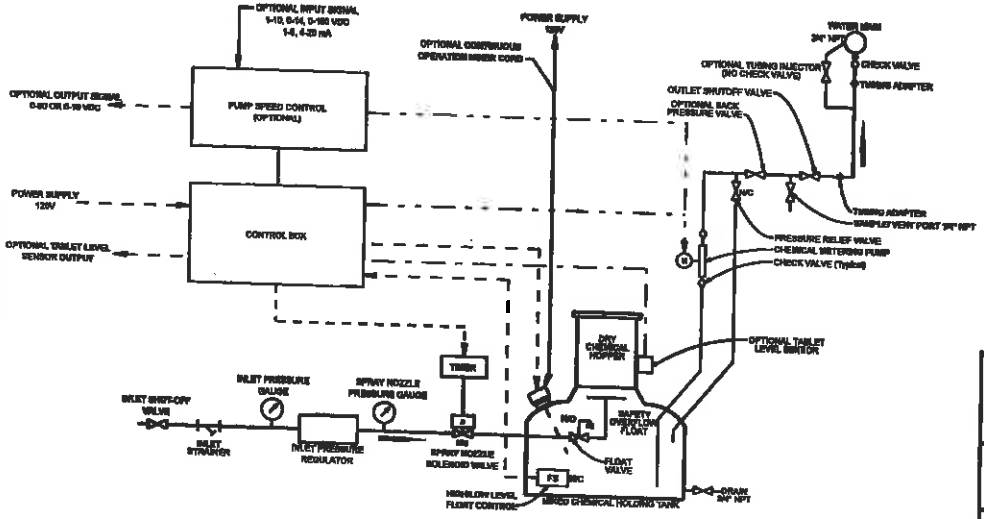

ARIZONA WATER COMPANY

STANDARD SPECIFICATION
FOR THE INSTALLATION OF

CALCIUM HYPOCHLORITE TABLET CHLORINATOR

DRAWN BY:	APPROVED BY:	DATE:	△	
CB	MW	02-09-2000		E-9-25-1

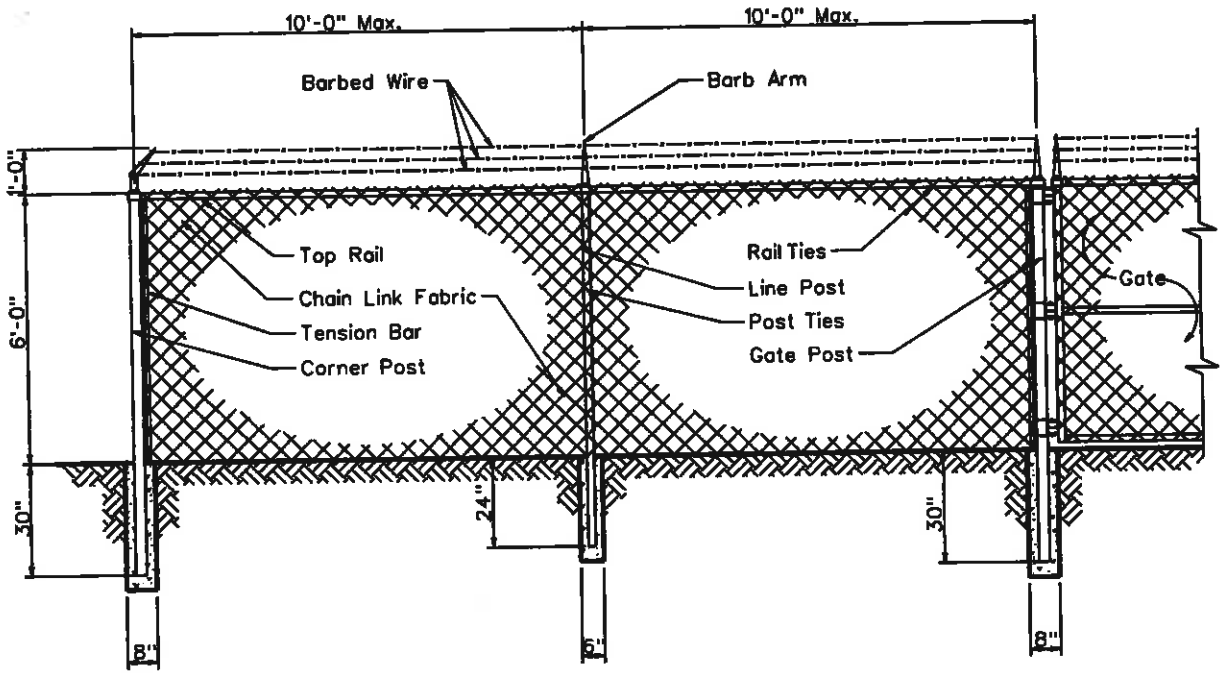

Line Post:	1-7/8" O.D.	1.74 lbs. P/L.F.	ASTM A-256
End Post:	2-7/8" O.D.	4.64 lbs. P/L.F.	ASTM A-256
Corner Post:	2-7/8" O.D.	4.64 lbs. P/L.F.	ASTM A-256
Gate Post:	2-7/8" O.D.	4.64 lbs. P/L.F.	ASTM A-256
Top Rail:	1-5/8" O.D.	4.64 lbs. P/L.F.	ASTM A-256
Chain Link Fabric:	9 Ga. 2" Mesh Galv. Before Weave		
Selvage:	Barb/Knuckle		
Fittings:	Pressed Steel		
Barb Wire:	2-1/2 Ga./2 Point		
Barb Arm:	1 Piece/45° Arm		
Tension Wire:	9 Ga./Galv.		
Line Post Set:	6"x24" In Concrete		
Terminal Post Set:	8"x30" In Concrete		

ARIZONA WATER COMPANY

STANDARD SPECIFICATION
FOR THE INSTALLATION OF

CHAIN LINK FENCE

DRAWN BY:	APPROVED BY:	DATE:	△	
CCO	MW	7/7/1992	2/9/2001	E-9-26-1

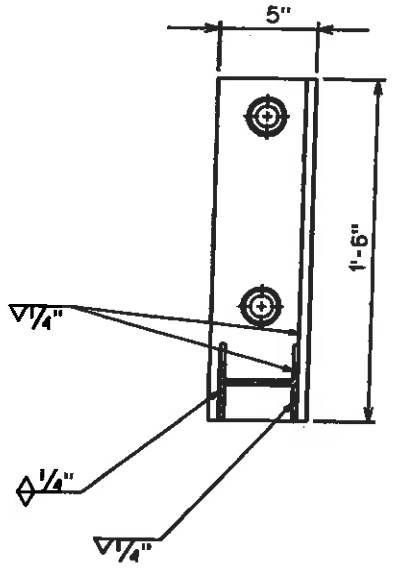

SECTION X-X

NOTES

1. Minimum 2 Supports Per Joint Of Pipe.
2. All Bolts Shall Have A Lock Washer Under The Nut.
3. All Nuts Shall Be Stainless Steel Series 304.

PIPE SIZE	A	B
8"	8"	15"
10"	9"	17"
12"	10"	19"

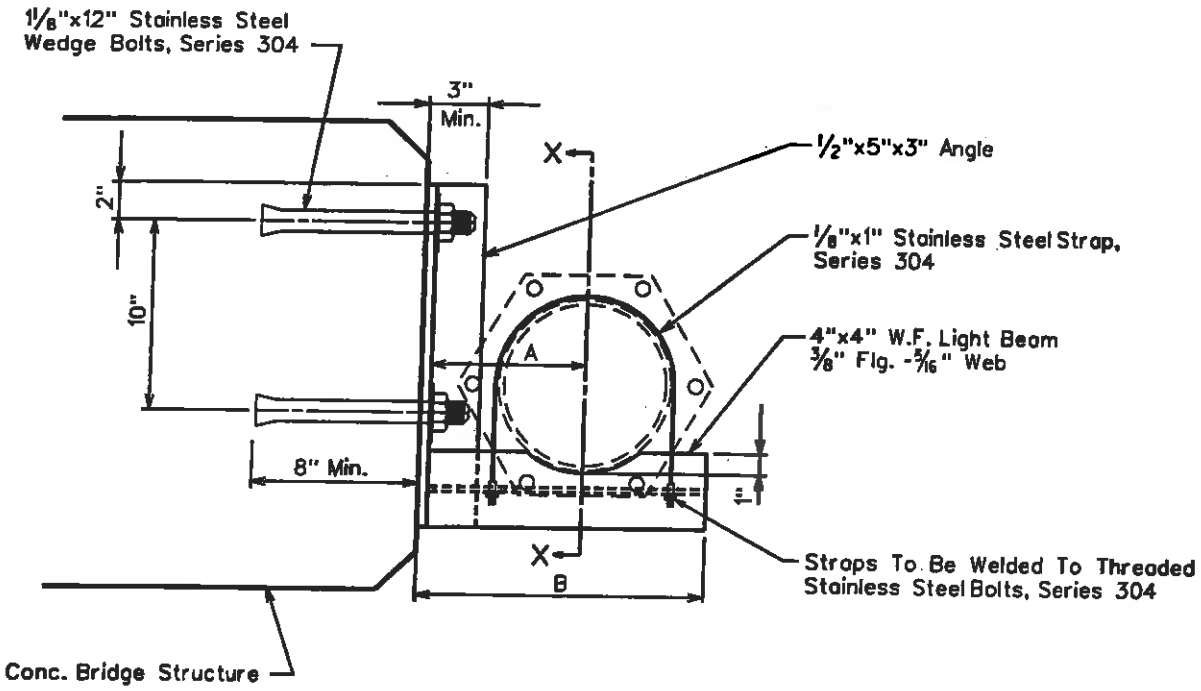

SUSPENSION DETAIL

ARIZONA WATER COMPANY

STANDARD SPECIFICATION
FOR THE INSTALLATION OF

SIDE HUNG WATER LINE SUSPENSION

DRAWN BY:	APPROVED BY:	DATE:		
JPK	MJW	7-12-96	△	E-9-27-1

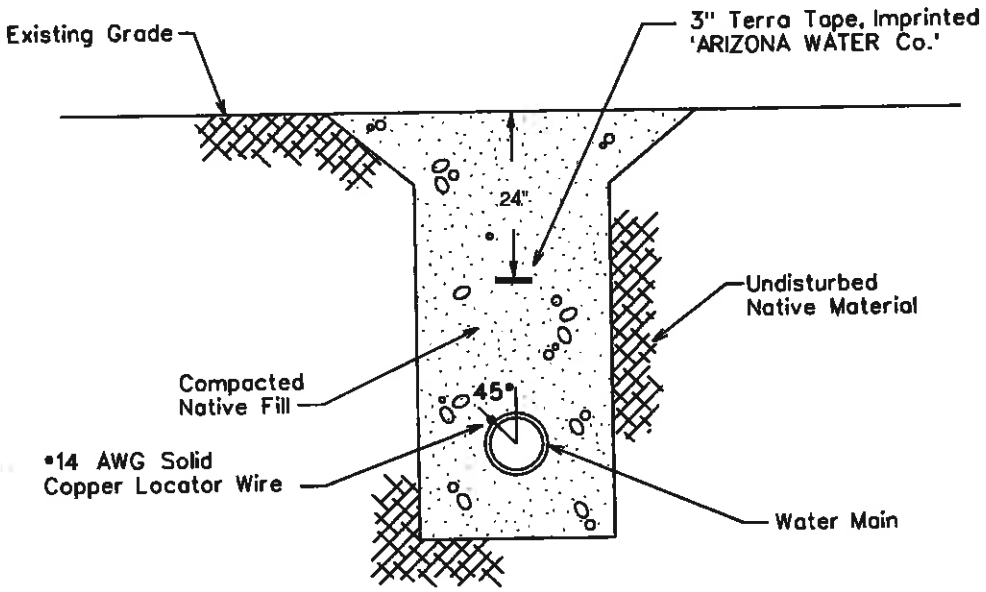

TYPICAL WATER TRENCH DETAIL

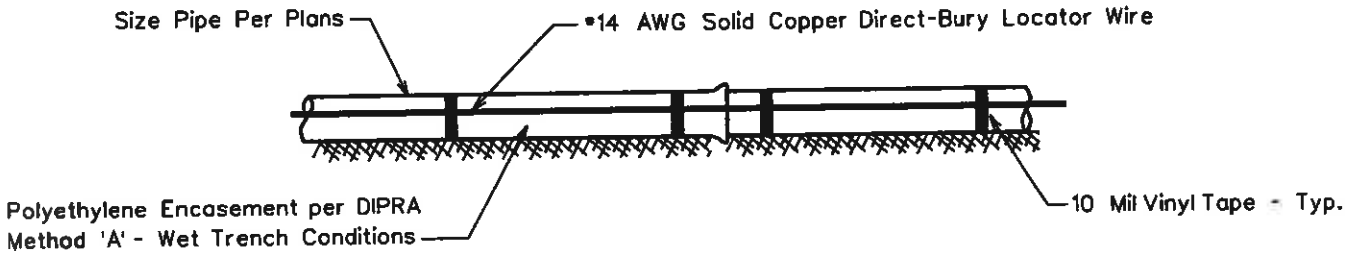

TYPICAL PROFILE VIEW

WIRE GENERAL NOTES:

1. All pipe shall have #14 AWG Solid Copper Direct-Bury Locator Wire Installed Directly To The Polywrap At 45° From The Vertical Center Of The Pipe and Shall Be Attached Using 10 Mil Vinyl Tape.
2. The Locating Wire Shall Terminate At the Top Of Each Valve Box and Be Capable of Extending 12" Above the Top Of The Box In Such A Manner So As Not To Interfere With Valve Operation.

TAPE GENERAL NOTES:

1. Use Terra Tape 3" Marking Tape As Manufactured By Reef Industries Inc. Of Houston, Texas (1-800-231-2417)
2. The Tape Is Blue & Imprinted 'ARIZONA WATER Co.'
3. INSTALLATION: The Pipe Warning Tape Shall Be Installed Over All Water Mains And Shall Be Buried 24 Inches Below The Surface Over The Center Of The Pipe.
   A) The Backfill Shall Be Sufficiently Leveled So That The Tape Is Installed On A Flat Surface.
   B) The Tape Shall Be Centered In The Trench With The Printed Side Up.
   C) Care Shall Be Exercised To Avoid Movement Of The Tape While The Remaining Backfill Is Moved Into The Trench.

ARIZONA WATER COMPANY

STANDARD SPECIFICATION
FOR THE INSTALLATION OF

PIPE WARNING TAPE AND LOCATOR WIRE

DRAWN BY:	APPROVED BY:	DATE:		
CB		03.24.1997	△09.27.2006	E-9-28-1

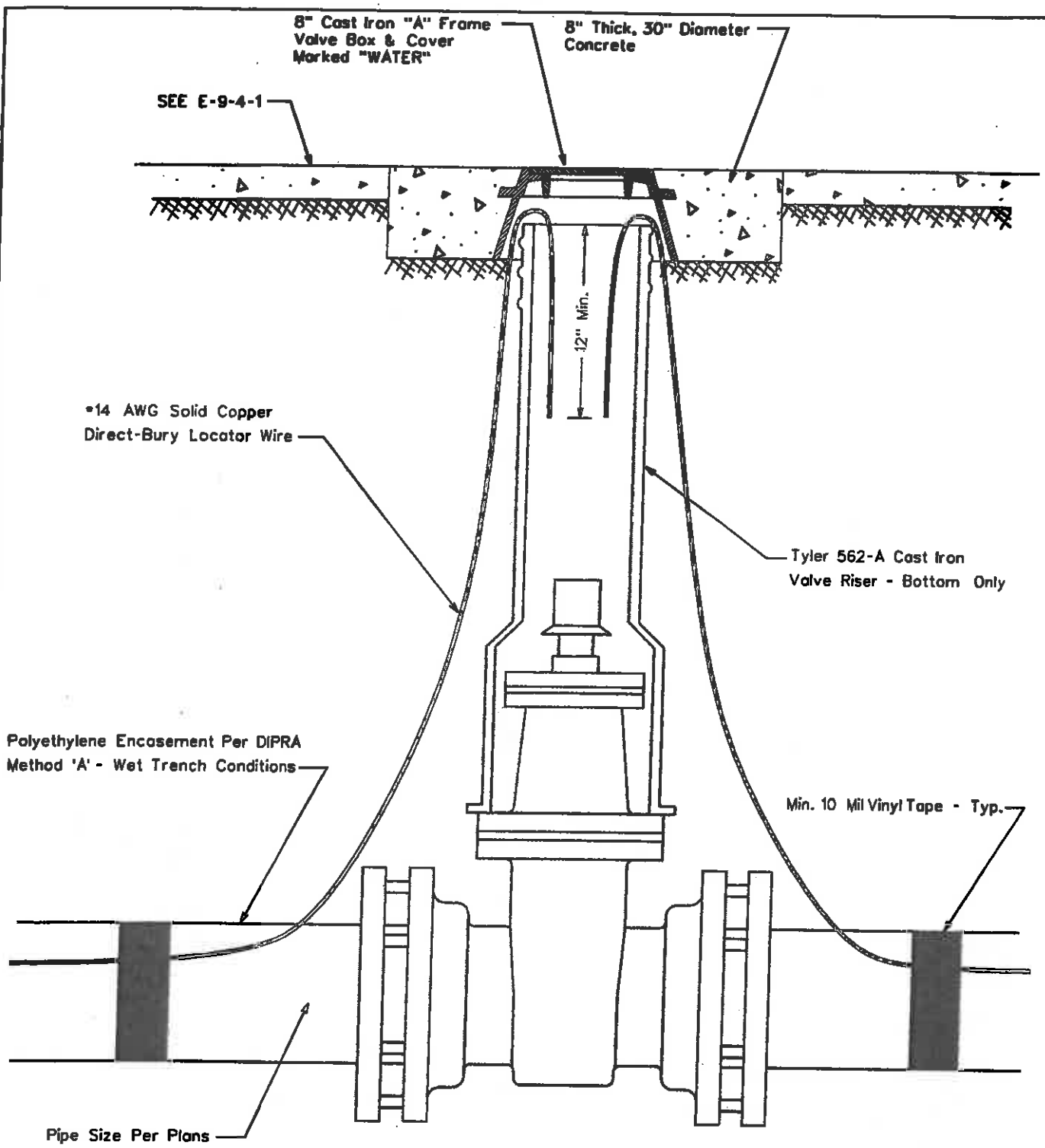

ARIZONA WATER COMPANY

STANDARD SPECIFICATION FOR THE INSTALLATION OF				
LOCATOR WIRE TERMINATION				
DRAWN BY: CB	APPROVED BY:	DATE: 09.27.2006	△	E-9-28-2

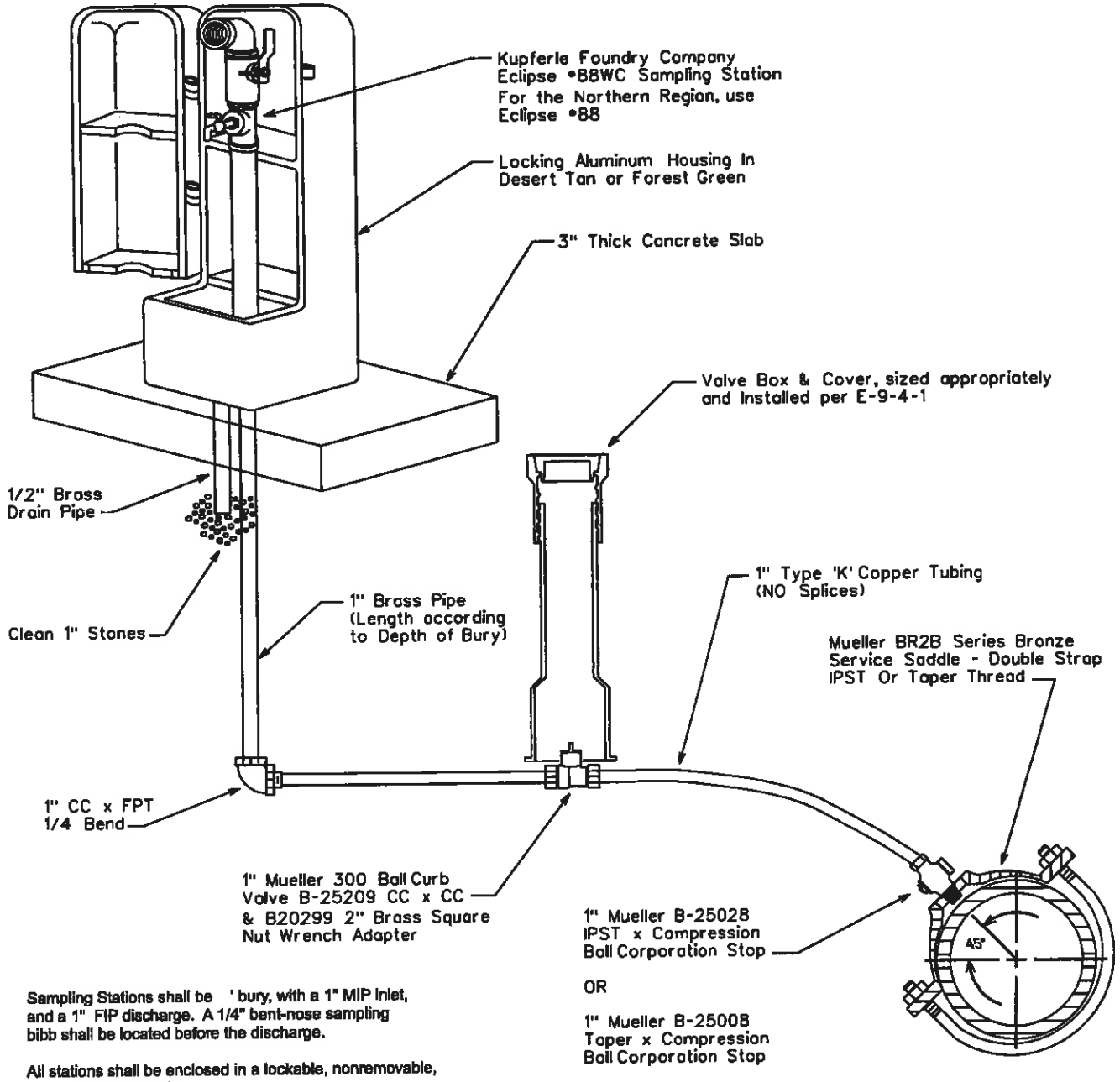

Sampling Stations shall be ' bury, with a 1" MIP inlet, and a 1" FIP discharge. A 1/4" bent-nose sampling bibb shall be located before the discharge.

All stations shall be enclosed in a lockable, nonremovable, aluminum-cast housing.

When opened, the station shall require no key for operation, and the water will flow in an all brass waterway.

All working parts will be of brass and serviceable from above ground with no digging. (OPTIONAL: If desired, a 1/2" brass drain tube will be provided within the locking cover).

A 1" ball valve will control the water flow, and be located before (or after) the sampling bibb, as manufactured by Kupferle Foundry, St. Louis, MO 63102.

SADDLE TAP TO CA, PVC, OR DI PIPE

NOTE: The minimum distance between taps on mains other than ductile iron is 12"

Pipe Depth Per
E-8-1-2, Item 3.

ARIZONA WATER COMPANY

STANDARD SPECIFICATION FOR THE INSTALLATION OF SAMPLING STATION				
DRAWN BY: CB	APPROVED BY: MW	DATE: 01.24.2007	△	E-9-29-1

ENCASEMENT FOR PIPE CROSSING

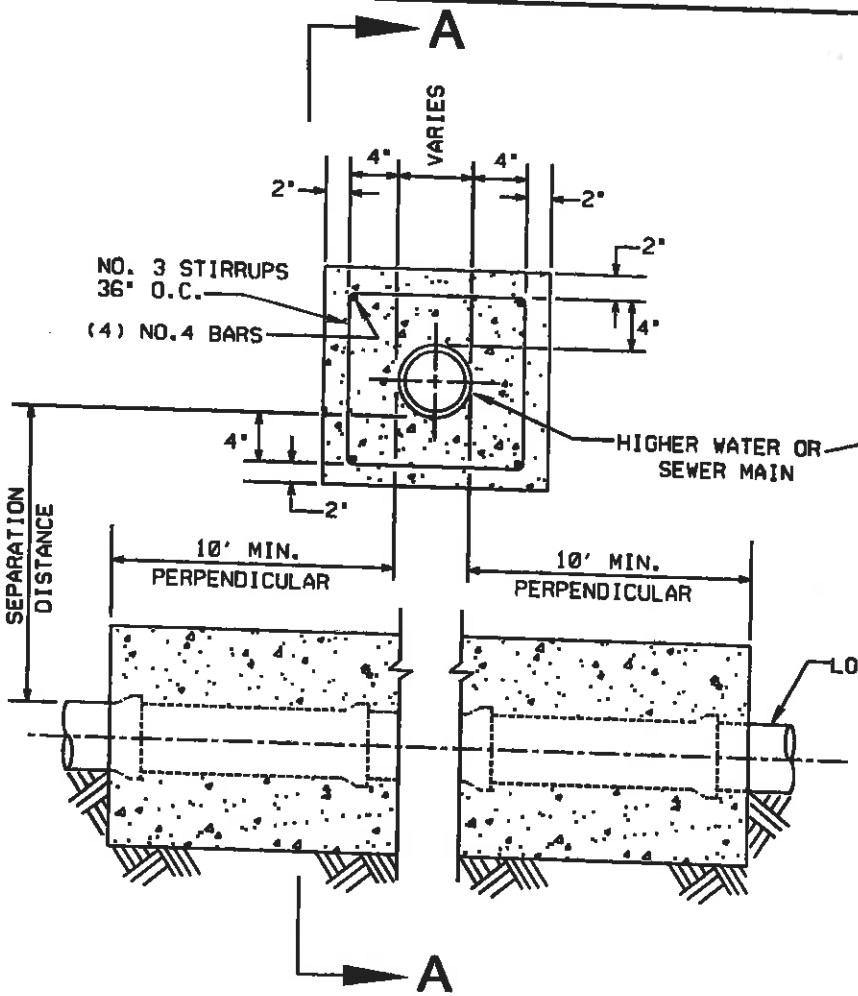

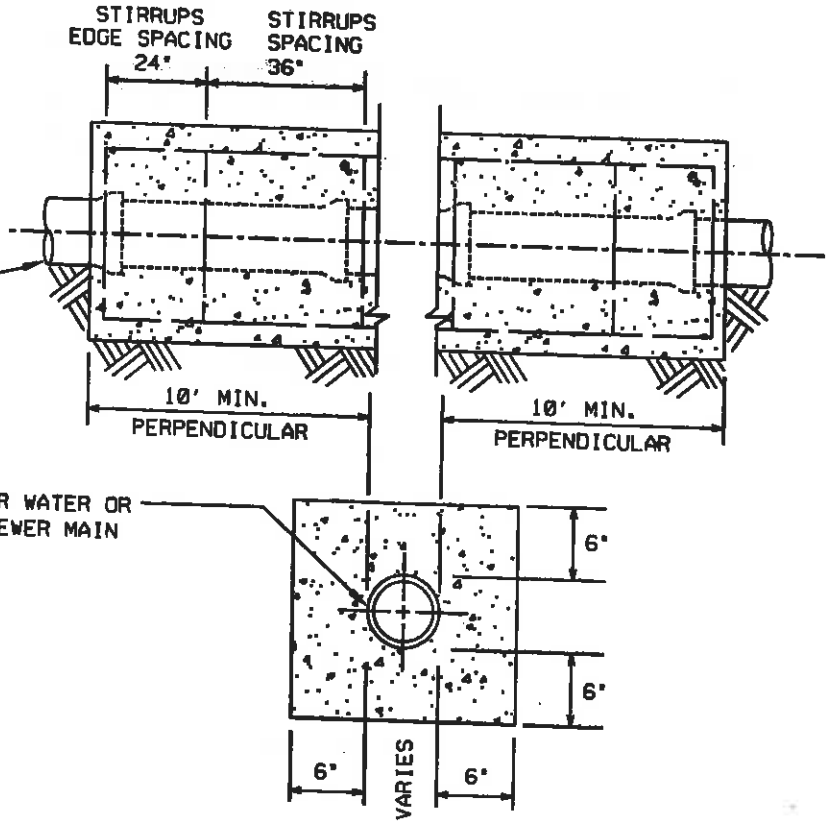

SECTION A-A

NOTES:

1. 2,000 PSI CONCRETE
2. SEPARATION DISTANCES AND/OR OTHER EXTRA PROTECTION SHALL BE REQUIRED TO PROTECT WATER MAINS FROM CONTAMINATION BY SANITARY SEWER MAINS. SEE AWC STANDARD SPECIFICATION PAGES E-8-1-9 AND E-8-1-10.
3. SEE CROSS SECTION DETAIL FOR LIMITS OF SEPARATION/EXTRA PROTECTION. ALL DISTANCES ARE MEASURED PERPENDICULARLY FROM THE OUTSIDE OF THE PIPES.
4. RECLAIMED WATER SHALL BE CONSIDERED A SANITARY SEWER WHEN PLACED NEXT TO A POTABLE WATER MAIN.

ARIZONA WATER COMPANY

STANDARD SPECIFICATION
FOR THE INSTALLATION OF
WATER AND SANITARY SEWER
SEPARATION/PROTECTION

DRAWN BY:	APPROVED BY:	DATE:	△	
CB	JW	04.07.2008		E-9-30-1

NOTES:

1. 2,000 PSI CONCRETE

2. SEPARATION DISTANCES AND/OR OTHER EXTRA PROTECTION SHALL BE REQUIRED TO PROTECT WATER MAINS FROM CONTAMINATION BY SANITARY SEWER MAINS. SEE AWC STANDARD SPECIFICATION PAGES E-8-1-9 AND E-8-1-10.

3. SEE CROSS SECTION DETAIL FOR LIMITS OF SEPARATION/EXTRA PROTECTION. ALL DISTANCES ARE MEASURED PERPENDICULARLY FROM THE OUTSIDE OF THE PIPES.

4. RECLAIMED WATER SHALL BE CONSIDERED A SANITARY SEWER WHEN PLACED NEXT TO A POTABLE WATER MAIN.

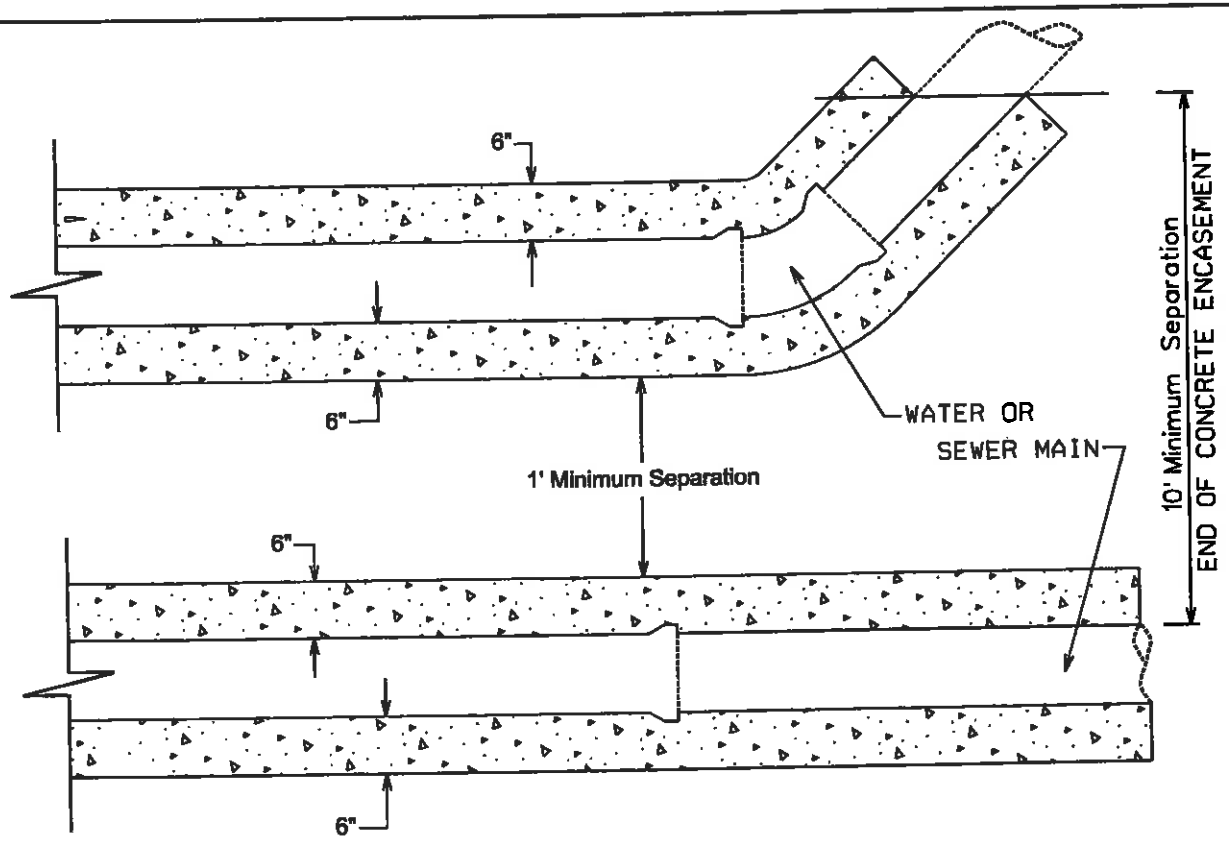

PLAN VIEW

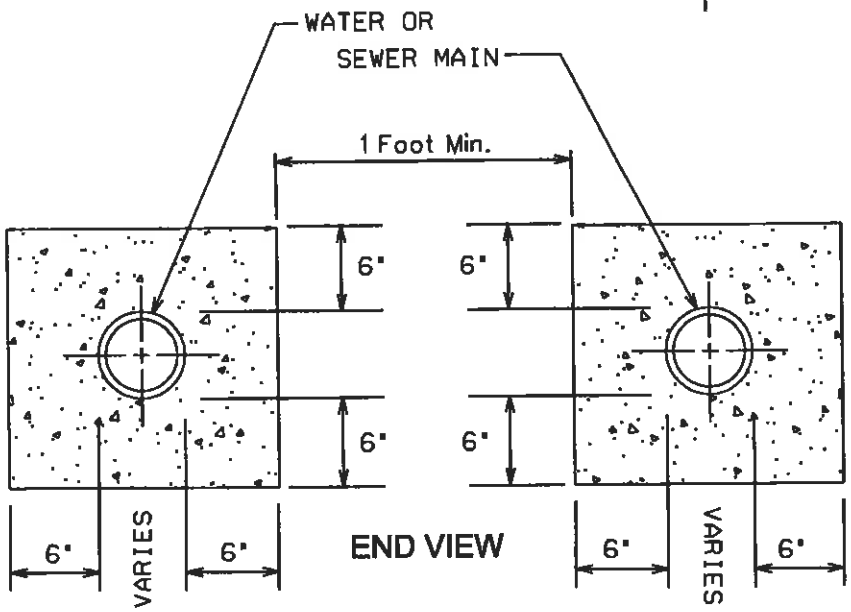

END VIEW

ENCASEMENT FOR PARALLEL PIPES

ARIZONA WATER COMPANY

STANDARD SPECIFICATION
FOR THE INSTALLATION OF
WATER AND SANITARY SEWER SEPARATION/PROTECTION

DRAWN BY:	APPROVED BY:	DATE:		
CB	JW	04.07.2008	△	E-9-30-2

AMENDMENT #1

JCG TECHNOLOGIES

July 10, 2012

Gila County Superior Court
CIS Department
1400 E. Ash Street, 3rd Floor
Globe, AZ 85501

Attention Eloise Price

Ellie,

Per my voice mail,

Can you OK the following via return email. We will go ahead and invoice you following the installation.

JCG to:

Supply and install a Mid Atlantic 8 Space Audio Rack with Door and Power
Rewire courtroom audio
Wire, Connect, and Test components in the rack

Price: Includes all travel and installation charges:	$1,630.00
Discount:	(326.00)
Sub Total	$1,304.00
Tax	41.80
Shipping – 2 day	175.00
TOTAL	**$1,520.80**

Sincerely,

President

JCG

9941 East Mission Lane
Scottsdale, Arizona 85258

Phone	480-661-5629
Fax	480 661-7589
Mobile	602 418-5307
EMail	srschmenk@jcgtechnologies.com
Web	www.jcgtechnologies.com

GILA COUNTY

Don E. McDaniel, Jr., County Manager

Date: 7/11/12

JCG Technologies, Inc Business Disclaimer
This message may contain confidential, proprietary or legally privileged information. In case you are not the original intended recipient of the message, you must not, directly or indirectly, use, disclose, distribute, print, or copy any part of this message and you are requested to delete it and inform the sender. Any views expressed in this message are those of the individual sender unless otherwise stated. Nothing contained in this message shall be construed as an offer or acceptance of any offer by JCG Technologies, Inc unless sent with that express intent and with due authority of JCG. JCG has taken enough precautions to prevent the spread of viruses. However the company accepts no liability for any damage caused by any virus transmitted by this email.

Arizona Commercial Plumbing, Inc. dba Payson Plumbing

ROC22001/ROC222000

Change Order

Project: Gila County Health Department
107 W. Frontier
Payson, AZ 85541

Change Order No: 1

Date: 7/6/2012

To: Gila County
1400 E. Ash Street
Globe, AZ 85501

Contract For: $ 844.85

Contract: 060712

Purchase Order: 2012-00000819

The Contract is changed as follows: Extra excavation due to electrical, water and sewer in same ditch & added 2 way cleanout

$ 658.32

The Original Contract Sum:	$	844.85
Net Change by previously authorized Change Order:	$	-
The Contract Sum prior to this Change Order was:	$	844.85
The Contract Sum will be increased by this Change Order in the amount of:	$	658.32
New Contract Sum including this Change Order will be:	$	1,503.17
The Contract time will be Changed by:	None	

The date of Substantial Completion as of the date of this Change Order therefore is:

Approvals

AZ Commercial Plumbing, Inc. dba Payson Plumbing

Signature

Jeff Ashby President
Printed Name and Title

7-9-12
Date

Gila County

Signature

Don E. McDaniel., Jr. County Manager
Printed Name & Title

7/11/12
Date

June 13, 2012

Malissa Buzan
Community Action Program Gila County
5515 South Apache Ave
Globe, AZ 85501-4430

Re: APS Agency Guarantee Extranet Agreement

Dear Malissa Buzan:

Thank you for using the APS Electronic Agency Guarantee (EAG) system. Our Extranet Agreement needs to be updated on an annual basis; therefore, enclosed please find two copies of the Agreement, including Exhibits B and C.

- Please have your agency's Designated Access Administrator review and sign both copies of the Agreement, keep one for your files and return one to us at the above address.

- Exhibit B should be signed by the Designated Access Administrator and all Authorized Users and returned to us as well.

- Exhibit C is the APS Customer Consent Form. Prior to accessing a customer's account on the APS Extranet to determine their eligibility for agency assistance, your Agency is <u>required</u> to have the APS customer of record complete and sign a new Consent Form authorizing you to do so. For auditing purposes, your Agency must then retain these signed documents for a minimum of one year.

- To ensure compliance regarding the privacy of our customers' data, your Agency is required to allow APS reasonable access to conduct quarterly unannounced on-site evaluations to ensure the following:
    - Customer Consent Forms are properly administered and secured.
    - The Designated Access Administrator and Authorized Users remain active representatives of your Agency.

Please feel free to contact me at 602 371 7604 or 800 253 9405 and ask for extension 6774 if you have any questions or comments regarding this Agreement or the use of our Extranet site.

Sincerely,

Cathy Chiang
Customer Assistance Programs Support
Enclosures: APS Extranet Agreement
Exhibit B
Exhibit C

APS Extranet Agreement

Arizona Public Service Company ("APS") is pleased to offer Community Action Program Gila County ("Agency"), a non-profit organization organized under the laws of the state of Arizona, access to APS' Extranet to provide a pay guarantee service to APS customers, subject to Agency's acceptance of the terms and conditions set forth in this Agreement effective07/01/2012 ("Effective Date"). As you are aware, APS offers restricted, password-protected access to certain information and services to qualified entities, through its Internet website, located at aps.com ("Site). This enhanced information and services area on the Site is known as APS's Extranet (the "Extranet"). This agreement supersedes all prior agreements between the parties regarding the Extranet .

Designated Access Administrator, Authorized Users and Agency Guarantee.

Upon receipt of signed Agreement and Exhibit B, APS will activate and deliver to the "Designated Access Administrator" a Login Name and Password that allow access to the Agency Guarantee Area on the Extranet. In this area, Agency will be able to view certain information of APS customers who have requested Agency to guarantee their customer payment to APS.

Once the Agency has posted an approval of payment on the Extranet for an APS customer, Agency will be deemed to have guaranteed payment of that customer's account and be responsible for the amount indicated unless, **within ten (10) working days of having made the guarantee,** Agency notifies APS in writing (email is acceptable) that the guarantee is reversed. Upon receipt of such written notification, the customer will be held responsible for any payment due.

Payment for the guarantee **must be received** by APS within **ninety (90) days** of received guarantee. If payment is not received, the customer's account will be debited for the outstanding balance.

Agency will pay the guarantees by way of check either from Agency funds or from other funding sources directly. Agency will indicate the funding source for each guarantee. When paying by check, the bank account will be debited upon receipt of the check by APS. If the transaction is returned by the financial institution for any reason, return check charges may apply. APS will seek restitution for the return check charges and amount of check from the maker of the check.

The Designated Access Administrator shall be an individual whom Agency would entrust with its own confidential or otherwise sensitive information, and of whom the Agency would have no reason to question its trust or confidence in that person's honesty, trustworthiness, and propensity for legal and ethical compliance. Each year, as well as each time that Agency changes its Designated Access Administrator and/or Authorized User, Agency shall complete a Designated Access Administrator and Authorized User Acknowledgment Agreement, attached as Exhibit B as described below, and submit it to APS. If Agency has not submitted a Designated Access Administrator and Authorized User Acknowledgment Agreement within fifteen (15) days of any change of Designated Access Administrator or any letter or email request from APS for

such information, APS may, without further notice, terminate this Agreement and/or Agency's access to the Extranet for any or all functions.

Using the Master Account, Agency Designated Access Administrator may identify additional Authorized Users for its department to access the Agency Guarantee Area on the Extranet. The Administrator will be able to issue a user identification, password and one of four levels of access to the Agency employees who have been authorized by Agency to perform functions on the Extranet. Besides the Administrator level, which shall have access to the Extranet functions and information as set forth in the attached Exhibit A, the four other levels of access are View & Make Guarantees, View Submit/Cancel Payment Requests, Authorize/Cancel Payment Requests, and Run & View Reports. APS will periodically require Agency to verify the names of the Agency individuals who have been provided access to the Extranet, and confirm they are an active representative with the Agency. If APS has not received written acknowledgement from the Agency within fifteen (15) days of the letter/email requesting such verification and confirmation, APS may, without further notice, terminate this Agreement and/or Agency's access to the Extranet for any or all functions.

A list of data fields that may be accessed or entered at each of the five (5) authorization levels is set forth in the attached Exhibit A. Agency Designated Access Administrator shall not grant a level of access in excess of that needed for the authorized employee to perform the functions applicable to that employee's role in the payment guarantee process. Agency shall be responsible for all access, use and misuse of the information available to its employees and representatives through the Extranet. Agency employees and representatives shall not share Login Names and/or Passwords, and APS may terminate this Agreement for any such sharing.

The Agency's Designated Access Administrator, and each of its Authorized Users agree to access and use the Extranet solely for this Agency, and solely for the internal business purposes of guaranteeing, authorizing and paying APS customer accounts for this Agency. Before being granted a Login Name and Password or accessing any APS customer information, the Designated Access Administrator and each of the Authorized Users shall sign the Acknowledgement form attached hereto as Exhibit B. Agency shall provide a copy of such forms to APS within fifteen (15) days of completion of the form, and retain the signed originals of these forms in its file for at least one (1) year after the termination of that employee or representative from the Agency. From time to time, and upon the request of APS, Agency shall produce the original, signed documents within thirty (30) days and provide any additional copies requested by APS.

APS Customer Authorization.

Prior to viewing any APS customer information, Agency must first obtain a written authorization from the applicable APS customer consenting to Agency employees or representatives having access to view that customer's APS account information. That written authorization shall contain language substantially similar to that set forth in the attached Exhibit C, and be valid for one occasion of reviewing and qualifying that customer's account for payment. Agency shall submit an example of its customer authorization form for APS's approval prior to accessing the Extranet.

Agency must keep all original signed customer authorization forms on file for a period of one year after the date Agency last accessed the APS customer's information. From time to time, and upon the request of APS, Agency will produce the original, signed documents within thirty

(30) days and provide any copies requested by APS. The records must be contained in a 'locked' file or 'locked room' with limited access.

APS may conduct unannounced on-site evaluations quarterly to ensure forms are properly administered and secured, and the identified Administrators and Authorized Users remain active representatives of the Agency. Agency shall cooperate and provide APS reasonable access to perform these evaluations.

Confidentiality.

All APS customer information to which Agency Authorized Users have access, such as account number, payment history, address, phone numbers, and any other customer information, is strictly confidential and shall not be disclosed to third parties nor used for anything other than the intended purpose of qualifying and authorizing payment on the applicable customer's account.

Agency will protect from unauthorized use or disclosure the Login Name and Password for the Designated Access Administrator and each of its Authorized Users to the same extent that Agency protects its other computer access codes to sensitive or confidential information, which shall be no less than reasonable care.

Agency shall promptly disable, as applicable, the Designated Access Administrator's or Authorized User's Login Name and Password, and notify APS as soon as possible, but no later than ten (10) business days, in the event of any of the following: (a) the Designated Access Administrator or Authorized User is no longer employed by or represents the Agency, (b) the Designated Access Administrator or Authorized User no longer requires access to the Extranet, or (c) there is any indication to Agency that the Designated Access Administrator or an Authorized User has not or may not abide by its confidentiality obligations, or Agency otherwise questions that person's honesty, trustworthiness, or propensity for legal and ethical compliance. Agency further agrees to cooperate in reviewing and confirming in writing the list of Authorized Users, from time to time, upon the request of APS.

Agency shall immediately notify APS of any breach of electronic or physical security mechanisms employed by APS or Agency to protect APS customer information, or any theft or unauthorized use of APS customer information of which it becomes aware. Agency shall fully cooperate with APS in providing any notifications to APS customers, agencies and third parties identified by APS, of such security breach, theft or unauthorized use.

The automated and manual processes by and through which Agency guarantees the payments of APS customers, which shall include the Extranet and its functions, algorithms, sequence, structure, organization, user interface, software and documentation, are or include trade secrets of APS. Agency shall maintain the secrecy and confidentiality of any such trade secrets which Agency learns through its use of the Extranet or its guaranteeing of APS customer payments. The confidentiality obligation pertaining to such trade secrets shall not extend to a trade secret that (i) is or becomes (through no fault of the Agency) generally available to the public, (ii) was in Agency possession or known by it without restriction imposed by APS prior to its access or use, (iii) was rightfully disclosed to Agency by a third party not under restriction of

confidentiality with respect to such trade secret, (iv) was independently developed by employees of Agency(other than employees who have been granted access to APS' trade secrets) without use of or reference to any trade secret of APS; or (v) the disclosure of which is required by law.

Other Agreements

By allowing its employees/representatives to access the Extranet, Agency agrees that all of the terms and conditions contained in the Terms of Use and Privacy Policy agreements posted on the Site, as amended by APS from time to time, shall be incorporated by reference and made a part of this Agreement. Before designating any employee or representative as an Authorized User, Agency agrees to inform each of its Authorized Users that their use of the Extranet is subject to the terms and conditions of this Agreement and the above referenced agreements. Agency is responsible for the conduct of its Designated Access Administrator and each of its Authorized Users while using the Extranet, and for any consequences if such persons misuse the Extranet or violate such terms and conditions.

In addition to the other provisions in our Privacy Policy agreement posted on our website, we ask that you particularly note that, although we use industry-standard technologies when electronically transferring and receiving customer information directly through our website, information transmitted via email is generally not secure or encrypted unless specific measures are taken to separately encrypt the information. Also, it may be possible for an unauthorized person to gain access to your information notwithstanding our use of security measures. Therefore, please note that Agency enters information on our website and communicates via email at its own risk.

Agency represents and warrants that it has procedures and measures in place to identify any red flags of identity theft and to respond appropriately to prevent or mitigate identity theft of APS customers that are existing or potential Agency clients. APS (directly or through third party auditors) shall have the right, during Agency's normal hours of operation, to review or audit Agency in regards to security measures employed by Agency to protect APS customer information and Agency shall cooperate with APS and its auditors in regards to such review or audit.

Agency shall not transmit APS customer account numbers or Social Security numbers through email unless that information is encrypted.

If there is a conflict between the terms and conditions of the Terms of Use and Privacy Policy agreements and this Agreement, this Agreement shall control.

Indemnification

Agency agrees to indemnify, defend, and hold harmless APS, and its officers, directors, employees, agents, advisers, representatives, affiliates, successors, and assigns (collectively "APS Indemnities") from and against any and all claims, demands, losses, liability, costs, or expenses (including reasonable attorney's fees) (hereinafter collectively referred to as "Claims") arising out of bodily injury of any person (including death) or property damage, including damages arising from or related to the loss, theft, disclosure or misuse of APS customer information, but only to the extent that such Claims arise out of or result from Agency's breach of this Agreement or the act, omission, negligence, misconduct, or other fault of the Agency, its officers, officials, agents, employees, representatives or volunteers.

Insurance

Agency represents that it will maintain appropriate insurance or self-insurance coverage at all times, and upon the signing of this Agreement, and at any subsequent time upon the request by APS, Agency shall provide to APS a copy of a certificate or certificates of insurance showing current and in force worker's compensation and employer liability coverage in no less than the applicable statutory limits, and general liability coverage in amounts not less than $1,000,000.00, and providing notice to APS, no less than thirty (30) days prior to any cancellation. Except for Workers' Compensation insurance, all the policies required of this Agreement shall name APS and APS Indemnitees as additional insureds. The policies shall stipulate that the insurance shall be primary insurance and that any insurance carried by APS or any APS Indemnitee shall not be contributory insurance.

Termination

Either party may terminate the contract, in whole or in part, upon thirty (30) days written notice to the other, specifying the effective date. Notwithstanding the foregoing, APS may immediately take any action it reasonably determines is necessary to conduct its operations in an efficient, safe, and secure manner, including terminating or suspending Agency access to the Extranet or APS customer information, or any other measures related to efficient business operation, safety or security.

Each party acknowledges that the unauthorized disclosure or use of any APS customer or trade secret confidential information may cause irreparable harm and significant injury that may be difficult to ascertain. Agency therefore agrees that specific performance or injunctive relief, in addition to other legal and equitable relief, are appropriate remedies for any actual or threatened violation or breach of this Agreement.

Any provision of this Agreement that imposes or contemplates continuing obligations on a party shall survive the expiration, cancellation or termination of this Agreement, including but not limited to those guarantees of APS customer payments made by Agency prior to such expiration, cancellation or termination, and those obligations under the Confidentiality and Indemnification sections.

Miscellaneous

Agency may not assign its rights or delegate its duties under this Agreement without the prior written consent of APS. Any assignment or delegation by Agency in breach of this Section shall be null and void and of no legal force or effect, Agency shall be responsible and liable for any and all guarantees granted, or acts or omissions performed by, any party to whom Agency does, or attempts to, delegate, contract or assign rights or duties under this Agreement.

If any provision of this Agreement is held to be invalid, void, or unenforceable by any court of competent jurisdiction, that holding shall not affect the validity or enforceability of the remaining provisions of this Agreement.

This Agreement, including any other agreements referenced and incorporated herein, constitutes the final and complete agreement between the parties concerning its subject matter and supersedes all prior agreements and conduct, whether written or oral. This Agreement shall be governed by and interpreted under the laws of Arizona, without giving effect to the doctrine of conflict of laws. This Agreement shall only be amended in a writing signed by both parties; any purported oral modification of this Agreement shall be void and of no effect whatsoever.

To indicate your agreement to the above terms and conditions, and to obtain access to the Extranet on our Internet website, please countersign in the space provided below, and return one copy of this Agreement, a copy of a completed Exhibit B signed by Agency Designated Access Administrator and an example of your Agency customer consent form.

Agreed to and accepted:

Agency GILA COUNTY

By: _____

Print: Don E. McDaniel, Jr.

Title: Gila County Manager

Date: 7/11/12

Exhibit A
Electronic Agency Guarantee
Views and Data

Through an Administrator section, the Agencies can add users and assign different levels of access. Five Security accesses are available and allow the user to perform the following functions:

1) View & Make Guarantees
2) View Submit/Cancel Payment Requests
3) Authorize/Cancel Payments Requests
4) Run & View Reports
5) Administrator Functions

NOTE: The function of Administrator has access to all functions and information for their Agency. The other functions provide access to data as follows:

View & Make Guarantees Access
(Data available only for guarantees submitted by that agent)

1) View Guarantees Function (all items display only)
   - Customer Account number
   - Customer Name
   - Guarantee Amount
   - Guarantee Type (Standard or Deposit Account)
   - User ID
   - Guarantee Date

2) View Guarantees Detail (all items display only)
   - Service Address
   - Service Status
   - Medical Monitoring indicator (On or Off)
   - Customer Account number
   - Total amount due
   - Delinquent amount
   - Pending payments (aps.com only)
   - Pending Guarantees
   - Total of payments and guarantees
   - Total remaining delinquent amount (Delinquent Amount less payments and guarantees)
   - Guaranteed amount for the specific guarantee selected
   - Name of the person making the Guarantee

3) Make Guarantee Search Function (enterable fields for validation)
   - Customer Last Name
   - Customer Account Number
   - Street Number

4) Make Guarantee Detail
   - Service Address (display)
   - Service Status (display)
   - Medical Monitoring indicator - On or Off (display)
   - Customer or Deposit Account number (display)
   - Unpaid Deposit or Total amount due (display)
   - Delinquent amount (display)
   - Pending payments (aps.com only) (display)
   - Pending Guarantees (display)
   - Total of payments and guarantees (display)
   - Total remaining Deposit or Delinquent amount (Delinquent Amount less payments and guarantees) (display)
   - Deposit Guarantee Type (deposits only) - Monetary, URRD, Non-monetary (radio button selection)
   - Amount of Guarantee (enterable)
   - Name of the person making the Guarantee (radio button selection or enterable)
   - Id of the person making the Guarantee – (radio button selection or enterable)
     - Customer Name (display)
     - Name (enterable)
     - ID (enterable)

4) Cancel Guarantee (all items display only). This function is only available to APS associates.
   - Customer Account number
   - Customer Name
   - Guarantee Amount
   - Guarantee Type (Standard or Deposit Account)
   - User ID
   - Guarantee Date
   - Cancel (selectable)

View Submit/Cancel Payment Requests Access

1) View/Edit Payment Accounts
   - Payment Account number (display)
   - Account Name (display)
   - Account Number (display)
   - Routing Number (display)
   - Account Type (display)
   - Edit (selectable)
   - Delete (selectable)

2) Add/Edit Payment Account
   - Agency Name (display)
   - Bank Name (enterable)
   - Account Type – Checking or Savings (radio button selection)
   - Bank Routing number (enterable)
   - Bank Account number (enterable)

3) Submit Payment Request
   - Customer Account number (display)
   - Customer Name (display)
   - Guarantee Amount (display)
   - Amount Owed (display)
   - Guarantee Type (Standard or Deposit Account) (display)
   - User ID (display)
   - Guarantee Date (display)
   - Selectable (check box)

Authorize/Cancel Payment Request Access

1) Authorize Payment Request
   - Select Payment Account (selectable drop-down list)
   - User ID (display)
   - Total (display)
   - Request Date (display)
   - Selectable (check box)
   - Payment Details (selectable)
   - Delete (selectable)

2) Scheduled Payment Details
   - User ID – user that created the payment request (display)
   - Request Submitted – date (display)
   - Total – amount of request (display)
   - Customer Account number (selectable to view guarantee)
   - Customer Name (display)
   - Guarantee Amount (display)
   - Amount Owed (display)
   - Guarantee Type (Standard or Deposit Account) (display)
   - User ID – user that made the guarantee (display)
   - Guarantee Date (display)

Run & View Reports

1) Guarantees report has five (5) sections
   - A header section that lists the Agency, date (display)
   - A search section that would allow the agency to select what is shown on the report (enterable)
   - Unpaid guarantees section (display)
   - Paid guarantees section (display)
   - Unclaimed non-monetary guarantees section (display)

2) Payments report has four (4) sections
   - A header section that lists the Agency, date (display)
   - A search section that would allow the agency to select what is shown on the report (enterable)
   - Pending payments section (display)
   - Posted payments section (display)

3) Non-monetary Guarantees report has two (2) sections
   - A header section that lists the Agency, date (display)
   - Non-monetary guarantees claims section (display)

4) Guarantee Report: (Option to view paid or unpaid Guarantees) (display only)
   - Heading: Agency Name & Date
   - Date and time the Guarantee was made
   - Customer Name that was chosen or provided when the Guarantee was made
   - Customer Account Number.
   - CA Type
   - Guarantee amount
   - Agency's associate login id[/name]

5) Payment Report: (display only)
   - Heading: Agency Name & Date
   - Date and time the payment was made
   - Customer Account Number the payment was made to
   - Amount of payment
   - Agency's associate login id/[name]
   - If they payment was electronic or paper

6) Non-Monetary Claim Report: (display only)
   - Heading: Agency Name & Date
   - Date and time the claim was submitted
   - Customer Account Number the claim was made on
   - Amount of Claim
   - APS's CSR log-in ID
   - Status of the Claim, Paid – yes or no

APS Extranet Agreement

Administrator Functions

1) Add & Update User information
    - User ID – pre-assigned (display)
    - Password - pre-assigned (secured – asterisks only)
    - First Name (enterable)
    - Last Name (enterable)
    - Access Level (check box)
        - View Guarantee (pre-selected)
        - Make Guarantees
        - Submit Payment Requests
        - Run/View Reports
        - Authorize Payment / Bank Account Set-up

2) Add Admin User
    - User ID – pre-assigned (display)
    - Password - pre-assigned (secured – asterisks only)
    - First Name (enterable)
    - Last Name (enterable)
    - Email address (enterable)

3) Edit/Delete Users
    - Name – First and Last (display)
    - Access – Administrator or User (display)
    - User ID (display)
    - Edit (selectable)
    - Delete (selectable)
    - Search page (enterable)

4) Edit User
    - User ID – pre-assigned (display)
    - Password - reset (selectable)
    - First Name (display)
    - Last Name (display)
    - Access Level (check box)
        - View Guarantee (pre-selected)
        - Make Guarantees
        - Submit Payment Requests
        - Run/View Reports
        - Authorize Payment / Bank Account Set-up

aps

APS Extranet Agreement

Exhibit B

Designated Access Administrator and Authorized User Acknowledgement

I, Malissa Buzan, am an employee or representative of Community Action Program Gila County ("Agency"). Agency has designated me as one of its authorized agents to process guarantees by Agency of APS customer payments on the APS Agency Guarantee Extranet ("Extranet"). Pursuant to my authorization, I hereby acknowledge and agree to the following:

1. That the password that I receive to access the Extranet, and the APS customer information to which I may have access are strictly confidential and are to be treated as such. I further agree (a) not to disclose such information to any third parties, and (b) to only disclose such information to those Agency employees who are authorized to access the Extranet and who have a need to know the information in regards to processing an APS customer payment guarantee.

2. That I will not access any information or conduct any transactions on the Extranet using another person's password. I will log off the Extranet during absences to prevent any unauthorized or improper use.

3. That I will only access APS customer information for those APS customers who have first provided Agency a signed document in which the APS customer consents to the Agency accessing that APS customer's information.

4. That I will use the Extranet and its information only for purposes related to providing financial assistance to APS customers or guaranteeing an APS customer's payment. I further agree that I will not do any of the following (a) falsify any information I input into the Extranet, (b) use the Extranet or its information for any personal use or gain, or (c) conduct any transactions involving my own APS customer account.

5. I understand that my use of the Extranet may be monitored by Agency and APS, and any unauthorized access or misuse of the Extranet or APS customer information may be reported to the appropriate legal authorities for prosecution.

6. I further understand that the automated and manual processes by and through which Agency guarantees the payments of APS customers, which shall include the Extranet and its functions, algorithms, sequence, structure, organization, user interface, software and documentation, are or include trade secrets of APS. I agree to maintain the secrecy and confidentiality of any such trade secrets which I learn through my use of the Extranet or guaranteeing of APS customer payments.

7. Agency shall not transmit APS customer account numbers, financial account or Social Security numbers through email unless that information is encrypted.

DATED this 29 of June 2012.

Signature: [signature]

Name: Malissa Buzan Title: CAP Housing Manager

aps

APS Extranet Agreement

Exhibit B
Designated Access Administrator and Authorized User Acknowledgement

I, Dorine Prine, am an employee or representative of Community Action Program Gila County ("Agency"). Agency has designated me as one of its authorized agents to process guarantees by Agency of APS customer payments on the APS Agency Guarantee Extranet ("Extranet"). Pursuant to my authorization, I hereby acknowledge and agree to the following:

1. That the password that I receive to access the Extranet, and the APS customer information to which I may have access are strictly confidential and are to be treated as such. I further agree (a) not to disclose such information to any third parties, and (b) to only disclose such information to those Agency employees who are authorized to access the Extranet and who have a need to know the information in regards to processing an APS customer payment guarantee.

2. That I will not access any information or conduct any transactions on the Extranet using another person's password. I will log off the Extranet during absences to prevent any unauthorized or improper use.

3. That I will only access APS customer information for those APS customers who have first provided Agency a signed document in which the APS customer consents to the Agency accessing that APS customer's information.

4. That I will use the Extranet and its information only for purposes related to providing financial assistance to APS customers or guaranteeing an APS customer's payment. I further agree that I will not do any of the following (a) falsify any information I input into the Extranet, (b) use the Extranet or its information for any personal use or gain, or (c) conduct any transactions involving my own APS customer account.

5. I understand that my use of the Extranet may be monitored by Agency and APS, and any unauthorized access or misuse of the Extranet or APS customer information may be reported to the appropriate legal authorities for prosecution.

6. I further understand that the automated and manual processes by and through which Agency guarantees the payments of APS customers, which shall include the Extranet and its functions, algorithms, sequence, structure, organization, user interface, software and documentation, are or include trade secrets of APS. I agree to maintain the secrecy and confidentiality of any such trade secrets which I learn through my use of the Extranet or guaranteeing of APS customer payments.

7. Agency shall not transmit APS customer account numbers, financial account or Social Security numbers through email unless that information is encrypted.

DATED this 18th of June 2012

Signature: Dorine Prine

Name: Dorine Prine Title: Case Manager

aps

APS Extranet Agreement

Exhibit B
Designated Access Administrator and Authorized User Acknowledgement

I, DENISE J. DICKISON, am an employee or representative of Community Action Program Gila County ("Agency"). Agency has designated me as one of its authorized agents to process guarantees by Agency of APS customer payments on the APS Agency Guarantee Extranet ("Extranet"). Pursuant to my authorization, I hereby acknowledge and agree to the following:

1. That the password that I receive to access the Extranet, and the APS customer information to which I may have access are strictly confidential and are to be treated as such. I further agree (a) not to disclose such information to any third parties, and (b) to only disclose such information to those Agency employees who are authorized to access the Extranet and who have a need to know the information in regards to processing an APS customer payment guarantee.

2. That I will not access any information or conduct any transactions on the Extranet using another person's password. I will log off the Extranet during absences to prevent any unauthorized or improper use.

3. That I will only access APS customer information for those APS customers who have first provided Agency a signed document in which the APS customer consents to the Agency accessing that APS customer's information.

4. That I will use the Extranet and its information only for purposes related to providing financial assistance to APS customers or guaranteeing an APS customer's payment. I further agree that I will not do any of the following (a) falsify any information I input into the Extranet, (b) use the Extranet or its information for any personal use or gain, or (c) conduct any transactions involving my own APS customer account.

5. I understand that my use of the Extranet may be monitored by Agency and APS, and any unauthorized access or misuse of the Extranet or APS customer information may be reported to the appropriate legal authorities for prosecution.

6. I further understand that the automated and manual processes by and through which Agency guarantees the payments of APS customers, which shall include the Extranet and its functions, algorithms, sequence, structure, organization, user interface, software and documentation, are or include trade secrets of APS. I agree to maintain the secrecy and confidentiality of any such trade secrets which I learn through my use of the Extranet or guaranteeing of APS customer payments.

7. Agency shall not transmit APS customer account numbers, financial account or Social Security numbers through email unless that information is encrypted.

DATED this 28th of June 2012.

Signature: Denise J Dickison

Name: DENISE J. DICKISON Title: Admin Asst

aps

APS Extranet Agreement

Exhibit B
Designated Access Administrator and Authorized User Acknowledgement

I, Maria Brusoe, am an employee or representative of Community Action Program Gila County ("Agency"). Agency has designated me as one of its authorized agents to process guarantees by Agency of APS customer payments on the APS Agency Guarantee Extranet ("Extranet"). Pursuant to my authorization, I hereby acknowledge and agree to the following:

1. That the password that I receive to access the Extranet, and the APS customer information to which I may have access are strictly confidential and are to be treated as such. I further agree (a) not to disclose such information to any third parties, and (b) to only disclose such information to those Agency employees who are authorized to access the Extranet and who have a need to know the information in regards to processing an APS customer payment guarantee.

2. That I will not access any information or conduct any transactions on the Extranet using another person's password. I will log off the Extranet during absences to prevent any unauthorized or improper use.

3. That I will only access APS customer information for those APS customers who have first provided Agency a signed document in which the APS customer consents to the Agency accessing that APS customer's information.

4. That I will use the Extranet and its information only for purposes related to providing financial assistance to APS customers or guaranteeing an APS customer's payment. I further agree that I will not do any of the following (a) falsify any information I input into the Extranet, (b) use the Extranet or its information for any personal use or gain, or (c) conduct any transactions involving my own APS customer account.

5. I understand that my use of the Extranet may be monitored by Agency and APS, and any unauthorized access or misuse of the Extranet or APS customer information may be reported to the appropriate legal authorities for prosecution.

6. I further understand that the automated and manual processes by and through which Agency guarantees the payments of APS customers, which shall include the Extranet and its functions, algorithms, sequence, structure, organization, user interface, software and documentation, are or include trade secrets of APS. I agree to maintain the secrecy and confidentiality of any such trade secrets which I learn through my use of the Extranet or guaranteeing of APS customer payments.

7. Agency shall not transmit APS customer account numbers, financial account or Social Security numbers through email unless that information is encrypted.

DATED this 28th of June, 2012.

Signature: Maria Brusoe

Name: Maria Brusoe Title: Casemanager

aps

APS Extranet Agreement

Exhibit B
Designated Access Administrator and Authorized User Acknowledgement

I, Estelle Belarde, am an employee or representative of Community Action Program Gila County ("Agency"). Agency has designated me as one of its authorized agents to process guarantees by Agency of APS customer payments on the APS Agency Guarantee Extranet ("Extranet"). Pursuant to my authorization, I hereby acknowledge and agree to the following:

1. That the password that I receive to access the Extranet, and the APS customer information to which I may have access are strictly confidential and are to be treated as such. I further agree (a) not to disclose such information to any third parties, and (b) to only disclose such information to those Agency employees who are authorized to access the Extranet and who have a need to know the information in regards to processing an APS customer payment guarantee.

2. That I will not access any information or conduct any transactions on the Extranet using another person's password. I will log off the Extranet during absences to prevent any unauthorized or improper use.

3. That I will only access APS customer information for those APS customers who have first provided Agency a signed document in which the APS customer consents to the Agency accessing that APS customer's information.

4. That I will use the Extranet and its information only for purposes related to providing financial assistance to APS customers or guaranteeing an APS customer's payment. I further agree that I will not do any of the following (a) falsify any information I input into the Extranet, (b) use the Extranet or its information for any personal use or gain, or (c) conduct any transactions involving my own APS customer account.

5. I understand that my use of the Extranet may be monitored by Agency and APS, and any unauthorized access or misuse of the Extranet or APS customer information may be reported to the appropriate legal authorities for prosecution.

6. I further understand that the automated and manual processes by and through which Agency guarantees the payments of APS customers, which shall include the Extranet and its functions, algorithms, sequence, structure, organization, user interface, software and documentation, are or include trade secrets of APS. I agree to maintain the secrecy and confidentiality of any such trade secrets which I learn through my use of the Extranet or guaranteeing of APS customer payments.

7. Agency shall not transmit APS customer account numbers, financial account or Social Security numbers through email unless that information is encrypted.

DATED this 28 of June, 2012

Signature: Estelle Belarde

Name: Estelle Belarde Title: Housing Service Assistant

aps

APS Extranet Agreement

Exhibit B

Designated Access Administrator and Authorized User Acknowledgement

I, Patricia Campos, am an employee or representative of Community Action Program Gila County ("Agency"). Agency has designated me as one of its authorized agents to process guarantees by Agency of APS customer payments on the APS Agency Guarantee Extranet ("Extranet"). Pursuant to my authorization, I hereby acknowledge and agree to the following:

1. That the password that I receive to access the Extranet, and the APS customer information to which I may have access are strictly confidential and are to be treated as such. I further agree (a) not to disclose such information to any third parties, and (b) to only disclose such information to those Agency employees who are authorized to access the Extranet and who have a need to know the information in regards to processing an APS customer payment guarantee.

2. That I will not access any information or conduct any transactions on the Extranet using another person's password. I will log off the Extranet during absences to prevent any unauthorized or improper use.

3. That I will only access APS customer information for those APS customers who have first provided Agency a signed document in which the APS customer consents to the Agency accessing that APS customer's information.

4. That I will use the Extranet and its information only for purposes related to providing financial assistance to APS customers or guaranteeing an APS customer's payment. I further agree that I will not do any of the following (a) falsify any information I input into the Extranet, (b) use the Extranet or its information for any personal use or gain, or (c) conduct any transactions involving my own APS customer account.

5. I understand that my use of the Extranet may be monitored by Agency and APS, and any unauthorized access or misuse of the Extranet or APS customer information may be reported to the appropriate legal authorities for prosecution.

6. I further understand that the automated and manual processes by and through which Agency guarantees the payments of APS customers, which shall include the Extranet and its functions, algorithms, sequence, structure, organization, user interface, software and documentation, are or include trade secrets of APS. I agree to maintain the secrecy and confidentiality of any such trade secrets which I learn through my use of the Extranet or guaranteeing of APS customer payments.

7. Agency shall not transmit APS customer account numbers, financial account or Social Security numbers through email unless that information is encrypted.

DATED this 29th of June, 2012

Signature: P Campos

Name: Patricia Campos Title: Section 8 Administrator

aps

APS Extranet Agreement

Exhibit B
Designated Access Administrator and Authorized User Acknowledgement

I, Gabriel Eglicio, am an employee or representative of Community Action Program Gila County ("Agency"). Agency has designated me as one of its authorized agents to process guarantees by Agency of APS customer payments on the APS Agency Guarantee Extranet ("Extranet"). Pursuant to my authorization, I hereby acknowledge and agree to the following:

1. That the password that I receive to access the Extranet, and the APS customer information to which I may have access are strictly confidential and are to be treated as such. I further agree (a) not to disclose such information to any third parties, and (b) to only disclose such information to those Agency employees who are authorized to access the Extranet and who have a need to know the information in regards to processing an APS customer payment guarantee.

2. That I will not access any information or conduct any transactions on the Extranet using another person's password. I will log off the Extranet during absences to prevent any unauthorized or improper use.

3. That I will only access APS customer information for those APS customers who have first provided Agency a signed document in which the APS customer consents to the Agency accessing that APS customer's information.

4. That I will use the Extranet and its information only for purposes related to providing financial assistance to APS customers or guaranteeing an APS customer's payment. I further agree that I will not do any of the following (a) falsify any information I input into the Extranet, (b) use the Extranet or its information for any personal use or gain, or (c) conduct any transactions involving my own APS customer account.

5. I understand that my use of the Extranet may be monitored by Agency and APS, and any unauthorized access or misuse of the Extranet or APS customer information may be reported to the appropriate legal authorities for prosecution.

6. I further understand that the automated and manual processes by and through which Agency guarantees the payments of APS customers, which shall include the Extranet and its functions, algorithms, sequence, structure, organization, user interface, software and documentation, are or include trade secrets of APS. I agree to maintain the secrecy and confidentiality of any such trade secrets which I learn through my use of the Extranet or guaranteeing of APS customer payments.

7. Agency shall not transmit APS customer account numbers, financial account or Social Security numbers through email unless that information is encrypted.

DATED this 5th of July 2012.

Signature: Gabriel E. Eglicio

Name: Gabriel E. Eglicio Title: Rehab Specialist

APS Extranet Agreement

Exhibit C

APS Customer Consent Form Language

I hereby consent to and authorize _____ ("Agency") to access any information from Arizona Public Service Company ("APS") concerning my payment history, delinquencies, outstanding amounts owed, required deposits, usage history and other related information, and to use such information in connection with my application for financial assistance on this date. This consent and authorization shall expire following Agency's review of my APS customer account information for qualification of Agency financial assistance on this date.

APS Account Number: _____ Date: _____

Name of APS Customer of Record _____

Service Address _____

Client Receiving Assistance _____
(if different than Customer of Record)

Must check one of the following:

___ I am the APS Customer of Record

___ I reside at the above address and the above named APS Customer of Record has authorized me to grant consent to the Agency access to the APS information for the Customer of Record at this residence for the purpose of obtaining financial assistance.

Signature: _____

Arizona Public Service - Payson District

400 W Longhorn Road
Payson, AZ 85541

Phone: (928) 474-7642
Fax: (928) 474-7629

June 29, 2012

Gila County
1400 E. Ash Street
Globe, AZ 85501

RE: Reminder of Public Safety issues and minimum approach distance requirements when working near overhead or underground power lines.

Dear Sirs:

We appreciate the opportunity to assist you with your construction project, and would like to take this occasion to provide you with important information about safety regulations which apply to all work performed near overhead or underground power lines.

Prior to start of construction, you should be familiar with several clearance requirements regarding work performed near overhead and underground power lines. These include, but are not limited to, (i) Arizona law regarding high voltage overhead power lines and safety restrictions, (ii) Arizona law requiring underground facilities safe excavation practices, (iii) The National Electrical Safety Code, and (iv) regulations promulgated by the Occupational Safety and Health Administration (OSHA).

By taking a few moments now to review these safety requirements, you should be better able to complete your project in a safe and timely manner and reduce the possibility of accidents. Your compliance with these requirements in cooperation with APS will not only help you maintain project safety, but reduce the expense of project delays and damage claims.

Overhead Power Lines:

Arizona law regarding "High Voltage Power Lines and Safety Restrictions" (A.R.S. 40-360.41 through 45) requires that a minimum clearance of ten (10) feet be maintained between an energized power line of up to 50 kV and a piece of mechanical equipment, its load and any attachments such as "tag lines." Energized power lines with higher voltages require even greater distances. New OSHA regulations regarding the use of cranes may require even greater clearance distances.

In fact, the Arizona law states that, "A person or business entity shall not..operate any mechanical equipment or hoisting equipment or any load of such equipment, **any part of which is CAPABLE OF vertical, lateral or swinging motion closer to any high voltage overhead lines than"** the minimum clearance distance, "unless prior arrangements have been made with the utility company to make sure that the work can be performed safely."

This means that before doing any work near overhead power lines, you must: (1) consult with APS regarding the specific work you have planned near overhead power lines, and the specific date you plan to do the work; and (2) you must make specific arrangements with APS so that the work can be done safely.

If you anticipate your project "work" will require activity closer to overhead power lines that these minimum standards allow, you must call APS at: 928-474-7642 and ask for Karen Killen to meet with you at the construction site to address your construction plans so that appropriate safety precautions can be made. **No work can be done until safe work arrangements have been made with APS.** Failure to comply with this statute may not only be hazardous to your employees, but could result in damage claims against you. Violations of this statute could also subject you to a five thousand dollar ($5,000) fine from the State as well as applicable fines from OSHA.

The National Electrical Safety Code "NESC" specifies clearances that must be maintained between power lines and buildings, signs and other structures. These clearances vary with the voltage of the line, activity expected near the line and the structure that may be near the line. If you construct buildings, signs or other structures nearer to existing power lines than the NESC authorizes, such construction activity may not only be hazardous to your employees (and a violation of OSHA and Arizona safety laws), but it may also subject you to the cost of correcting NESC code violations.

Underground Power Lines:

Arizona law regarding "Underground Facilities" (A.R.S. 40-360.21 through 32) requires that you arrange for locating the position of underground facilities before beginning any excavation, and that you take necessary measures (including only hand digging within two feet of underground facilities) to ensure that the facilities are not cut or damaged. Failure to do so may not only be hazardous to your employees, but could result in damage claims against you. Violation of this statute may also subject you to a five thousand dollar ($5,000.00) fine from the state. You may make arrangements for locating underground power lines free of charge by calling the Arizona Blue Stake Center at least two (2) full working days excluding holidays prior to performing any excavation. Please use the following number 1-800-782-5348 outside of Maricopa County, or you can use the nationally recognized three (3) digit number 811 to contact the Arizona Blue Stake Center, Monday through Friday excluding holidays from 6:00 am through 5:00 pm.

Please remember these safety standards and requirements along with applicable city ordinances when planning and constructing your projects. For a more complete statement of the law, refer to the attached brochure and the referenced statutes. If you're specific needs require assistance from APS, please call the number listed above. Thank you for your interest in safety.

Sincerely,

Karen A. Killen

Karen A. Killen

CSR – Payson Office

Applicant Safety Acknowledgement Form
(to acknowledge receipt of Safety Letter and Safety Brochure)

This is to acknowledge that I have received from the APS Representative a copy of APS' Safety Letter and associated Safety Brochure which outline my responsibilities before and during any excavation, and inform me of minimum approach distances that must be maintained, when working near overhead power lines.

EXTEND OH SECONDARY 50' TO NEW 100 AMP SES

Project Identifying Information

108 W. MAIN STREET, PAYSON, AZ 85541

Project Address

Don E. McDaniel, Jr., Gila County Manager

Printed Name (Applicant or Applicant's Representative)

GILA COUNTY

Company Name (if applicable)

Don E McDaniel Jr 7/18/12

Signature (Applicant or Applicant's Representative)

Date of Acknowledgement: _____/_____/_____

[ ] **Part Refundable and Part Non-Refundable** (requires the Applicant to also be the electric service customer at subject property)
[X] **Non-Refundable**

APS Work Order # WFNCOMSVC

aps

LINE EXTENSION AGREEMENT
(For the Construction of Electric Distribution Facilities)

The parties to this Agreement are ARIZONA PUBLIC SERVICE COMPANY, an Arizona corporation, hereinafter called "APS," and *Gila County* hereinafter called "Applicant." In consideration of the promises and provisions set forth below, the parties to this Agreement agree as follows:

1 CONSTRUCTION

1.1 APS shall construct electric distribution facilities as an extension of its present facilities in order to serve *108 W. Main Street, Payson*, Arizona, in accordance with the attachments set forth in Section 6 to this Agreement and APS' line extension tariff, "Schedule 3, Revision No. 11: Conditions Governing Extensions of Electric Distribution Lines and Services," hereinafter called "Extension Policy." The terms and conditions of APS' Extension Policy and the attachments described in Section 6 are hereby incorporated in full into this Agreement.

1.2 The earthwork, conduits and materials necessary for construction shall be provided by the parties as follows: Applicant shall provide distribution line and service line earthwork; APS shall provide and Applicant shall install equipment pads, manholes, pull boxes, junction boxes, and associated appurtenances (unless otherwise noted on the sketch); Applicant shall provide and install all conduit(s) (unless otherwise noted on the sketch). Applicant-provided earthwork, conduits, materials, and installation(s) shall be provided in accordance with the attached sketch(es), specifications, and Trenching Agreement - Requirements, and shall be approved by an authorized representative of APS prior to APS commencing the installation of lines and equipment.

1.3 Distribution facilities shall be installed by APS in the location indicated on the attached sketch(es). All suitable easements or rights-of-way required by APS for any portion of the extension which is either on premises owned, leased or otherwise controlled by Applicant, or other property required for the extension, shall be conveyed to APS (in APS' standard Utility Easement form attached hereto) by Applicant without cost to or condemnation by APS and in reasonable time to meet proposed service requirements. Applicant shall provide APS access to these distribution facilities at all times, and shall not block or interfere with said access in any way, including fencing or the placement of obstructions adjacent to and on the door-side of cabinets, transformers, or any other equipment.

1.4 All meters are to be located as shown on the sketch, a copy of which is attached to this Agreement. No variation to the meter locations identified may be made unless approved in writing by an authorized representative of APS.

1.5 Applicant's "on and off" site construction required in support of APS' construction is estimated to begin on 6/20/2012 and to be completed on 6/25/2012. APS' construction is estimated to begin on 7/2/2012 and to be completed on 7/6/2012 contingent upon scheduled completion of Applicant's "on and off" site construction in accordance with APS' specifications. The dates of APS' construction are provided only as estimates, are not binding upon APS, and are subject to change to accommodate APS' workload, material requirements, or other factors.

2 PAYMENT

APS shall not schedule or begin any construction pursuant to this Agreement until it receives from Applicant a payment of $228.50 DOLLARS, which sum equals the installation cost to APS of extending service to Applicant, as authorized by the Extension Policy. Such payment shall include all costs for the facilities (and municipal street lighting facilities, if applicable) required to serve Applicant's anticipated load. A breakdown of these costs is attached hereto as the Applicant Charges. Such payment is due to APS upon Applicant's execution of this Agreement.

3 REIMBURSEMENTS

APS shall pay (reimburse) Applicant $ NA DOLLARS which represents the total reimbursement for items summarized on the Applicant Reimbursement Details attachment which represent work, trenching, excavation, materials, etc. that the Applicant has agreed to furnish. Reimbursement shall be made after completion of the Applicant's work or activities and shall be contingent upon APS' Final Inspection and Approval.

4 REFUNDS

4.1 Single-family residential and non-residential extensions may be eligible for a refund of a portion of the payment if all of the applicable requirements to qualify for a refund as set forth in Sections 1.1 or 2.0 of the Extension Policy are met (including the requirement that Applicant will be the customer of record and pay the monthly bills for electric service at the subject property upon permanent occupancy).

Applicant hereby declares that Applicant will _X_ will not _____ be the customer of record and pay the monthly bills for electric service at the subject property upon permanent occupancy. (Applicant to initial the applicable selection.)

4.2 If a refund is warranted, the refund will be paid to the Applicant if, at the time the refund becomes payable, the Applicant is the owner (or long term lessee) of the subject property. If the Applicant no longer owns (or holds a long term lease for) the property, the refund will be provided to the current property owner. If the property is owned by multiple parties, the property owners will each receive an equal share of any refunds.

4.3 APS reserves the right to withhold refund to Applicant if Applicant's account(s) are delinquent, and apply these refund amounts to past due bills.

4.4 If prior to the start of APS' construction, Applicant notifies APS in writing of Applicant's request to cancel this Agreement, Applicant shall be entitled to receive a refund of the amount paid less all fees and costs incurred by APS associated with the Agreement prior to cancellation.

5 GENERAL PROVISIONS

5.1 This Agreement shall be binding upon and inure to the benefit of the heirs, administrators, executors, or assignees of the parties to this Agreement, provided, however, that no assignment or other transfer of this Agreement shall be binding upon APS or create any rights in Applicant's assignee until such assignment or other transfer is approved and accepted in writing by an authorized representative of APS.

5.2 All electric facilities installed pursuant to this Agreement shall be owned by APS.

5.3 APS may use the installed facilities to serve other customers, and may extend service to other customers from the facilities located within the rights-of-way and easement(s) conveyed to APS pursuant to this Agreement.

5.4 This Agreement does not require APS to construct any line extensions to future customers not included in the attached sketches.

5.5 If Applicant fails to complete its "on and off" site construction requirements in support of APS' construction within six months of the estimated date of completion for said Applicant construction, as set forth in Section 1.5 hereof, APS shall have the right to revise the payment amount required pursuant to Section 2 hereof which Applicant will be required to pay prior to APS proceeding with construction or energizing its facilities.

5.6 The prevailing party in any proceedings instituted by either party regarding a dispute concerning this Agreement shall be entitled to recover its reasonable attorney's fees, costs, and expenses.

5.7 If any term or condition of this Agreement is held to be invalid, void, or otherwise unenforceable by any court of competent jurisdiction, that holding shall not affect the validity or enforceability of any other term or condition of this Agreement, unless enforcing the balance of this Agreement would deprive either party of a fundamental benefit of its bargain.

5.8 This Agreement contains the final and complete agreement between the parties for the construction of the line extension described herein and supersedes all prior and contemporaneous conduct, agreements, statements, representations, negotiations, course of conduct, course of dealing, and communications pertaining to the subject matter hereof, whether written or oral. The parties shall not be bound by or be liable for any statement, representation, promise, inducement, or understanding of any kind not set forth in or formally incorporated into this Agreement.

6 ATTACHMENTS

The provisions, terms, and conditions of each of the following documents, attached to this Agreement, are hereby incorporated in full into this Agreement.

NOTE: Documents marked below are attached

	Design Sketches
	Applicant Charges (Part Refundable and Part Non-Refundable)
	Statement of Charges (Part Refundable and Part Non-Refundable)
X	Applicant Charges (Non-Refundable)
X	Statement of Charges (Non-Refundable)
	Pro-Rata Refund Calculation
	Pro-Rata Refund Exhibit
	Applicant Reimbursement Details
X	Sales Invoice
	Electric Supply Agreement
	Trenching Agreement – Requirements
	Utility Easement
	Dusk-to-Dawn Work Order
	Developer Streetlight Agreement
	Street Light Details
	Attachment A Signature Page

7 EFFECTIVE DATE

This Agreement will become effective only upon the execution of this document by duly authorized representatives of the parties and payment by Applicant to APS of the total amount set forth in Section 2, and will be deemed effective as of the date signed by APS.

ARIZONA PUBLIC SERVICE COMPANY

Signature: _____

Name: *Steve Quinn*

Title: *Manager, Gila/Navajo*

Date: _____

Study and Design Agreement Payment
APS Invoice #: _____
Amount: $ _____
Date Received: _____

Material Order Agreement Payment
APS Invoice #: _____
Amount: $ _____
Date Received: _____

Line Extension Agreement Payment
APS Invoice #: _____
Amount: $ _____ (Including Taxes)
Date Received: _____

Total Amount Paid $ _____ (Including Taxes)

APPLICANT or APPLICANT'S REPRESENTATIVE

Signature: Don E. McDaniel Jr.

Name: *Don E. McDaniel, Jr.*

Title: *Gila County Manager*

Date : *7/18/12*

Mailing Address:
1400 E. Ash Street
Globe, AZ 85501
Permanent Phone #: *(928)425-3231*

The individual executing this Agreement on behalf of Applicant represents and warrants: (i) that he or she is authorized to do so on behalf of Applicant; (ii) that he or she has full legal power and authority to bind Applicant in accordance with the terms herein and, if necessary, has obtained all required consents or delegations of such power and authority.

aps

APS Representative:
Karen A. Killen
CPM
400 W. Longhorn
Payson, AZ 85541
928-474-7642

Bill To:
Gila County

1400 E. Ash Street
Globe, AZ 85501

Applicant Charges (Non-Refundable)

DATE: 06/29/12
INVOICE #

Work Order #: WFNCOMSVC
Fixed Work Order #: WFNCOMSVC - New Commercial Svc
Service Address and City: 108 W. Main Street, Payson
Service Zip Code 85541
Description of Work:
Run 1/0 OH 50' to new 100 amp SES

DESCRIPTION		AMOUNT
-		
Statement of Charges (RC964)		$ 228.50
Statement of Charges	$ 228.50	
-		
-		
-		
-		
-		
-	$ -	
-		
- -	- -	
	$ -	
TOTAL CHARGES TO APPLICANT (Non-Refundable)		$ 228.50
-		
TOTAL DUE AFTER PRE-PAYMENT(S)		$ 228.50

Rev 7/19/11

Thomas Reprographics, Inc.

Maintenance Agreement

Bill To

Gila County Engineering
1400 E. Ash Street
Globe, Arizona 85501
Valrie Bejarano 928-402-8612
vbejarano@co.gila.az.us

Location

745 N. Rose Mofford Way
Globe, Arizona 85501

Model #	Serial #	Contract Terms	Rate
Oce Plotwave 300	**330200694**	Maintenance Agreement provides all Travel, Labor, Parts and Preventive Maintenance visits. Consumable items such as Media, Toner and Developer are not covered.	1,680 / Year
Allowable Usage	24,000 LF/ Year	Client agrees to pay Thomas Reprographics .041 per Sq. ft. for usage in excess of the semi-annual usage factor of 12,000 Sq. feet. The excess copy charge is billed semi-annually in arrears.	
		Special Notes: Photoreceptor coverage YES Beginning Meter to be taken Additional Terms and Conditions on page 2. Coverage period 9/1/2012 – 8/31/2013	

The equipment listed is to be maintained subject to the terms and conditions on the reverse side.

Acceptance

Customer Name Don E. McDaniel, Jr. Gila County Manager P.O# _____

Customer Signature _____ Date 7/18/12

Service Manager Chris Rice Date 7/10/12

TERMS AND CONDITIONS

THOMAS REPROGRAPHICS

AGREEMENT

This Agreement covers the equipment described on the face hereof and does not include any equipment or accessories not listed thereon. During the term of this Agreement, specified on face hereof, Thomas Reprographics will maintain the Equipment in good working order in accordance with the terms and conditions set forth.
This Agreement may not be assigned by Customer. Cancellation requires a 30-day written notice and is subject to penalty as set forth in Paragraph 4.
Specifically excluded from this Agreement is the photoreceptor drum and consumable supplies necessary to test or operate equipment covered through this Agreement unless otherwise specified.
All taxes levied or imposed, now or hereafter, by any government authority shall be timely paid by the Customer.
This Agreement provides service for Equipment at the address specified on the face hereof. Customer agrees to be responsible for all costs associated with relocation initiated by Customer.
In the event any equipment is moved to another location, this agreement is subject to an appropriate adjustment in the annual rate and meter charge where applicable.

INVOICE/PAYMENT

Maintenance Agreement charges are made payable in advance as specified on the face hereof. This Agreement will automatically renew on the annual renewal date shown on the face hereof, unless written notice is received 30 days prior to the annual renewal date at Thomas Reprographics, Inc. 4102 N. 24th Street Phoenix, Arizona 85016.
With respect to Equipment subject to associated usage or overage fees, at the end of each period, Customer agrees to provide meter readings to Thomas Reprographics. If meter readings are not provided promptly to Thomas Reprographics, meter charges may be estimated and invoiced accordingly.
Invoices are payable Net 10th Prox.

FULL SERVICE MAINTENANCE

Service as specified in the face hereof, will be provided by Thomas Reprographics or its designated Authorized Dealer during normal business hours. Service at time other than Thomas Reprographics normal business hours shall be furnished at Customer's request on an "If available" basis at the "After Hours," travel and labor rates.
Customer agrees to provide Thomas Reprographics access to the Equipment to perform the Periodical Maintenance Program as specified by Thomas Reprographics.
Thomas Reprographics has the right to install and or remove developer to maintain good copy quality in performance of their Agreement. Developer will be removed in accordance with applicable Periodic Maintenance programs and will be removed from the Customer's premises unless The Customer specifically requests otherwise.
All parts determined to be irreparable by Thomas Reprographics will be replaced under Thomas Reprographics sole judgment. Replaced parts become the property of Thomas Reprographics.
Thomas Reprographics will install improvements designated by the Manufacturer as "Mandatory retrofit" for the equipment.
Equipment upgrades designated as "Optional" by the Manufacturer are not covered by this agreement. Such "Optional" upgrades will be performed at the current prevailing rate.
Customer agrees that Thomas Reprographics will not be required to perform maintenance under this Agreement made necessary due to accident, misuse, abuse, neglect, theft, vandalism electrical power failure, fire, water or other casualty, or to repairs made necessary as a result of service personnel other than Thomas Reprographics or a undesignated authorized dealer, or repeated use of supplies or parts that do not meet the manufactures specifications. Separate charges for repairs or replacement due to the foregoing shell be born by the Customer and performed at Thomas Reprographics prevailing rates.

H Repetitive service resulting from either a failure in replacing or updating recommended supplies which have exceeded their use through damage or normal wear, or the performance of key operator duties as set forth during operator training at time of installation of equipment, will be subject to charge at the current prevailing rates in effect.

I When service work beyond the scope of this Agreement is required. Thomas Reprographics will submit a cost estimate for such service work as authorized by the Customer. A separate invoice will be rendered.

4. BREACH/CANCELLATION

A Thomas Reprographics may cancel this agreement on breach by Customer of any terms and conditions hereon, by written notice to customer ten (10) days in advance.

B In the event of cancellation initiated by Customer, Thomas Reprographics must receive cancellation notice from Customer 30 days in advance.

C Upon termination of this Agreement either by breach or cancellation, Customer shall forfeit all payments made annually in advance plus the linear meter charge for 30 days from the effective date of notice or cancellation. If the specified Agreement on the face hereof is an annual contract with the minimum charge payable monthly in advance, the Customer shall remain liable for the remaining monthly charges until the termination of the contract period as specified on the face hereof plus the linear meter charge for 30 days from the effective date of notice of cancellation.

5. FORCE MAJEURE

A Thomas Reprographics shell not be responsible for failure to render service due to causes beyond its control including, but not limited to: work stoppages, fire, civil disobedience's, riots, rebellions acts of God, and similar occurrences

6. GENERAL PROVISIONS

A Equipment Operators: Customer shall provide specified equipment operators trained to perform key operator duties as set forth during operator training at time of Equipment Installation

B Notices: All notices made pursuant to this Agreement will be effective upon mailing to Thomas Reprographics and the Customer at the addresses on the face hereof.

C Headings: The headings and titles of the agreement are inserted only for convenience and shall not effect the interpretation or construction of any provision.

D Governing Law: The Agreement will be governed by and construed according to the laws of the State of Arizona

7. ENTIRE AGREEMENT

A This Agreement shall become effective only after execution by Customer and Thomas Reprographics in the (place) provided. It is expressly understood that no further form of acceptance, verbal or written, will be valid or binding and that this Agreement shall constitute the entire Agreement between the Customer and Thomas Reprographics with respect to its subject matter, irrespective of inconsistent or additional terms and conditions in Customer's Purchase Orders and any other documents submitted to Thomas Reprographics by Customer or in representations made by Thomas Reprographics, Inc. personnel.

Attachment "A" by mention is made a binding part of this agreement as set forth herein.

ATTACHMENT "A"

Anti-Terrorism Warranty: Pursuant to **A.R.S. §35-393.06(B) and 35-391.06(A)** the Contractor certifies that it does not have scrutinized business operations in Iran or Sudan and that they are in compliance with the Export Administration Act and not on the Excluded Parties List.

Legal Arizona Workers Act Compliance: Firm hereby warrants that it will at all times during the term of this Contract comply with all federal immigration laws applicable to Firm's employment of its employees, and with the requirements of A.R.S. § 23-214 (A) (together the "State and Federal Immigration Laws"). Firm shall further ensure that each subcontractor who performs any work for Firm under this contract likewise complies with the State and Federal Immigration Laws.

County shall have the right at any time to inspect the books and records of Firm and any subcontractor in order to verify such party's compliance with the State and Federal Immigration Laws.

Any breach of Firm's or any subcontractor's warranty of compliance with the State and Federal Immigration Laws, or of any other provision of this section, shall be deemed to be a material breach of this Contract subjecting Firm to penalties up to and including suspension or termination of this Contract. If the breach is by a subcontractor, and the subcontract is suspended or terminated as a result, Firm shall be required to take such steps as may be necessary to either self-perform the services that would have been provided under the subcontract or retain a replacement subcontractor as soon as possible so as not to delay project completion.

Firm shall advise each subcontractor of County's rights, and the subcontractor's obligations, under this Article by including a provision in each subcontract substantially in the following form: "Subcontractor hereby warrants that it will at all times during the term of this contract comply with all federal immigration laws applicable to Subcontractor's employees, and with the requirements of A.R.S. § 23-214 (A). Subcontractor further agrees that County may inspect the Subcontractor's books and records to insure that Subcontractor is in compliance with these requirements. Any breach of this paragraph by Subcontractor will be deemed to be a material breach of this contract subjecting Subcontractor to penalties up to and including suspension or termination of this contract."

Cancellation: This agreement is subject to the cancellation pursuant of A.R.S. §38.511.

Thomas Reprographics, Inc.

Chris Rincon

Individual authorized to sign

CHRIS RINCON

Print Name

SERVICE MANAGER

Title

7/10/12

Date

Buck Mountain Enterprises, Inc.

HC 1 Box 1350 - Strawberry, AZ 85544 - Ph. 928-476-4821
Lic. #ROC274826

Addendum To Contract

Contract 060612

Gila County Health Dept. (referred to as "Client"- see original contract) herby authorizes And Son Construction to do the work described as follows, as an addition to the original contract PO#2012-00000818.

Client, furthermore, accepts responsibility for any costs which may result due to these changes, and agrees to pay for these additional cost immediately upon signing of this Change Order. All costs of changes provided by And Son are non-negotiable and must be paid in full.

LIST OF CHANGES:

1) **Augmentation of existing grade to re-install handicap parking area "level" vs. the previously "sloped" handicapped parking.**
2) **Additional grading required along the entire 60'+/- for the sewer trench excavation area.**
3) **Additional profit and overhead on changes.**
4) **Additional sales tax on changes**

ADDITIONAL CHARGES:

1) **$240.00**
2) **$360.00**
3) **$90.00**
4) **$64.17**

TOTAL DUE: $754.17

Respectfuly submitted by:

Eugene F. Wullkotte

The above described changes and charges are hereby accepted by the undersigned. And Son Construction is hereby authorized to complete the above described work, and payment will be made upon request.

GILA COUNTY

Accepted by: Don E. McDaniel, Jr.
Gila County Manager

Signature: Don E. McDaniel

Date: 7/18/12