PURSUANT TO A.R.S. SECTION 38-431 THE GILA COUNTY BOARD OF SUPERVISORS WILL HOLD AN OPEN MEETING IN THE SUPERVISORS' AUDITORIUM, 1400 EAST ASH STREET, GLOBE, ARIZONA. ONE OR MORE BOARD MEMBERS MAY PARTICIPATE IN THE MEETING BY TELEPHONE CONFERENCE CALL OR BY INTERACTIVE TELEVISION VIDEO (ITV). **ANY MEMBER OF THE PUBLIC IS WELCOME TO ATTEND THE MEETING VIA ITV WHICH IS HELD AT 610 E. HIGHWAY 260, BOARD OF SUPERVISORS' CONFERENCE ROOM, PAYSON, ARIZONA.** THE AGENDA IS AS FOLLOWS:

---

## REGULAR MEETING - TUESDAY, JANUARY 10, 2012 - 10 A.M.

1 Call to Order - Pledge of Allegiance – Invocation

2 **PRESENTATIONS:**

A Presentation of the 2012 "I want to be an Olympic..." Calendar winners by Daisy Flores, Gila County Attorney.

B Public recognition of 1 employee for December's "Spotlight on Employees" Program, as follows: Jake Garrett. **(Erica Raymond)**

3 **PUBLIC HEARINGS:**

A Public Hearing - Information/Discussion/Action to adopt Resolution No. 12-01-02, which approves Gila County Planning & Zoning Department Case No. CUP-11-03, an application submitted by William R. Wait for a Conditional Use Permit on Gila County Assessor's tax parcel no. 301-03-038A, located at 9809 W. Fossil Creek, Strawberry, Arizona, to allow a portion of the existing garage to be used as a guest house. **(Bob Gould)**

B Public Hearing - Information/Discussion/Action to continue to the January 24, 2012, Board of Supervisors' regular meeting the adoption of Resolution No. 12-01-03 regarding Gila County Planning and Zoning Department Case No. CUP-11-02, an application submitted by William Jacobs for a Conditional Use Permit on Gila County Assessor's tax parcel numbers 302-32-031A and 302-32-032A located at 469 and 527 W. Eleanor in East Verde Park, Payson, Arizona, to allow parcels to be used as a church retreat.
**(Bob Gould)**

4 **REGULAR AGENDA ITEMS:**

A Information/Discussion/Action to adopt Resolution No. 12-01-04, supporting HR1904, the Southeast Arizona Land Exchange and Conservation Act, Resolution Copper's extensive reclamation of the historic Magma Mine in Superior, their contributions to the local economy and the potential for the Copper Triangle to become one of the largest copper producing regions in the world. **(Adam Hawkins)**

B **(Motion to adjourn as the Gila County Board of Supervisors and convene as the Gila County Flood Control District Board of Directors.)** Information/Discussion/Action to approve a variance from Section 5.2.C of the Gila County Floodplain Management Ordinance to allow Rickie Wood to retrofit an 896 square foot garage to be used solely for parking and storage, with the lowest floor elevation 2.1 feet below the regulatory flood elevation, and providing a degree of flood protection for the building by using flood-resistant materials below the regulatory flood elevation, and by providing permanent unobstructed openings to allow the water pressure to equalize on both sides of the walls to reduce the probability of wall collapse from water pressure. **(Steve Sanders/Darde de Roulhac) (Motion to adjourn as the Gila County Flood Control District Board of Directors and reconvene as the Gila County Board of Supervisors.)**

C Public Sale – Information/Discussion/Action for the public sale an unnamed alley lying between Hill and Marian Street and between a portion of blocks 23 and 24 as shown on Miami Map No. 2, Official Map No. 22, Gila County Records, and accept a bid in the amount of $902.00 from the Nichols Trust. **(Steve Sanders)**

D Information/Discussion/Action to adopt Resolution No. 12-01-01 approving the disposal of an unnecessary public roadway being a portion of Hill Street and unnamed alleys in Inspiration Townsite, Plat Map No. 39, Gila County Records, and to authorize the Chairman to execute and deliver in the name and under the seal of the County of Gila, a corrective quit claim deed conveying the abandoned road and alleyways to Brant and Maurisa Palmer. **(Steve Sanders)**

E Information/Discussion/Action to authorize the advertisement of Call for Bids No. 113111-1 for the Pine Creek Canyon Road Reconstruction Project. **(Steve Stratton)**

F Presentation of information related to Gila County Policy No. BOS-4-2005, Disclosure of Conflicts of Interest, with a reminder to each elected official and division/department director to communicate said policy to their employees. **(Marian Sheppard)**

5 **CONSENT AGENDA ACTION ITEMS:**

A Approval of Amendment No. 1 to Contract No. LW-ESA-12-2182-02 between the Governor's Office of Energy Policy and the Gila County Division of Community Services, Weatherization Program, to receive additional funding in the amount of $9,200.44, for a total budget of $144,893.44, to continue to provide weatherization services to eligible citizens residing in Gila County, effective upon signature by both parties and continuing through June 30, 2012.

B Approval of the renewal of the Limited Use Agreement for Detention Services No. 08-99-0015 between the United States Marshals Service and Gila County, on behalf of the Gila County Juvenile Detention Center, in the amount of $157,680 to allow the Gila County Juvenile Detention Center to continue to provide detention services to the United States Marshals Service for the period of October 29, 2011, through October 28, 2012.

C Approval of the Release of Claims to Contract No. CMK0L090002 between the Bureau of Indian Affairs and Gila County, on behalf of the Gila County Juvenile Detention Center, to finalize and close out this contract.

D Authorization of the Chairman's signature on Amendment No. 2 to Contract 050709-1 between Gila County and Southwest Asphalt whereby the contractor will continue to provide 1/2 Chips and Asphalt for repair and maintenance of Gila County Copper Region roads from December 17, 2011, to December 16, 2012.

E Authorization of the Chairman's signature on Amendment No. 2 to Contract 050709-1 between Gila County and CEMEX whereby the contractor will continue to provide 1/8" Chips and ABC for repair and maintenance of Gila County Copper Region roads from December 17, 2011, to December 16, 2012.

F Approval of Intergovernmental Agreement No. KR11-0111 between the Gila County Board of Supervisors, the Gila County School Superintendent, the Gila County Superior Court through the Juvenile Court and the Arizona Supreme Court through the Administrative Office of the Courts, for Title I, Special Education and other associated funds in the amount of $68,559 to support continued services for the Gila County Juvenile Detention Education Program effective upon the date of final signature through September 30, 2013.

G Acceptance of Governor Janice K. Brewer's Proclamation for the February 28, 2012, Presidential Preference Election.

H Approval of the February 28, 2012, Presidential Preference Election Precinct Consolidation Plan designating precinct consolidations, polling place locations, and mail ballot precincts with ballot replacement sites.

I Acknowledgment of the resignation of Mitch Malkovich from the Gila County Personnel Commission at the completion of his term as of December 31, 2011, and approval of the appointment of Jerry McCreary as Mr. Malkovich's replacement for a term of 4 years from January 1, 2012, through December 31, 2015.

J Approval of the corrected and current membership lists for the Arizona Correctional Officers Retirement Plan (CORP) Local Board for Gila County Sheriff's Office Detention Officers and Non-Uniformed Officers; and for the Arizona CORP Local Board for Gila County Sheriff's Office Dispatchers.

K Acknowledgement of the Human Resources weekly reports for all personnel action items approved by the County Manager for the month of December 2011, as follows: December 6, 2011, December 13, 2011, December 20, 2011, December 27, 2011.

L Approval of the March 29, 2011, April 5, 2011, May 17, 2011, and May 31, 2011, BOS meeting minutes; and September 20, 2011, BOE meeting minutes.

M Acknowledgment of contracts under $50,000, which have been approved by the County Manager for the weeks of December 10, 2011 to December 16, 2011, and December 17, 2011, to December 23, 2011.

N Approval of finance reports/demands/transfers for the weeks of December 27, 2011, January 3, 2012, and January 10, 2012.

6 **CALL TO THE PUBLIC:** Call to the Public is held for public benefit to allow individuals to address issue(s) within the Board's jurisdiction. Board members may not discuss items that are not specifically identified on the agenda. Therefore, pursuant to Arizona Revised Statute §38-431.01(G), action taken as a result of public comment will be limited to directing staff to study the matter, responding to criticism, or scheduling the matter for further discussion and decision at a future date.

7 At any time during this meeting pursuant to A.R.S. §38-431.02(K), members of the Board of Supervisors and the Chief Administrator may present a brief summary of current events. No action may be taken on issues presented.

IF SPECIAL ACCOMMODATIONS ARE NEEDED, PLEASE CONTACT THE RECEPTIONIST AT (928) 425-3231 AS EARLY AS POSSIBLE TO ARRANGE THE ACCOMMODATIONS. FOR TTY, PLEASE DIAL 7-1-1 TO REACH THE ARIZONA RELAY SERVICE AND ASK THE OPERATOR TO CONNECT YOU TO (928) 425-3231.

THE BOARD MAY VOTE TO HOLD AN EXECUTIVE SESSION FOR THE PURPOSE OF OBTAINING LEGAL ADVICE FROM THE BOARD'S ATTORNEY ON ANY MATTER LISTED ON THE AGENDA PURSUANT TO A.R.S. SECTION 38-431.03(A)((3)

THE ORDER OR DELETION OF ANY ITEM ON THIS AGENDA IS SUBJECT TO MODIFICATION AT THE MEETING

**ARF-969** **Presentation Agenda Item 2- A**

**Regular BOS Meeting**

**Meeting Date:** 01/10/2012

Submitted For: Daisy Flores, County Attorney

Submitted By: Sharon Listiak, Public Agency Courts Liaison, County Attorney

Department: County Attorney

Presenter's Name: Daisy Flores, Gila County Attorney

---

## Information

### Request/Subject

Presentation of the 2012 " I want to be an Olympic..." Calendar winners by Daisy Flores, Gila County Attorney.

### Background Information

This is the 4th calendar sponsored by the Gila County Law Enforcement Agencies to encourage school age children to remain "Drug-Free". This year's title is "I want to be an Olympic..." .

### Evaluation

N/A

### Conclusion

N/A

### Recommendation

N/A

### Suggested Motion

Presentation of the 2012 "I want to be an Olympic..." Calendar winners by Daisy Flores, Gila County Attorney.

---

## Attachments

Calendar List of Winners

**2012 GILA COUNTY LAW ENFORCEMENT CALENDAR**
**WINNERS AND HONORABLE MENTION LIST**

| | | | |
|---|---|---|---|
| **Cover** | **Mandy Williams** | **8th Grade** | **Destiny School** |
| **January** | **Shaula Newman** | **7th Grade** | **Destiny School** |
| **January** | **Lane Parrett** | **6th Grade** | **Destiny School** |
| **February** | **Demitria Boltarez** | **12th Grade** | **Hayden High School** |
| **March** | **Manuel Palafox** | **8th Grade** | **Hayden Middle School** |
| **March** | **Graciela Delgado** | **6th Grade** | **Hayden Middle School** |
| **April** | **Steven Butler** | **10th Grade** | **Hayden High School** |
| **April** | **Josh Sharp** | **7th Grade** | **Hayden Middle School** |
| **May** | **Jaida Corona** | **8th Grade** | **Hayden Middle School** |
| **May** | **Carmen Dillon** | **7th Grade** | **Destiny School** |
| **June** | **Tahni Kame** | **6th Grade** | **Hayden Middle School** |
| **June** | **Alyssa Bravo** | **3rd Grade** | **Winkleman Elem. School** |
| **July** | **Solana Pearson** | **7th Grade** | **Destiny School** |
| **August** | **Aiyana Gonzales** | **2nd Grade** | **Hayden Elem. School** |
| **August** | **Lupita Calzadillas** | **12th Grade** | **Hayden High School** |
| **September** | **Maya Batista** | **4th Grade** | **Destiny School** |
| **October** | **Marlisse Perez** | **11th Grade** | **Hayden High School** |
| **November** | **Gabrielle Victor** | **1st Grade** | **Destiny School** |
| **November** | **Jazmine Nock** | **8th Grade** | **Destiny School** |
| **December** | **Thomas Cabrera** | **12th Grade** | **Hayden High School** |

**Honorable Mention:**

| | | | |
|---|---|---|---|
| **1.** | **Arriana Estrada** | **6th Grade** | **Hayden Middle School** |
| **2.** | **Tiera Guerena** | **8th Grade** | **ILA** |
| **3.** | **Daniella Rios** | **12th Grade** | **Hayden High School** |
| **4.** | **Yvannah Gonzales** | **12th Grade** | **Hayden High School** |
| **5.** | **Joel Renteria** | **4th Grade** | **Winkleman Elem. School** |
| **6.** | **Jimena Corona** | **12th Grade** | **Hayden High School** |
| **7.** | **Angelita Casillas** | **5th Grade** | **Winkleman Elem. School** |
| **8.** | **Yuszmi Casado** | **12th Grade** | **Hayden High School** |
| **9.** | **Ramon Romero** | **8th Grade** | **Hayden Middle School** |
| **10.** | **Chantel Arbizo** | **12th Grade** | **Hayden High School** |
| **11.** | **Charlie Rose Peak** | **8th Grade** | **Destiny School** |
| **12.** | **Jonathan Jimenez** | **7th Grade** | **Hambly Middle School** |
| **13.** | **Brandon R. Cruz** | **7th Grade** | **Hambly Middle School** |
| **14.** | **Gavin Torrez** | **6th Grade** | **Hayden Middle School** |
| **15.** | **Israel Razo** | **1st Grade** | **Destiny School** |
| **16.** | **Brittney Arbizo** | **6th Grade** | **Hambly Middle School** |
| **17.** | **Elijah Dillon** | **5th Grade** | **Destiny School** |
| **18.** | **Francisca Ramos** | **1st Grade** | **Winkleman Elem. School** |
| **19.** | **Aliyana Perez** | **6th Grade** | **Hambly Middle School** |
| **20.** | **Rachel Mobley** | **5th Grade** | **Winkleman Elem. School** |
| **21.** | **Brooklyn Young** | **Kinder.** | **Hayden Elem. School** |
| **22.** | **Mary Cantrell** | **6th Grade** | **Hayden Middle School** |
| **23.** | **Angel Corso** | **2nd Grade** | **ILA** |
| **24.** | **Raymond Garcia** | **Kinder.** | **Hayden Elem. School** |

**ARF-1025** **Presentation Agenda Item 2- B**

**Regular BOS Meeting**

**Meeting Date:** 01/10/2012

Submitted For: Berthan DeNero, Human Resources Director

Submitted By: Erica Raymond, Human Resources Assistant, Human Resources

Department: Human Resources

Presenter's Name: Erica Raymond

---

Information

Request/Subject

December 2011 Spotlight on Employees Program

Background Information

The purpose of this program is to provide recognition to employees for the following qualities: teamwork, quality, morale building, integrity, customer service and initiative.

Evaluation

n/a

Conclusion

n/a

Recommendation

To allow the Human Resources Department to publicly recognize employees for December 2011 through the County's "Spotlight on Employees" Program.

Suggested Motion

Public recognition of 1 employee for December's "Spotlight on Employees" Program, as follows: Jake Garrett. **(Erica Raymond)**

---

**ARF-967** **Public Hearing 3- A**

**Regular BOS Meeting**

**Meeting Date:** 01/10/2012

Submitted For: Robert Gould, Community Development Division Director

Submitted By: Beverly Valenzuela, Executive Administrative Assistant, Community Development Division

Department: Community Development Division

Division: Community Development Administratio

Presenter's Name: Robert Gould

---

Information

Request/Subject

Adoption of Resolution No. 12-01-02 for Conditional Use Permit 11-03 for William Wait

Background Information

William R. Wait, owner/applicant, has requested a Conditional Use Permit on Assessor's tax no. 301-03-038A for continued use of portion of the garage to be used as a guest house. Property is located at 9809 W. Fossil Creek in Strawberry, AZ. Parcel is 3.27 acres and has an existing home, garage and a barn. The property is currently zoned R1, which requires that a guest house be located on the rear half of the property with a use permit. The garage is located on the northeast corner of the property, and a portion has already been converted to a guest house.

Evaluation

The intent of R1 zoning is to promote the developme of single family dwellings and all other uses should be a complement to that use. The guest house meets the size limitations set by the Zoning Ordinance. Because of the size of neighboring prperties and the existence of a road along the east side of the property, the guest house does not adversely affect neighbors.

Conclusion

The existing guest house on the property does not impede the view of neighboring properties and is not any more dense than the surrounding neighborhood.

Recommendation

The Planning and Zoning Commission held a public hearing on December 15, 2011, and recommends approval of the Conditional Use Permit because the existing garage was already been converted into a guest house and can be in compliance through the Conditional Use Permit. It is recommended that the Board of Supervisors adopt Resolution No. 11-06-07 approving Planning and Zoning Case No. CUP-11-03 with four (4) conditions:

1. Building permits shall be obtained and the conversion of the portion of the garage into the guest house shall be inspected and approved by the Building Department.

2. Owner is responsible for the fees to have a document recorded to deed that prohibits the rental, lease or sale of the guest house.

3. If additional sanitary facilities for the guest house are necessary, they shall be designed, constructed and approved according to Wastewater Department regulations.

4. Violations of any of the previous conditions shall be grounds for suspension or revocation of this Conditional Use Permit.

Suggested Motion

n

Public Hearing - Information/Discussion/Action to adopt Resolution No. 12-01-02, which approves Gila County Planning & Zoning Department Case No. CUP-11-03, an application submitted by William R. Wait for a Conditional Use Permit on Gila County Assessor's tax parcel no. 301-03-038A, located at 9809 W. Fossil Creek, Strawberry, Arizona, to allow a portion of the existing garage to be used as a guest house. **(Bob Gould)**

---

Attachments

Legal Ad

Resolution and Exhibit for CUP-11-03

Parcel Map

Site Plan

Site Pictures

Board of Supervisors Staff Report for CUP-11-03

**LEGAL NOTICE**
**GILA COUNTY**
**PLANNING & ZONING COMMISSION**
**AND**
**BOARD OF SUPERVISORS**

***NOTICE IS HEREBY GIVEN*** that the Gila County Planning & Zoning Commission will hold a public hearing on December 15, 2011; and the Board of Supervisors will hold a public hearing January 10, 2012 concerning Application CUP-11-03, filed by William Wait, the property owner. This application is a request to allow a guest house on the front section of the property in R1 zoning. The subject property is addressed as 9809 W Fossil Creek in Strawberry, parcel number 301-03-038A.

The P & Z Commission hearing will be held at 10:00 a.m. in the Payson Conference Room located at 610 E. Hwy 260, Payson, Arizona. The Board of Supervisors hearing will be held at 10:00 a.m. in the Board of Supervisors Hearing Room, 1400 E. Ash Street, Globe, Arizona and will be available for video conferencing from Payson Conference Room.

The Board of Supervisors hearing date will be continued if the Planning & Zoning Commission has not given a recommendation. Citizens may file a statement in writing for or against the Conditional Use Permit request or appear and be heard at the dates set forth. Citizens can mail their statements to the addresses listed below.

Information regarding Application CUP-11-03 will be available for review in the Gila County Community Development Departments located at 745 N Rose Mofford Way in Globe, Arizona and at 608 E. Highway 260 in Payson, Arizona. Citizens may also call the offices at 928-425-3231 EXT 8514 (Globe) or at 928-474-9276 (Payson), during normal business hours.

Planning and Zoning

By: Robert A. Gould
Robert A. Gould, Community Development Director

Board of Supervisors

By: Marilyn Brewer, Deputy Clerk
for Marian Sheppard, Clerk of the Board of Supervisors

Publications:

Arizona Silver Belt One Publication: November 30, 2011

RESOLUTION NO. 12-01-02

A RESOLUTION OF THE BOARD OF SUPERVISORS OF GILA COUNTY, ARIZONA, APPROVING GILA COUNTY PLANNING AND ZONING DEPARTMENT CASE NO. CUP-11-03, A REQUEST BY WILLIAM R. WAIT FOR A CONDITIONAL USE PERMIT ON GILA COUNTY ASSESSOR'S TAX PARCEL NO. 301-03-038A LOCATED AT 9809 W. FOSSIL CREEK, STRAWBERRY, ARIZONA.

WHEREAS, the Gila County Planning and Zoning Commission, at a duly noticed public hearing held on December 15, 2011, has recommended to the Board of Supervisors of Gila County, Arizona, that a Conditional Use Permit request, set forth in the attached Exhibit "A", be adopted as provided in Section 11-829, Arizona Revised Statutes; and

WHEREAS, after holding a public hearing as provided by law, the Board of Supervisors of Gila County, Arizona, is of the opinion that the adoption of such recommendation would be in the best interest of Gila County.

NOW, THEREFORE, BE IT RESOLVED that the Gila County Board of Supervisors, at a regularly scheduled and duly noticed public hearing did pass and adopt Gila County Planning and Zoning Department Case No. CUP-11-03, as set forth in the attached Exhibit "A" and that said zoning request become effective immediately.

PASSED AND ADOPTED this 10th day of January 2012, at Globe, Gila County, Arizona.

Attest:

GILA COUNTY BOARD OF SUPERVISORS

_____

Marian Sheppard
Chief Deputy Clerk of the Board

_____

Tommie Cline Martin, Chairman

Approved as to form:

_____

Bryan Chambers
Chief Deputy County Attorney

EXHIBIT "A"
CONDITIONAL USE PERMIT
PLANNING AND ZONING CASE NO. CUP-11-03 FOR
William R. Wait
9809 W. Fossil Creek, Strawberry, AZ
Gila County Assessor's Tax Parcel 301-03-038A

Conditional Use Permit to allow an existing structure to continue its use, garage and a portion to be used as a guest house. The property is zoned R1 and requires a guest house be located on the rear half of the property with a use permit; structure will be allowed due to the fact that the structure is existing and the location of the guest house does not impede the view of neighboring properties and is not any more dense than the surrounding neighborhood.

The following conditions shall apply; violation of any of these conditions may constitute the conditional use permit to be revoked:

1. Building permits shall be obtained and the conversion of the portion of the garage into the guest house shall be inspected and approved by the Building Department.

2. Owner is responsible for the fees to have a document recorded to deed that prohibits the rental, lease or sale of the guest house.

3. If additional sanitary facilities for the guest house are necessary, they shall be designed, constructed and approved according to Wastewater Department regulations.

4. Violations of any of the previous conditions shall be grounds for suspension or revocation of this Conditional Use Permit.

# PT S 1/2 SECTION 20 AND
# PT N 1/2 N 1/2 SECTION 29
# T 12 N R 8 E

301-03
1 of 5
CODE 1276
UPDATED 12-15-10

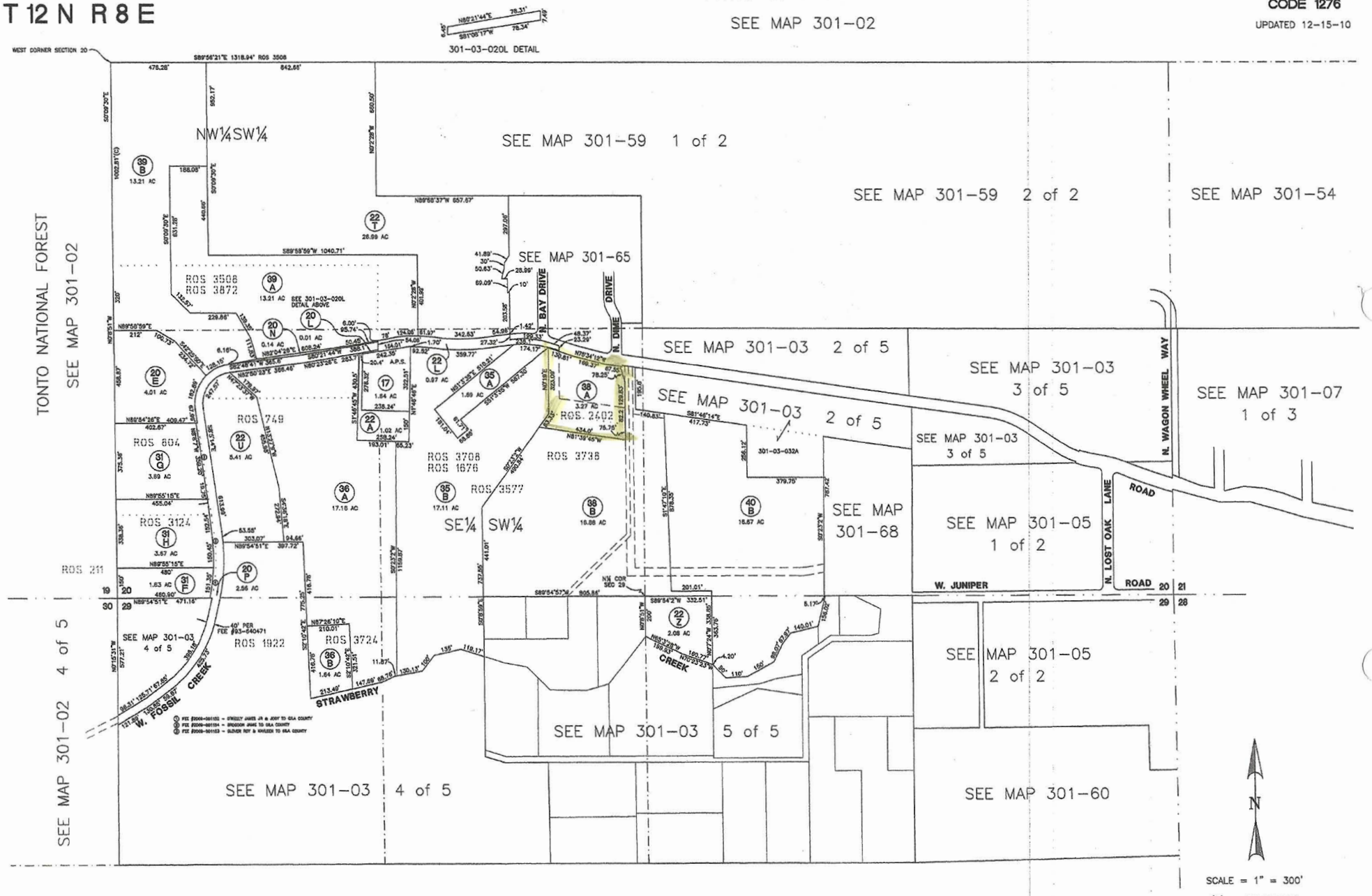


SCALE = 1" = 300'

(C) = CALCULATED
(R) = RECORDED

"FOR INFORMATION ONLY, NO LIABILITY ASSUMED."

GILA COUNTY ASSESSOR

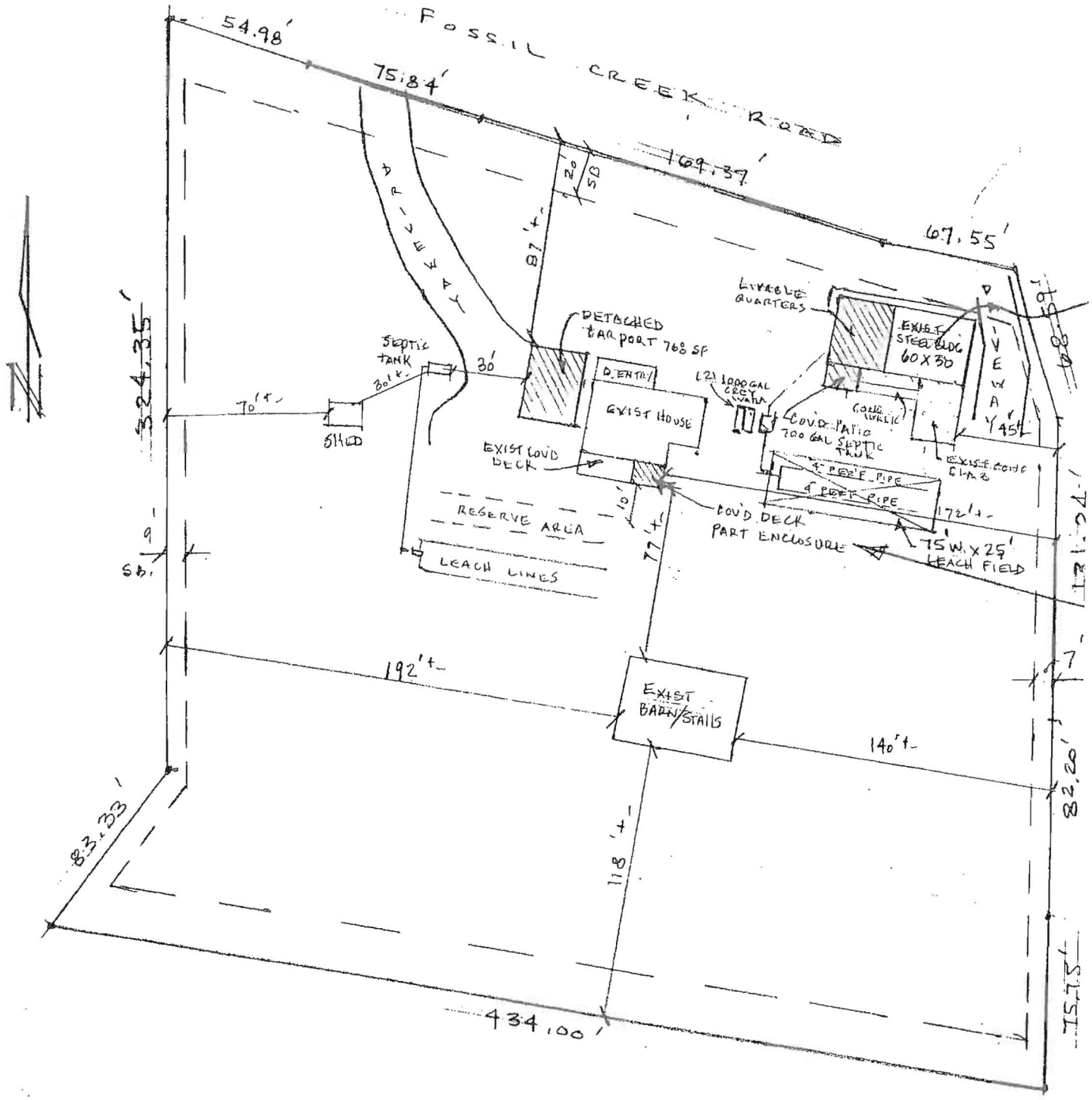


APN 301-03-038A

SITE PLAN SCALE 1"=60'

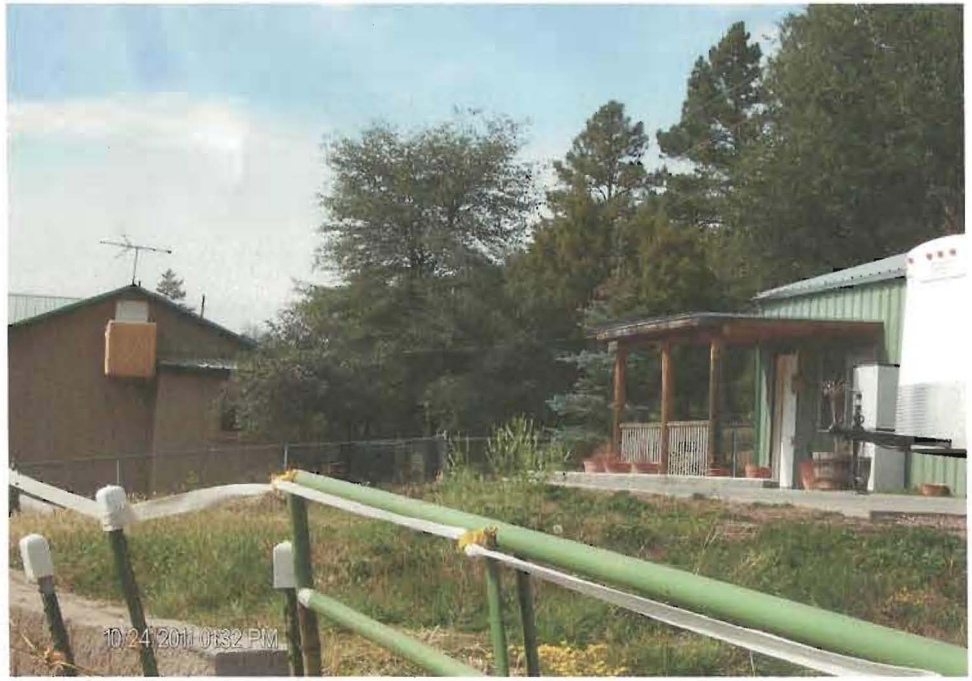
10/24/2011 01:32 PM

10/24/2011 01:34 PM

10/24/2011 01:31 PM

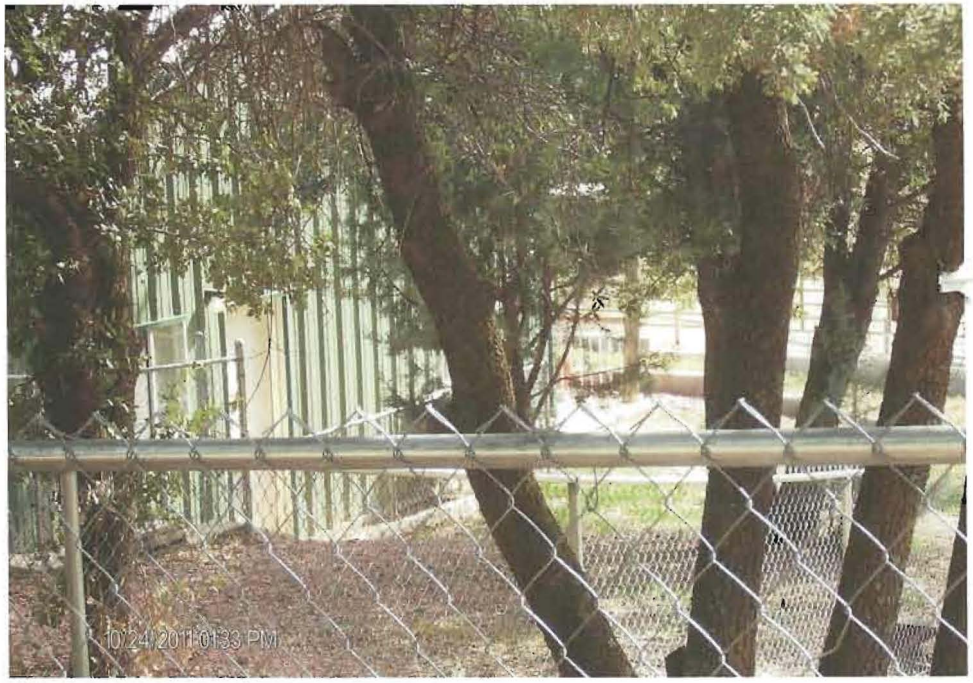
10/24/2011 01:33 PM

# Staff Report for the Gila County Board of Supervisors on Case # CUP-11-03

William Wait
9809 W Fossil Creek Rd,
Strawberry

12/15/11

A request by Mr. William Wait to allow a guest house on the front half of his property. Staff recommends approval with stipulations included in this report.

GILA COUNTY COMMUNITY DEVELOPMENT

## Background Information

The property is located at 9809 W Fossil Creek Rd in Strawberry, and is zoned R1. There is an existing home with a garage and barn also on the property, which is a 3.27 acre parcel. The garage is located on the northeast corner of the property, and a portion of the garage has been converted to a guest house (see attached site plan and floor plan).

Community Development was informed that the building had been partially converted to livable through the complaint process—the Assessor's office forwarded the information.

A neighborhood meeting to inform other property owners within 300' was held at Mr. Wait's home on October 31, 2011. There were no negative responses.

## Applicable Requirements from the Zoning Ordinance

Zoning requirements for Conditional Uses and Condition Use Permits are provided in Section 103.11 of the zoning ordinance. R1 permit requirements are in Section 104.2, Item A. See the following excerpts:

103.11

<u>CONDITIONAL USES AND CONDITIONAL USE PERMITS</u>

A. <u>GENERAL:</u>

As defined in Section 102, Conditional Uses are those uses which, although not specifically permitted in a given zoning district, would become harmonious or compatible with neighboring uses through the application and maintenance of qualifying conditions. Conditional Use Permits shall be issued setting forth all qualifying conditions subject to the procedures for rezoning found in Section 105 Amendment Procedures.

B. <u>APPLICATION:</u>

1. The applicant shall submit a Conditional Use Permit Application in the form of a narrative description of the proposed use on a form provided by the Department for that purpose.

2. Accompanying the application, the applicant shall submit a reproducible site plan on sheets not to exceed 24" by 36", at a scale not to exceed 100 feet per inch. The site plan shall contain, at a minimum, the following information: (1) The location and boundaries of the property. (2) Scale and north point. (3) The location of all existing and proposed improvements, provision for onsite parking, internal or external access. (4) Such other information as the Director may deem necessary.

C. HEARING:

1. Upon receipt of a complete application and site plan and the non-refundable application fee, a hearing on the application shall be scheduled before the Planning and Zoning Commission.

2. The Planning and Zoning Commission may either deny the application, recommend its approval subject to qualifying conditions, or return it to staff for further study prior to a rehearing.

3. Once a recommendation has been made by the Planning and Zoning Commission, a hearing on the application shall be scheduled before the Board of Supervisors.

4. The Board of Supervisors may either deny the application, accept the recommendation of the Planning and Zoning Commission, modify the recommendation, or send the application back to the Commission for further study.

5. Upon the final approval of the Board, a Conditional Use Permit shall be issued by the Department setting forth all qualifying conditions.

104.2

USE DISTRICTS (GENERAL)

A. R1 -- RESIDENCE ONE DISTRICT (Single Dwelling Units)

4. Uses Permitted Subject to a Use Permit:

a. A detached guest house appurtenant to the main dwelling only, subject to the following conditions:
   i. The guest house shall be confined to the rear one-half of the property, shall be separated from the main dwelling by at least ten (10) feet and shall be located at least ten (10) feet from the rear property line.
   ii. The total square footage of the guest house shall not exceed 800 square feet.
   iii. A deed restriction shall be recorded for the subject property which prohibits the rental, lease or sale of the guest house.

5. Uses Subject to a Conditional Use Permit:

k. Other uses which can become harmonious or compatible with neighboring uses through the application and maintenance of qualifying conditions.

## Evaluation

The addition of a guest house on a property in R1 zoning is normally allowed with a use permit on the rear half of the property. This guest house is located on the front half of the property, but because of the size of neighboring properties and the road that runs along the east side of the property, does not adversely impact neighbors.

The guest home meets the size limitations set by the Zoning Ordinance (it is less than 800 square feet). There are no floodplain issues for this parcel and wastewater has cleared the septic for the guest house use.

## Conclusion

Staff opinion is that the location of the guest house on the property does not impede the view of neighboring properties and is not any more dense than the surrounding neighborhood.

## Recommendation

On December 15, 2011 the Planning and Zoning Commission held a public hearing on CUP-11-03 and recommends approval of application CUP-11-03; that the 3.27 acre property at 9809 W Fossil Creek Rd in Strawberry, Arizona, parcel 301-03-038A be allowed continued use as a guest house on the front half of the property, subject to the following conditions:

1. Building permits shall be obtained and the conversion of the portion of the garage into the guest house shall be inspected and approved by the Building Department.

2. Owner is responsible for the fees to have a document recorded to deed that prohibits the rental, lease or sale of the guest house.

3. If additional sanitary facilities for the guest house are necessary, they shall be designed, constructed and approved according to Wastewater Department regulations.

4. Violations of any of the previous conditions shall be grounds for suspension or revocation of this Conditional Use Permit.

5. This Conditional Use Permit will be reviewed for compliance after 5 years. If there are no violations, it will be automatically renewed.

**ARF-1001** **Public Hearing 3- B**

**Regular BOS Meeting**

**Meeting Date:** 01/10/2012

Submitted For: Robert Gould, Community Development Division Director

Submitted By: Beverly Valenzuela, Executive Administrative Assistant, Community Development Division

Department: Community Development Division

Division: Community Development Administratio

Presenter's Name: Robert Gould

---

Information

Request/Subject

Table Adoption of Resolution No. 12-01-03 for Conditional Use Permit 11-02 for Applicant: William Jacobs

Background Information

William H. Jacobs, the applicant/owner, has requested a Conditional Use Permit on Assessor's tax parcel no. 302-32-031A (.18 ac +-) and 302-32-032A (.28 ac +-) that is located at 469 and 527 W. Eleanor Drive in East Verde, Payson, AZ. Applicant is requesting to use the existing two homes on adjoining properties as a church retreat. This issue first arose in 2007 when there were some complaints about the properties being used for church retreats and having too many people. A letter was issued by a staff member to address the issue (see attachment). The Community Development Department has recently received another complaint and the applicant has since then applied for this permit. The property is currently zoned R1L, which could allow property to be used as church retreat with conditions.

Evaluation

The intent of R1L zoning is to promote the development of single family dwellings and all other uses should be complementary. The church retreats are mainly on weekends once or twice a month and there is plenty of parking on the property to avoid congestion on the roadway. To make this use compatible with the single family character of the subdivision, the owner would be required to meet certain conditions.

Conclusion

Staff has visited the site and has determined that the proposed church retreat could be compatible with the surrounding land uses, and can be allowed by the Zoning Ordinance through the Conditional Use Permit process.

Recommendation

On December 15, 2011, the Planning and Zoning Commission heard this application and due to neighborhood concerns has requested that staff investigate the allegations. The Commission has tabled this item and will hear it again on January 19, 2012, at 10:00 am in the Gila County Payson Complex.

Suggested Motion

Public Hearing - Information/Discussion/Action to continue to the January 24, 2012, Board of Supervisors' regular meeting the adoption of Resolution No. 12-01-03 regarding Gila County Planning and Zoning Department Case No. CUP-11-02, an application submitted by William Jacobs for a Conditional Use Permit on Gila County Assessor's tax parcel numbers 302-32-031A and 302-32-032A located at 469 and 527 W. Eleanor in East Verde Park, Payson, Arizona, to allow parcels to be used as a church retreat.
**(Bob Gould)**

---

Attachments

n

Public Notice
Parcel Map
Site Plan
Complaint Letter from Consultant Rudy Frost
Complaint Letter from Hewlett
Complaint Letter from Hogan
Pictures of CUP-11-02
Resolution No. 12-01-03 for CUP-11-02 Applicant Willaim Jacobs
Board of Supervisors Staff Report

**LEGAL NOTICE**
**GILA COUNTY**
**PLANNING & ZONING COMMISSION**
**AND**
**BOARD OF SUPERVISORS**

***NOTICE IS HEREBY GIVEN*** that the Gila County Planning & Zoning Commission will hold a public hearing on December 15, 2011; and the Board of Supervisors will hold a public hearing on January 10, 2011 concerning Application CUP-11-02, filed by William Jacobs, the property owner. This application is a request to allow use of the house as a retreat for between ten and thirty persons for a day or two at a time. The subject property is addressed as 469 W Eleanor Drive in East Verde Estates, parcel number 302-32-031A.

The P & Z Commission hearing will be held at 10:00 a.m. in the Payson Conference Room located at 610 E. Hwy 260, Payson, Arizona. The Board of Supervisors hearing will be held January 10, 2012 at 10:00 a.m. in the Board of Supervisors Hearing Room, 1400 E. Ash Street, Globe, Arizona and will be available for video conferencing from the Payson Conference Room.

The Board of Supervisors hearing date will be continued if the Planning & Zoning Commission has not given a recommendation. Citizens may file a statement in writing for or against the Conditional Use Permit request or appear and be heard at the dates set forth. Citizens can mail their statements to the addresses listed below.

Information regarding Application CUP-11-02 will be available for review in the Gila County Community Development Departments located at 745 N Rose Mofford Way in Globe, Arizona and at 608 E. Highway 260 in Payson, Arizona. Citizens may also call the offices at 928-425-3231 EXT 8514 (Globe) or at 928-474-9276 (Payson), during normal business hours.

Planning and Zoning

By: Robert A Gould
Robert A. Gould, Community Development Director

Board of Supervisors

By: Marilyn Greener, Deputy Clerk
for Marian Sheppard, Clerk of the Board of Supervisors

Publications:

Arizona Silver Belt One Publication: November 30, 2011

PT SE 1/4 SECTION 18
T11N R10E

302-32
1 of 2
CODE 1082
UPDATED 10-21-11

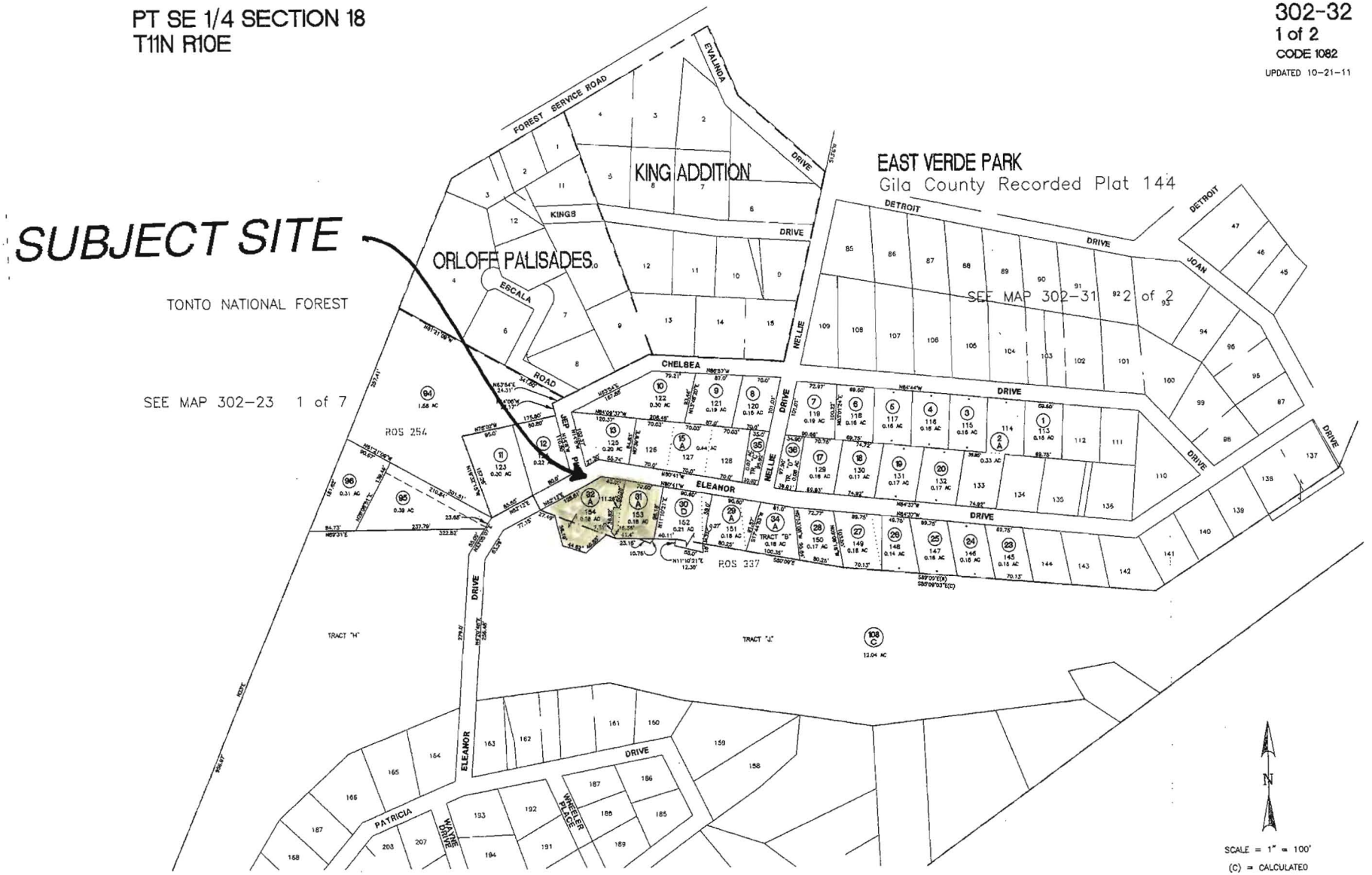


EAST VERDE PARK PLAT TWO
Gila County Recorded Plat 148

SEE MAP 302-32 2 of 2

"FOR INFORMATION ONLY, NO LIABILITY ASSUMED."

GILA COUNTY ASSESSOR

ELEANOR DRIVE

| | |
|---|---|
| Parcel Number: | 302-32-03 |
| Zoning: | R1 |
| Legal Description: | FAB |
| Lot Area: | 7,799 S.F. |
| Building s.f.: | EXIST. HO<br>NEW ADD<br>NEW FRO<br>NEW REA |

| Setbacks: | ALLOWED |
|---|---|
| FRONT | 20' |
| SIDE | 8' |
| SIDE | 7' |
| REAR | 20' |

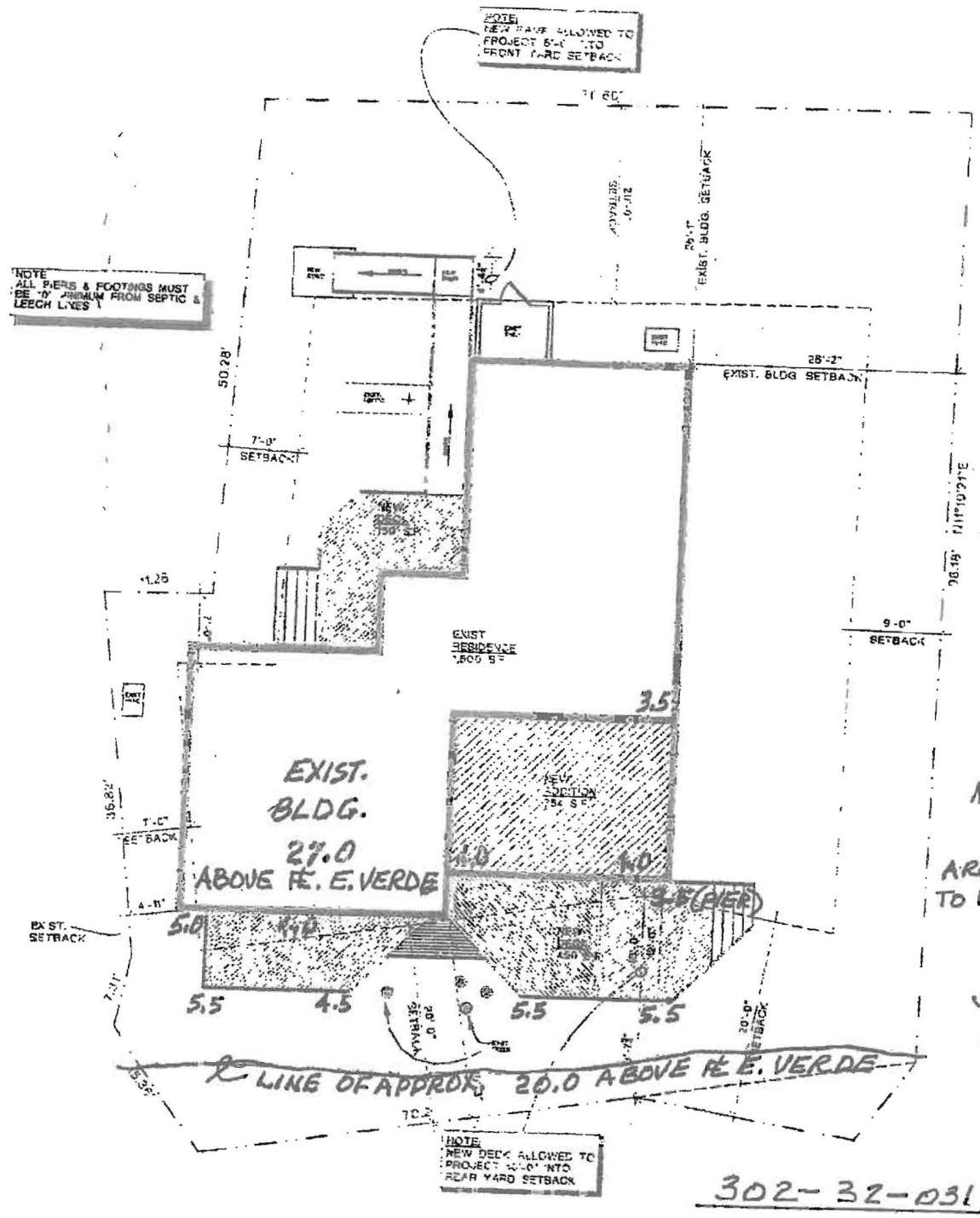


## SHEET INDE

| | |
|---|---|
| A1.0 | SITE PLAN |
| A2.0 | DEMOLITION P |
| A2.1 | FOUNDATION<br>ROOF FRAMIN |
| A2.2 | ROOF PLAN / |
| A2.3 | POWER PLAN |
| A3.0 | BUILDING ELEV |
| A3.1 | BUILDING SEC |
| A4.0 | DETAILS |
| E1.0 | ELECTRICAL IN |

NOTES:

FIGURES SHOWN ARE BELOW THRESHOLD TO EXISTING GROUND

Raymond Lee Jones
L.S. 5713
6/14/11

302-32-031A

REGISTERED LAND SURVEYOR
CERTIFICATE NO.
5713
RAYMOND LEE JONES
Date Signed 6/14/11
ARIZONA, U.S.A.
EXP. 6/30/12

## SITE PLAN

SCALE 1/8"=1'-0"

RECEIVED
JUN 14 2011
GILA CO. COM. DEV. FLOODPLAIN

MAILED 9/24/07 @ 3:00±

1400 East Ash Street
Globe Arizona 85501
(928)425-3231 Ext. 8512
FAX (928)425-0829

714 S. Beeline Hwy, Suite 200
Payson, Arizona 85541
(928)474-9276
FAX (928)474-0802

# GILA COUNTY COMMUNITY DEVELOPMENT

Robert Gould, Director

September 24, 2007

William & Mary Jacobs
1821 E. Carver Road
Tempe, AZ 85284

Dear William and Mary,

I am writing to you because of concerns expressed by some of your neighbors in East Verde Park. It is their understanding that you intend to utilize tax parcel 302-32-031A, being lot 153 of East Verde Park Subdivision, for "church retreats". They have concerns about the numbers of people, the parking, the impact on common use areas, the impact on water resources and the impact on sanitary facilities.

Please be aware that the subject parcel, 302-32-031A, is within a R1L-D12 zoning district. The primary use in this district is single family dwellings with quiet family living. Church retreats are not an outright permitted use. The church retreat use might be legally established with an approved Conditional Use Permit. Basically, with a Conditional Use Permit request, the property owner provides a property use plan that demonstrates that a proposed use could be harmonious and compatible with adjoining land uses, when specific conditions are maintained. I am enclosing the necessary forms in case you wish to apply.

Also, be aware that a number of land use activities are recognized as customary, accessory and incidental to the primary use, when intermittent and with minimal adverse impacts to adjoining properties. Examples of customary land use activities where citizen congregate are: yard sales, weddings, wakes, baby showers, Tupperware parties and bridge clubs. If your church retreats are one weekend a month, generally indoors and are causing no adverse impacts; "access ways being block by parked vehicles, excessive noise, lighting or smoke", then your activity is considered an accessory use. If you intend to hold the retreats more often than one weekend per month, then I suggest the Conditional Use Permit process.

If you have questions or need assistance with the Conditional Use Permit application, then please contact me at 928-474-7111 on any Monday, Tuesday or Wednesday and I will be happy to assist as I can.

Sincerely,

Rudy Frost

Rudy Frost

cc: Margie Chapman

August 25th 2011

To Whom It May Concern:

The property address 469 W Eleanor, in East Verde Park has had plenty of issue with the owner and what he as a Self Ordained Mister.

1.) When Mr. Jacob purchase the two homes down by the second crossing on Eleanor , without asking or having a surveyor moved his fence line into the EVP estates property , and he did not move it for three months, or
2.) Until he (Jacob) was by the Gila county, he (Jacob) could not have a retreat, on single family home dwelling now;
3.) Approximately, three (3) years later he (Jacob) is again requesting these two homes be upgrade to a business property. Which must be turn down by, the volume of illegal Mexicans that ICE has in the past picked up.
4.) These two home are vacant during the week and he is bring illegal's here in East Verde Park on the Weekends.
5.) The last bunch of illegals, one stated he was paying for the stay at these two home.
6.) My big problem is 20 to ~~eight~~ 80 illegal or not illegal under the Single Family home criteria and the Septic tank is only large enough for single dwelling, should be turned down.
7.) Mr. Jacob is running a business out of these two homes, and that is not permitted. Yes;
8.) We do have a business in the community called the Rock House Bed and Breakfast that can only have four individual at a time for let's say a weekend, because of the single dwelling situation, also exists.
9.) Also, for your information, I have called numerous times the sheriff Office and ICE on these illegal be brought into these to home in the past year. Whereas
10.) One neighbor caught the illegal peeing in the East Verde River, and when that woman address him on what he was doing he turn and show his genital to that lady. Also;
11.) That same weekend east of the two homes with illegal, that home owner (Patty) caught the illegal in her backyard and her neighbor Judy, helped Patty chase these illegal out of her backyard.
12.) Understand, Illegal's I would not call any individual names, but why I'm using the word Illegal is that ICE and Sheriff department said they have NO green card or ID and they do not speak English and they said they were illegal's
    - I'm only following on what I was told.
13.) East Verde Estates/river area is for only, home owner or their friends and relatives, not for retreats of any source of large number of individuals, meaning:

14.) With these retreat the home owner has had the other home owner along the river had to pick trash from the number that were in these weekend retreat in our own East Verde River area. Plus;

15.) Because of the number of individual showing at these two homes, the illegal's did not have enough room for all the trash, so that was also scattered in his two home driveway of Mr. Jacob, and a lot of the trash was placed in neighboring homes around Mr. Jacob two home, whereas the neighbors did not have enough room for their trash.

16.) As a Christian, I have been the board of my church, whereas I vote on a retreat, but I also had the understanding a retreat must be zoned for this type of activity. Whereas;

17.) Mr. Jacob properties, is not big enough for this number of individual that are paying for the retreat, and so the extra room for bunk bed his going to be a major problem in this East Verde Estates along the river.

Respectfully

Thank You

East Verde Property owner

C. R. Hewlett

928-468-6364

Handed out at P/Z Dec 15, 2011 mtg

**Valenzuela, Beverly**

**From:** Gould, Robert
**Sent:** Wednesday, December 14, 2011 3:14 PM
**To:** Valenzuela, Beverly
**Subject:** FW: Dec 15 hearing for CUP-11-02

**From:** Ardith & Ken Hogan [mailto:azhogans@gmail.com]
**Sent:** Wednesday, December 14, 2011 1:11 PM
**To:** Gould, Robert
**Subject:** Dec 15 hearing for CUP-11-02

Dear Robert A. Gould

We would like to express our opposition to the granting of a conditional use permit to allow a church retreat in T1L zoning, CUP-11-02. Although we support the right of a homeowner to entertain guests in their home anytime they wish and for any reason, this case is a little different. Please let us explain:

1. Owners William and Mary Jacobs have stated that they will not be present when these guests are present. Guests will not have any idea where property boundaries are, nor will they be familiar with the community rules regarding parking, use of common land along the river, trash disposal, water usage, etc.

2. Owners have stated that their monthly water usage is similar to that of permanent residents. However if that entire monthly usage occurs over one weekend, especially when we are at a level 4, the water supply for the entire community could be threatened. The Jacobs have offered to cancel the retreat if a level 4 is posted, but we are never given advance warning as to when this will occur. Guests would already be en route when the level is posted.

3. Most importantly, up to 30 guests can produce a lot of garbage. Their choices for disposal are limited. Upon leaving, they may fill cans and leave them on the street for weekly pickup, or they may fill cans and leave them on the premises. Either way, raccoons, javelinas, roaming dogs, coyotes, etc will scatter that trash throughout the community causing an eyesore and/or health threat. Community members should not be responsible for cleaning up after unattended guests, nor fear attacks by raccoons, javelinas or coyotes that have become accustomed to free handouts near the Jacobs' property.

Although we fully support the idea of a church offering a chance for peaceful reflection and retreat, this is not the appropriate place to do so. Thank you for the opportunity to express our opinion.

Ken and Ardith Hogan
343 W Eleanor Dr.
Payson, Az 85541

--
Ken and Ardith Hogan

10/05/2011 02:08 PM

RESOLUTION NO. 12-01-03

A RESOLUTION OF THE BOARD OF SUPERVISORS OF GILA COUNTY, ARIZONA, APPROVING GILA COUNTY PLANNING AND ZONING DEPARTMENT CASE NO. CUP-11-02, A REQUEST BY WILLIAM H. JACOBS FOR A CONDITIONAL USE PERMIT ON GILA COUNTY ASSESSOR'S TAX PARCEL NUMBERS 302-32-031A AND 302-32-032A AND ARE LOCATED AT 469 W. ELEANOR DRIVE IN EAST VERDE PARK, PAYSON, ARIZONA.

WHEREAS, the Gila County Planning and Zoning Commission, at a duly noticed public hearing held on December 15, 2011, has recommended to the Board of Supervisors of Gila County, Arizona, that a Conditional Use Permit request, set forth in the attached Exhibit "A", be adopted as provided in Section 11-829, Arizona Revised Statutes; and

WHEREAS, after holding a public hearing as provided by law, the Board of Supervisors of Gila County, Arizona, is of the opinion that the adoption of such recommendation would be in the best interest of Gila County.

NOW, THEREFORE, BE IT RESOLVED that the Gila County Board of Supervisors, at a regularly scheduled and duly noticed public hearing did pass and adopt Gila County Planning and Zoning Department Case No. CUP-11-02, as set forth in the attached Exhibit "A" and that said zoning request become effective immediately.

PASSED AND ADOPTED this 10th day of January 2012, at Globe, Gila County, Arizona.

Attest:

GILA COUNTY BOARD OF SUPERVISORS

_____

Marian Sheppard
Chief Deputy Clerk of the Board

_____

Tommie Cline Martin, Chairman

Approved as to form:

_____

Bryan Chambers
Chief Deputy County Attorney

EXHIBIT "A"
CONDITIONAL USE PERMIT
PLANNING AND ZONING CASE NO. CUP-11-02 FOR
William H. Jacobs
469 and 527 W. Eleanor in East Verde Park, AZ
Gila County Assessor's Tax Parcel Numbers 302-32-031A and 302-32-032A

Conditional Use Permit to allow two existing homes on adjoining properties to be used as a church retreat. Property is currently zoned R1L and is designed to promote the development of areas primarily of site-built single family detached dwellings, intending that all other uses be installed, operated and maintained in a manner so as to complement and cause a minimum disruption to such single family uses. Any use not in accordance with the intent and purpose, district stipulations and provisions and permitted uses as set forth in this section shall be deemed a nuisance.

The following conditions shall apply; violation of any of these conditions may constitute the conditional use permit to be revoked:

1. The maximum duration of stay for any one guest shall be three (3) days. Guests under the age of 18 shall be supervised.
2. The maximum occupancy for each house at any time shall be as established by the Building and Fire Codes based on the proposed use. Owner shall submit floor plans for review. The maximum number of people allowed at retreats is 20 total or 10 people per unit.
3. All parking must be accommodated on the site.
4. Owner to make provisions for the prompt cleanup and disposal of trash.
5. ADA requirements shall apply. An inspection will be conducted to determine the extent of the requirements.
6. Owner to comply with wastewater requirements for the church retreat use.
7. A local contact person shall be available if any issues arise concerning the properties.
8. Noise shall not be disruptive to neighboring properties. Group activities held outside the buildings shall not be held prior to 8:00 am or after 10:00 pm.
9. Any applicable State and County Health Department regulations shall be complied with, and all required permits must be obtained and remain valid so long as the use is in operation. It is the owners' responsibility to check these regulations to see if they apply.
10. This Conditional Use Permit will not be in effect until all of the above requirements have been met.
11. Violations of any of the previous conditions shall be grounds for suspension or revocation of this Conditional Use Permit.

**DATE:** **December 15, 2011**

**TO:** **Board of Supervisors**

**FROM:** **Gila County Community Development**

**REQUEST/SUBJECT:** **CUP-11-02; a request to allow a church retreat in R1L zoning**

Background Information: There are two existing homes on adjoining properties, addressed as 469 & 527 W Eleanor in East Verde Park, parcel numbers 302-32-031A and 302-32-032A. This issue first arose in 2007 when there were some complaints about the properties being used for church retreats and having too many people. A letter was issued by a staff member to address the issue (see attachment). The Community Development Division has recently received another complaint, so the owners initiated the Conditional Use Permit process.
The property is zoned R1L, which could allow a church retreat use with stipulations through a Conditional Use Permit.

Evaluation: The intent of the R1L zoning is to promote the development of single family dwellings and all other uses should be complementary. The church retreats are mainly on weekends once or twice a month and there is plenty of parking on the property to avoid congestion on the roadway. To make this use compatible with the single family character of the subdivision, the owners would be required to meet certain stipulations such as limiting the number of people allowed at each retreat.

Conclusion: The proposed church retreat could be compatible with the surrounding land uses, and can be allowed by the Zoning Ordinance through the Conditional Use Permit process.

**This CUP was tabled by the P&Z Commission until the next meeting (January 19, 2012).**

**ARF-1032** **Regular Agenda Item 4- A**

**Regular BOS Meeting**

**Meeting Date:** 01/10/2012

Submitted By: Marian Sheppard, Chief Deputy Clerk, BOS, Clerk of the Board of Supervisors

Department: Clerk of the Board of Supervisors

Presenter's Name: Adam Hawkins

---

## Information

### Request/Subject

Resolution Copper seeks an updated resolution of support from the Gila County Board of Supervisors for HR1904, the Southeast Arizona Land Exchange and Conservation Act and their ongoing operations, located 3 miles east of Superior.

### Background Information

The Gila County Board of Supervisors has passed similar resolutions supporting this action over the past few years. The United States House of Representatives has passed HR1904. The bill is currently under consideration by the Senate.

### Evaluation

Resolution Copper is a deep underground copper orebody – one of the largest in the world and estimated to produce enough to supply somewhere between 25 to 30% of the domestic demand for copper. Between direct, indirect and induced employment, Resolution Copper will create more than 3,700 jobs – spanning for more than half a century. With an estimated economic impact of $61.4 billion, Resolution Copper is among the largest economic development projects in the southwestern United States.

### Conclusion

With more than $20 billion in tax input to local, county, state and federal governments, Resolution Copper is a major force in the economic vitality of the region.

### Recommendation

The manager and staff respectfully recommend the Board adopt the resolution.

### Suggested Motion

Information/Discussion/Action to adopt Resolution No. 12-01-04, supporting HR1904, the Southeast Arizona Land Exchange and Conservation Act, Resolution Copper's extensive reclamation of the historic Magma Mine in Superior, their contributions to the local economy and the potential for the Copper Triangle to become one of the largest copper producing regions in the world. **(Adam Hawkins)**

---

## Attachments

Resolution No. 12-01-04

**RESOLUTION NO. 12-01-04**

**A RESOLUTION OF THE GILA COUNTY BOARD OF SUPERVISORS EXPRESSING SUPPORT FOR THE SOUTHEAST ARIZONA LAND EXCHANGE AND CONSERVATION ACT APPLAUDING THE HOUSE OF REPRESENTATIVES FOR THE PASSAGE OF THE LEGISLATION AND URGING THE UNITED STATES SENATE TO PROMPTLY ENACT THE BILL AND RECOGNIZING RESOLUTION COPPER COMPANY FOR ITS INVESTMENTS AND EFFORTS TO DEVELOP A NEW COPPER MINE AND ENHANCE THE LOCAL, STATE AND NATIONAL ECONOMIES**

**WHEREAS,** the Gila County Board of Supervisors recognizes the importance of regional economic development; and

**WHEREAS,** the Gila County Board of Supervisors recognizes the significant role that Copper Mining has played in the history of our area and the State of Arizona for more than 100 years; and

**WHEREAS,** Resolution Copper is actively engaged in the development of an environmentally sound, socially responsible underground mining project in and around the Oak Flat area east of the Town of Superior; and

**WHEREAS,** the Gila County Board of Supervisors understands the importance of the Southeast Arizona Land Exchange and Conservation Act and Arizona's economic future and urges Congress to expeditiously pass this legislation; and

**WHEREAS,** the Gila County Board of Supervisors understands the potential positive and negative cultural and financial impacts associated with these bills and the proposed Copper Mine.

**NOW, THEREFORE, BE IT RESOLVED** that the full body of the Gila County Board of Supervisors hereby declare their full support for the Southeast Arizona Land Exchange and Conservation Act and the development of the Resolution Copper Mine.

**PASSED AND ADOPTED** this 10th day of January 2012, at Globe, Gila County, Arizona

Attest: **GILA COUNTY BOARD OF SUPERVISORS**

_____ _____

Marian Sheppard
Chief Deputy Clerk of the Board

Tommie C. Martin, Chairman

Approved as to form:

_____

Bryan Chambers
Chief Deputy County Attorney

**ARF-1024** **Regular Agenda Item 4- B**

**Regular BOS Meeting**

**Meeting Date:** 01/10/2012

| | | | |
|---|---|---|---|
| Submitted For: | Darde DeRoulhac, Flood Control District Chief Engineer | Submitted By: | Darde DeRoulhac, Flood Control District Chief Engineer, Public Works Division |
| Department: | Public Works Division | Division: | Floodplain |
| Presenter's Name: | Steve Sanders / Darde de Roulhac | | |

Information

Request/Subject

Request from Rickie Wood for a variance to the Gila County Floodplain Management Ordinance, to wet-floodproof an existing 896 square foot garage building in lieu of elevating the floor to or above the regulatory flood elevation, to bring it into compliance with floodplain criteria. This building is located on Parcel Number 304-31-035 in Gisela, Arizona.

Background Information

This request is being made under the provisions of Section 6.3 of the Gil County Floodplain Management Ordinance for a variance to allow wet-floodproofing for a detached accessory building, to be used solely for parking and storage, with the lowest floor elevation 2.1 feet below the regulatory flood elevation. A variance is required, since the building is larger than the 600 square feet maximum size allowed for a detached accessory building to be wet-floodproofed under the currently-effective Gila County Floodplain Management Ordinance.

After consultation with County staff and being advised of the floodplain requirements, the applicant constructed the building without a permit, with the floor elevation 2.1 feet below the regulatory flood elevation, with no provisions for flood vents to equalize water pressure on both sides of the walls, and without using flood-resistant materials below the regulatory flood elevation. Two cases were referred to the Hearing Officer, one for the floodplain ordinance violation, and one for construction without a building permit. The applicant also applied to the Board for a floodplain variance to waive floodplain requirements on April 19, 2011. specifically, the request was for a variance from the need for a floodplain use permit before construction, and a variance from the requirements of Section 5 (Provisions for Flood Hazard Reduction) in the ordinance. That variance request was denied.

Mr. Wood now desires to retrofit the structure to bring it into compliance with the Provisions for Flood Hazard Reduction. The proposed retrofit consists of the removal of the exterior siding on the wood frame structure up to 0.5 feet above the regulatory flood elevation, treatment of the wooden wall framing with a marine wood waterproofing product, replacement of the vapor permeable membrane, the installation of concrete siding board where the wood siding is to be removed, and the installation of permanent unobstructed screened openings ("flood vents") in the concrete siding. This will meet the construction criteria for flood damage reduction by wet-floodproofing, which is allowed by the Gila County Floodplain Management Ordinance for accessory buildings up to 600 square feet. However, in order to be able to use the wet-floodproofing techniques on a detached accessory building over 600 square feet in area, a variance is required from the Floodplain Board. Therefore, Mr. Wood is requesting a variance so that a Floodplain Use Permit can be issued to retrofit the building to comply as much as possible with the flood hazard reduction provisions of the ordinance.

A plan is attached to show the proposed building modifications.

Evaluation

This variance would permit a building which is non-compliant with the floodplain regulations, to be brought into compliance as much as possible with the flood hazard reduction provisions of the Gila County Floodplain Management Ordinance. Without a variance, the existing non-compliant structure would be at a greater risk of damage from flooding.
Mr. Wood is proposing four 14-inch by 18-inch flood vents, with the bottom of the vents approximately four inches above the elevation of the top of the concrete floor slab. The vents are to be screened with a galvanized wire mesh screen containing square openings in the mesh approximately one-half inch on a side. The total area of the flood vents exceeds the minimum area required by the ordinance for the building size.

Mr. Wood states in his variance request that the building will never be used for purposes other than parking or storage. Buildings used for other purposes are not allowed to be wet-floodproofed under the floodplain ordinance. Mr. Wood further states that he understands that any electrical or mechanical equipment, if added later, would need to be authorized by a floodplain use permit, and would need to be elevated above the regulatory flood elevation.

This building is located within the regulatory floodplain, but not within the portion of the floodplain designated as floodway. Therefore, the building is allowed to be constructed without an engineering analysis to show no rise in the 100-year flood level, which would be required if in a floodway.

The Building Department staff has also reviewed the plan and state that this retrofit appears to be in compliance with the Building Code, so that a building Permit could also be issued for the work, if a floodplain variance is obtained.

Conclusion

A variance would be necessary to retrofit this existing building to comply with the flood hazard reduction criteria allowed by the Gila County Floodplain Management Ordinance. The plans also appear to comply with the requirements of the Building Code adopted by Gila County.

Recommendation

Staff recommends that the Board approve this variance to allow retrofitted wet-floodproofing of an existing building to make it more resistant to damage from flooding.

Suggested Motion

**(Motion to adjourn as the Gila County Board of Supervisors and convene as the Gila County Flood Control District Board of Directors.)**
Information/Discussion/Action to approve a variance from Section 5.2.C of the Gila County Floodplain Management Ordinance to allow Rickie Wood to retrofit an 896 square foot garage to be used solely for parking and storage, with the lowest floor elevation 2.1 feet below the regulatory flood elevation, and providing a degree of flood protection for the building by using flood-resistant materials below the regulatory flood elevation, and by providing permanent unobstructed openings to allow the water pressure to equalize on both sides of the walls to reduce the probability of wall collapse from water pressure.
**(Steve Sanders/Darde de Roulhac) (Motion to adjourn as the Gila County Flood Control District Board of Directors and reconvene as the Gila County Board of Supervisors.)**

---

Attachments

Existing Building Photo

Area Floodplain Exhibit
Plan
Vent detail
Marine Wood Sealant Specs
Concrete Paneling Brochure

7

# Gisela 304-31-035 wood

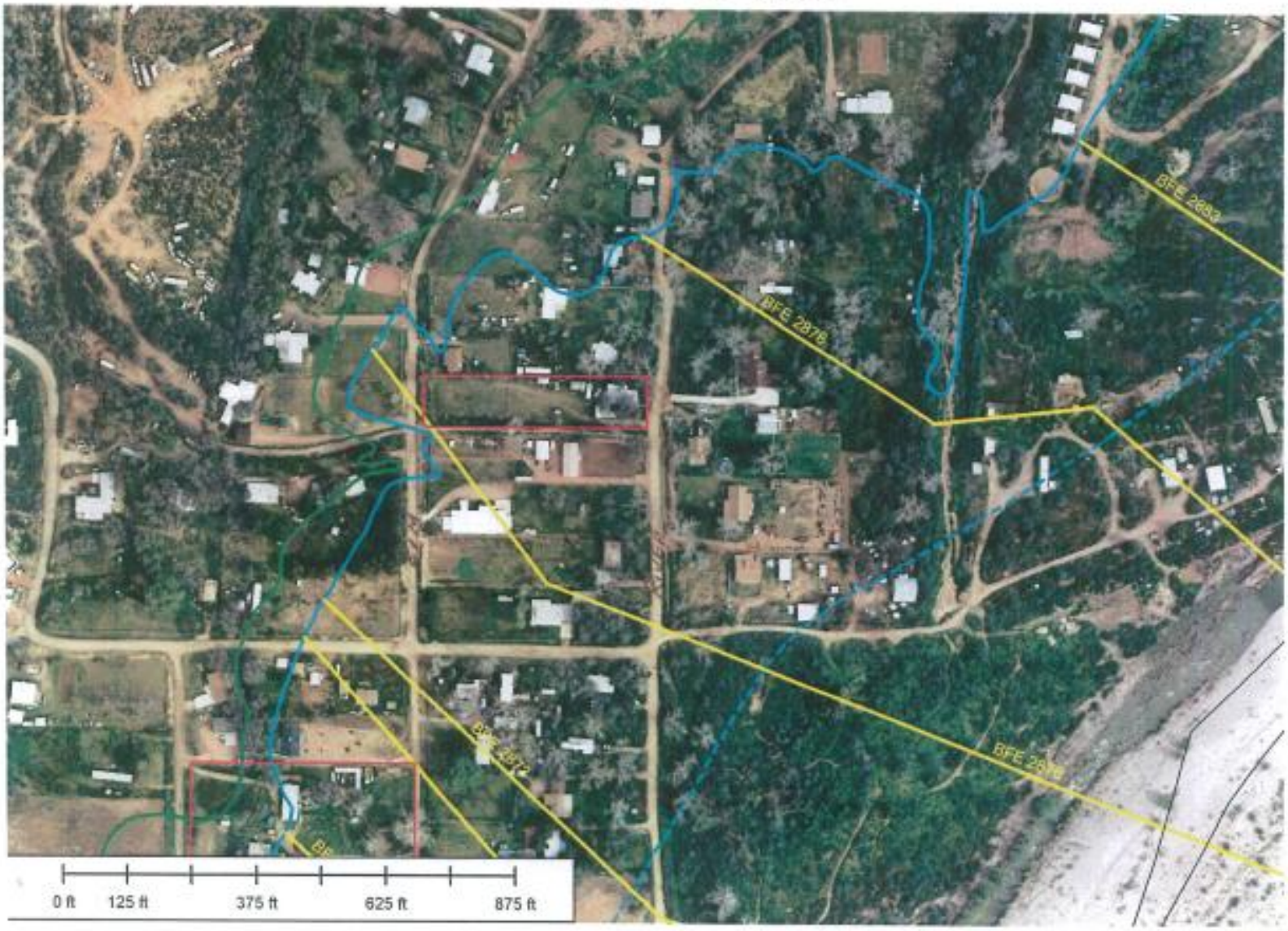

RECEIVED
DEC 12 2011
GILA CO. COM. DEV. FLOODPLAIN

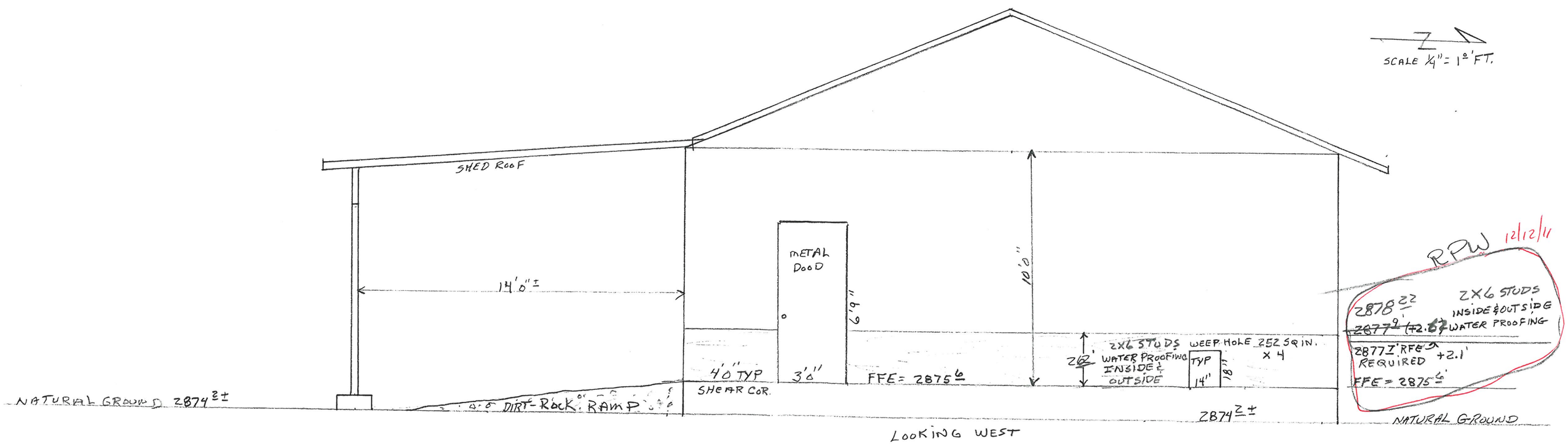

FOR RICK WOOD
GISELA
304-31-035

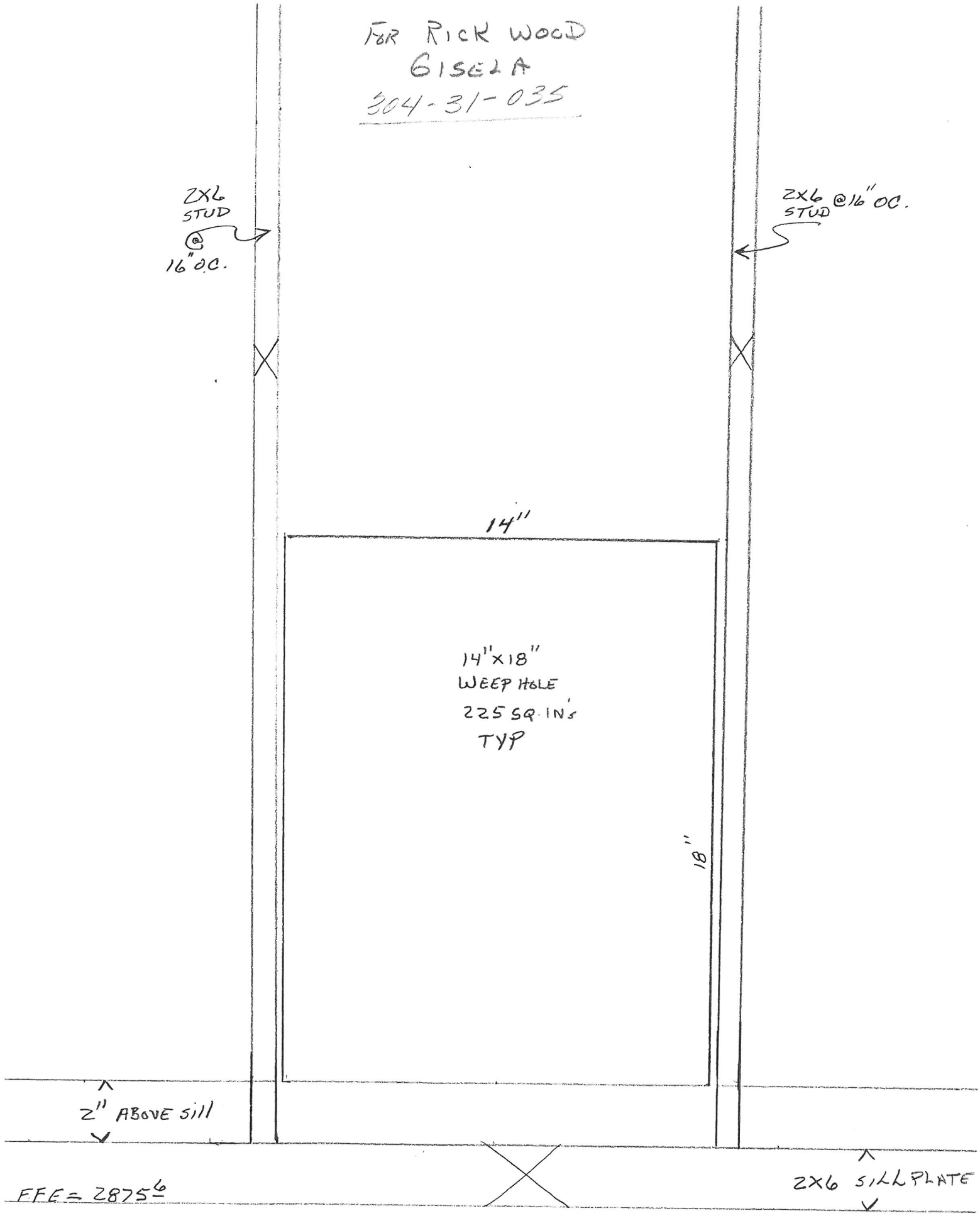

# SEAL-ONCE™

GreenSpec LISTED

NEW IMAGE COATINGS

**The water stops here.**

Welcome 12/12/2011

CLEANERS

CONCRETE WATERPROOFERS

WOOD / COMPOSITE WATERPROOFERS

WHERE TO PURCHASE

TINTED FORMULAS

PRODUCT INFORMATION

## Seal-Once™ long-lasting, deep penetrating formulas outperform other sealers and stains.

### Seal-Once™ Technical Specifications

Seal-Once™ waterproofers are advanced aqueous formulas designed primarily for waterproofing wood, concrete and masonry and composite decking. Seal-Once provides years of protection and does an exceptional job of limiting moisture ingress, as well as reducing fungal and microbial attack by reducing available moisture. Seal-Once is colorless and will not discolor wood, concrete or masonry. Seal-Once is available in clear and tinted formulas by adding one package of tint per gallon.

Contains no toxins or heavy metals
Seal-Once does not contain nitrates or phosphorous compounds. Seal-Once also does not contain any aluminum, arsenic, barium, cadmium, chromium, copper, lead, mercury or other heavy metals. It does not contain silica. There is an internal chemistry which is designed to facilitate bonding to wood and cementitious substrates.

Approved safe for use over fresh and saltwater
When Seal-Once dries on a substrate, it does not leach out or become hydrolytically unstable, however it may be removed by wearing the substrate away or by application of strong oxidizers. Seal-Once is approved by the State of N.H. Department of Environmental Services (DES) for use over water.

Physical Characteristics

| | |
|---|---|
| Color | Milky White |
| Flash pt. | None |
| pH | 7.4 |
| Solvents | None |
| Specific Gravity | .993 |
| Application Temp. | 35°F and above |
| Solid Content | 34%+ |
| VOC's | No Regulated VOC's |
| Air Pollutants | None |
| Odor | Very low |
| Boiling Point | >100° C (>212°F) |
| Solid Content | 32% |

Recommended Usage
Wood (all types)/Composite: Decks, Fences, Docks, Piers, Shingles, Shingle Siding, Wood Playgrounds, Planters, Furniture, Cedar Siding, Roofs

Concrete: Walkways, Driveways, Curbs, Steps, Ramps, Chimneys, Platforms, Loading Docks, Ramps, Floors, Parking Decks

Other: Stucco, Brick, Tile (Unglazed), Limestone, Granite, Slate, Gravestones

Features
- Water-Based and Non-Flammable
- Contains No TAPS/HAPS (Toxic/Hazardous Air Pollutants)

- VOC Content N/A, Non-Ozone Depleting
- Not Regulated by Authorities for Worker Health and Safety
- Not Regulated by Authorities for Transportation and Storage
- Will Not Harm Fish, Plants, Pets or Livestock
- Will Not Burn Skin; Odorless
- Safe for Use Over Fresh and/or Saltwater

Benefits

- Reduces Fungal Microbial Attack
- Will Not Discolor Wood or Masonry Surfaces
- UV Transparent, Paintable or Stainable
- Excellent Durability to Weathering
- Excellent Longevity, Preserves Wood
- Reduces Spalling and Cracks Caused by Moisture
- Outperforms Other Sealers and Stains
- Cost Effective

TECHNICAL DATA

Application

- See links to individual formulas for application specifications.

NIC

The water stops here

Made in the USA.
Manufactured & Distributed by
New Image Coatings, LLC
Manchester, NH 03101
©2011 New Image Coatings, LLC

# HardiePanel® HZ5™ Vertical Siding

**JamesHardie**

EFFECTIVE AUGUST 2009

## ABBREVIATED INSTALLATION REQUIREMENTS – For complete instructions visit www.jameshardie.com

IMPORTANT: FAILURE TO INSTALL AND FINISH THIS PRODUCT IN ACCORDANCE WITH APPLICABLE BUILDING CODES AND JAMES HARDIE WRITTEN APPLICATION INSTRUCTIONS MAY LEAD TO PERSONAL INJURY, AFFECT SYSTEM PERFORMANCE, VIOLATE LOCAL BUILDING CODES, AND VOID THE PRODUCT ONLY WARRANTY. BEFORE INSTALLATION, CONFIRM THAT YOU ARE USING THE CORRECT HARDIEZONE™ PRODUCT INSTRUCTIONS. TO DETERMINE WHICH HARDIEZONE APPLIES TO YOUR LOCATION, VISIT WWW.HARDIEZONE.COM OR CALL 1-866-942-7343 (866 9HARDIE)

### STORAGE & HANDLING:

Store flat and keep dry and covered prior to installation. Installing siding wet or saturated may result in shrinkage at butt joints. Carry panels on edge. Protect edges and corners from breakage. James Hardie is not responsible for damage caused by improper storage and handling of the product.

### CUTTING INSTRUCTIONS

OUTDOORS
1. Position cutting station so that wind will blow dust away from user and others in working area.
2. Use one of the following methods:
   - a. Best: i. Shears (manual, electric or pneumatic)
   - b. Better: i. Dust reducing circular saw equipped with a HardieBlade® saw blade and HEPA vacuum extraction
   - c. Good: i. Dust reducing circular saw with a HardieBlade saw blade (only use for low to moderate cutting)

INDOORS
1. Cut only using shears (manual, electric or pneumatic).
2. Position cutting station in well-ventilated area

- NEVER use a power saw indoors
- NEVER use a circular saw blade that does not carry the HardieBlade saw blade trademark
- NEVER dry sweep – Use wet suppression or HEPA Vacuum

Important Note: For maximum protection (lowest respirable dust production), James Hardie recommends always using "Best"-level cutting methods where feasible.

NIOSH-approved respirators can be used in conjunction with above cutting practices to further reduce dust exposures. Additional exposure information is available at www.jameshardie.com to help you determine the most appropriate cutting method for your job requirements. If concern still exists about exposure levels or you do not comply with the above practices, you should always consult a qualified industrial hygienist or contact James Hardie for further information. SD083105

## GENERAL REQUIREMENTS

- Install over braced wood or steel studs spaced a maximum of 24" o.c. Irregularities in framing and sheathing can mirror through the finished application.
- A water-resistive barrier is required in accordance with local building code requirements. The water-resistive barrier must be appropriately installed with penetration and junction flashing in accordance with local building code requirements. James Hardie will assume no responsibility for water infiltration.
- When installing James Hardie® products all clearance details in figs. 3,5,6,7,8,9,10&11 must be followed.
- Do not install James Hardie® products, such that they may remain in contact with standing water.
- HardiePanel® vertical siding may be installed on vertical wall applications only.
- DO NOT use stain on James Hardie® products.

## INSTALLATION:

**Fastener Requirements**

Position fasteners 3/8" from panel edges and no closer than 2" away from corners. Do not nail into corners.

**HardiePanel® Vertical Siding Installation**

- Framing must be provided at horizontal and vertical edges for nailing.
- HardiePanel vertical siding must be joined on stud.
- Double stud may be required to maintain minimum edge nailing distances.

**Joint Treatment**

- Vertical Joints - Install panels in moderate contact (fig. 1), alternatively joints may also be covered with battens, PVC or metal jointers or caulked (Not applicable to ColorPlus® Finish). (fig. 2)
- Horizontal Joints - Provide Z-flashing at all horizontal joints. (fig. 3)

## CLEARANCES

- Install siding and trim products in compliance with local building code requirements for clearance between the bottom edge of the siding and the adjacent finished grade. (fig. 5)
- Maintain a 2" clearance between James Hardie® products and paths, steps and driveways. (fig. 6)
- Maintain a 2" clearance between James Hardie products and decking material. (fig. 7)
- At the juncture of the roof and vertical surfaces, flashing and counterflashing shall be installed per the roofing manufacturer's instructions. Provide a 2" clearance between the roofing and the bottom edge of the siding and trim. (fig. 8)
- Maintain a 1/4" clearance between the bottom of James Hardie products and horizontal flashing. Do not caulk gap. (fig. 9)
- Maintain a minimum 1" gap between gutter end caps and siding & trim. (fig. 10)
- Kickout Flashing – To prevent water from dumping behind the siding and the end of the roof intersection, install a "kickout" of sufficient length and angle to direct the water running down the roof away from the siding. (fig 11)

## GENERAL FASTENER REQUIREMENTS

Fasteners must be corrosion resistant, galvanized, or stainless steel. James Hardie is not responsible for the corrosion resistance of fasteners.

- Consult applicable code compliance report for correct fasteners type and placement to achieve specified design wind loads.
- NOTE: Published wind loads may not be applicable to all areas where Local Building Codes have specific jurisdiction. Consult James Hardie Technical Services if you are unsure of applicable compliance documentation.
- Drive fasteners perpendicular to siding and framing.
- Fastener heads should fit snug against siding (no air space). (fig. A)
- Do not over-drive nail heads or drive nails at an angle.
- If nail is countersunk, caulk nail hole and add a nail. (fig. B)
- For wood framing, under driven nails should be hit flush to the plank with a hammer (For steel framing, remove and replace nail).
- Do not use aluminum fasteners, staples, or clipped head nails.

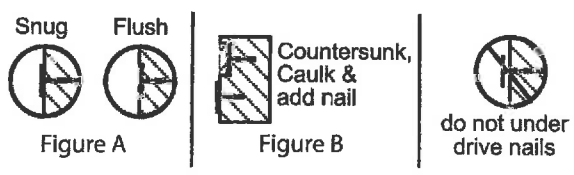


## CAULKING

For best results use an Elastomeric Joint Sealant complying with ASTM C920 Grade NS, Class 25 or higher or a Latex Joint Sealant complying with ASTM C834. Caulking/Sealant must be applied in accordance with the caulking/sealant manufacturer's written instructions or ASTM C1193.

## PAINTING

DO NOT use stain on James Hardie® products. James Hardie products must be painted within 180 days for primed product and 90 days for unprimed. 100% acrylic topcoats are recommended. Do not paint when wet. For application rates refer to paint manufacturers specifications. Back-rolling is recommended if the siding is sprayed.

**Figure 1**

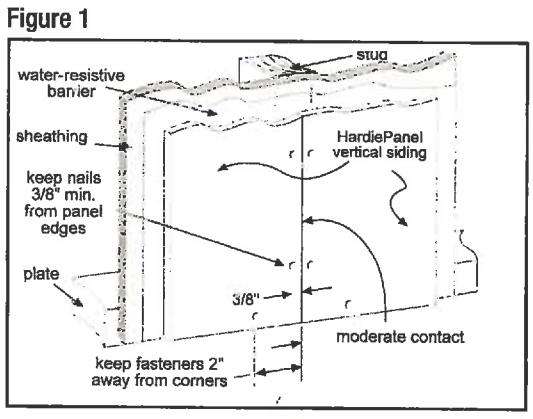


**Figure 2**
(joint treatments)

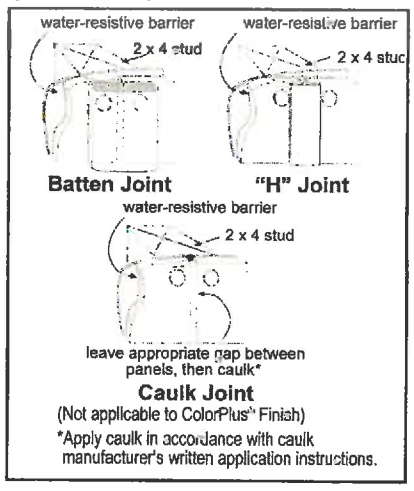


**Figure 3**
(horizontal treatments)

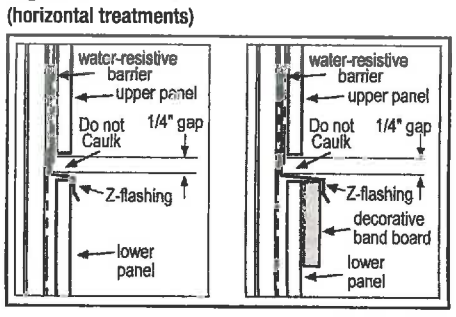


**Figure 4**

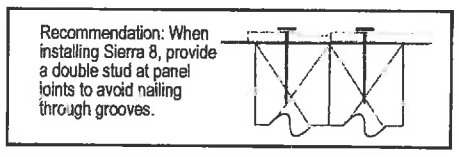


**Figure 5**
(finish grade clearance)

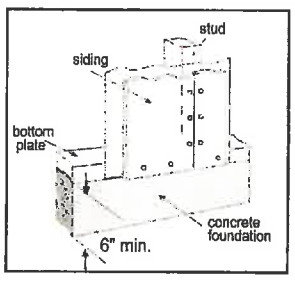


**Figure 6**
(paths,steps)

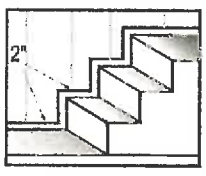


**Figure 7**
(deck clearance)

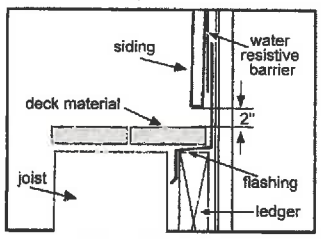


**Figure 8**
(roof clearance)

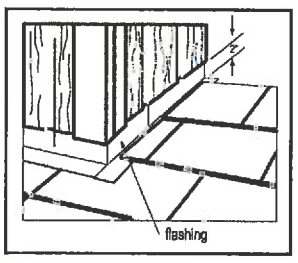


**Figure 9**
(horizontal flashing)

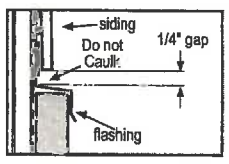


**Figure 10**
(siding gutter clearance)

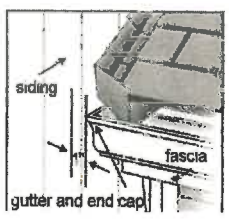


**Figure 11**
(kickout flashing†)

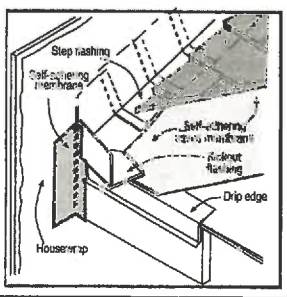


*† The illustration (figure 11) was reprinted with permission of THE JOURNAL OF LIGHT CONSTRUCTION. For subscription information, visit www.jlconline.com.*

RECOGNITION: In accordance with ICC-ES Legacy Report NER-405, HardiePanel® vertical siding is recognized as a suitable alternate to that specified in: the BOCA National Building Code/1999, the 1997 Standard Building Code, the 1997 Uniform Building Code, the 1998 International One- and Two-Family Dwelling Code, the 2003 International Building Code, and the 2003 International Residential Code for One-and Two-Family Dwellings. HardiePanel vertical siding is also recognized for application in the following: City of Los Angeles Research Report No. 24862, State of Florida listing FL#889, Dade County, Florida NOA No. 02-0729.02 ' I.S. Dept. of HUD Materials Release 1263c, Texas Department of Insurance Product Evaluation EC-23, City of New York MEA 223-93-M, and California DSA PA-019. These documents should also be consulted for additional information concerning the suitability of this product for specific applications.

WARNING: AVOID BREATHING SILICA DUST
James Hardie® products contain respirable crystalline silica, which is known to the State of California to cause cancer and is considered by IARC and NIOSH to be a cause of cancer from some occupational sources. Breathing excessive amounts of respirable silica dust can also cause a disabling and potentially fatal lung disease called silicosis, and has been linked with other diseases. Some studies suggest smoking may increase these risks. During installation or handling: (1) work in outdoor areas with ample ventilation; (2) use fiber cement shears for cutting or, where not feasible, use a HardieBlade™ saw blade and dust-reducing circular saw attached to a HEPA vacuum; (3) warn others in the immediate area; (4) wear a properly-fitted, NIOSH-approved dust mask or respirator (e.g. N-95) in accordance with applicable government regulations and manufacturer instructions to further limit respirable silica exposures. During clean-up, use HEPA vacuums or wet cleanup methods - never dry sweep. For further information, refer to our installation instructions and Material Safety Data Sheet available at www.jameshardie.com or by calling 1-800-9HARDIE (1-800-942-7343). FAILURE TO ADHERE TO OUR WARNINGS, MSDS, AND INSTALLATION INSTRUCTIONS MAY LEAD TO SERIOUS PERSONAL INJURY OR DEATH. SD050905

**JamesHardie**

© 2009 James Hardie Technology Limited. All rights reserved. TM, SM, and ® denote trademarks or registered trademarks of James Hardie Technology Limited. is a registered trademark of James Hardie Technology Limited.
NA0907

# HardiePanel® HL5™

## Paneles de revestimiento exterior verticales

JamesHardie

VÁLIDO A PARTIR DE AGOSTO DE 2009

**REQUISITOS DE INSTALACIÓN ABREVIADOS – para obtener las instrucciones completas visite www.jameshardie.com**

IMPORTANTE: NO INSTALAR O DAR ACABADO A ESTE PRODUCTO DE ACUERDO CON LOS CÓDIGOS DE CONSTRUCCIÓN CORRESPONDIENTES Y CON LAS INSTRUCCIONES ESCRITAS DE JAMES HARDIE PARA LA APLICACIÓN PUEDE CAUSAR LESIONES PERSONALES, AFECTAR EL RENDIMIENTO DEL SISTEMA, VIOLAR LOS CÓDIGOS DE CONSTRUCCIÓN LOCALES Y ANULAR LA ÚNICA GARANTÍA LIMITADA DEL PRODUCTO. ANTES DE LA INSTALACIÓN, CONFIRME QUE ESTÁ USANDO LAS INSTRUCCIONES CORRECTAS DE HARDIEZONE. PARA DETERMINAR QUÉ HARDIEZONE SE APLICA A SU UBICACIÓN, VISITE WWW.HARDIEZONE.COM O LLAME AL 1-866-942-7343 (866 9HARDIE)

### ALMACENAJE Y MANIPULACIÓN:

Almacene en un lugar plano, seco y cubierto antes de su instalación. Instalar los paneles de revestimiento exterior húmedos o saturados podría provocar que se encojan las juntas de cinpalme. Transporte los paneles por el borde. Proteja los bordes y esquinas de rupturas. James Hardie no se hace responsable por daños provocados por el almacenaje y la manipulación incorrectos del producto.

### INSTRUCCIONES DE CORTE

EXTERIORES

1. Ubique la estación de corte de manera que el viento aleje el polvo del usuario y otras personas presentes en el área de trabajo.
2. Use uno de los siguientes métodos:
   - a. Mejor: i. Cizallas (manuales, eléctricas o neumáticas)
   - b. Muy bueno: i. Sierra circular con mecanismo de reducción de polvo, equipada con una hoja de sierra HardieBlade® y extracción por aspiración HEPA
   - c. Bueno: i. Sierra circular con mecanismo de reducción de polvo, equipada con una hoja de sierra HardieBlade (use sólo para cortes pequeños a moderados)

INTERIORES

1. Corte sólo usando cizallas (manuales, eléctricas o neumáticas).
2. Coloque la estación de corte en un área bien ventilada

- NUNCA use una sierra eléctrica en interiores
- NUNCA use una cuchilla para sierra circular que no contenga la marca registrada de HardieBlade para cuchillas de sierra
- NUNCA barra en seco: use una aspiradora con eliminación de humedad o HEPA

Nota importante: para una máxima protección (la menor producción de polvo respirable), James Hardie recomienda usar siempre el nivel "mejor" de los métodos de corte cuando sea posible.

Los respiradores aprobados por NIOSH se pueden usar en conjunto con las prácticas de corte anteriores para reducir aún más la exposición al polvo. Puede encontrar información adicional sobre la exposición disponible en www.jameshardie.com para ayudarlo a determinar el método de corte más adecuado a las necesidades de su trabajo. Si todavía tiene inquietudes sobre los niveles de exposición o si no cumple con las prácticas anteriores, siempre debe consultar a un higienista industrial calificado o ponerse en contacto con James Hardie para obtener más información. SD083105

### REQUISITOS GENERALES

- Instale sobre montantes de madera reforzada o de acero a una distancia máxima de 61 cm de centro a centro. Las irregularidades en la estructura y la cubierta se pueden reflejar en la aplicación acabada.
- Según los requerimientos del código de edificación local, es obligatoria una barrera resistente al agua. La barrera resistente al agua debe instalarse correctamente junto con tapajuntas de unión y perforación, siguiendo los requisitos del código de edificación local. James Hardie no asumirá ninguna responsabilidad por la filtración de agua.
- Al instalar los productos James Hardie® se deben seguir todos los detalles de separación en las figuras 3, 5, 6, 7, 8, 9,10 y 11.
- No instale los productos James Hardie® de manera que puedan permanecer en contacto con agua estancada.
- Los paneles de revestimiento exterior verticales HardiePanel® pueden instalarse en aplicaciones de paredes verticales únicamente.
- NO use tintes en los productos James Hardie®.

### INSTALACIÓN:

**Requisitos de los sujetadores**

Ubique los sujetadores a 0,95 cm de distancia de los bordes del panel y a no menos de 5 cm de las esquinas. No clave en las esquinas.

**Instalación de los paneles de revestimiento exterior verticales HardiePanel®**

- La estructura se debe colocar en los bordes horizontales y verticales para ser clavada.
- Los paneles de revestimiento exterior verticales HardiePanel deben estar unidos al montante.
- Es posible que se requiera doble montante para mantener las distancias de clavado mínimas en el borde.

**Tratamiento de las uniones**

- Uniones verticales: instale paneles en contacto moderado (Fig. 1), como opción, las uniones también pueden estar cubiertas con tablillas, PVC o marcadores de junta de metal o con masilla de calafateo (No aplicable para el acabado ColorPlus®). (Fig. 2)
- Uniones horizontales: coloque tapajuntas en Z en todas las uniones horizontales. (Fig. 3)

### DISTANCIAS

- Instale los productos de revestimiento y rebordes en cumplimiento con los requisitos del código de edificación local para la distancia entre el borde inferior del revestimiento y el nivel de terminación adyacente. (Fig. 5)
- Mantenga un espacio de 5 cm entre los productos James Hardie® y los caminos, escalones y entradas de garaje. (Fig. 6)
- Mantenga una distancia de 5 cm entre los productos James Hardie y el material para terrazas. (Fig. 7)
- En la junta del techo y las superficies verticales, se deben instalar tapajuntas y tapajuntas escalonados según las instrucciones del fabricante de techos. Deje un espacio de 5 cm entre el techo y el borde inferior del revestimiento y reborde. (Fig. 8)
- Mantenga un espacio de 0,63 cm entre la parte inferior de los productos James Hardie y el tapajuntas horizontal. No calafatee la separación. (Fig. 9)
- Mantenga una distancia mínima de 2,5 cm entre las tapas para extremos de la canaleta y el revestimiento y reborde. (Fig. 10)
- Tapajuntas "Kickout": para evitar que el agua se vuelque detrás del revestimiento y el extremo de la intersección del techo, instale un tapajuntas "kickout" de largo suficiente y colóquelo en un ángulo de manera que el agua que corre por el techo sea dirigida fuera del revestimiento. (Fig. 11)

### REQUISITOS GENERALES DE LOS SUJETADORES

Los sujetadores deben ser resistentes a la corrosión, galvanizados o de acero inoxidable. James Hardie no se hace responsable por la resistencia a la corrosión de los sujetadores.

- Consulte los tipos correctos de sujetador y de colocación en los informes del código de cumplimiento aplicable para lograr los diseños para cargas de viento especificados.
- NOTA: es posible que las cargas de viento publicadas no sean aplicables a todas las áreas en las que los Códigos de construcción local tienen una jurisdicción específica. Consulte al Servicio Técnico de James Hardie si no está seguro sobre los documentos de cumplimiento aplicables.
- Inserte los sujetadores de manera perpendicular a los paneles de revestimiento exterior y las estructuras.
- Los cabezales de los sujetadores deben quedar bien ajustados contra los paneles de revestimiento exterior (sin espacios de aire). (Fig. A)
- No clave demasiado las cabezas de los clavos ni clave los clavos en ángulo.
- Si un clavo está avellanado, coloque masilla de calafateo en el orificio y añada un clavo. (Fig. B)
- Para la estructura de madera, los clavos clavados por debajo de la superficie se deben golpear con un martillo hasta que quedan al ras con la plancha. (Para la estructura de acero, quite y reemplace el clavo).
- No use sujetadores de aluminio, grapas ni clavos de cabeza recortada.

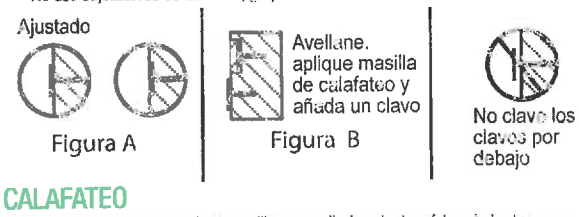


### CALAFATEO

Para obtener mejores resultados utilice un sellador elastomérico de juntas que cumpla con la norma ASTM C920 grado NS, clase 25 o superior o un sellador de uniones de látex que cumpla con la norma ASTM C834. El calafateo/sellado se debe realizar de acuerdo con las instrucciones escritas del fabricante de la masilla de calafateo/sellador o con la norma ASTM C1193.

### PINTURA

NO use tintes en los productos James Hardie®. Los productos James Hardie se pueden pintar dentro de 180 días para los productos con pintura base y 90 días para los sin pintura base. Se recomienda el uso de recubrimientos 100% acrílico. No pinte si está mojado. Para conocer las tarifas de aplicación consulte las especificaciones de los fabricantes. Se recomienda la rotación inversa si los paneles de revestimiento son rociados.

Figura 1

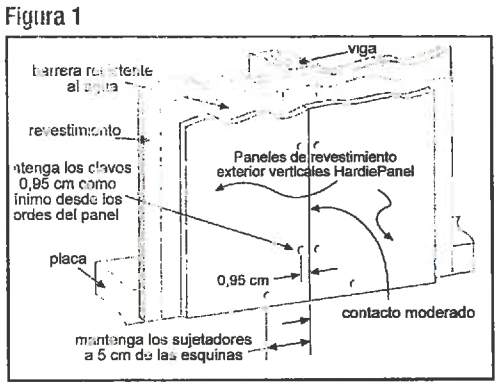


Figura 2
(tratamiento de las uniones)

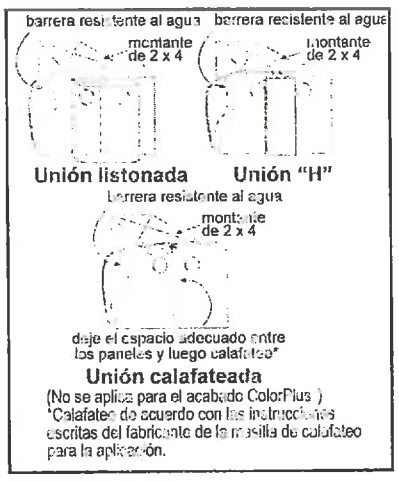


Figura 3
(tratamientos horizontales)

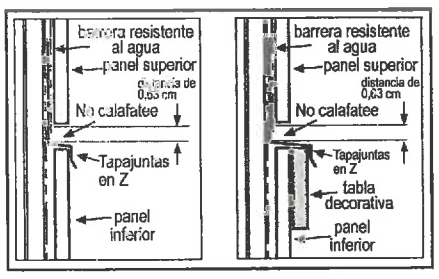


Figura 4

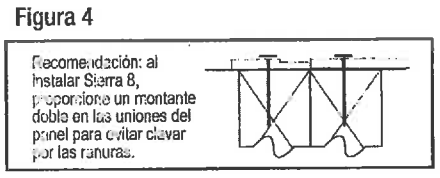


Figura 5
(espacio del nivel de terminación)

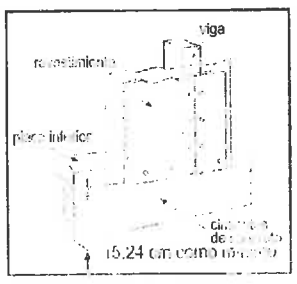


Figura 6
(caminos, escalones)

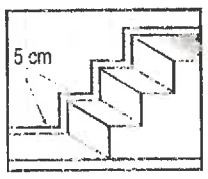


Figura 7
(distancia de la terraza)

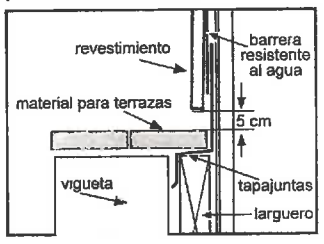


Figura 8
(distancia del techo)

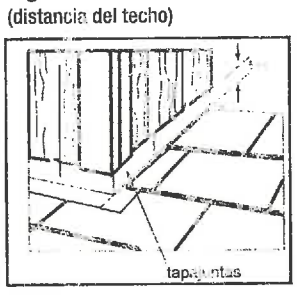


Figura 9
(tapajuntas horizontal)

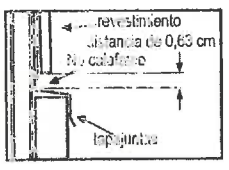


Figura 10
(distancia de la canaleta del revestimiento)

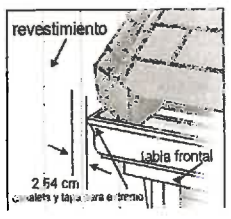


Figura 11
(tapajuntas "Kickout"†)

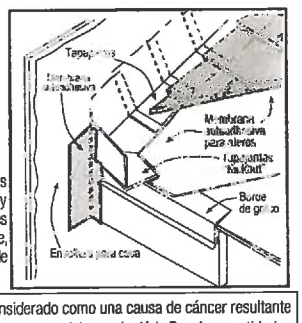


*† La ilustración (Figura 11) fue reimpresa con el permiso de THE JOURNAL OF LIGHT CONSTRUCTION. Visite www.jlconline.com para obtener información sobre la suscripción.*

RECONOCIMIENTO: de acuerdo con el Informe ICC-ES Legacy Report NER-405, los paneles de revestimiento exterior verticales HardiePanel® están reconocidos como una alternativa adecuada para los materiales especificados en: El Código de Edificación Nacional BOCA/1999, el Código Estándar de Edificación de 1997, el Código Uniforme de Edificación de 1997, el Código Internacional de Viviendas Unifamiliares y Bifamiliares de 1998, el Código Internacional de Edificación de 2003, y el Código Internacional de Residencias para Viviendas Unifamiliares y Bifamiliares de 2003. Los paneles de revestimiento exterior verticales HardiePanel también están reconocidos para la aplicación en los siguientes documentos: Informe de Investigación de la Ciudad de Los Angeles No. 24862, Listado del Estado de Florida FL#599, Condado Dade, Florida NOA No. 02-0729.02, Publicación de Materiales 1263c del Depto. de Vivienda y Desarrollo Urbano de EE. UU. (HUD), Evaluación de Productos del Departamento de Seguros de Texas EC-23, Ciudad de Nueva York MEA 223-93-M y California DSA PA-019. También se deben consultar estos documentos para obtener información adicional sobre la idoneidad de este producto para aplicaciones específicas.

ADVERTENCIA: EVITE RESPIRAR EL POLVO DE SÍLICE Los productos James Hardie® contienen sílice cristalina respirable, reconocida por el estado de California como causante de cáncer y considerado como una causa de cáncer resultante de algunas fuentes ocupacionales por la Agencia Internacional para la Investigación del Cáncer (IARC, por sus siglas en inglés) y el Instituto Nacional de Salud y Seguridad Ocupacional (NIOSH, por sus siglas en inglés). Respirar cantidades excesivas de polvo de sílice respirable también puede causar una enfermedad pulmonar discapacitante y potencialmente fatal llamada silicosis, además de habérsele relacionado con otras enfermedades. Algunos estudios sugieren que fumar puede aumentar estos riesgos. Durante la instalación o manipulación: (1) trabaje en áreas en exteriores con abundante ventilación; (2) use cizallas de fibrocemento para cortar o, de no ser posible, use una cuchilla HardieBlade® y una sierra circular con mecanismo reductor de polvo conectada a una aspiradora HEPA; (3) advierta a otras personas que estén en los alrededores; (4) use una máscara para polvo o un respirador adecuado y aprobado por el NIOSH (por ejemplo, N-95), de acuerdo con las regulaciones gubernamentales pertinentes y las instrucciones del fabricante para limitar aún más la exposición a la sílice respirable. Durante la limpieza, use aspiradoras HEPA o métodos de limpieza en húmedo, nunca barra en seco. Para obtener más información, consulte nuestras Instrucciones de instalación y la Hoja de datos de seguridad de materiales (MSDS, por sus siglas en inglés), disponibles en www.jameshardie.com o llamando al 1-800-9HARDIE (1-800-942-7343). NO SEGUIR NUESTRAS ADVERTENCIAS, MSDS E INSTRUCCIONES DE INSTALACIÓN PUEDE PROVOCAR DAÑOS PERSONALES GRAVES O LA MUERTE. SD050905

JamesHardie

© 2009 James Hardie Technology Limited. Todos los derechos reservados. TM, SM y ® denominan marcas comerciales o marcas comerciales registradas de James Hardie Technology Limited. es una marca registrada de James Hardie Technology Limited. NA0907

**ARF-1011** **Regular Agenda Item 4- C**

**Regular BOS Meeting**

**Meeting Date:** 01/10/2012

| | | | |
|---|---|---|---|
| Submitted For: | Steve Sanders, Public Works Division Deputy Director | Submitted By: | Steve Sanders, Public Works Division Deputy Director, Public Works Division |
| Department: | Public Works Division | Division: | Engineering |
| Fiscal Year: | 2011-2012 | Budgeted?: | No |
| Contract Dates Begin & End: | N/A | Grant?: | No |
| Matching Requirement?: | No | Fund?: | New |
| Presenter's Name: | Steve Sanders | | |

---

## Information

### Request/Subject

Public Sale for an unnamed alley lying between Hill and Marian Street and between a portion of blocks 23 and 24 as shown on Miami Map No. 2, Official Map No. 22, Gila County Records.

### Background Information

On September 20, 2011 during a regular meeting of the Board of Supervisors the Board gave the approval to begin the process to dispose of an unnecessary unnamed alley lying between Hill and Marian Street and between a portion of blocks 23 and 24 as shown on Miami Map No. 2, Official Map No. 22, Gila County Records. Staff began the necessary notifications and public postings of the Board's decision.

The parcels of land that abut the alley are owned by the Nichols Trust. A trustee for the Nichols Trust has submitted a bid for the alley adjacent to their property.

Nichols Trust submitted a bid in the amount of $902.00 for the alley. This bid meets the minimum requirements established by the current Gila County Policy on the abandonments of roadways in Gila County.

### Evaluation

The alley was created when Miami Map No. 2 was recorded on October 9, 1909. The alley in question is not needed for maintenance purposes by Gila County, and is important to an adjacent land owner. Abandoning this portion of the alley does not negatively affect Gila County or our ability to maintain this area. It does assist an adjacent land owner in the service to their customers.

The County will benefit from the sale of the road by having the property go on the County's tax rolls.

### Conclusion

It would be in the best interest of all parties involved to allow the alley lying between Hill and Marian Street and between a portion of blocks 23 and 24 as shown on Miami Map No. 2, Official Map No. 22, Gila County Records to become the property of the adjacent landowner.

### Recommendation

The Public Works Division Deputy Director recommends that Gila County accept a bid from the Nichols Trust in the amount of $902.00 for an unnamed alley lying between Hill and Marian Street and between a portion of blocks 23 and 24 as shown on Miami Map No. 2, Official Map No. 22, Gila County Records.

Suggested Motion

Public Sale – Information/Discussion/Action for the public sale an unnamed alley lying between Hill and Marian Street and between a portion of blocks 23 and 24 as shown on Miami Map No. 2, Official Map No. 22, Gila County Records, and accept a bid in the amount of $902.00 from the Nichols Trust.
**(Steve Sanders)**

---

Attachments

Notice of Public Sale

Bid Received

# NOTICE OF SALE OF PUBLIC ROADWAY
# PURSUANT TO A.R.S. §28-7204

**NOTICE IS HEREBY GIVEN** that STEVE SANDERS, Deputy Director of Gila County Public Works, in the County of Gila, State of Arizona, will sell at Public Sale on the 10th day January, 2012 at 10:00 o'clock the alleyway as described in the attached EXHIBIT "A".

**TAKE FURTHER NOTICE** that any person may submit purchase offers, however abutting owners of the aforementioned alleyway or portion of the alleyway have preference rights to purchase the portion or a part of the portion for the consideration paid for the land by the city, town, county or state, whichever first acquired the land within the alleyway for public use.

**TAKE FURTHER NOTICE** that the abutting owner can exercise preference rights before the proposed date of sale by written notice to MARIAN SHEPPARD, Chief Deputy Clerk of the Gila County Board of Supervisors, 1400 E. Ash Street, Globe, Arizona 85501. Notice that any purchase offers must be received prior to December 30, 2011.

DATED this 8th day of November, 2011.

By: Marian Sheppard
MARIAN SHEPPARD, Chief Deputy Clerk

EXHIBIT "A"

An unnamed alleyway lying between Hill Street and Marian Street and between a portion of Blocks 23 and 24 as shown on Miami Map No. 2, Official Map No. 22, Gila County Records

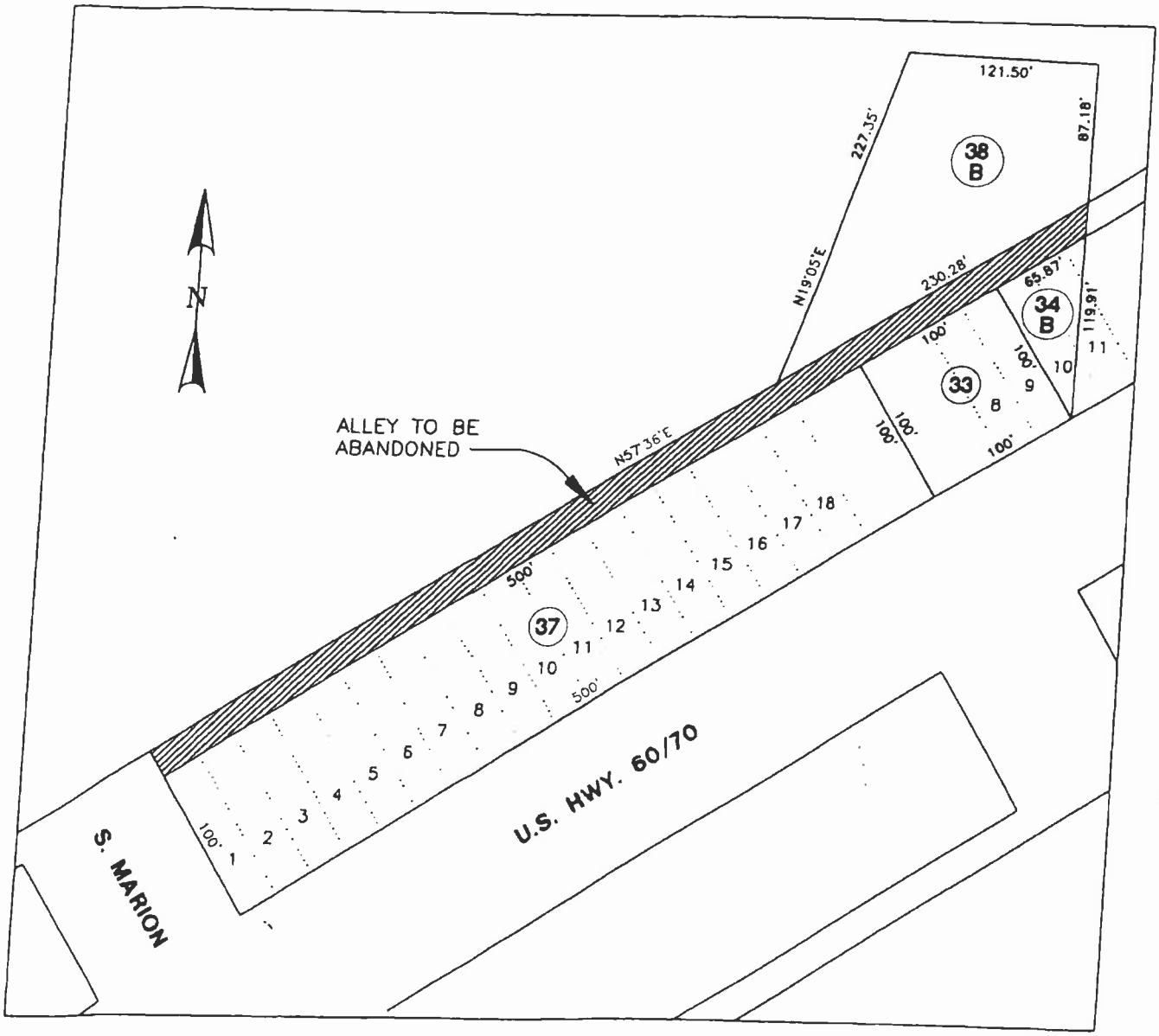

**Monty Nichols**
**Clara Nichols**
6517 S. KINGS RANCH RD. BOX 196
GOLD CANYON, ARIZONA 85218
(480) 983-0805

Wells Fargo Bank, N.A.
Boulder City, NV 89005

94-7074-3212

11/21/2011

PAY TO THE ORDER OF Gila County $ **902.00

Nine Hundred Two and 00/100********** DOLLARS

Security features. Details on back.

Gila County
P.O. Box 1093
Globe, Az 85502

MEMO

Clara Nichols
AUTHORIZED SIGNATURE

[redacted]

Nichols Trust
11089 E. Hummingbird Lane
Gold Canyon, AZ 85118

**NOTICE OF SALE OF PUBLIC ROADWAY**
**PURSUANT TO A.R.S. §28-7204**

***NOTICE IS HEREBY GIVEN*** that STEVE SANDERS, Deputy Director of Gila County Public Works, in the County of Gila, State of Arizona, will sell at Public Sale on the 10th day of January, 2012 at 10:00 o'clock the alleyway described as follows:

**A unnamed alleyway lying between Hill Street and Marian Street**
**and between a portion of Blocks 23 and 24,**
**as shown on Miami Map No. 2, Official Map No. 22, Gila County Records**

***Section IV, Paragraph B of the current guidelines for roadway abandonments in Gila County states:*** *"Should the County choose to sell or vacate the roadway the County shall receive consideration commensurate with value of the abandoned roadway. Consideration based upon current assessed value of the land in the area shall be deemed commensurate with the vale of the road. The County may also accept the certified appraisal of an Appraiser licensed in the State of Arizona as proof of consideration deemed commensurate with the value of the roadway. Any and all costs associated with the appraisal shall be at the expense of the applicant."*

***THEREFORE TAKE NOTICE*** that any person may submit purchase offers, however, abutting owners of the alleyway or portion of the alleyway have preference rights to purchase the portion or part of the portion for the consideration paid for the land by the city, town, county or state, whichever first acquired the land within the roadway for public use. Based on the guidelines of Section IV you as abutting owner of the alleyway the minimum bid the County will consider is $902.00.

***TAKE FURTHER NOTICE*** that the abutting owner can exercise preference rights before the proposed date of sale by written notice to Marian Sheppard, Chief Deputy Clerk of the Gila County Board of Supervisors, 1400 E. Ash Street, Globe, Arizona 85501. Notice of Purchase must be received prior to. **December 30, 2011**

**ARF-1009** **Regular Agenda Item 4- D**

**Regular BOS Meeting**

**Meeting Date:** 01/10/2012

| | | | |
|---|---|---|---|
| Submitted For: | Steve Sanders, Public Works Division Deputy Director | Submitted By: | Steve Sanders, Public Works Division Deputy Director, Public Works Division |
| Department: | Public Works Division | Division: | Engineering |
| Presenter's Name: | Steve Sanders | | |

## Information

### Request/Subject

Adopt Resolution No. 12-01-01 deeding a portion of Hill Street and unnamed alleys in Inspiration Townsite, Plat Map No. 39, Gila County Records to Brant and Maurisa Palmer

### Background Information

Gila County Board of Supervisors Resolution No. 97-10-1 recorded in Fee No. 1997-714763 vacated a portion of Hill Street and two alleyways in Inspiration Townsite, Plat Map No. 39, Gila County Records. The quit claim deed and legal description transferring title of the road and alleyways and recorded in Fee No. 1997-714764 was recently found to contain an error in the legal description.

### Evaluation

Verification of the legal description did contain an error. The error was the result of an extra bearing and distance inserted into the description.

### Conclusion

Preparation of a corrective quit claim deed and legal description along with an accompanying resolution for the Board to sign will correct the error and transfer the correct road and alleyways to the current owners.

### Recommendation

It is the recommendation of the Deputy Director of Public Works that the Board of Supervisors approve Resolution No. 12-01-01 authorizing the Chairman to sign the quit claim deed.

### Suggested Motion

Information/Discussion/Action to adopt Resolution No. 12-01-01 approving the disposal of an unnecessary public roadway being a portion of Hill Street and unnamed alleys in Inspiration Townsite, Plat Map No. 39, Gila County Records, and to authorize the Chairman to execute and deliver in the name and under the seal of the County of Gila, a corrective quit claim deed conveying the abandoned road and alleyways to Brant and Maurisa Palmer. **(Steve Sanders)**

## Attachments

Resolution 12-01-01

Corrective Quit Claim Deed

Resolution 97-10-1

Fee No. 714764 Incorrect Quit Claim Deed

**RESOLUTION NO. 12-01-01**

**A RESOLUTION APPROVING THE DISPOSAL OF AN UNNECESSARY PUBLIC ROADWAY AND ALLEYS BEING A PORTION OF HILL STREET AND UNNAMED ALLEYS IN INSPIRATION TOWNSITE, PLAT MAP 39, GILA COUNTY RECORDS, GILA COUNTY, ARIZONA**

**WHEREAS**, BRANT J. and MAURISA LYNN PALMER, owners of the land adjoining that parcel of land hereinbefore described; and

**WHEREAS**, it has been determined that the disposal of the unnecessary public roadway will not leave any property without access to public roads and streets of Gila County, and is no longer necessary for public use, and the same should be granted; and

**WHEREAS,** BRANT J. and MAURISA LYNN PALMER, agree that in consideration of the disposal of the said parcel of land and the conveyance of the ground so vacated to them as the adjoining owner, to release and discharge the COUNTY OF GILA from any and all damages, claims and demands of every kind and nature arising out of the conveyance of the same to him as the adjoining property owner; and

**WHEREAS,** it is to the best interest of the COUNTY OF GILA to be relieved of the obligation to maintain said parcel of land.

**NOW, THEREFORE, BE IT RESOLVED** by the Gila County Board of Supervisors:

*Section 1:* That the portion of land described herein and constituting that portion of Hill Street adjacent to Lot 1, Block 7, and Lots 24 through 30, Block 2, and portion of unnamed alleys adjacent to Lots 24 through 26, and Lot 41, Block 2, Inspiration Townsite, Plat Map 39, Gila County Records, Gila County, Arizona, is hereby vacated and abandoned, subject, however, to all existing water, gas and utility easements now existing on said parcel of land.

*Section 2:* That the Chairman of the said Board of Supervisors, be, and she is hereby authorized, empowered and directed to make, execute and deliver in the name and under the seal of the COUNTY OF GILA, a quit claim deed conveying Brant J. and Maurisa Lynn Palmer, as owners of the adjacent property, that parcel of land hereinbefore described, and to cause said Deed to be attested and the seal of the said COUNTY OF GILA to be affixed thereto by the Clerk of said Supervisors.

***The above described quit claim deeds and legal descriptions are attached for informational purposes only and will be recorded as separate documents***

**PASSED AND ADOPTED** this 10th day of January 2012, at Globe, Gila County, Arizona

Attest:

**GILA COUNTY BOARD OF SUPERVISORS**

_____

Marian Sheppard
Chief Deputy Clerk of the Board

_____

Tommie C. Martin, Chairman

Approved as to form:

_____

Bryan Chambers
Chief Deputy County Attorney

When recorded return to:
Gila County Engineering Services
1400 East Ash Street
Globe, Arizona 85501

# CORRECTIVE QUIT CLAIM DEED

KNOW ALL MEN BY THESE PRESENTS: for the consideration of Ten Dollars ($10.00), and other valuable considerations, **GILA COUNTY, a BODY POLITIC,** does hereby release, remise, and forever quitclaim unto **BRANT J. PALMER and MAURISA LYNN PALMER, husband and wife**, the Releasee, with all rights, title and interest in that certain Real Property situated in Gila County, State of Arizona, and legally described as follows:

**See Exhibit "A" attached and made part hereof**

**Exempt per A. R. S. section 11-1134 A-3**

This Quit Claim Deed is to correct the Legal Description in that certain Quit Claim Deed recorded Oct. 10, 1997 as FEE # 714764 in the official records of Gila County, Arizona.

Date this _____ day of _____, 2012

Approved:

_____
Tommie C. Martin, Chairman
Gila County Board of Supervisors

Attest:

_____
Marian Sheppard, Chief Deputy Clerk
Gila County Board of Supervisors

STATE OF (ARIZONA)
) ss.
COUNTY OF (GILA)

## ACKNOWLEDGMENT

On this _____ day of _____, 2012, before me, the undersigned Notary Public, personally appeared Tommie C. Martin, Chairman of the Gila County Board of Supervisors, and Marian Sheppard, Chief Deputy Clerk of the Board, known to me to be the individuals who executed the foregoing instrument and acknowledged the same to be their free act and deed.

WITNESS my hand and official seal.

My Commission Expires:

_____
Notary Public

**EXHIBIT "A"**
**VACATION DESCRIPTION**
**Portion of Hill Street**
**Presently known as E. Calle Pequena**
**Adjacent to Lot 1, Block 7, and**
**Lot 24 through 30, Block 2**
**And**
**Portion of Unnamed Alleys**
**Adjacent to Lot 24 through 26, and Lot 41, Block 2**
**INSPIRATION TOWNSITE, Plat Map No. 39**

**Gila County Public Works** **November 3, 2011**
**Job No. GC2011-31** 

**A parcel of land being a portion of Hill Street, and a portion of two Unnamed Alleys, as shown on Inspiration Townsite, Official Plat Map Number 39, Gila County Records, being situate in the Northwest Quarter of the Northwest Quarter (NW 1/4 NW 1/4) of Section 28, Township 1 North, Range 15 East, Gila and Salt River Meridian, Gila County, Arizona, having a boundary more particularly described as follows;**

**BEGINNING at the Southwest corner of Lot 1, Block 7 of INSPIRATION TOWNSITE , said point also being on the North line of Hill Street, presently known as E. Calle Pequena;**

**THENCE Easterly, 120 feet (record) to the Southeast corner of Lot 1, Block 7, said point also being on the North line of Hill Street, presently known as E. Calle Pequena;**

**THENCE Southerly, 60 feet (record) to the Northeast corner of Lot 30, Block 2, said point also being on the South line of Hill Street, presently known as E. Calle Pequena;**

**THENCE Westerly, 165.79 feet (record) to the Northwest corner of Lot 26, Block 2, said point also being at the intersection of the South line of Hill Street, presently known as E. Calle Pequena, and the East line of an Unnamed 30 feet wide Alley;**

**THENCE Southerly, 123.73 feet (record) to the Southwest corner of Lot 26, Block 2;**

**THENCE Westerly, 41.86 feet (record) to the Southeast corner of Lot 41, Block 2;**

**THENCE Northwesterly, 132.64 feet (record) to the Northwest corner of Lot 41, Block 2;**

**THENCE Northerly, 60 feet more or less (calculated) along the projection of the West line of Lot 41, Block 2, to the centerline of Hill Street, presently known as E. Calle Pequena;**

**THENCE Easterly along said centerline of Hill Street, presently known as E. Calle Pequena 165 feet (record) to the projected centerline of an Unnamed 30 feet wide Alley;**

**THENCE Northerly along said projected centerline of an Unnamed 30 feet wide Alley 30 feet (record) to the North line of Hill Street, presently known as E. Calle Pequena;**

**THENCE Easterly 15 feet (record) to the Southwest corner of Lot 1, Block 7, and the POINT OF BEGINNING, EXCEPT Lot 25, Block 2, having an area of 0.48 acres, more or less.**

**SUBJECT TO:** Arizona Revised Statute § 28-7210 all Rights of way or easements of existing sewer, gas, water, or similar pipelines and appurtenances and for canals, laterals or ditches and appurtenances, and for electric, telephone, and similar lines and appurtenances shall continue as they existed prior to the disposal or vacation thereof.

FEE # 714763 C No Fee
# PAGES 2
RECORDED AT THE REQUEST OF:
Gila County Board of Supervisors
DATE Oct 10 '97 TIME 3:45
OFFICIAL RECORDS OF GILA COUNTY, AZ
LINDA HAUGHT ORTEGA, RECORDER
BY: [illegible]

**RESOLUTION OF THE**
**GILA COUNTY BOARD OF SUPERVISORS**

No. 97-10-1

*A RESOLUTION OF THE GILA COUNTY BOARD OF SUPERVISORS FOR THE VACATION OF A PORTION OF HILL STREET AND TWO ALLEYWAYS IN INSPIRATION TOWNSITE, G.C.R. MAP NO. 39 PURSUANT TO A.R.S. Section 28-1902.*

It is hereby resolved by the Gila County Board of Supervisors, acting pursuant to A.R.S. Section 28-1902, that:

**WHEREAS**, A.R.S. §28-1902 authorizes the Gila County Board of Supervisors to vacate by resolution roadways that are no longer necessary for public use as a roadway; and,

**WHEREAS**, it is in the best interest of Gila County to vacate a portion of Hill Street and said alleyways; and,

**WHEREAS**, the adjoining landowner will a receive deed to the vacation of a portion of Hill Street and said alleyways; and,

**WHEREAS**, there is an easement reserved pursuant to A.R.S.§28-1903 and §28-1908;

**NOW, THEREFORE, BE IT RESOLVED** by the Gila County Board of Supervisors that a portion of Hill Street and said alleyways be vacated according to the legal description attached hereto;

**BE IT FURTHER RESOLVED**, that the Gila County Board of Supervisors is hereby authorized to execute and deliver in the name of Gila County a deed conveying the vacation of a portion of Hill Street and said alleyways to **ALBERT and HOPE PALMER**, husband and wife, and cause said deed to be attested and the seal of Gila County to be affixed by the Clerk of the Board.

714763

**ADOPTED** this 7th day of October, 1997

GILA COUNTY BOARD OF SUPERVISORS

Cruz Salas, Chairman
Gila County Board of Supervisors

ATTEST:

Steve Besich, Clerk
Gila County Board of Supervisors

APPROVED AS TO FORM:

Jerry De Rose, Gila County Attorney

New Parcel Adj. to
306-06-021
-020

FEE # 714764 # PAGES 2
RECORDED AT THE REQUEST OF:
Gila County Board of Supervisors
DATE Oct 10 '97 TIME 3:45
OFFICIAL RECORDS OF GILA COUNTY, AZ
LINDA HAUGHT ORTEGA, RECORDER
BY

When recorded return to:
Gila County Engineering Services
1400 East Ash
Globe, AZ 85501

## QUITCLAIM DEED

KNOW ALL MEN BY THESE PRESENTS, for the consideration of $10.00 Dollars, and other valuable considerations, **Gila County, a Body Politic**, do hereby release, remise, and forever quitclaim unto **Albert L. & Hope Palmer**, all right, title and interest in the certain property situated in Gila County, State of Arizona, and described as follows:

See Exhibit "A" attached hereto and made a part hereof

Dated this 7th day of October 1997

Signature Chairman

Jerry Debose, County Attorney

Signature Clerk

STATE OF ARIZONA
County of GILA

This instrument was acknowledged before me this 7th day of October 1997 by Cruz

My commission 11-07-2000

THERESA L. ORTEGA NOTARY PUBLIC GILA COUNTY, ARIZONA

Theresa L. Ortega
Notary Public

714764

LEGAL DESCRIPTION

Abandonment of a Portion of Hill Street and Alley
Inspiration Townsite, Map 39
Gila County Records

That certain piece or parcel of land situate, lying and being in the Northwest Quarter of the Northwest Quarter of Section 28, Township 1 North, Range 15 East, Gila and Salt River Base and Meridian, Gila County, Arizona, having a boundary more particularly described as follows:

Beginning at the centerline intersection of Cottonwood and Hill Streets shown on Inspiration Townsite Map 39 and on record in the office of the Gila County recorder; thence North 89°58'00" East a distance of 539.90 feet; thence South 0°02'00" West a distance of 300.00 feet to the TRUE POINT OF BEGINNING; thence North 89°42'00" East along the northerly side line of Hill Street a distance of 135.00 feet to the southeasterly corner of Lot 1, Block 7 of said Inspiration Townsite; thence South 0°01'00" East a distance of 60.00 feet to the northeasterly corner of Lot 30, Block 2 of said Inspiration Townsite; thence South 89°42'00" West along the southerly side line of Hill Street a distance of 165.79 feet; thence South 0°02'00 West a distance of 123.73 feet; thence South 89°38'00" West a distance of 41.85 feet; thence North 44°38'00" West a distance of 131.47 feet; thence North 0°02'00" East a distance of 59.74 feet; thence North 89°42'00" East a distance of 165.00 feet; thence North 0°02'00" East a distance of 30.00 feet to the true point of beginning; said parcel having an area of .58 acres more or less.

EXCEPT that parcel described in the instrument recorded in Docket 741, page 201, Gila County records.

REGISTERED LAND SURVEYOR
CERTIFICATE NO.
16191
JOHNNY
SABAN
ARIZONA, U.S.A.

**ARF-1007** **Regular Agenda Item 4- E**

**Regular BOS Meeting**

**Meeting Date:** 01/10/2012

| | | | |
|---|---|---|---|
| Submitted For: | Steve Stratton, Public Works Division Director | Submitted By: | Valrie Bejarano, Contracts Support Specialist, Finance Department |
| Department: | Public Works Division | Division: | Administration |
| Fiscal Year: | FY 2011-2012 | Budgeted?: | Yes |
| Contract Dates Begin & End: | 3-20-12 to 9-20-12 | Grant?: | No |
| Matching Requirement?: | No | Fund?: | New |
| Presenter's Name: | Steve Stratton | | |

## Information

### Request/Subject

Request to Advertise Call for Bids No. 111311-1 for the Pine Creek Canyon Road Reconstruction Project

### Background Information

In 2001 Gila County obtained aerial mapping services of Pine Creek Canyon Road for the purpose of providing more information for engineering services. In 2004 Gila County began right-of-way (ROW) identification and drainage improvement of the existing Pine Creek Canyon Road. It was determined that significant Public ROW would need to be acquired to bring the road up to County Standards. Two versions of Conceptual Design Plans for 2 different roadway cross sections were completed. As the citizens were approached by the County to dedicate ROW it was determined that the County Standards could not be obtained. The project was delayed due to some of the property owners' resistance to signing property over to the County. In 2010 the Engineer designed the roadway with no additional right-of-way. The limits of this project will commence at the intersection of SR 87 and Pine Creek Canyon Road and end just north of Trails End Drive. The length of this project is approximately 4,800 feet.

### Evaluation

At completion the Pine Creek Canyon Road will consist of no less than a 22-foot wide paved surface with improved shoulders where possible. The posted speed limit with be 25 miles per hour. The hydrologic analysis included estimates of the 25- and 100-year rainfall events. Only existing hydraulic structures (culverts) will be improved under this project.

### Conclusion

With all of the engineering now complete, we need to begin reconstruction of Pine Creek Canyon Road. Our estimated time for construction is March 2012, and the project will be completed by September 20, 2012.

### Recommendation

The Public Works Director recommends that the Board of Supervisors approve the advertisement of Call for Bids No. 111311-1 to be pubilshed in the newspaper on January 18th and 25th, 2012.

### Suggested Motion

Information/Discussion/Action to authorize the advertisement of Call for Bids No. 113111-1 for the Pine Creek Canyon Road Reconstruction Project.
**(Steve Stratton)**

---

Attachments

Request to Advertise Form for Bid 111311-1

Call for Bids No. 111311-1 Pine Creek Canyon Road Project

# GILA COUNTY DEPARTMENTAL REQUEST TO ADVERTISE FOR BIDS

SEE GC2-7-111 (ART.1) OF PROCUREMENT PROCEDURES FOR INSTRUCTIONS TO PREPARE THIS FORM

All departments procuring purchases in excess of $50,000.00 that requires advertising for bids must follow the Procurement Procedure and must complete item "I" of this form prior to such a purchase. **The requesting Department is responsible for writing the necessary specifications and routing them, including this form, accompanied by a Bid Request Form to the Procurement Department.** THIS FORM MUST BE COMPLETE, ACCURATE, AND HAVE A COPY OF THE SPECIFICATIONS ATTACHED BEFORE ROUTING BEGINS. ALL CALLS FOR BID/PROPOSALS AND SPECIFICATIONS WILL BE IN ACCORDANCE WITH THE AZ. REVISED STATUTES AND THE GILA COUNTY PURCHASING CODE AND PROCEDURES.

I. IS THIS A CALL FOR BID: X PROPOSAL: _____ DEPARTMENT NAME: Public Works Division

FUNDING SOURCE: FUND NO.: 6510 DEPT NO.: 341 PROGRAM NO.: 526 LOCATION NO.: 000 ACCOUNT NO.: 4500.70 PJCT: REC.04

**I. DESCRIPTION:** List item(s) to be purchased, Purpose, Spec. Summary, Estimated Cost and Funding Source. It is the intent of this solicitation to establish a contract with a contractor to provide for the completion of the Pine Creek Canyon Road Reconstruction Project.

Signed: _____ Date: 12-13-11 Signature indicates material specifications are approved as written.
Elected Officials or Department Head

**II. DEPARTMENTAL INFORMATION ONLY** BID NO.: 111311-1
*(For Procurement Use Only)*

Action Dates:

Department Receipt: ___/___/___ Placed on Agenda: 01 / 10 / 12

Presented to Board: ___/___/___ Approved to Call: ___/___/___

Delivered to Paper: ___/___/___ Paper Name: Payson Roundup .

Advertised Dates: From: 01 / 18 / 12 To: 01 / 25 / 12

Closing Date: 03 / 01 / 12 Bid Award Date: ___/___/___

Awarded to: _____ P.O. No.: _____

Proposed Delivery Date: ___/___/___

**III. OTHER APPROVAL** (only as necessary)

Public Works: Dept. Head Sign: _____ Date: 12 / 13 / 11

Community Action: Dept. Head Sign: _____ Date: ___/___/___

MIS Department: Dept. Head Sign: _____ Date: ___/___/___

**IV. APPROVED FUNDING**

Finance Director Signature: _____ Date: ___/___/___

**V. LEGAL AND ADMINISTRATIVE APPROVAL** (Bid packet must be completed and attached)

Signed: _____ Date: ___/___/___
Bryan B. Chambers, Chief Deputy County Attorney (Approved as to form)
*for* Daisy Flores County Attorney

Signed: _____ Date: ___/___/___
Tommie C. Martin, Chairman, Board of Supervisors (Approved as to specifications and information)

**VI. AWARD APPROVAL**

Signed: _____ Date: ___/___/___
(Declaration that the Board of Supervisors approved the award as stated in Section V. of this page)
Tommie C. Martin, Chairman of the Board of Supervisors, Gila County

# GILA COUNTY
# REQUEST FOR INVITATION FOR BIDS

# PINE CREEK CANYON ROAD
# RECONSTRUCTION PROJECT

## BID CALL 111311-1

## BIDDER'S INFORMATION
## CONTRACT DOCUMENTS AND SPECIFICATIONS

***BOARD OF SUPERVISORS***
**Tommie C. Martin, Chairman**
**Michael A. Pastor, Vice Chairman**
**Shirley L. Dawson, Member**

***COUNTY MANAGER***
**Don E. McDaniel Jr.**

***PUBLIC WORKS DIRECTOR***
**Steve Stratton**

**JANUARY 2012**

# GILA COUNTY
# REQUEST FOR INVITATION FOR BIDS

# PINE CREEK CANYON ROAD
# RECONSTRUCTION PROJECT

## PINE, ARIZONA

## BIDDER'S INFORMATION
## CONTRACT DOCUMENTS AND SPECIFICATIONS

## BID NO. 111311-1

C.L. Williams Consulting, Incorporated
621 South Hillside Lane
Pinetop, Arizona 85935
(928) 367-2248

# SECTION 0I

# INVITATION FOR BIDS

# IFB-1

**INVITATION FOR BIDS**
**BID CALL NO. 111311-1**

Sealed bids will be received by **Gila County Procurement, 1400 East Ash St., Globe, AZ 85501,** until **11:00 A.M. (AZ Time), Thursday, March 1st, 2012** for the **PINE CREEK CANYON ROAD RECONSTRUCTION PROJECT, GILA COUNTY, ARIZONA, BID NO. 111311-1** in strict accordance with the rules and regulations of the Gila County Procurement Code on file in the office of the Gila County Clerk of the Board, Globe, Arizona. **No bids will be accepted after 11:00 AM. The Bids will be publicly opened and read aloud at 11:00 AM, Arizona time, at the location above, 2nd floor, Board Conference Room #257.**

All Bids shall be made on the Invitation for Bids forms included in the Contract Documents and shall include all applicable taxes.

**There is a mandatory site walk through scheduled for 10:00 A.M. (AZ Time), Friday, January 27th, 2012.** Meeting shall be held at the Pine Community Center, Cultural Hall, Highway 87 , Pine, AZ. Only those companies signed in on the walk through sign-in sheet will be permitted to bid. Plans, Specifications and Contract documents are available and may be obtained from the office of Engineering Services, 928-402-8612, Gila County Public Works Division, 745 North Rose Mofford Way, Globe, AZ.

Each Bid submitted, either by hand, United States Postal Service, or other carrier, shall be sealed and plainly marked **"PINE CREEK CANYON ROAD RECONSTRUCTION PROJECT, GILA COUNTY, ARIZONA BID CALL NO. 111311-1".** All Bids shall be mailed or delivered to the **Gila County Procurement, 1400 East Ash St., Globe, AZ 85501**. Gila County Procurement and Board of Supervisors of Gila County will not be responsible for those bids submitted that are not marked appropriately and/or sent to the wrong address. Prevailing clock shall be the atomic clock in the Purchasing office.

Contractors are invited to be present at the opening of bids but absence will not be considered cause for disqualification.

Contractors shall be responsible for any licenses or permits required by the regulatory agency of the State of Arizona that apply to the performance of this contract.

After the Contractor who is determined to be most Advantageous to the county has been selected through the source selection process, negotiations may be conducted for the purpose of developing a recommended Contract for Award.

The Gila County Board of Supervisors reserves the right to reject any or all bids, or to accept any bids, or to waive any informality in any bid, or to withhold the award if deemed in the best interest of Gila County.

Dates advertised in Arizona Silver Belt**:** **January 18th and 25th, 2012**

Signed:_____ Date: _____/_____/_____
**Bryan B. Chambers, Chief Deputy County Attorney**
***for* Daisy Flores, County Attorney**

Signed: _____ Date: _____/_____/_____
**Tommie C. Martin, Chairman, Board of Supervisors**

**TABLE OF CONTENTS**

***GENERAL PROVISIONS***

**SECTION 01 ..... 1**
**NOTIFICATION TO BIDDERS ..... 1**

**SECTION 10 ..... 3**
**DEFINITION OF TERMS ..... 3**

**SECTION 20 ..... 9**
**PROPOSAL REQUIREMENTS AND CONDITIONS ..... 9**
20-03 CONTENTS OF PROPOSAL FORMS ..... 9
20-04 ISSUANCE OF PROPOSAL FORMS ..... 9
20-05 INTERPRETATION OF ESTIMATED PROPOSAL QUANTITIES ..... 9
20-06 EXAMINATION OF PLANS, SPECIFICATIONS, AND SITE ..... 9
20-07 PREPARATION OF PROPOSAL ..... 10
20-08 IRREGULAR PROPOSALS ..... 10
20-09 PROPOSAL GUARANTY ..... 11
20-10 DELIVERY OF PROPOSAL ..... 11
20-11 WITHDRAWAL OR REVISION OF PROPOSALS ..... 11
20-12 PUBLIC OPENING OF PROPOSALS ..... 11
20-13 DISQUALIFICATION OF BIDDERS ..... 11
20-14 PROTESTS ..... 12

**SECTION 30 ..... 13**
**AWARD AND EXECUTION OF CONTRACT ..... 13**
30-01 CONSIDERATION OF PROPOSALS ..... 13
30-02 AWARD OF CONTRACT ..... 13
30-03 CANCELLATION OF AWARD ..... 13
30-04 RETURN OF PROPOSAL GUARANTY ..... 13
30-05 REQUIREMENTS OF CONTRACT BONDS ..... 14
30-06 EXECUTION OF CONTRACT ..... 14
30-07 APPROVAL OF CONTRACT ..... 14
30-08 FAILURE TO EXECUTE CONTRACT ..... 14
30-09 DISPUTE & RESOLUTION. ..... 14

**SECTION 40 ..... 16**
**SCOPE OF WORK ..... 16**
40-01 INTENT OF CONTRACT ..... 16
40-02 ALTERATION OF WORK AND QUANTITIES ..... 16
40-03 OMITTED ITEMS ..... 16
40-04 EXTRA WORK ..... 17
40-05 MAINTENANCE OF TRAFFIC ..... 17
40-06 RIGHTS IN AND USE OF MATERIALS FOUND IN THE WORK ..... 18
40-07 FINAL CLEANING UP ..... 19

**SECTION 50** ..... **20**
**CONTROL OF WORK** ..... **20**
50-01 AUTHORITY OF THE OWNER'S ENGINEER ..... 20
50-02 CONFORMITY WITH PLANS AND SPECIFICATIONS ..... 20
50-03 COORDINATION OF CONTRACT, PLANS AND SPECIFICATIONS ..... 21
50-04 COOPERATION OF CONTRACTOR ..... 21
50-05 COOPERATION BETWEEN CONTRACTORS ..... 21
50-06 CONSTRUCTION LAYOUT AND STAKES ..... 22
50-07 AUTOMATICALLY CONTROLLED EQUIPMENT ..... 22
50-08 AUTHORITY AND DUTIES OF INSPECTORS ..... 22
50-09 INSPECTION OF THE WORK ..... 22
50-10 REMOVAL OF UNACCEPTABLE AND UNAUTHORIZED WORK ..... 23
50-11 LOAD RESTRICTIONS ..... 24
50-12 MAINTENANCE DURING CONSTRUCTION ..... 24
50-13 FAILURE TO MAINTAIN THE WORK ..... 24
50-14 PARTIAL ACCEPTANCE ..... 25
50-15 FINAL ACCEPTANCE ..... 25
50-17 GUARANTEE OF WORK (ADDITIONAL) ..... 26
50-18 CONSTRUCTION SCHEDULE ..... 26
50-19 NEGOTIATIONS WITH INDIVIDUAL CONTRACTORS ..... 26

**SECTION 60** ..... **28**
**CONTROL OF MATERIAL** ..... **28**
60-01 SOURCE OF SUPPLY AND QUALITY REQUIREMENTS ..... 28
60-02 SAMPLES, TESTS, AND CITED SPECIFICATIONS ..... 28
60-03 CERTIFICATION OF COMPLIANCE ..... 29
60-04 PLANT INSPECTION ..... 29
60-05 OWNER'S FIELD OFFICE AND LABORATORY ..... 30
60-06 STORAGE OF MATERIALS ..... 30
60-07 UNACCEPTABLE MATERIALS ..... 30
60-08 OWNER-FURNISHED MATERIALS ..... 30

**SECTION 70** ..... **32**
**LEGAL RELATIONS AND RESPONSIBILITY TO PUBLIC** ..... **32**
70-01 LAWS TO BE OBSERVED ..... 32
70-02 PERMITS, LICENSES, AND TAXES ..... 32
70-03 PATENTED DEVICES, MATERIALS, AND PROCESSES ..... 32
70-04 RESTORATION OF SURFACES DISTURBED BY OTHERS ..... 32
70-05 SANITARY, HEALTH, AND SAFETY PROVISIONS ..... 33
70-06 PUBLIC CONVENIENCE AND SAFETY ..... 34
70-07 BARRICADES, WARNING SIGNS AND HAZARD MARKINGS ..... 34
70-08 PROTECTION AND RESTORATION OF PROPERTY AND LANDSCAPE ..... 34
70-09 RESPONSIBILITY FOR DAMAGE CLAIMS ..... 35
70-10 CONTRACTOR'S INSURANCE ..... 35
70-11 THIRD PARTY BENEFICIARY CLAUSE ..... 36
70-12 OPENING SECTIONS OF THE WORK TO TRAFFIC ..... 36

70-13 CONTRACTOR'S RESPONSIBILITY FOR WORK ..... 36
70-14 CONTRACTOR'S RESPONSIBILITY FOR UTILITY SERVICE AND FACILITIES OF OTHERS .... 37
70-15 FURNISHING RIGHTS-OF-WAY ..... 38
70-16 PERSONAL LIABILITY OF PUBLIC OFFICIALS ..... 38
70-17 NO WAIVER OF LEGAL RIGHTS..... 38
70-18 ENVIRONMENTAL PROTECTION ..... 39

**SECTION 80 ..... 40**
**PROSECUTION AND PROGRESS ..... 40**
80-01 SUBLETTING OF CONTRACT ..... 40
80-02 NOTICE TO PROCEED ..... 40
80-03 PROSECUTION AND PROGRESS ..... 41
80-04 CONSTRUCTION LIMITS ..... 41
80-05 CHARACTER OF WORKERS, METHODS AND EQUIPMENT ..... 41
80-06 TEMPORARY SUSPENSION OF THE WORK..... 42
80-07 DETERMINATION AND EXTENSION OF CONTRACT TIME ..... 43
80-08 FAILURE TO COMPLETE ON TIME ..... 44
80-09 DEFAULT AND TERMINATION OF CONTRACT..... 45
80-10 TERMINATION FOR NATIONAL EMERGENCIES..... 46

**SECTION 90 ..... 47**
**MEASUREMENT AND PAYMENT..... 47**
90-01 MEASUREMENT OF QUANTITIES ..... 47
90-02 SCOPE OF PAYMENT ..... 50
90-03 COMPENSATION FOR ALTERED QUANTITIES ..... 50
90-04 PAYMENT FOR OMITTED ITEMS ..... 50
90-05 PAYMENT FOR EXTRA AND FORCE ACCOUNT WORK..... 51
90-06 ACCEPTANCE AND FINAL PAYMENT ..... 52

***SPECIAL PROVISIONS***

PROPOSED WORK.....SP-1
GENERAL REQUIREMENTS.....SP-1
POINTS AND INSTRUCTION AND AS-BUILTS .....SP-1
CONSTRUCTION LIMITS .....SP-2
OPERATION AND TRAFFIC CONTROL PLANS.....SP-3
QUALITY CONTROL PLAN .....SP-3
SAMPLING AND TESTING .....SP-3
MEASUREMENT AND PAYMENT .....SP-4
HAUL ROUTE .....SP-5
DUST CONTROL.....SP-5
TEMPORARY CONSTRUCTION EASEMENTS .....SP-5
OWNER'S FIELD OFFICE.....SP-6
BLASTING NOTIFICATION.....SP-6
CONFLICTING UTILITY SYSTEMS..... SP-6

DISPOSAL OF REMOVED VEGETATION OR UNSUITABLE MATERIALS ..... SP-6
KEYSTONE WALLS .....SP-6
WATERLINE CONSTRUCTION.....SP-7

***TECHNICAL SPECIFICATIONS***

109-FORCE ACCOUNT WORK .....T-1
201-CLEARING AND GRUBBING .....T-1
202-REMOVAL OF STRUCTURES AND OBSTRUCTIONS .....T-1
203-EARTH WORK .....T-2
209-FURNISH WATER SUPPLY .....T-2
211-FILL CONSTRUCTION .....T-2
301-SUBGRADE PREPARATION .....T-2
303-AGGREGATE SUBBASES AND AGGREGATE BASES .....T-2
321-ASPHALTIC CONCRETE PAVEMENT .....T-3
340-CONCRETE CURB, GUTTER, SIDEWALK, SIDEWALK RAMPS, DRIVEWAY AND ALLEY ENTRANCE.....T-3
405-MONUMENTS .....T-3
607-ROADSIDE SIGN SUPPORTS .....T-3
608-SIGN PANELS .....T-3
621-CORRUGATED METAL PIPE AND ARCHES .....T-3
701-MAINTENANCE AND PROTECTION OF TRAFFIC .....T-4
708-PAINTED PAVEMENT MARKINGS .....T-4
760-COATING CORRUGATED METAL PIPE AND ARCHES .....T-4
810-EROSION CONTROL AND POLLUTION PREVENTION (SWPPP) .....T-4
901-MOBILIZATION .....T-6
905-GUARD RAIL .....T-6
913-BANK PROTECTION .....T-6
925-CONSTRUCTION SURVEYING AND LAYOUT AND AS-BUILT DRAWINGS .....T-6

***CONTRACT FORMS***

PROPOSAL .....P-1
BIDDING SCHEDULE .....BS-1
SURETY (BID) BOND .....BB-1
QUALIFICATION AND CERTIFICATION .....QC-1
REFERENCE LIST .....RL-1
AFFIDAVIT OF NON-COLLUSION .....ANC-1
SUBCONTRACTOR CERTIFICATION .....SC-1
CHECKLIST AND ADDENDA ACKNOWLEDGMENT .....CK-1
CONTRACT .....C-1
CONTRACT PERFORMANCE BOND .....CPB-1
LABOR AND MATERIALS BOND .....LMB-1
CONTRACT PERFORMANCE WARRANTY .....CWP-1
IRS W-9 FORM .....W-9

**GENERAL PROVISIONS**
**Bid No. 111311-1**

# SECTION 01

## NOTIFICATION TO BIDDERS

**BIDDERS ARE HEREBY NOTIFIED:**

1. The bidder must supply all the information required by the bidding documents or specifications. All proposals shall be made on the bid proposal forms prepared by Gila County as part of the Contract Documents. The proposal must include the following forms, **all with original signatures**, must accompany the bidders proposal:

   - Bid Proposal (pages P-1 to P-3)
   - Qualification & Certification Form (pages QC-1 to QC-2)
   - Reference List (RL1)
   - Bid Schedule (pages BS-1 to BS-6)
   - Surety (Bid) Bond (page BB-1)
   - Affidavit of Non-Collusion (page ANC-1)
   - Subcontracting Certification (page SC-1)
   - Check List & Addenda Acknowledgment (CK-1)
   - Contract (C1-C7)
   - IRS W-9 Form (W-9)

   **Failure to include all required documents, all with original signatures, may invalidate the bid. Prices shall include all applicable taxes.**

2. **Proposal Guaranty** -Proposals shall be accompanied by a certified check, cashier's check or bid bond for 10 percent (10%) of the total contract price bid.

3. **Delivery of Proposal** - Each bid shall be sealed and plainly marked **"Bid No. 111311-1 PINE CREEK CANYON ROAD RECONSTRUCTION PROJECT"**, on the outer most envelope or label. If courier is used, bidder shall instruct the courier to deliver the package by **Thursday, March 1st, 2012**, **11:00 a.m.** on the date specified herein, to the Gila County Procurement, 1400 East Ash, Globe, Arizona 85501. **No bids will be accepted after 11:00 A.M. AZ Time, Thursday, March 1st, 2012. Bids will be opened at 11:00 A.M., Thursday, March 1st, 2012.**

4. **Rejection of Bids** -The Owner reserves the right to reject any and all bids, waive all or any informalities in the bids.

5. **Plans and Specifications** -Plans, specifications and all other documents required by bidders may be obtained at the address shown below. **A deposit of $20 per set, and $10 for mailing, $20 of which will be refunded upon return of the documents in good, usable order within seven (7) days of bid award. Payment shall be by check or money order only. No cash will be accepted.**

Gila County
Public Works Division
745 North Rose Mofford Way
Globe, Arizona 85501

6. **Arizona Contractor's License** -**Prior to submission of bids**, bidders must have a valid Arizona Contractor's License of a type which meets all criteria and requirements to perform the work as specified in the contract documents in accordance with the **Arizona State Registrar of Contractors**.

7. **Bid Opening Information** - Information regarding the bid award will not be available until after the Gila County Board of Supervisors has issued a decision regarding the submitted project bids. This will be the only time, until bid award, this information will be revealed.

8. **Mandatory Pre-Bid Walk Through**
There is a mandatory site walk through scheduled for **10:00 A.M. (AZ Time), Friday, January 27th, 2012**. Meeting shall be held at the Pine Community Center, Cultural Hall, Highway 87 , Pine, Arizona. Only those companies signed in on the walk through sign-in sheet will be permitted to bid.

9. **Request for Clarifications**
Requests for clarification shall be made to Ms. Valrie Bejarano (vbejarano@co.gila.az.us) in writing (phone: 928-402-8612 fax: 928-425-8104) submitted no later than **Friday, February 3rd, 2012 at 12:00 Noon.** A response will be issued to all plan holders no later than **Friday, February 10th, 2012 at 2:00 P.M.**

# GENERAL PROVISIONS

## SECTION 10

### DEFINITION OF TERMS

Whenever the following terms are used in these specifications, in the contract, in any documents or other instruments pertaining to construction where these specifications govern, the intent and meaning shall be interpreted as follows:

**10-00 M.A.G.** Uniform Standard Specifications for Public Works Construction (Latest Edition and Revisions). Maricopa Association of Governments.

**10-01 ACCESS ROAD.** The right-of-way, the roadway and all improvements constructed thereon.

**10-02 ADOT.** Arizona Department of Transportation

**10-03 ADOT STANDARD SPECIFICATIONS.** "Arizona Department of Transportation Standard Specifications for Road and Bridge Construction, Revised Edition 2000", and all revisions.

**10-04 ADVERTISEMENT.** A public announcement, as required by local law, inviting bids for work to be performed and materials to be furnished.

**10-05 ASTM.** The American Society for Testing and Materials.

**10-05a AASHTO.** The American Association of State Highway and Transportation Officials.

**10-06 AWARD.** The acceptance, by the Owner, of the successful bidder's proposal.

**10-07 BIDDER.** Any individual, partnership, firm, or corporation, acting directly or through a duly authorized representative, who submits a proposal for the work contemplated.

**10-08 BUILDING AREA.** An area to be used, considered, or intended to be used for a building or other facilities or rights-of-way together with all buildings and facilities located thereon.

**10-09 CALENDAR DAY.** Every day shown on the calendar.

**10-09a CERTIFIED FLAGGER.** An individual who has been trained and certified by the Arizona Department of Transportation, an Arizona County or Municipal agency, the Federal Highway Administration, or the Highway agency of another state, to control traffic in a construction zone. Individuals certified outside Arizona must also exhibit familiarity with Arizona laws.

**10-10 CHANGE ORDER.** A written order by the Engineer or Owner to the Contractor covering changes in the plans, specifications, or proposal quantities and establishing the basis of payment and contract time adjustment, if any, for the work affected by such changes. The work, covered by a change order, shall be within the scope of the contract.

**10-11 CONTRACT.** The written agreement covering the work to be performed. The awarded contract shall include, but is not limited to: the Advertisement; the Contract form; the Proposal; the Performance Bond; the Payment Bond; any required insurance certificates; the Specifications; the Plans; and any addenda issued to bidders.

**10-12 CONTRACT ITEM (PAY ITEM).** A specific unit of work for which a price is provided in the contract. All pay items on this contract will be measured in English units.

**10-13 CONTRACT TIME.** The number of calendar days or working days, stated in the proposal, allowed for completion of the contract, including authorized time extensions. If a calendar date of completion is stated in the proposal, in lieu of a number of calendar or working days, the contract shall be completed by that date.

**10-14 CONTRACTOR.** The individual, partnership, firm, or corporation primarily liable for the acceptable performance of the work contracted and for the payment of all legal debts pertaining to the work who acts directly or through lawful agents or employees to complete the contract work.

**10-15 CONTRACTOR'S ENGINEER.** The Arizona Registered Professional Civil Engineer, individual, partnership, firm, or corporation, duly authorized by Contractor to be responsible for engineering supervision, quality control and certification of the Contract work.

**10-15a DEPARTMENT.** The term Department in the ADOT Standard Specifications and supplements references the Arizona Department of Transportation. Department shall reference OWNER for this contract work.

**10-16 ENGINEER.** See OWNER.

**10-17 EQUIPMENT.** All machinery, together with the necessary fuel and supplies for upkeep and maintenance including, but not limited to, all tools and apparatus necessary for the proper construction and acceptable completion of the work.

**10-18 EXTRA WORK.** An item of work not provided for in the awarded contract as previously modified by change order or supplemental agreement, but which is found by the Owner's Engineer to be necessary to complete the work within the intended scope of the contract as previously modified.

**10-19 INSPECTOR.** An authorized representative of the Owner's Engineer assigned to make all necessary quality assurance inspections and/or tests of the work performed or being performed, or of the materials furnished or being furnished by the Contractor.

**10-20 INTENTION OF TERMS.** Whenever, in these specifications or on the plans, the words "directed," "required," "permitted," "ordered," "designated," "prescribed," or words of the like import are used, it shall be understood that the direction, requirement, permission, order, designation, or prescription of the Owner's Engineer is intended; and similarly, the words, "approved," "acceptable," "satisfactory," or words of like import, shall mean approved by, or acceptable to, or satisfactory to the Owner's Engineer, subject in each case to the final determination of the Owner.

Any reference to a specific requirement of a numbered paragraph of the contract specifications or a cited standard shall be interpreted to include all general requirements of the entire section, specification item, or cited standard that may be pertinent to such specific reference.

**10-21 LABORATORY.** A testing laboratory as may be designated or approved by the Owner's Engineer to test construction materials and products.

**10-22 LABOR AND MATERIALS BOND.** The approved form of security furnished by the Contractor and his surety as a guaranty that he will pay in full all bills and accounts for materials and labor used in the construction of the work. Also known as Payment Bond.

**10-23 MAJOR AND MINOR CONTRACT ITEMS.** A major contract item shall be any item that is listed in the proposal, the total cost of which is equal to or greater than 10 percent of the total amount of the awarded contract. All other items shall be considered minor contract items.

**10-24 MATERIALS.** Any substance specified for use in the construction of the contract work.

**10-24a MUTCD.** The *Manual on Uniform Traffic Control Devices for Streets and Highways*, U.S. Department of Transportation, Federal Highway Administration, Millennium Edition, with current revisions.

**10-25 NOTICE TO PROCEED.** A written notice to the Contractor to begin the actual contract work on a previously agreed to date. If applicable, the Notice to Proceed shall state the date on which the contract time begins.

**10-26 OWNER (SPONSOR).** The term Owner shall mean the party of the first part or the contracting agency signatory to the contract.

**10-27 OWNER'S ENGINEER.** The individual, partnership, firm, or corporation duly authorized by the Owner (sponsor) to be responsible for engineering supervision of the contract work and acting directly or through an authorized representative. The Owner's Engineer is:

C.L. Williams Consulting Inc.
621 South Hillside Lane
Pinetop, Arizona 85935
(928) 367-2248

Contacts: Joseph M. Alwin, P.E. (joe@clwilliams.net)

**10-28 PAVEMENT.** The combined surface, base course, and sub base course, if any, considered as a single unit.

**10-29 PERFORMANCE BOND.** The approved form of security furnished by the Contractor and his surety as a guaranty that the Contractor will complete the work in accordance with the terms of the contract.

**10-30 PLANS.** The official drawings or exact reproductions, approved by the Owner's Engineer, which show the location, character, dimensions and details of the work to be done and which are to be considered as a part of the contract, supplementary to the specifications.

**10-31 PROJECT.** The agreed scope of work for accomplishing specific tasks.

**10-32 PROPOSAL.** The written offer of the bidder (when submitted on the approved proposal form) to perform the contemplated work and furnish the necessary materials in accordance with the provisions of the plans and specifications.

**10-33 PROPOSAL GUARANTY.** The security furnished with a proposal to guarantee that the bidder will enter into a contract if his proposal is accepted by the Owner.

**10-34 SPECIFICATIONS.** A part of the contract containing the written directions and requirements for completing the contract work. Standards for specifying materials or testing which are cited in the contract specifications by reference shall have the same force and effect as if included in the contract physically.

**10-35 STRUCTURES.** Facilities such as bridges, culverts, catch basins, inlets, retaining walls, cribbing, storm and sanitary sewer lines, water lines, underdrains, electrical ducts, manholes, handholes, lighting fixtures and bases, transformers, flexible and rigid pavements, navigational aids, buildings, vaults, and other manmade features that may be encountered in the work and not otherwise classified herein.

**10-36 SUBGRADE.** The soil that forms the pavement foundation.

**10-37 SUPERINTENDENT.** The Contractor's authorized representative who is present on the work site during progress, and is authorized to receive and fulfill instructions from the Owner's Engineer, and who shall supervise and direct the construction.

**10-38 SUPPLEMENTAL AGREEMENT.** A written agreement between the Contractor and the Owner covering: 1) work that would increase or decrease the total dollar amount of the awarded contract, or any major contract item, by more than 25 percent, such increased or decreased work being within the scope of the originally awarded contract, or 2) work that is not within the scope of the originally awarded contract.

**10-39 SURETY.** The corporation, partnership, or individual, other than the Contractor, executing payment or performance bonds which are furnished to the Owner by the Contractor.

**10-40 WORK.** The furnishing of all labor, materials, tools, equipment and incidentals necessary or convenient to the Contractor's performance of all duties and obligations imposed by the contract, plans, and specifications.

**10-41 WORK DAY, WORKING DAY.** A work day shall be any day other than a legal holiday, Saturday, or Sunday on which the normal working forces of the Contractor may proceed with regular work for at least 6 hours toward completion of the contract, unless work is suspended for causes beyond the Contractor's control. Saturdays, Sundays and holidays on which the Contractor's forces engage in regular work, after obtaining written permission from the Public Works Director, or his authorized representative, which requires the presence of an inspector, will be considered and applied as working days.

**10-42 WORK WEEK.** A work week shall consist of forty (40) hours beginning on Sunday and ending on Saturday. Should the Contractor engage in work exceeding the forty (40) hour work week which requires the presence of an inspector, as determined by the County Public Works Director or his authorized representative, the Contractor shall reimburse the County for all overtime hours as 10-43.

**10-43 OVERTIME HOURS.** Any and all hours worked which are other than a normal work week as defined under 10-42. Contractor must give prior written notification to the Public Works Director or his authorized representative, for any and all overtime hours to be worked. It shall be at the Owner's discretion to provide an inspector at the worksite to ensure compliance during any and all overtime hours worked.

**10-44 OVERTIME PAY.** Any and all pay resulting from overtime hours worked.

**10-45 OWNER'S INSPECTOR'S OVERTIME PAY.** Any and all pay to the Owner's Inspector for overtime hours worked resulting from the Contractor having received approval for overtime hours. The inspector's overtime pay shall be the actual monies paid by the County and shall be reimbursed by the Contractor to the County. Certified payrolls for the Owner's Inspector's Overtime will be submitted to the Contractor. The cost for the Owner's Inspector's Overtime Pay will be deducted from the Contractor's billing.

**10-46 SUBSTANTIAL COMPLETION.** See the ADOT Standard Specification Section 105.19

# SECTION 20

## PROPOSAL REQUIREMENTS AND CONDITIONS

**20-03 CONTENTS OF PROPOSAL FORMS.** The Owner shall furnish bidders with proposal forms. All papers bound with or attached to the proposal forms are necessary parts of the proposal..

The plans, specifications, and other documents designated in the proposal whether attached or not to the proposal are considered as a part of and included with the proposal.

**20-04 ISSUANCE OF PROPOSAL FORMS.** The Owner reserves the right to refuse to issue a proposal form to a prospective bidder should such bidder be in default for any of the following reasons:

(a) Failure to comply with any prequalification regulations of the Owner, if such regulations are cited, or otherwise included, in the proposal as a requirement for bidding.
(b) Failure to pay, or satisfactorily settle, all bills due for labor and materials on former contracts in force (with the Owner) at the time the Owner issues the proposal to a prospective bidder.
(c) Contractor default under previous contracts with the Owner.
(d) Unsatisfactory work on previous contracts with the Owner.

**20-05 INTERPRETATION OF ESTIMATED PROPOSAL QUANTITIES.** An estimate of quantities of work to be done and materials to be furnished under these specifications is given in the proposal. It is the result of careful calculations and is believed to be correct. It is given only as a basis for comparison of proposals and the award of the contract. The Owner does not expressly or by implication agree that the actual quantities involved will correspond exactly therewith; nor shall the bidder plead misunderstanding or deception because of such estimates of quantities, or of the character, location, or other conditions pertaining to the work. **Payment to the Contractor will be made only for the actual quantities of work performed or materials furnished in accordance with the plans and specifications.** It is understood that the quantities may be increased or decreased as hereinafter provided in the subsection titled ALTERATION OF WORK AND QUANTITIES of Section 40-02 without in any way invalidating the unit bid prices.

**20-06 EXAMINATION OF PLANS, SPECIFICATIONS, AND SITE.** The bidder is expected to carefully examine the site of the proposed work, the proposal, plans, specifications, and contract forms. He shall satisfy himself as to the character, quality, and quantities of work to be performed, materials to be furnished, and as to the requirements of the proposed contract. The submission of a proposal shall be prima facie evidence that the bidder has made such examination and is satisfied as to the conditions to be encountered in performing the work and as to the requirements of the proposed contract, plans and specifications.

If any person contemplating submitting a bid for the proposed contract is in doubt as to the true meaning of any part of the plans, specifications, or other proposed contract documents, or finds discrepancies in, or omissions from the drawings or specifications, he may submit to the Owner's Engineer a written request for an interpretation or correction thereof. The person submitting the request will be responsible for its prompt delivery. Any interpretation or correction of the contract documents will be made only by addendum duly issued and a copy of such addendum will be made or delivered to each person having received a set of such documents. The Owner will not be responsible for any other explanations or interpretations of the contract documents.

Any addenda or bulletins issued during the time of bid preparations, forming a part of the contract documents furnished the bidder for the preparation of his bid, shall be covered in the bid, and shall be made a part of the contract.

**20-07 PREPARATION OF PROPOSAL** The bidder shall submit his proposal on the forms furnished by the Owner. All blank spaces in the proposal forms must be correctly filled in where indicated for each and every item for which a quantity is given. The bidder shall state the price (written in ink or typed) in NUMERALS for which he proposes to do each pay item furnished in the proposal. The TOTAL AGGREGATE AMOUNT bid shall be stated in both WORDS and NUMERALS. A minimum of one (1) original and two (2) copies all with original signatures shall be submitted.

The bidder shall sign his proposal correctly and in ink. If the proposal is made by an individual, his name and mailing address must be shown. If made by a partnership, the name and mailing address of each member of the partnership must be shown. If made by a corporation, the person signing the proposal shall give the name of the state under which the laws of the corporation were chartered and the name, titles, and business address of the president, secretary, and the treasurer. Anyone signing a proposal as an agent shall file evidence of his authority to do so and that the signature is binding upon the firm or corporation.

**20-08 IRREGULAR PROPOSALS.** Proposals shall be considered irregular for the following reasons:

(a) If the proposal is on a form other than that furnished by the Owner, or if the Owner's form is altered, or if any part of the proposal form is detached.
(b) If there are unauthorized additions, conditional or alternate pay items, or irregularities of any kind which make the proposal incomplete, indefinite, or otherwise ambiguous.
(c) If the proposal does not contain a unit price for each pay item listed in the proposal, except in the case of authorized alternate pay items, for which the bidder is not required to furnish a unit price.
(d) If the proposal contains unit prices that are obviously unbalanced.
(e) If the proposal is not accompanied by the proposal guaranty specified by the Owner.

The Owner reserves the right to reject any irregular proposal and the right to waive technicalities if such waiver is in the best interest of the Owner and conforms to local laws and ordinances pertaining to the letting of construction contracts.

**20-09 PROPOSAL GUARANTY.** Each proposal shall be accompanied by a certified check, cashier's check or surety bond for ten percent (10%) of the amount of the bid included in the proposal as a guarantee that the Contractor will enter into a contract to perform the proposed work in accordance with the plans and specifications.

**20-10 DELIVERY OF PROPOSAL.** Each proposal submitted shall be placed in a sealed envelope plainly marked with the project number, name of project, and name and business address of the bidder on the outside. When sent by mail, preferably registered, or courier, the sealed proposal, marked as indicated above, should be enclosed in an additional envelope. No proposal will be considered unless received at the place specified in the advertisement before the time specified. Proposals received after the specified time shall be returned to the bidder unopened.

**20-11 WITHDRAWAL OR REVISION OF PROPOSALS.** A bidder may withdraw or revise (by withdrawal of one proposal and submission of another) a proposal provided that the bidder's request for withdrawal is received by the Owner in writing or by telegram before the time specified for receipt of bids. Revised proposals must be received at the place specified in the advertisement before the time specified for receipt of bids.

**20-12 PUBLIC OPENING OF PROPOSALS.** Proposals shall be opened and read publicly at the time and place specified in the advertisement. Bidders, their authorized agents, and other interested persons are invited to attend.

Proposals that have been withdrawn (by written or telegraphic request) or received after the time specified shall be returned to the bidder unopened.

This will be the only time, until bid award, this information will be revealed.

**20-13 DISQUALIFICATION OF BIDDERS.** A bidder shall be considered disqualified for any of the following reasons:

(a) Submitting more than one proposal from the same partnership, firm, or corporation under the same or different name.
(b) Evidence of collusion among bidders. Bidders participating in such collusion shall be disqualified as bidders for any future work of the Owner until any such participating bidder has been reinstated by the Owner as a qualified bidder.
(c) If the bidder is considered to be in "default" for any reason specified in the subsection titled ISSUANCE OF PROPOSAL FORMS of Section 20-04.
(d) Failure to submit all required official bid forms.

**20-14 PROTESTS.** Only other bidders have the right to protest. A protest of a proposed award or of an award must be filed within ten (10) days after the bid award by the Gila County Board of Supervisors and must be sent to the Board of Supervisors. A protest must be in writing and must include:

(a) Name, address and telephone number of the protester.
(b) Signature of the protester or its representative, and evidence of authority to sign.
(c) Identification of the contract and the solicitation or contract number.
(d) Detailed statement of the legal and factual grounds of protest including copies of relevant documents.
(e) The form of relief requested.

All protests shall be sent to the attention of the Gila County Board of Supervisors, 1400 E. Ash Street, Globe, Arizona 85501

# SECTION 30

## AWARD AND EXECUTION OF CONTRACT

**30-01 CONSIDERATION OF PROPOSALS.** After the proposals are publicly opened and read, they will be compared on the basis of the summation of the products obtained by multiplying the estimated quantities shown in the proposal by the unit bid prices. If a bidder's proposal contains a discrepancy between unit bid prices written in words and unit bid prices written in numbers, the unit price written in words, unless obviously incorrect, shall govern.

Until the award of a contract is made, the Owner reserves the right to reject a bidder's proposal for any of the following reasons:

(a) If the proposal is irregular as specified in the subsection titled IRREGULAR PROPOSALS of Section 20-08.
(b) If the bidder is disqualified for any of the reasons specified in the subsection titled DISQUALIFICATION OF BIDDERS of Section 20-13.

In addition, until the award of a contract is made, the Owner reserves the right to reject any or all proposals; waive technicalities, if such waiver is in the best interest of the Owner and is in conformance with applicable state and local laws or regulations pertaining to the letting of construction contracts; advertise for new proposals; or proceed with the work otherwise. All such actions shall promote the Owner's best interests.

**30-02 AWARD OF CONTRACT.** The award of contract, if it is to be awarded, shall be made within sixty (60) calendar days of the date specified for publicly opening proposals, unless otherwise specified herein.

This contract will be awarded to the responsible bidder whose bid conforms to the invitation and whose bid is the most advantageous to the Owner concerning price, conformity to the specifications and other factors.

**30-03 CANCELLATION OF AWARD.** The Owner reserves the right to cancel the award without liability to the bidder, except return of proposal guaranty, at any time before a contract has been fully executed by all parties and is approved by the Owner in accordance with the subsection titled APPROVAL OF CONTRACT of Section 30-07.

**30-04 RETURN OF PROPOSAL GUARANTY.** All proposal guaranties, except those of the two (2) lowest bidders, will be returned immediately after the Owner has made a comparison of bids as hereinbefore specified in the subsection titled CONSIDERATION OF PROPOSALS of Section 30-01. Proposal guaranties of the two lowest bidders will be retained by the Owner until such time as an award is made, at which time the unsuccessful bidder's proposal guaranty will be returned as soon as the Owner receives the contract bonds as specified in the subsection titled REQUIREMENTS OF CONTRACT BONDS of Section 30-05.

**30-05 REQUIREMENTS OF CONTRACT BONDS.** At the time of the execution of the contract, the successful bidder shall furnish the Owner surety bond or bonds which have been fully executed by the bidder and his surety guaranteeing the performance of the work and the payment of all legal debts that may be incurred by reason of the Contractor's performance of the work. The surety and the form of the bond or bonds shall be acceptable to the Owner. Unless otherwise specified in this subsection, the surety bond or bonds shall be in a sum equal to the full amount of the contract. All bonds shall conform to the requirements of A.R.S. §34-222 and §34-223. §

**30-06 EXECUTION OF CONTRACT.** The successful bidder shall sign (execute) the necessary agreements for entering into the contract and return such signed contract to the Owner, along with the fully executed surety bond or bonds specified in the subsection titled REQUIREMENTS OF CONTRACT BONDS of Section 30-05, the Contractor's Statement of Insurance and an original Certificate of Insurance conforming with the requirements of Section 70-10, within 10 calendar days from the date mailed or otherwise delivered to the successful bidder. If the contract is mailed, special handling is recommended.

**30-07 APPROVAL OF CONTRACT.** Upon receipt of the contract and contract bond or bonds that have been executed by the successful bidder, the Owner shall complete the execution of the contract in accordance with local laws or ordinances, and return the fully executed contract to the Contractor. Delivery of the fully executed contract to the Contractor shall constitute the Owner's approval to be bound by the successful bidder's proposal and the terms of the contract. **This agreement is subject to cancellation pursuant to A.R.S. §38-511.**

**30-08 FAILURE TO EXECUTE CONTRACT.** Failure of the successful bidder to execute the contract as specified in the subsection titled EXECUTION OF CONTRACT of Section 30-06 and furnish an acceptable surety bond or bonds within the 10-calendar-day period specified in the subsection titled REQUIREMENTS OF CONTRACT BONDS of Section 30-05 shall be just cause for cancellation of the award and forfeiture of the proposal guaranty, not as a penalty, but as liquidation of damages to the Owner.

**30-09 DISPUTE & RESOLUTION.**

- **Initial Notification & Dispute of Resolution:** As required by these Specifications or any time the Contractor believes the action or decision of the County, lack of action by the County, or for some other reason will result in or necessitate the revision of the Contract, the County Engineer must be notified immediately. If within two (2) working days the identified issue has not been resolved between the Contractor and the County, the Contractor shall provide a written notice. At a minimum, the written notice shall provide a description of the nature of the issue, the time and date the problem was discovered, and if appropriate, the location of the issue. After initial written notice has been provided, the County Engineer will proceed in accordance with *MAG Uniform Standard Specifications Subsection 104.2.* In addition to proceeding in accordance with *Subsection 104.2,* the Contractor and the County must make every effort to resolve the issue identified in the initial notice. Only if the issue cannot be quickly resolved will it be necessary to proceed to the next step in accordance with *MAG Specs Subsection 110.2.2 Dispute Resolution.*

- **Process for Dispute Resolution:** If the Contractor rejects the decision of the County according to *Subsection 110.2.2(B)*, the Contractor may begin the Administration Process to resolve the dispute. All dispute resolutions shall be handled in accordance with *MAG Spec's Subsection 110.3, Administrative Process for Dispute Resolution.*

The administrative process for the resolution of disputes is sequential in nature and is composed of the following levels: Level I (County Project Manager), Level II (County Engineer, Level III (Public Works Director).

The provision set forth in *Subsection 110.2* is a contractual obligation assumed by the Contractor in executing the Contract. It is understood that the Contractor will be forever barred from recovering against the County if the Contractor fails to give notice of any act or failure to act, by the County, or the happening of any event, thing, or occurrence, in accordance with *Subsection 104.2*, Alteration of Work.

- **Dispute Review Board:** If the Dispute Review Board is utilized as prescribed in *Subsection 110.3.3*, the County Engineer shall be notified within thirty (30) days after the Level III Representative decision. The Dispute Review Board is a three (3) member board independent of the parties involved in the issue. The County and Contractor shall each select a member for this board. The third (3rd) member shall be a mutually agreed upon independent member. This Review Board must be selected within fourteen (14) calendar days after notice to the Level III Representative. Each member shall agree to impartially serve the County and Contractor. Fees and expenses of the Board Members are to be shared equally by the County and the Contractor. The Dispute Review Board shall meet within thirty (30) days of the selection of the board, unless, by mutual agreement, another date is selected. The scope of the Dispute Review Board shall be restricted and limited to the matters originally presented to the Level III Representative for decision or determination and shall include no other matters. The Board shall consider and evaluate the dispute and render a written decision that assigns financial responsibilities and allocates adjustments in the contact time, if applicable, within seven (7) calendar days after the meeting. The decision of the Dispute Review Board will be final.

# SECTION 40

## SCOPE OF WORK

**40-01 INTENT OF CONTRACT.** The intent of the contract is to provide for construction and completion, in every detail, of the work described. It is further intended that the Contractor shall furnish all labor, materials, equipment, tools, and supplies required to complete the work in accordance with the plans, specifications, and terms of the contract.

**40-02 ALTERATION OF WORK AND QUANTITIES.** The Owner reserves and shall have the right to make such alterations in the work as may be necessary or desirable to complete the work originally intended in an acceptable manner. Unless otherwise specified herein, the Owner's Engineer shall be and is hereby authorized to make such alterations in the work as may increase or decrease the originally awarded contract quantities, provided that the aggregate of such alterations does not change the total contract cost or the total cost of any major contract item by more than twenty-five percent (25%) (total cost being based on the unit prices and estimated quantities in the awarded contract). Alterations which do not exceed the twenty-five percent (25%) limitation shall not invalidate the contract nor release the surety, and the Contractor agrees to accept payment for such alterations as if the altered work had been a part of the original contract. These alterations which are for work within the general scope of the contract shall be covered by "Change Orders" issued by the Owner's Engineer. Change order for altered work shall include extensions of contract time where, in the Owner's Engineer's opinion, such extensions are commensurate with the amount and difficulty of added work.

Should the aggregate amount of altered work exceed the twenty-five percent (25%) limitation hereinbefore specified, such excess altered work shall be covered by supplemental agreement. If the Owner and the Contractor are unable to agree on a unit adjustment for any contract item that requires a supplemental agreement, the Owner reserves the right to terminate the contract with respect to the item and make other arrangements for its completion.

All supplemental agreements shall require consent of the Contractor's surety and separate performance and payment bonds.

**40-03 OMITTED ITEMS.** The Owner's Engineer may, in the Owner's best interest, omit from the work any contract item, except major contract items. Major contract items may be omitted by a supplemental agreement. Such omission of contract items shall not invalidate any other contract provision or requirement.

Should a contract item be omitted or otherwise ordered to be non-performed, the Contractor shall be paid for all work performed toward completion of such item prior to the date of the order to omit such item. Payment for work performed shall be in accordance with the subsection titled PAYMENT FOR OMITTED ITEMS of Section 90-04.

**40-04 EXTRA WORK.** Should acceptable completion of the contract require the Contractor to perform an item of work for which no basis of payment has been provided in the original contract or previously issued change orders or supplemental agreements, the same shall be called EXTRA WORK. Extra work that is within the general scope of the contract shall be covered by written change order. Change orders for such extra work shall contain agreed unit prices for performing the change order work in accordance with the requirements specified in the order, and shall contain any adjustment to the contract time that, in the Owner's Engineer's opinion, is necessary for completion of such extra work.

When determined by the Owner's Engineer to be in the Owner's best interest, he may order the Contractor to proceed with extra work by force account as provided in the subsection titled PAYMENT FOR EXTRA AND FORCE ACCOUNT WORK of Section 90-05.

Extra work that is necessary for acceptable completion of the project, but is not within the general scope of the work covered by the original contract, shall be covered by an agreement as hereinbefore defined in the subsection titled SUPPLEMENTAL AGREEMENT of Section 10-38.

Any claim for payment of extra work that is not covered by written agreement (change order or supplemental agreement) shall be rejected by the Owner.

**40-05 MAINTENANCE OF TRAFFIC.** It is the explicit intention of the contract that the safety of all traffic, vehicular and pedestrian, as well as the Contractor's equipment and personnel, is the most important consideration.

With respect to his own operations and the operations of all his subcontractors, the Contractor shall provide marking, lighting, and other acceptable means of identifying personnel, equipment, vehicles, storage areas, and any work area or condition that may be hazardous to the operation of all traffic, vehicular and pedestrian.

When the contract requires the maintenance of vehicular traffic on an existing road, street, or highway during the Contractor's performance of work that is otherwise provided for in the contract, plans, and specifications, the Contractor shall keep such road, street, or highway open to all traffic and shall provide such maintenance as may be required to accommodate traffic. The Contractor shall furnish, erect, and maintain barricades, warning signs, flaggers, and other traffic control devices in reasonable conformity with the Manual of Uniform Traffic Control Devices for Streets and Highways (MUTCD) PART VI, (published by the United States Government Printing Office), unless otherwise specified herein. The Contractor shall also construct and maintain in a safe condition any temporary connections necessary for ingress to and egress from abutting property or intersecting roads, streets or highways. Unless otherwise specified herein, the Contractor will not be required to furnish snow removal for such existing road, street, or highway.

The Contractor shall make his own estimate of all labor, materials, equipment, and incidentals necessary for providing the maintenance of pedestrian and vehicular traffic as specified in this subsection.

**40-06 RIGHTS IN AND USE OF MATERIALS FOUND IN THE WORK.** Should the Contractor encounter any materials such as (but not restricted to) sand, stone, gravel, slag, or concrete slabs within the established lines, grades, or grading sections, the use of which is intended by the terms of the contract to be either embankment or waste, he may at his option either:

(a) Use such material in another contract item, providing such use is approved by the Owner's Engineer and is in conformance with the contract specifications applicable to such use; or,
(b) Remove such material from the site, upon written approval of the Owner's Engineer; or,
(c) Use such material for his own temporary construction on site; or,
(d) Use such material as intended by the terms of the contract.

Should the Contractor wish to exercise option (a), (b), or (c), he shall request the Owner's Engineer's approval in advance of such use. Should the Owner's Engineer approve the Contractor's request to exercise option (a), (b), or (c), the Contractor shall be paid for the excavation or removal of such material at the applicable contract price. The Contractor shall replace, at his own expense, such removed or excavated material with an agreed equal volume of material that is acceptable for use in constructing embankment, backfills, or otherwise to the extent that such replacement material is needed to complete the contract work. The Contractor shall not be charged for his use of such material so used in the work or removed from the site.

Should the Owner's Engineer approve the Contractor's exercise of option (a), the Contractor shall be paid, at the applicable contract price, for furnishing and installing such material in accordance with requirements of the contract item in which the material is used.

It is understood and agreed that the Contractor shall make no claim for delays by reason of his exercise of option (a), (b), or (c).

The Contractor shall not excavate, remove, or otherwise disturb any materials, structure, or part of a structure which is located outside the lines, grades, or grading sections established for the work, except where such excavation or removal is provided for in the contract, plans, or specifications.

**40-07 FINAL CLEANING UP.** Upon completion of the work and before acceptance and final payment will be made, the Contractor shall remove from the site all machinery, equipment, surplus and discarded materials, rubbish, temporary structures, and stumps or portions of trees. He shall cut all brush and woods within the limits indicated and shall leave the site in a neat and presentable condition. Material cleared from the site and deposited on adjacent property will not be considered as having been disposed of satisfactorily, unless the Contractor has obtained the written permission of such property owner and furnished a copy to the Owner's Engineer.

# SECTION 50

## CONTROL OF WORK

**50-01 AUTHORITY OF THE OWNER'S ENGINEER.** The Owner shall decide any and all questions which may arise as to the quality and acceptability of materials furnished, based upon the Contractor's Engineer's certification for the quality and acceptability work performed, and as to the manner of performance and rate of progress of the work. He shall decide all questions which may arise as to the interpretation of the specifications or plans relating to the work, the fulfillment of the contract on the part of the Contractor, and the rights of different contractors on the project. The Owner shall review and determine, based upon the Contractor's Engineer's certifications on amounts, quality of work and materials furnished, the amount and quality of the several kinds of work performed and materials furnished which are to be paid for under contract.

**50-02 CONFORMITY WITH PLANS AND SPECIFICATIONS.** All work and materials furnished shall be the full responsibility of the Contractor and shall be in reasonably close conformity with the lines, grades, grading section, cross sections, dimensions, material requirements, and testing requirements that are specified (including specified tolerances) in the contract, plans, or specifications, and shall be certified by the Contractor's Engineer.

If the Owner finds the materials furnished, work performed, or the finished product not within reasonably close conformity with the plans and specifications, but that the portion of the work affected will, in his opinion, result in a finished product having a level of safety, economy, durability and workmanship acceptable to the Owner, he will advise the Owner of his determination that the affected work be accepted and remain in place. In this event, the Owner will document his determination and recommend to the Owner a basis of acceptance which will provide for an adjustment in the contract price for the affected portion of the work. The Owner's determination and recommended contract price adjustments will be based on good engineering judgment and on such tests or retests by the Contractor's Engineer, and at the Contractor's expense, of the affected work as are, in his opinion, needed. Changes in the contract price shall be covered by contract modifications (change order or supplemental agreement) as applicable.

If the Owner finds the materials furnished, work performed, or the finished product are not in reasonably close conformity with the plans and specifications and have resulted in an unacceptable finished product, the affected work or materials shall be removed and replaced or otherwise corrected by and at the expense of the Contractor in accordance with the Owner written orders.

For the purpose of this subsection, the term "reasonably close conformity" shall not be construed as waiving the Contractor's responsibility to complete the work in accordance with the contract, plans and specifications. The terms shall not be construed as waiving the Owner's right to insist on strict compliance with the requirements of the contract, plans, and specifications during the Contractor's prosecution of the work, when, in the Owner's opinion, such compliance is essential to provide an acceptable finished portion of the work.

For the purpose of this subsection, the term "reasonably close conformity" is also intended to provide the Owner with the authority to use good engineering judgment in his determinations as to acceptance of work that is not in strict conformity but will provide a finished product equal to or better than that intended by the requirements of the contract, plans and specifications.

**50-03 COORDINATION OF CONTRACT, PLANS AND SPECIFICATIONS.** The contract, plans, specifications, and all referenced standards cited are essential parts of the contract requirements. A requirement occurring in one is as binding as though occurring in all. They are intended to be complementary and to describe and provide for a complete work. In case of discrepancy, calculated dimensions will govern over scaled dimensions; contract technical specifications shall govern over contract general provisions, plans, cited standards for materials or testing; contract general provisions shall govern over plans, cited standards for materials or testing; plans shall govern over County standards for materials or testing.

The Contractor shall not take advantage of any apparent error or omission on the plans or specifications. In the event the Contractor discovers any apparent error or discrepancy, he shall immediately call upon the Owner for his interpretation and decision, and such decision shall be final.

**50-04 COOPERATION OF CONTRACTOR.** The Contractor will be supplied with two copies each of the plans and specifications. He shall have available on the job at all times one copy each of the plans and specifications. Additional copies of plans and specifications may be obtained by the Contractor for the cost of reproduction.

The Contractor shall give constant attention to the work to facilitate the progress thereof, and he shall cooperate with the Owner and his inspectors and with other contractors in every way possible. The Owner shall allocate the work and designate the sequence of construction in case of controversy between contractors. The Contractor shall have a competent superintendent on the job at all times who is fully authorized as his agent for the work. The superintendent shall be capable of reading and thoroughly understanding the plans and specifications and shall receive and fulfill instructions from the Owner or his authorized representative.

**50-05 COOPERATION BETWEEN CONTRACTORS.** The Owner reserves the right to contract for and perform other or additional work on or near the work covered by this contract.

When separate contracts are let within the limits of any one project, each contractor shall conduct his work so as not to interfere with or hinder the progress of completion of the work being performed by other contractors. Contractors working on the same project shall cooperate with each other as directed.

Each contractor involved shall assume all liability, financial or otherwise, in connection with his contract and shall protect and save harmless the Owner from any and all damages or claims that may arise because of inconvenience, delays, or loss experienced by him because of the presence and operations of other contractors working within the limits of the same project.

The Contractor shall arrange his work and shall place and dispose of the materials being used so as not to interfere with the operations of the other contractors within the limits of the same project. He shall join his work with that of the others in an acceptable manner and shall perform it in proper sequence to that of the others.

**50-06 CONSTRUCTION LAYOUT AND STAKES.** The Contractor and the Contractor's Engineer will establish lines, grades, and measurements necessary to the proper prosecution and control of the work contracted for under these specifications. The Contractor shall satisfy himself as to the accuracy of all measurements before constructing any permanent structure. Any question raised relative to the accuracy of construction shall not be raised unless all survey stakes remain intact. Should such stakes not be present and verified as to their origin, no claim for addition compensation for correction shall be submitted for payment and such shall be corrected by the Contractor at his expense.

**50-07 AUTOMATICALLY CONTROLLED EQUIPMENT.** Whenever batching or mixing plant equipment is required to be operated automatically under the contract and a breakdown or malfunction of the automatic controls occurs, the equipment may be operated manually or by other methods for a period of 48 hours following the breakdown or malfunction, provided this method of operations will produce results which conform to all other requirements of the contract.

**50-08 AUTHORITY AND DUTIES OF INSPECTORS.** Inspectors employed by the Owner shall be authorized to inspect all work done and all material furnished. Such inspection may extend to all or any part of the work and to the preparation, fabrication, or manufacture of the materials to be used. Inspectors are not authorized to revoke, alter, or waive any provision of the contract. Inspectors are not authorized to issue instructions contrary to the plans and specifications or to act as foreman for the Contractor.

Inspectors employed by the Owner are authorized to notify the Contractor or his representative of any failure of the work or materials to conform to the requirements of the contract, plans, or specifications and to reject such nonconforming materials in question until such issues can be referred to the Owner's Engineer for his decision.

**50-09 INSPECTION OF THE WORK.** All materials and each part or detail of the work shall be subject to inspection by the Owner. The Owner shall be allowed access to all parts of the work and shall be furnished with such information and assistance by the Contractor as is required to make a complete and detailed inspection.

If the Owner requests it, the Contractor, at any time before acceptance of the work, shall remove or uncover such portions of the finished work as may be directed. After examination, the Contractor shall restore said portions of the work to the standard required by the specifications. Should the work thus exposed or examined prove acceptable, the uncovering, or removing and the replacing of the covering or making good of the parts removed will be paid for as extra work; but should the work so exposed or examined prove unacceptable, the uncovering, or removing, and the replacing of the covering or making good of the parts removed will be at the Contractor's expense.

Any work done or materials used without supervision or inspection by an authorized representative of the Owner may be ordered removed and replaced at the Contractor's expense unless the Owner's representative failed to inspect after having been given reasonable notice in writing that the work was to be performed.

Should the contract work include relocation, adjustment, or any other modification to existing facilities, not the property of the (contract) Owner, authorized representatives of the owners of such facilities shall have the right to inspect such work. Such inspection shall in no way make any facility owner a party to the contract, and shall in no way interfere with the rights of the parties to this contract.

**50-10 REMOVAL OF UNACCEPTABLE AND UNAUTHORIZED WORK.** All work which does not conform to the requirements of the contract, plans, and specifications will be considered unacceptable, unless otherwise determined acceptable by the Owner as provided in the subsection titled CONFORMITY WITH PLANS AND SPECIFICATIONS of Section 50-02.

Unacceptable work, whether the result of poor workmanship, use of defective materials, damage through carelessness, or any other cause found to exist prior to the final acceptance of the work, shall be removed immediately and replaced in an acceptable manner in accordance with the provisions of the subsection titled CONTRACTOR'S RESPONSIBILITY FOR WORK of Section 70-13.

No work shall be done without lines and grades having been given by the Contractor's Engineer and authorized by the Owner. Work done contrary to the instructions of the Owner, work done beyond the lines shown on the plans or as given, except as herein specified, or any extra work done without authority will be considered as unauthorized and will not be paid for under the provisions of the contract. Work so done may be ordered removed or replaced at the Contractor's expense.

Upon failure on the part of the Contractor to comply as soon as possible with any order of the Owner made under the provisions of this subsection, the Owner will have authority to cause unacceptable work to be remedied or removed and replaced and unauthorized work to be removed and to deduct the costs (incurred by the Owner) from any monies due or to become due the Contractor.

**50-11 LOAD RESTRICTIONS.** The Contractor shall comply with all legal load restrictions in the hauling of materials on public roads beyond the limits of the work. A special permit will not relieve the Contractor of liability for damage that may result from the moving of material or equipment.

The operation of equipment of such weight or so loaded as to cause damage to structures or to any other type of construction will not be permitted. Hauling of materials over the base course or surface course under construction shall be limited as directed. No loads will be permitted on a concrete pavement, base, or structure before the expiration of the curing period. The Contractor shall be responsible for all damage done by his hauling equipment and shall correct such damage at this own expense.

**50-12 MAINTENANCE DURING CONSTRUCTION.** The Contractor shall maintain the work during construction and until the work is accepted. This maintenance shall constitute continuous and effective work prosecuted day by day, with adequate equipment and forces so that the work is maintained in satisfactory condition at all times.

In the case of a contract for the placing of a course upon a course or subgrade previously constructed, the Contractor shall maintain the previous course or subgrade during all construction operations.

All costs of maintenance work during construction and before the project is accepted shall be included in the unit prices bid on the various contract items, and the Contractor will not be paid an additional amount for such work.

**50-13 FAILURE TO MAINTAIN THE WORK.** Should the Contractor at any time fail to maintain the work as provided in the subsection titled MAINTENANCE DURING CONSTRUCTION of Section 50-12, the Owner shall immediately notify the Contractor of such noncompliance. Such notification shall specify a reasonable time within which the Contractor shall be required to remedy such unsatisfactory maintenance conditions. The time specified will give due consideration to the emergency that exists.

Should the Contractor fail to respond to the Owner notification, the Owner may suspend any work necessary for the Owner to correct such unsatisfactory maintenance condition, depending on the emergency that exists. Any maintenance cost incurred by the Owner shall be deducted from monies due or to become due the Contractor.

**50-14 PARTIAL ACCEPTANCE.** If at any time during the prosecution of the project the Contractor substantially completes a usable unit or portion of the work, the occupancy of which will benefit the Owner, he may request the Owner to make final inspection of that unit. If the Owner finds upon inspection that the unit has been satisfactorily completed in compliance with the contract, and certified to be in compliance by the Contractor's Engineer, he may accept it as being completed, and the Contractor may be relieved of further responsibility for that unit, subject to stated guarantees. Such partial acceptance and beneficial occupancy by the Owner shall not void or alter any provision of the contract.

**50-15 FINAL ACCEPTANCE.** Upon due notice from the Contractor of presumptive completion of the entire project, and certification of completion and compliance to the approved plans by the Contractor's Engineer, Owner will make an inspection. If all construction provided for and contemplated by the contract is found to be completed in accordance with the contract, plans, and specifications, such inspection shall constitute the final inspection. The Owner shall notify the Contractor in writing of final acceptance as of the date of the final inspection.

If, however, the inspection discloses any work, in whole or in part, as being unsatisfactory, the Owner will give the Contractor the necessary instructions for correction of same, and the Contractor shall immediately comply with and execute such instructions. Upon correction of the work, and recertification by the Contractor's Engineer, another inspection will be made which shall constitute the final inspection, provided the work has been satisfactorily completed. In such event, the Owner will make the final acceptance and notify the Contractor in writing of this acceptance as of the date of final inspection.

**50-16 CLAIMS FOR ADJUSTMENT AND DISPUTES.** If for any reason the Contractor deems that additional compensation is due him for work or materials not clearly provided for in the contract, plans, or specifications or previously authorized as extra work, he shall notify the Owner in writing of his intention to claim such additional compensation before he begins the work on which he bases the claim. If such notification is not given or the Owner is not afforded proper opportunity by the Contractor for keeping strict account of actual cost as required, then the Contractor hereby agrees to waive any claim for such additional compensation. Such notice by the Contractor and the fact that the Owner has kept account of the cost of the work shall not in any way be construed as proving or substantiating the validity of the claim. When the work on which the claim for additional compensation is based has been completed, the Contractor shall, within 10 calendar days, submit his written claim, along with certification by the Contractor's Engineer, to the Owner for consideration in accordance with local laws or ordinances.

Nothing in this subsection shall be construed as a waiver of the Contractor's right to dispute final payment based on differences in measurements or computations.

**50-17 GUARANTEE OF WORK (ADDITIONAL).** The Contractor shall guarantee all work against any defects due to faulty materials or workmanship for a period of two years from the date of final inspection and acceptance. The Owner shall give notice of observed defects with reasonable promptness. Any omission on the part of the Owner to condemn defective work at the time of construction or final inspection shall not be deemed an acceptance. The Contractor shall be required to correct defective work or material at any time before final inspection and acceptance and within two years thereafter.

**50-18 CONSTRUCTION SCHEDULE.** Prior to commencement of the work the Contractor shall prepare and submit to the Owner for review, a written schedule covering the general sequence of the work to be performed on a bi-weekly basis. The work schedule, after review and acceptance by the Owner, shall not be changed without the written consent of the Owner. The Contractor shall assume the full responsibility for performing the work in an orderly procedure under the Contract.

**50-19 NEGOTIATIONS.** It is the intent of the County to award a Contract to the lowest responsible Bidder provided the Bid has been submitted in accordance with the requirements of the Bid Documents, is judged reasonable, and does not exceed the funds available.

(a) The County shall have the authority to negotiate with the lowest bidder to reduce the scope of the Project in the event that all responsive bids exceed the Project budget.

Bids shall be made available for public inspection by appointment only after the award has been made by the Board of Supervisors. The Board of Supervisors has the sole authority to award bids and any statement by any employee of the County is not binding on the Board.

The following criteria will be considered a part of the evaluation process:

(a) Competence and responsibility of Bidder.
(b) Qualifications and experience of Bidder.
(c) Past performance of Bidder.
(d) Conformity with bidding requirements and general considerations.
(e) Record of timely completion of punch lists on past projects.

**Negotiations With Individual Contractors:** Gila County Public Works Division shall establish procedures and schedules for conducting Negotiations. Disclosure of one (1) Contractor's Price or any information derived from competing Bid Prices or any information derived from competing Bids is prohibited.

(a) Any response to a request for clarification of a bid shall be in writing.
(b) The Public Works Division shall keep a record of all negotiations.

For the purpose of conducting Negotiations with Contractors, Gila County may use any of the following methods that, in their judgment, best meets the unique requirements.

(a) Concurrent Negotiations: Negotiations may be conducted concurrently with responsible Contractors for the purpose of determining source selection and/or Contract Award.
(b) Exclusive Negotiations: A determination may be made by the Public Works Director to enter into exclusive negotiations with the responsible Contractor whose bid is determined in the selection process to be the most Advantageous to Gila County.

Exclusive Negotiations may be conducted subsequent to concurrent Negotiations or may be conducted without requiring previous concurrent Negotiations.

(a) A determination to conduct exclusive Negotiations shall not constitute a Contract Award nor shall it confer any property rights to the successful bidder.
(b) If exclusive Negotiations are conducted and an agreement is not reached, the County may enter into exclusive Negotiations with the next highest ranked Contractor without the need to repeat the formal Solicitation process.

# SECTION 60

## CONTROL OF MATERIAL

**60-01 SOURCE OF SUPPLY AND QUALITY REQUIREMENTS.** The materials used on the work shall conform to the requirements of the contract, plans, and specifications. Unless otherwise specified, such materials that are manufactured or processed shall be new (as compared to used or reprocessed).

In order to expedite the inspection and testing of materials, the Contractor's Engineer shall furnish complete statements to the Owner as to the origin, composition, and manufacture of all materials to be used in the work. Such statements shall be furnished promptly after execution of the contract but, in all cases, prior to delivery of such materials.

At the Owner's option, materials may be approved at the source of supply before delivery is started. If it is found after trial that sources of supply for previously approved materials do not produce specified products, the Contractor shall furnish materials from other sources.

It shall be the responsibility of the Contractor to provide sources of aggregates to complete the work specified in the specifications and on the plans. The Contractor shall so inform the Owner of the location of his proposed sources in sufficient time to allow for the necessary preliminary sampling and testing. The Owner shall sample the aggregate source(s) and test those samples to determine the source's suitability for use, based upon the specifications of the Contract. Any materials information provided by the Owner shall not be considered as a part of the contract, and should be used at the discretion of each prospective contractor in formulating his bids and plan of operation.

Any construction, building addition or alteration project which is financed by monies of this state or its political subdivisions shall not use endangered wood species unless an exemption is granted by the director of the Department of Administration. The director shall only grant an exemption if the use of endangered wood species is deemed necessary for historical restoration or to repair existing facilities and the use of any substitute material is not practical. Any lease-purchase agreement entered into by this state or its political subdivisions for construction shall specify that no endangered wood species may be used in the construction unless an exemption is granted by the director. As used in this subsection, an endangered wood species includes those listed in Appendix I of the Convention on International Trade in Endangered Species of Wild Flora and Fauna.

**60-02 SAMPLES, TESTS, AND CITED SPECIFICATIONS.** All materials used in the work shall be inspected, tested and certified by the Owner before incorporation in the work. Any work in which untested materials are used without approved or written permission of the Owner shall be performed at the Contractor's risk. Materials found to be unacceptable and unauthorized will not be paid for and, if directed by the Owner, shall be removed at the Contractor's expense. Unless otherwise designated, tests in accordance with the cited standard methods of ADOT, AASHTO or ASTM which are current on the date of advertisement for bids will be made by and at the expense of the Owner; samples will be taken by a qualified representative of the Owner.

All materials being used are subject to inspection, test, or rejection at any time prior to or during incorporation into the work.

**60-03 CERTIFICATION OF COMPLIANCE.** The Owner' may permit the use, prior to sampling and testing, of certain materials or assemblies when accompanied by manufacturer's certificates of compliance stating that such materials or assemblies fully comply with the requirements of the contract.

The certificate shall be signed by the manufacturer. Each lot of such materials or assemblies delivered to the work must be accompanied by a certificate of compliance in which the lot is clearly identified.

Materials or assemblies used on the basis of certificates of compliance may be sampled and tested at any time and if found not to be in conformity with contract requirements will be subject to rejection whether in place or not.

The form and distribution of certificates of compliance shall be as approved by the Owner.

When a material or assembly is specified by "brand name or equal" and the Contractor elects to furnish the specified "brand name," the Contractor shall be required to furnish the manufacturer's certificate of compliance for each lot of such material or assembly delivered to the work. Such certificate of compliance shall clearly identify each lot delivered and shall certify as to:

(a) Conformance to the specified performance, testing, quality or dimensional requirements; and,
(b) Suitability of the material or assembly for the use intended in the contract work.

Should the Contractor propose to furnish an "or equal" material or assembly, he shall furnish the manufacturer's certificates of compliance as hereinbefore described for the specified brand name material or assembly. However, the Owner shall be the sole judge as to whether the proposed "or equal" is suitable for use in the work.

The Owner reserves the right to refuse permission for use of materials or assemblies on the basis of certificates of compliance.

**60-04 PLANT INSPECTION.** The Owner or his authorized representative may inspect, at its source, any specified material or assembly to be used in the work. Manufacturing plants may be inspected from time to time for the purpose of determining compliance with specified manufacturing methods or materials to be used in the work and to obtain samples required for his acceptance of the material or assembly.

Should the Owner conduct plant inspections, the following conditions shall exist:

(a) The Owner shall have the cooperation and assistance of the Contractor and the producer with whom he has contracted for materials.
(b) The Owner shall have full entry at all reasonable times to such parts of the plant that concern the manufacture or production of the materials being furnished.
(c) If required by the Owner, the Contractor shall arrange for adequate office or working space that may be reasonably needed for conducting plant inspections. Office or working space should be conveniently located with respect to the plant.

It is understood and agreed that the Owner shall have the right to retest any material which has been tested and approved at the source of supply after it has been delivered to the site. The Owner shall have the right to reject only material which, when retested, does not meet the requirements of the contract, plans, or specifications.

**60-05 OWNER'S FIELD OFFICE AND LABORATORY.** The Owner's field office and laboratory shall be the responsibility of the Contractor or his authorized representative as determined by need by the Owner.

**60-06 STORAGE OF MATERIALS.** Materials shall be so stored as to assure the preservation of their quality and fitness for the work. Stored materials, even though approved before storage, may again be inspected prior to their use in the work. Stored materials shall be located so as to facilitate their prompt inspection. The Contractor shall coordinate the storage of all materials with the Owner. Private property shall not be used for storage purposes without written permission of the owner or lessee of such property. The Contractor shall make all arrangements and bear all expenses for the storage of materials on private property. Upon request, the Contractor shall furnish the Owner a copy of the property owner's permission.

All storage sites on private property shall be restored to their original condition by the Contractor at his entire expense, except as otherwise agreed to (in writing) by the owner or lessee of the property.

**60-07 UNACCEPTABLE MATERIALS.** Any material or assembly that does not conform to the requirements of the contract, plans or specifications shall be considered unacceptable and shall be rejected. The Contractor shall remove any rejected material or assembly from the site of the work, unless otherwise instructed by the Owner.

No rejected material or assembly, the defects of which have been corrected by the Contractor, shall be returned to the site of the work until such time as the Owner has approved its use in the work.

**60-08 OWNER-FURNISHED MATERIALS.** The Contractor shall furnish all materials required to complete the work, except those specified herein (if any) to be furnished by the Owner. Owner-furnished materials shall be made available to the Contractor at the location specified herein.

All costs of handling, transportation from the specified location to the site of work, storage, and installing owner-furnished materials shall be included in the unit price bid for the contract item in which such owner-furnished material is used.

After any owner-furnished material has been delivered to the location specified, the Contractor shall be responsible for any demurrage, damage, loss, or other deficiencies that may occur during the Contractor's handling, storage, or use of such owner-furnished material. The Owner will deduct from any monies due or to become due the Contractor any cost incurred by the Owner in making good such loss due to the Contractor's handling, storage, or use of owner-furnished materials.

# SECTION 70

## LEGAL RELATIONS AND RESPONSIBILITY TO PUBLIC

**70-01 LAWS TO BE OBSERVED.** The Contractor shall keep fully informed of all Federal and State laws, all local laws, ordinances, and regulations and all orders and decrees of bodies or tribunals having any jurisdiction or authority, which in any manner affect those engaged or employed on the work, or which in any way affect the conduct of the work. He shall at all times observe and comply with all such laws, ordinances, regulations, orders, and decrees; and shall protect and indemnify the Owner and all his officers, agents, or servants against any claim or liability arising from or based on the violation of any such law, ordinance, regulation, order, or decree, whether by himself or his employees.

Laws and Ordinances: This agreement shall be enforced under the laws of the State of Arizona and Gila County. The Contractor shall maintain in current status all Federal, State and Local licenses and permits required for the operation of the business conducted by the Contractor. The Contractor shall comply with the applicable provisions of the Americans with Disabilities Act (Public Law 101-336, 42 U.S.C. 12101-12213) and applicable federal regulations under the Act.

**70-02 PERMITS, LICENSES, AND TAXES.** The Contractor shall procure all permits and licenses, pay all charges, fees, and taxes, and give all notices necessary and incidental to the due and lawful prosecution of the work. All costs for any permits, licenses, fees, taxes, or other charges shall be included in the contract price bid.

**70-03 PATENTED DEVICES, MATERIALS, AND PROCESSES.** If the Contractor is required or desires to use any design, device, material, or process covered by letters of patent or copyright, he shall provide for such use by suitable legal agreement with the patentee or owner. The Contractor and the surety shall indemnify and save harmless the Owner, any third party, or political subdivision from any and all claims for infringement by reason of the use of any patented design, device, material or process, or any trademark or copyright, and shall indemnify the Owner for any costs, expenses, and damages which it may be obliged to pay by reason of an infringement, at any time during the prosecution or after the completion of the work.

**70-04 RESTORATION OF SURFACES DISTURBED BY OTHERS.** The Owner reserves the right to authorize the construction, reconstruction, or maintenance of any public or private utility service, or a utility service of another government agency at any time during the progress of the work. To the extent that such construction, reconstruction, or maintenance has been coordinated with the Owner, such authorized work (by others) is indicated as follows:

A. Preparatory work on the subgrade by the Owner.

Except as provided above, the Contractor shall not permit any individual, firm, or corporation to excavate or otherwise disturb such utility services or facilities located within the limits of the work without the written permission of the Owner's Engineer.

Should the owner of public or private utility service, or a utility service of another government agency be authorized to construct, reconstruct, or maintain such utility service or facility during the progress of the work, the Contractor shall cooperate with such owners by arranging and performing the work in this contract so as to facilitate such construction, reconstruction or maintenance by others whether or not such work by others is listed above. When ordered as extra work by the Owner's Engineer, the Contractor shall make all necessary repairs to the work which are due to such authorized work by others, unless otherwise provided for in the contract, plans or specifications. It is understood and agreed that the Contractor shall not be entitled to make any claim for damages due to such authorized work by others or for any delay to the work resulting from such authorized work.

**70-05 SANITARY, HEALTH, AND SAFETY PROVISIONS.** The Contractor shall provide and maintain in a neat, sanitary condition such accommodations for the use of his employees as required to comply with the requirements of the State and local boards of health, or of other bodies or tribunals having jurisdiction. Contractor is responsible for supplying toilet and hand washing facilities at work site.

Attention is directed to Federal, State and local laws, rules and regulations concerning construction safety and health standards. The Contractor shall not require any worker to work in surroundings or under conditions which are unsanitary, hazardous, or dangerous to his health or safety as determined under the Arizona Occupational Safety and Health Standards for Construction, adopted by the Industrial Commission of Arizona pursuant to the Authority in A.R.S. §23-410.

Contractor Safety Tailgate Meetings: Contractor shall conduct tailgate safety meetings regularly to ensure that safety on the job is given priority. Gila County will be represented at each of those informal meetings. Notification shall be given to the County QA/QC Safety Compliance Officer at (928) 402-8506 at least twenty-four (24) hours in advance of the next meeting. Each employee of the Contractor and Sub-Contractor shall read the County Safety & Loss Control Procedures book and sign an acknowledgement.

Accident/Injury Procedure: Contractor shall contact the Owner and the Gila County Risk Management Division within twenty-four (24) hours of the occurrence of an accident or injury arising out of the Contractor’s work under this contract.

Unsafe Acts: Contractor employees are encouraged to abate or remedy any unsafe act or condition which may arise in the course of Contractor’s work under this contract.

Safety Audits: The County reserves the right to conduct safety audits at the job site and stop unsafe acts at any time. In addition, the County shall be notified should any OSHA inspection occur at a County job site.

**70-06 PUBLIC CONVENIENCE AND SAFETY.** The Contractor shall control his operations and those of his subcontractors and all suppliers, to assure the least inconvenience to the traveling public. Under all circumstances, safety shall be the most important consideration.

The Contractor shall maintain the free and unobstructed movement of aircraft and/or vehicular traffic with respect to his own operations and those of his subcontractor and all suppliers in accordance with the subsection titled MAINTENANCE OF TRAFFIC of Section 40-05 hereinbefore specified.

**70-07 BARRICADES, WARNING SIGNS AND HAZARD MARKINGS.** The Contractor shall furnish, erect and maintain all barricades, warning signs, and markings for hazards necessary to protect the public and the work. When used during periods of darkness, such barricades, warning signs and hazard markings shall be suitably illuminated.

For vehicular and pedestrian traffic, the Contractor shall furnish, erect, and maintain barricades, warning signs, lights and other traffic control devices in reasonable conformity with the Manual of Uniform Traffic Control Devices for Streets and Highways (MUTCD Part VI), published by the United States Government Printing Office.

The Contractor shall furnish and erect all barricades, warning signs and markings for hazards prior to commencing work which required such erection and shall maintain the barricades, warning signs, and markings for hazards until their dismantling is directed by the Owner's Engineer.

**70-08 PROTECTION AND RESTORATION OF PROPERTY AND LANDSCAPE.** The Contractor shall be responsible for the preservation of all public and private property, and shall protect carefully from disturbance or damage all land monuments and property marks until the Contractor's Engineer and the Owner's Engineer has witnessed or otherwise referenced their location and shall not move them until directed.

The Contractor shall be responsible for all damage or injury to property of any character, during the prosecution of the work, resulting from any act, omission, neglect, or misconduct in his manner or method of executing the work, or at any time due to defective work or materials, and said responsibility will not be released until the project shall have been completed and accepted.

When or where any direct or indirect damage or injury is done to public or private property by or on account of any act, omission, neglect, or misconduct in the execution of the work, or in consequence of the non-execution thereof by the Contractor, he shall restore, at his own expense, such property to a condition similar or equal to that existing before such damage or injury was done, by repairing, rebuilding, or otherwise restoring as may be directed, or he shall make good such damage or injury in an acceptable manner.

**70-09 RESPONSIBILITY FOR DAMAGE CLAIMS.** To the fullest extent permitted by law, Contractor shall defend, indemnify and hold harmless Gila County, and the Pinal Creek Group and their respective agents, representatives, officers, directors, officials, and employees from and against any and all demands, proceedings, suits, actions, claims, damages, or losses relating to, arising out of, resulting from or alleged to have resulted from the performance of the Work. Contractor's duty to defend, indemnify and hold harmless the indemnitee and their respective agents, representatives, officers, directors, officials and employees shall arise in connection with any and all demands, proceedings, suits, actions, claims, workers compensation claims, unemployment claims, damages, losses or expenses (including but not limited to attorneys fees, court costs and the cost of appellate proceedings) that are attributable to personal or bodily injury, sickness, disease, death, or injury to, impairment or destruction of property including the loss of use resulting thereon, caused by any act or omission of the Contractor, a subcontractor, anyone directly or indirectly employed by them or for whose acts they may be liable. The amount and type of insurance coverage requirements set forth in the Contract shall in no way be construed as limiting the scope of this indemnity.

**70-10 CONTRACTOR'S INSURANCE.** Prior to the execution of the contract, the Contractor shall file with the Owner's Engineer a certificate or certificates of insurance executed by an insurance company doing business in the State of Arizona and acceptable to the Owner's Engineer. The certificate of insurance shall state that, with respect to the contract awarded the Contractor; the Contractor carries insurance in accordance with the requirements of this subsection.

**On all policies Gila County shall be named as an additional insured.**

All insurance policies or certificates shall include an endorsement providing for thirty (30) days prior written notice to the Owner's Engineer of any cancellation or reduction of coverage. The Contractor shall cease operations on the occurrence of any such cancellation or reduction and shall not resume operations until the required insurance is in force and new certificates of insurance have been filed with the Owner's Engineer. The insurance policy or policies provided by the Contractor may contain deductibles not to exceed $500 for any one accident or occurrence excluding bodily injury.

In addition to statutory Worker's Compensation insurance, the Contractor, with respect to all operations performed by himself or his subcontractors, shall have in force regular public liability insurance in not less than the following amount: **$2,000,000 Combined Single Limit of Liability per Occurrence.**

Such insurance shall include, but not be limited to, coverage for underground damage to facilities because of drilling and excavating with mechanical equipment, and for collapse of or structural injury to structures or utilities because of blasting or explosion, excavation, tunneling, pile driving, cofferdam work or demolition.

With respect to the operation of all motor vehicles, including those hired or borrowed, used in connection with the contract, the Contractor shall have in force automobile liability insurance in not less than the following amount: **$2,000,000 Combined Single Limit of Liability per Occurrence.**

**70-11 THIRD PARTY BENEFICIARY CLAUSE.** It is specifically agreed between the parties executing the contract that it is not intended by any of the provisions of any part of the contract to create to the public or any member thereof a third party beneficiary or to authorize anyone not a party to the contract to maintain a suit for personal injuries or property damage pursuant to the terms or provisions of the contract.

**70-12 OPENING SECTIONS OF THE WORK TO TRAFFIC.** Should it be necessary for the Contractor to complete portions of the contract work for the beneficial occupancy of the Owner prior to completion of the entire contract, such "phasing" of the work shall be specified herein and indicated on the plans. When so specified, the Contractor shall complete such portions of the work on or before the date specified or as otherwise specified. The Contractor shall make his own estimate of the difficulties involved in arranging his work to permit such beneficial occupancy by the Owner as described below:

Upon completion of any portion of the work listed above, with certification of the work by the Contractor's Engineer, such portion shall be accepted by the Owner in accordance with the subsection titled PARTIAL ACCEPTANCE of Section 50-14.

No portion of the work may be opened by the Contractor for public use until ordered by the Owner's Engineer in writing. Should it become necessary to open a portion of the work to public traffic on a temporary or intermittent basis, such openings shall be made when, in the opinion of the Owner's Engineer, such portion of the work is in an acceptable condition to support the intended traffic. Temporary or intermittent openings are considered to be inherent in the work and shall not constitute either acceptance of the portion of the work so opened or a waiver of any provision of the contract. Any damage to the portion of the work so opened that is not attributable to traffic which is permitted by the Owner shall be repaired by the Contractor at his expense.

The Contractor shall make his own estimate of the inherent difficulties involved in completing the work under the conditions herein described and shall not claim any added compensation by reason of delay or increased cost due to opening a portion of the contract work.

**70-13 CONTRACTOR'S RESPONSIBILITY FOR WORK.** Until the Owner's Engineer's final written acceptance of the entire completed work, excepting only those portions of the work accepted in accordance with the subsection titled PARTIAL ACCEPTANCE of Section 50-14, the Contractor shall have the charge and care thereof and shall take every precaution against injury or damage to any part due to the action of the elements or from any other cause, whether arising from the execution or from the non-execution of the work. The Contractor shall rebuild, repair, restore, and make good all injuries or damages to any portion of the work occasioned by any of the above causes before final acceptance and shall bear the expense thereof except damage to the

work due to unforeseeable causes beyond the control of and without the fault or negligence of the Contractor, including but not restricted to acts of God such as earthquake, tidal wave, tornado, hurricane or other cataclysmic phenomenon of nature, or acts of the public enemy or of governmental authorities.

If the work is suspended for any cause whatever, the Contractor shall be responsible for the work and shall take such precautions necessary to prevent damage to the work. The Contractor shall provide for normal drainage and shall erect necessary temporary structures, signs, or other facilities at his expense. During such period of suspension of work, the Contractor shall properly and continuously maintain in an acceptable growing condition all living material in newly established plantings, seedings, and soddings furnished under his contract, and shall take adequate precautions to protect new tree growth and other important vegetative growth against injury.

**70-14 CONTRACTOR'S RESPONSIBILITY FOR UTILITY SERVICE AND FACILITIES OF OTHERS.** As provided in the subsection titled RESTORATION OF SURFACES DISTURBED BY OTHERS of Section 70-04, the Contractor shall cooperate with the owner of any public or private utility service, or a utility service of another government agency that may be authorized by the Owner to construct, reconstruct or maintain such utility services or facilities during the progress of the work. In addition, the Contractor shall control his operations to prevent the unscheduled interruption of such utility services and facilities and shall notify Blue Stake in accordance with applicable State laws or regulations prior to commencing any work.

It is understood and agreed that the Owner does not guarantee the accuracy or the completeness of the location information relating to existing utility services, facilities, or structures that may be shown on the plans or encountered in the work. Any inaccuracy or omission in such information shall not relieve the Contractor of his responsibility to protect such existing features from damage or unscheduled interruption of service. It is further understood and agreed that the Contractor shall, upon execution of the contract, notify the owners of all utility services or other facilities of his plans of operations. Such notification shall be in writing and addressed to Blue Stake and the respective utility as provided hereinbefore in this subsection and the subsection titled RESTORATION OF SURFACES DISTURBED BY OTHERS of Section 70-04. A copy of each notification shall be given to the Owner's Engineer.

In addition to the general written notification hereinbefore provided, it shall be the responsibility of the Contractor to keep Blue Stake and such individual owners advised of changes in his plan of operations that would affect such owners.

Prior to commencing the work in the general vicinity of an existing utility service or facility, the Contractor shall again notify each such owner of his plan of operation. If, in the Contractor's opinion, the Owner's assistance is needed to locate the utility service or facility or the presence of a representative of the Owner is desirable to observe the work, such advice should be included in the notification. Such notification shall be given by the most expeditious means to reach the utility owner's PERSON TO CONTACT no later than two normal business days prior to the Contractor's commencement of operations in such general vicinity.

The Contractor shall furnish a written summary of the notification to the Owner's Engineer. The Contractor's failure to give the two day's notice hereinabove provided shall be cause for the Owner's Engineer to suspend the Contractor's operations in the general vicinity of a utility service or facility.

Where the outside limits of an underground utility service have been located and staked on the ground, the Contractor shall be required to use excavation methods acceptable to the Owner's Engineer within 3 feet of such outside limits at such points as may be required to insure protection from damage due to the Contractor's operations.

Should the Contractor damage or interrupt the operation of a utility service or facility by accident or otherwise, he shall immediately notify the proper authority and the Owner's Engineer and shall take all reasonable measures to prevent further damage or interruption of service. The Contractor, in such events, shall cooperate with the utility service or facility owner and the Owner's Engineer continuously until such damage has been repaired and service restored to the satisfaction of the utility or facility owner.

The Contractor shall bear all costs of damage and restoration of service to any utility service or facility due to his operations whether or not due to negligence or accident. The contract owner reserves the right to deduct such costs from any monies due or which may become due the Contractor, or his surety.

**70-15 FURNISHING RIGHTS-OF-WAY.** The Owner will be responsible for furnishing all rights-of-way, permanent easements and temporary construction easements upon which the work is to be constructed in advance of the Contractor's operations.

**70-16 PERSONAL LIABILITY OF PUBLIC OFFICIALS.** In carrying out any of the contractor provisions or in exercising any power or authority granted to him by this contract, there shall be no liability upon the Owner's Engineer, his authorized representatives, or any official of the Owner either personally or as an official of the Owner. It is understood that in such matters they act solely as agents and representatives of the Owner.

**70-17 NO WAIVER OF LEGAL RIGHTS.** Upon completion of the work, the Owner will expeditiously make final inspection and notify the Contractor of final acceptance. Such final acceptance, however, shall not preclude or stop the Owner from correcting any measurement, estimate, or certificate made before or after completion of the work, nor shall the Owner be precluded or stopped from recovering from the Contractor or his surety, or both, such overpayment as may be sustained, or by failure on the part of the Contractor to fulfill his obligations under the contract. A waiver on the part of the Owner of any breach of any part of the contract shall not be held to be a waiver of any other or subsequent breach.

The Contractor, without prejudice to the terms of the contract, shall be liable to the Owner for latent defects, fraud, or such gross mistakes as may amount to fraud, or as regards the Owner's rights under any warranty or guaranty.

**70-18 ENVIRONMENTAL PROTECTION.** The Contractor shall comply with all Federal, State, and local laws and regulations controlling pollution of the environment. He shall take necessary precautions to prevent pollution of streams, lakes, ponds and reservoirs with fuels, oils, bitumen's, chemicals, or other harmful materials and to prevent pollution of the atmosphere from particulate and gaseous matter.

# SECTION 80

## PROSECUTION AND PROGRESS

**80-01 SUBLETTING OF CONTRACT.** The Contractor shall not sublet, sell, transfer, assign or otherwise dispose of the contract or contracts or any portion thereof or of his right, title or interest therein without written consent of the Owner's Engineer. In case such consent is given, the Contractor will be permitted to sublet a portion thereof, but shall perform with his own organization work amounting to not less than 50 percent of the total contract amount, except that any items designated in the contract as "Specialty Items" may be performed by subcontract and the cost of any such specialty items so performed by subcontract may be deducted from the total cost before computing the amount of work required to be performed by the Contractor with his own organization. No subcontracts or transfer of contract shall release the Contractor of his liability under the contract and bond.

"His own organization" shall be construed to include only workmen employed and paid directly by the prime contractor and equipment owned or rented by him, with or without operators.

"Specialty Items" shall be construed to be limited to work that requires highly specialized knowledge, craftsmanship or equipment not ordinarily available in contracting organizations qualified to bid on the contract as a whole and in general are to be limited to minor components of the overall contract.

The contract amount upon which the 50 percent requirement is computed includes the cost of materials and manufactured products which are to be purchased or produced by the Contractor under the contract provisions.

Any items that have been selected as "Specialty Items" for the contract will be listed as such in the special provisions, bidding schedule, or elsewhere in the contract documents.

The Owner will not recognize any subcontractor on the work. The Contractor shall at all times when work is in progress be represented either in person, by a qualified superintendent, or by other designated, qualified representative who is duly authorized to receive and execute the orders of the Owner's Engineer.

Should the Contractor elect to assign his contract, said assignment shall be concurred in by the surety, shall be presented for the consideration and approval of the Owner, and shall be consummated only on the written approval of the Owner. In case of approval, the Contractor shall file copies of all subcontracts with the Owner's Engineer.

**80-02 NOTICE TO PROCEED.** The notice to proceed shall state the date on which it is expected the Contractor will begin the construction and from which date contract time will be charged. The Contractor shall begin the work to be performed under the contract within ten (10) calendar days of the date set by the Owner's Engineer in the written notice to proceed, but in any event, the Contractor shall notify the Owner's Engineer at least two (2) work days in advance of the time actual construction operations will begin.

**80-03 PROSECUTION AND PROGRESS.** Unless otherwise specified, the Contractor shall submit his progress schedule for the Owner's Engineer's approval within 10 days after the effective date of the notice to proceed. The Contractor's progress schedule, when approved by the Owner's Engineer, may be used to establish major construction operations and to check on the progress of the work. The Contractor shall provide sufficient materials, equipment, and labor to guarantee the completion of the project in accordance with the plans and specifications within the time set forth in the proposal.

If the Contractor falls significantly behind the submitted schedule, the Contractor shall, upon the Owner's Engineer's request, submit a revised schedule for completion of the work within the contract time and modify his operations to provide such additional materials, equipment, and labor necessary to meet the revised schedule. Should the prosecution of the work be discontinued for any reason, the Contractor shall notify the Owner's Engineer at least twenty-four (24) hours in advance of resuming operations.

The Contractor shall not commence any actual construction prior to the date on which the notice to proceed is issued by the Owner.

**80-04 CONSTRUCTION LIMITS.** Construction limits shall be defined as that area of the public right-of-way, easement or area shown on the construction plans to be disturbed as a part of this contract for this project.

**80-05 CHARACTER OF WORKERS, METHODS AND EQUIPMENT.** The Contractor shall, at all times, employ sufficient labor and equipment for prosecuting the work to full completion in the manner and time required by the contract, plans and specifications.

All workers shall have sufficient skill and experience to perform properly the work assigned to them. Workers engaged in special work or skilled work shall have sufficient experience in such work and in the operation of the equipment required to perform the work satisfactorily.

Any person employed by the Contractor or by any subcontractor who, in the opinion of the Owner's Engineer, does not perform his work in a proper and skillful manner or is intemperate or disorderly shall, at the written request of the Owner's Engineer, be removed forthwith by the Contractor or subcontractor employing such person, and shall not be employed again in any portion of the work without the approval of the Owner's Engineer.

Should the Contractor fail to remove such person or persons or fail to furnish suitable and sufficient personnel for the proper prosecution of the work, the Owner's Engineer may suspend the work by written notice until compliance with such orders.

All equipment which is proposed to be used on the work shall be of sufficient size and in such mechanical condition as to meet requirements of the work and to produce a satisfactory quality of work. Equipment used on any portion of the work shall be such that no injury to previously completed work, adjacent property, or existing facilities will result from its use.

When the methods and equipment to be used by the Contractor in accomplishing the work are not prescribed in the contract, the Contractor is free to use any methods or equipment that will accomplish the work in conformity with the requirements of the contract, plans and specifications. When the contract specifies the use of certain methods and equipment, such methods and equipment shall be used unless others are authorized by the Owner's Engineer. If the Contractor desires to use a method or type of equipment other than specified in the contract, he may request authority from the Owner's Engineer to do so. The request shall be in writing and shall include a full description of the methods and equipment proposed and of the reasons for desiring to make the change. If approval is given, it will be on the condition that the Contractor will be fully responsible for producing work in conformity with contract requirements. If, after trial use of the substituted methods or equipment, the Owner's Engineer determines that the work produced does not meet contract requirements, the Contractor shall discontinue the use of the substitute method or equipment and shall complete the remaining work with the specified methods and equipment. The Contractor shall remove any deficient work and replace it with work of specified quality, or take such other corrective action as the Owner's Engineer may direct. No change will be made in basis of payment for the contract items involved nor in contract time as a result of authorizing a change in methods or equipment under this subsection.

**80-06 TEMPORARY SUSPENSION OF THE WORK.** The Owner's Engineer shall have the authority to suspend the work wholly, or in part, for such period or periods as he may deem necessary, due to unsuitable weather, or such other conditions as are considered unfavorable for the prosecution of the work, or for such time as is necessary due to the failure on the part of the Contractor to carry out orders given or perform any or all provisions of the contract.

In the event that the Contractor is ordered by the Owner's Engineer, in writing, to suspend work for some unforeseen cause not otherwise provided for in the contract and over which the Contractor has no control, the Contractor may be reimbursed for actual money expended on the work during the period of shutdown. No allowance will be made for anticipated profits. The period of shutdown shall be computed from the effective date of the Owner's Engineer's order to suspend work to the effective date of the Owner's Engineer's order to resume the work. Claims for such compensation shall be filed with the Owner's Engineer within the time period stated in the Owner's Engineer's order to resume work. The Contractor shall submit with his claim information substantiating the amount shown on the claim. The Owner's Engineer will forward the Contractor's claim to the Owner for consideration in accordance with local laws or ordinances. No provision of this article shall be construed as entitling the Contractor to compensation for delays due to inclement weather, for suspensions made at the request of the Contractor, or for any other delay provided for in the contract, plans or specifications.

If it should become necessary to suspend work for an indefinite period, the Contractor shall store all materials in such manner that they will not become an obstruction nor become damaged in any way. He shall take every precaution to prevent damage or deterioration of the work performed and provide for normal drainage of the work. The Contractor shall erect temporary structures where necessary to provide for the continuous flow of traffic.

**80-07 DETERMINATION AND EXTENSION OF CONTRACT TIME.** The number of calendar or working days allowed for completion of the work shall be stated in the proposal and contract and shall be known as the CONTRACT TIME.

Should the contract time require extension for reasons beyond the Contractor's control, it shall be adjusted as follows:

(a) CONTRACT TIME (10-13) based on WORKING DAYS (10-41) shall be calculated weekly by the Owner's Engineer. The Owner's Engineer will furnish the Contractor a copy of his weekly statement of the number of working days charged against the contract time during the week and the number of working days currently specified for completion of the contract (the original contract time plus the number of working days, if any, that have been included in approved CHANGE ORDERS (10-10) or SUPPLEMENTAL AGREEMENTS (10-38) covering EXTRA WORK (40-04).

The Owner's Engineer shall base his weekly statement of contract time charged on the following considerations:

(1) No time shall be charged for days on which the Contractor is unable to proceed with the principal item of work under construction at the time for at least 6 hours with the normal work force employed on such principal item. Should the normal work force be on a double-shift, 12 hours shall be used. Should the normal work force be on a triple-shift, 18 hours shall apply. Conditions beyond the Contractor's control such as strikes, lockouts, unusual delays in transportation, temporary suspension of the principal items of work under construction or temporary suspension of the entire work which have been ordered by the Owner's Engineer for reasons not the fault of the Contractor, shall not be charged against the contract time.

(2) The Owner's Engineer will not make charges against the contract time prior to the effective date of the notice to proceed.

(3) The Owner's Engineer will begin charges against the contract time on the first working day after the effective date of the notice to proceed.

(4) The Owner's Engineer will not make charges against the contract time after the date of final acceptance as defined in the subsection titled FINAL ACCEPTANCE of Section 50-15.

(5) The Contractor will be allowed one week in which to file a written protest setting forth his objections to the Owner's Engineer's weekly statement. If no objection is filed within such specified time, the weekly statement shall be considered as acceptable to the Contractor.

The contract time (stated in the proposal) is based on the originally estimated quantities as described in the subsection titled INTERPRETATION OF ESTIMATED PROPOSAL QUANTITIES of Section 20-05.

Should the satisfactory completion of the contract require performance of work in greater quantities than those estimated in the proposal, the contract time shall be increased in the same proportion as the cost of the actually completed quantities bears to the cost of the originally estimated quantities in the proposal. Such increase in contract time shall not consider either the cost of work or the extension of contract time that has been covered by change order or supplemental agreement and shall be made at the time of final payment.

(b) CONTRACT TIME (10-13) based on CALENDAR DAYS (10-09) shall consist of the number of calendar days stated in the contract counting from the effective date of the notice to proceed and including all Saturdays, Sundays, holidays, and non-work days. All calendar days elapsing between the effective dates of the Owner's Engineer's orders to suspend and resume all work, due to causes not the fault of the Contractor, shall be excluded.

At the time of final payment, the contract time shall be increased in the same proportion as the final cost bears to the estimated cost in the proposal. Such increase in the contract time shall not consider either the cost of work or the extension of contract time that has been covered by a change order or supplemental agreement. Charges against the contract time will cease as of the date of final acceptance.

(c) When the contract time is a specified completion date, it shall be the date on which all contract work shall be substantially completed.

If the Contractor finds it impossible for reasons beyond his control to complete the work within the contract time as specified, or as extended in accordance with the provisions of this subsection, he may, at any time prior to the expiration of the contract time as extended, make a written request to the Owner's Engineer for an extension of time setting forth the reasons which he believes will justify the granting of his request. The Contractor's plea that insufficient time was specified is not a valid reason for extension of time. If the Owner's Engineer finds that the work was delayed because of conditions beyond the control and without the fault of the Contractor, he may extend the time for completion in such amount as the conditions justify. The extended time for completion shall then be in full force and effect, the same as though it were the original time for completion.

**80-08 FAILURE TO COMPLETE ON TIME.** For each calendar day or working day, as specified in the contract, that any work remains uncompleted after the contract time (including all extensions and adjustments as provided in the subsection titled DETERMINATION AND EXTENSION OF CONTRACT TIME of Section 80-07) the sum specified in the contract and proposal as liquidated damages will be deducted from any money due or to become due the Contractor or his surety. Such deducted sums shall not be deducted as a penalty but shall be considered as liquidation of a reasonable portion of damages that will be incurred by the Owner should the Contractor fail to complete the work in the time provided in his contract.

Permitting the Contractor to continue and finish the work or any part of it after the time fixed for its completion, or after the date to which the time for completion may have been extended, will in no way operate as a waiver on the part of the Owner of any of its rights under the contract.

**80-09 DEFAULT AND TERMINATION OF CONTRACT.** The Contractor shall be considered in default of his contract and such default will be considered as cause for the Owner to terminate the contract for any of the following reasons if the Contractor:

(a) Fails to begin the work under the contract within the time specified in the "Notice to Proceed (80-02)"; or
(b) Fails to perform the work or fails to provide sufficient workers, equipment or materials to assure completion of work in accordance with the terms of the contract; or
(c) Performs the work unsuitably or neglects or refuses to remove materials or to perform anew such work as may be rejected as unacceptable and unsuitable; or
(d) Discontinues the prosecution of the work; or
(e) Fails to resume work which has been discontinued within a reasonable time after notice to do so; or
(f) Becomes insolvent or is declared bankrupt, or commits any act of bankruptcy or insolvency; or
(g) Allows any final judgment to stand against him unsatisfied for a period of 10 days; or
(h) Makes an assignment for the benefit of creditors; or
(i) For any other cause whatsoever, fails to carry on the work in an acceptable manner.

Should the Owner's Engineer consider the Contractor in default of the contract for any reason hereinbefore, he shall immediately give written notice to the Contractor and the Contractor's surety as to the reasons for considering the Contractor in default and the Owner's intentions to terminate the contract.

If the Contractor or surety, within a period of 10 calendar days after such notice, does not proceed in accordance therewith, then the Owner will, upon written notification from the Owner's Engineer of the facts of such delay, neglect, or default and the Contractor's failure to comply with such notice, have full power and authority without violating the contract, to take the prosecution of the work out of the hands of the Contractor. The Owner may appropriate or use any or all materials and equipment that have been mobilized for use in the work and are acceptable and may enter into an agreement for the completion of said contract according to the terms and provisions thereof, or use such other methods as in the opinion of the Owner's Engineer will be required for the completion of said contract in an acceptable manner.

All costs and charges incurred by the Owner, together with the cost of completing the work under contract, will be deducted from any monies due or which may become due the Contractor. If such expense exceeds the sum which would have been payable under the contract, then the Contractor and the surety shall be liable and shall pay to the Owner the amount of such excess.

**80-10 TERMINATION FOR NATIONAL EMERGENCIES.** The Owner shall terminate the contract or portion thereof by written notice when the Contractor is prevented from proceeding with the construction contract as a direct result of an Executive Order of the President with respect to the prosecution of war or in the interest of national defense.

When the contract, or any portion thereof, is terminated before completion of all items of work in the contract, payment will be made for the actual number of units or items of work completed at the contract price or as mutually agreed for items of work partially completed or not started. No claims or loss of anticipated profits shall be considered.

Reimbursement for organization of the work, and other overhead expenses, (when not otherwise included in the contract) and moving equipment and materials to and from the job will be considered, the intent being that an equitable settlement will be made with the Contractor.

Acceptable materials, obtained or ordered by the Contractor for the work and that are not incorporated in the work shall, at the option of the Contractor, be purchased from the Contractor at actual cost as shown by receipted bills and actual cost records at such points of delivery as may be designated by the Owner's Engineer.

Termination of the contract or a portion thereof shall neither relieve the Contractor of his responsibilities for the completed work nor shall it relieve his surety of its obligation for and concerning any just claim arising out of the work performed.

# SECTION 90

## MEASUREMENT AND PAYMENT

**90-01 MEASUREMENT OF QUANTITIES.** All work completed under the contract will be measured by the Contractor's Engineer, certified and furnished to the Owner's Engineer and verified by the Owner or his authorized representatives, using United States Customary Units of Measurement.

The method of measurement and computations to be used in determination of quantities of material furnished and of work performed under the contract will be those methods generally recognized as conforming to good engineering practice.

Unless otherwise specified, longitudinal measurements for area computations will be made horizontally, and no deductions will be made for individual fixtures (or leave-outs) having an area of 9 square feet or less. Unless otherwise specified, transverse measurements for area computations will be the neat dimensions shown on the plans or ordered in writing by the Owner's Engineer.

Structures will be measured according to neat lines shown on the plans or as altered to fit field conditions.

Unless otherwise specified, all contract items which are measured by the linear foot such as pipe culverts, and similar items shall be measured parallel to the base or foundation upon which such items are placed.

In computing volumes of excavation the average end area method or other methods acceptable to the Owner's Engineer, will be used.

Areas of materials paid for by area shall be measured using the centerline length of the facility multiplied by the lesser of the average actual or plan dimensions perpendicular to centerline. Actual width shall be measured at random locations along the length of the project, with an average of two measurements per station. Volumes of materials in place shall be determined by multiplying the area by the lesser of the plan or actual average thickness of the material. Materials in a structural section such as aggregate base shall be not less than the specified thickness.

The thickness of plates and galvanized sheet used in the manufacture of corrugated metal pipe, metal plate pipe culverts and arches, and metal cribbing will be specified and measured in decimal fraction of inches.

The term "ton" will mean the short ton consisting of 2,000 pound avoirdupois. All materials which are measured or proportioned by weights shall be weighed on accurate, approved scales by competent, qualified personnel at locations designated by the Owner's Engineer.

If material is shipped by rail, the car weight may be accepted provided that only the actual weight of material be paid for. However, car weights will not be acceptable for material to be passed through mixing plants.

Trucks used to haul material being paid for by weight shall be weighed empty at least twice daily at such times as the Owner's Engineer directs, and each truck shall bear a plainly legible identification mark. Such empty weights shall be recorded with the time and truck identification on a Tare Sheet. Copies of each days Tare Sheets and the current scale certification shall be furnished to the Owner's Engineer with the pay request.

Materials **SHALL NOT** be measured by volume in the hauling vehicle unless approved in writing in advance by the Owner's Engineer.

When requested by the Contractor and approved by the Owner's Engineer in writing, material specified to be measured by the cubic yard may be weighed and such weights will be converted to cubic yards for payment purposes. Factors for conversion from weight measurement to volume measurement will be determined by the Owner's Engineer and shall be agreed to by the Contractor before such method of measurement of pay quantities is used.

Bituminous materials will be measured by the gallon or ton. When measured by volume, such volumes will be measured at 60 degrees F. or will be corrected to the volume at 60 degrees F. using ASTM D 1250 for asphalts or ASTM D 633 for tars.

Net certified scale weights or weights based on certified volumes in the case of rail shipments will be used as a basis of measurement, subject to correction when bituminous material has been lost from the car or the distributor, wasted, or otherwise not incorporated in the work.

When bituminous materials are shipped by truck or transport, net certified weights by volume, subject to correction for loss or foaming, may be used for computing quantities.

Portland cement, fly ash and lime will be measured by the ton or hundredweight.

Timber will be measured by the thousand feet board measure (M.F.B.M.) actually incorporated in the structure. Measurement will be based on nominal widths and thickness and the extreme length of each piece.

The term "lump sum" when used as an item of payment will mean complete payment for the work described in the contract. Contractor shall furnish a fee schedule to the Owner's Engineer at the preconstruction conference for all professional service lump sum items such as construction surveying and materials testing.

When a complete structure or structural unit (in effect, "lump sum" work) is specified as the unit of measurement, the unit will be construed to include all necessary fittings and accessories.

Rental of equipment will be measured by time in hours of actual working time and necessary traveling time of the equipment within the limits of the work. Special equipment ordered by the Owner's Engineer in connection with force account work will be measured as agreed in the change order or supplemental agreement authorizing such force account work as provided in the subsection titled PAYMENT FOR EXTRA AND FORCE ACCOUNT WORK of Section 90-05.

When standard manufactured items are specified such as fence, wire, plates, rolled shapes, pipe conduit, etc., and these items are identified by gauge, unit weight, section dimensions, etc., such identification will be considered to be nominal weights or dimensions. Unless more stringently controlled by tolerances in cited specifications, manufacturing tolerances established by the industries involved will be accepted.

Scales for weighing materials which are required to be proportioned or measured and paid for by weight shall be furnished, erected, and maintained by the Contractor, or by certified permanently installed commercial scales. Scales shall be accurate within one-half per cent of the correct weight throughout the range of use. The Contractor shall have the scales checked under the observation of the inspector before beginning work and at such other times as requested. The intervals shall be uniform in spacing throughout the graduated or marked length of the beam or dial and shall not exceed one-tenth of one per cent of the nominal rated capacity of the scale, but not less than one pound. The use of spring balances will not be permitted.

Beams, dials, platforms, and other scale equipment shall be so arranged that the operator and inspector can safely and conveniently view them.

Scale installations shall have available, ten standard fifty-pound weights for testing the weighing equipment or suitable weights and devices for other approved equipment.

Scales must be tested for accuracy and serviced before use at a new site. Platform scales shall be installed and maintained with the platform level and rigid bulkheads at each end.

Scales "overweighing" (indicating more than correct weight) will not be permitted to operate and all materials received subsequent to the last previous correct weighing-accuracy-test will be reduced by the percentage of error in excess of one-half of one per cent.

In the event inspection reveals the scales have been "under-weighing" (indicating less than correct weight) they shall be adjusted and no additional payment to the Contractor will be allowed for materials previously weighed and recorded.

All costs in connection with furnishing, installing, certifying, testing, and maintaining scales: for furnishing check weights and scale house; and for all other items specified in this subsection, for the weighing of materials for proportioning or payment, shall be included in the unit contract prices for the various items of the project.

When the estimated quantities for a specific portion of the work are designated as pay quantities in the contract, they shall be the final quantities for which payment for such specific portion of the work will be made, unless the dimensions of said portions of the work shown on the plans are revised by the Owner's Engineer. If revised dimensions result in an increase or decrease in the quantities of such work, the final quantities for payment will be revised in the amount represented by the authorized changes in the dimensions.

**90-02 SCOPE OF PAYMENT.** The Contractor shall receive and accept compensation provided for in the contract as full payment for furnishing all materials, for performing all work under the contract in a complete and acceptable manner, and for all risk, loss, damage, or expense of whatever character arising out of the nature of the work or the prosecution thereof, subject to the provisions of the subsection titled NO WAIVER OF LEGAL RIGHTS of Section 70-17.

When the "basis of payment" subsection of a technical specification requires that the contract price (price bid) include compensation for certain work or material essential to the item, this same work or material will not also be measured for payment under any other contract item which may appear elsewhere in the contract, plans or specifications.

Periodic progress payments shall be in accordance with A.R.S. §34-221.

**90-03 COMPENSATION FOR ALTERED QUANTITIES.** When the accepted quantities of work vary from the quantities in the proposal, the Contractor shall accept as payment in full, so far as contract items are concerned, payment at the original contract price for the accepted quantities of work actually completed and accepted. No allowance, except as provided for in the subsection titled ALTERATION OF WORK AND QUANTITIES of Section 40-02 will be made for any increased expense, loss of expected reimbursement, or loss of anticipated profits suffered or claimed by the Contractor which results directly from such alterations or indirectly from his unbalanced allocation of overhead and profit among the contract items, or from any other cause.

**90-04 PAYMENT FOR OMITTED ITEMS.** As specified in the subsection titled OMITTED ITEMS of Section 40-03, the Owner's Engineer shall have the right to omit from the work (order nonperformance) any contract item, except major contract items, in the best interest of the Owner.

Should the Owner's Engineer omit to order nonperformance of a contract item or portion of such item from the work, the Contractor shall accept payment in full at the contract prices for any work actually completed and acceptable prior to the Owner's Engineer's order to omit or non-perform such contract item.

Acceptable materials ordered by the contract or delivered on the work prior to the date of the Owner's Engineer's order will be paid for at the actual cost to the Contractor and shall thereupon become the property of the Owner.

In addition to the reimbursement hereinbefore provided, the Contractor shall be reimbursed for all actual costs incurred for the purpose of performing the omitted contract item prior to the date of the Owner's Engineer's order. Such additional costs incurred by the Contractor must be directly related to the deleted contract item and shall be supported by certified statements by the Contractor as to the nature and amount of such costs.

**90-05 PAYMENT FOR EXTRA AND FORCE ACCOUNT WORK.** Extra work, performed in accordance with the subsection titled EXTRA WORK of Section 40-04, will be paid for at the contract prices or agreed prices specified in the change order or supplemental agreement authorizing the extra work requiring that it be done by force account, such force account shall be measured and paid for as follows:

(a) Labor. For all labor (skilled and unskilled) and foremen in direct charge of a specific force account item, the Contractor shall receive the rate of wage (or scale) for every hour that such labor or foreman is actually engaged in the specified force account work. Such wage (or scale) shall be agreed upon in writing before beginning the work.

The Contractor shall receive the actual costs paid to, or in behalf of, workers by reason of subsistence and travel allowances, health and welfare benefits, pension fund benefits or other benefits, when such amounts are required by collective bargaining agreement or other employment contract generally applicable to the classes of labor employed on the work. An amount equal to 15 percent of the sum of the above items will also be paid the Contractor.

(b) Insurance and Taxes. For property damage, liability and workmen's compensation insurance premiums, unemployment insurance contributions, and social security taxes on the force account work the Contractor shall receive the actual cost, to which cost (sum) 5 percent will be added. The Contractor shall furnish satisfactory evidence of the rate or rates paid for such insurance and taxes.

(c) Materials. For materials accepted by the Owner's Engineer and used, the Contractor shall receive the actual cost of such materials delivered on the work, including transportation charges paid by him (exclusive of machinery rentals as hereinafter set forth), to which cost (sum) 15 percent will be added.

(d) Equipment. For any machinery or special equipment (other than small tools) including fuel and lubricants, plus transportation costs, the use of which has been authorized by the Owner's Engineer, the Contractor shall receive the rental rates in the current "Blue Book for Construction Equipment".

(e) Miscellaneous. No additional allowance will be made for general superintendence, the use of small tools, or other costs for which no specific allowance is herein provided.

(f) Comparison of Records. The Contractor and the Owner's Engineer shall compare records of the cost of force account work at the end of each day. Agreement shall be indicated by signature of the Contractor and Owner's Engineer or their duly authorized representatives.

(g) Statements. No payment will be made for work performed on a force account basis until the Contractor has furnished the Owner's Engineer with duplicate itemized statements of the cost of such force account work detailed as follows:

(1) Name, classification, date, daily hours, total hours, rate and extension for each laborer and foreman.
(2) Designation, dates, daily hours, total hours, rental rate and extension for each unit of machinery and equipment.
(3) Quantities of material, prices, and extensions.
(4) Transportation of materials.
(5) Cost of property damage, liability and workmen's compensation insurance premiums, unemployment insurance contribution and social security tax.

Statements shall be accompanied and supported by receipted invoice for all materials used and transportation charges. However, if materials used on the force account work are not specifically purchased for such work but are taken from the Contractor's stock, then in lieu of the invoices the Contractor shall furnish an affidavit certifying that such materials were taken from his stock, that the quantity claimed, was actually used, and that the price and transportation claimed represent the actual cost to the Contractor.

The additional payment, based on the percentages specified above, shall constitute full compensation for all items of expense not specifically provided for in the force account work. The total payment made as provided above shall constitute full compensation for such work.

**90-06 ACCEPTANCE AND FINAL PAYMENT.** When the contract work has been accepted in accordance with the requirements of the subsection titled FINAL ACCEPTANCE of Section 50-15, the Owner's Engineer will prepare the final estimate of the items of work actually performed. The Contractor shall approve the Owner's Engineer's final estimate or advise the Owner's Engineer of his objections to the final estimate which are based on disputes in measurements or computations of the final quantities to be paid under the contract as amended by change order or supplemental agreement. The Contractor and Owner's Engineer shall resolve all disputes (if any) in the measurement and computation of final quantities to be paid within 30 calendar days of the Contractor's receipt of the Owner's Engineer's final estimate. If, after such 30-day period, a dispute still exists, the Contractor may approve the Owner's Engineer's estimate under protest of the quantities in dispute and such disputed quantities shall be considered by the Owner as a claim in accordance with the subsection titled CLAIMS FOR ADJUSTMENT AND DISPUTES of Section 50-16.

After the Contractor has approved, or approved under protest, the Owner's Engineer's final estimate, final payment will be processed based on the entire sum, or the undisputed sum in case of approval under protest, determined to be due the Contractor less all previous payments and all amounts to be deducted under the provisions of the contract. All prior partial estimates and payments shall be subject to correction in the final estimate and payment.

Contractor shall provide an executed Affidavit of Release of Liens and an Affidavit of Payment to the Owners Engineer prior to the release of the final payment.

If the Contractor has filed a claim for additional compensation under the provisions of the subsection titled CLAIMS FOR ADJUSTMENTS AND DISPUTES of Section 50-16 or under the provisions of this subsection, such claims will be considered by the Owner in accordance with local laws or ordinances. Upon final adjudication of such claims, any additional payment determined to be due the Contractor will be paid pursuant to a supplemental, final estimate.

# SPECIAL PROVISIONS

# SP-1 TO SP-7

# SPECIAL PROVISIONS

## PINE CREEK CANYON ROAD RECONSTRUCTION PROJECT

## 1. PROPOSED WORK

The work consists of clearing and grubbing, removal of existing structures (e.g., asphaltic pavement, drainage pipe, guardrail,…etc.) interfering with the work, installation of miscellaneous concrete items, keystone walls, corrugated metal pipe, guardrail, dumped rock riprap, asphaltic concrete pavement, aggregate base course and other work as shown within the plans.

## 2. GENERAL REQUIREMENTS

The project has been designed utilizing the Arizona Department of Transportation (ADOT) Construction Standard Drawings (Latest Series), and 2008 Standard Specifications, with appropriate current revisions along with Uniform Standard Specifications for Public Works Construction (Latest Edition and Revisions), Maricopa Association of Governments. Wherever reference in the Standard Specifications is made to MAG, ADOT, the Owner, or the Department: it shall refer to Gila County.

In the event of any conflict between the plans and Standard Specifications, the plans shall prevail. In the event of any conflict between these Special Provisions and the plans or Standard Specifications, these Special Provisions shall prevail.

The following STANDARD SPECIFICATIONS and/or details are considered a part of these Contract Documents and are considered as binding as if actually attached hereto:

- Arizona Department of Transportation, Highways Division, Standard Specifications for Road and Bridge Construction, Edition of 2008,

- Arizona Department of Transportation, Highways Division, Standard Drawings, listed in the project plans and defined hereinafter,

- Manual on Uniform Traffic Control Devices, Millennium Edition, and Amendments.

- Uniform Standard Specifications for Public Works Construction (Latest Edition and Revisions). Maricopa Association of Governments.

## 3. POINTS AND INSTRUCTION AND AS-BUILTS

The Contractor will furnish and set control stakes and points for line and grade and will furnish the Engineer with the necessary information relating to such stakes and points.

The Contractor will provide such intermediate stakes as he may need to set to comply with these Specifications.

The Contractor shall carefully preserve benchmarks, reference points and stakes, and in case of willful or careless destruction, he shall be charged with the resulting expense of replacement, and shall be responsible for any mistakes that may be caused by their unnecessary loss or disturbance.

In the event that it is necessary for the OWNER to duplicate his work because of acts of omission or negligence on the part of the Contractor, or because of the removal of defective work, such additional cost of engineering shall be borne by the Contractor.

When the work is completed, the Contractor shall provide the OWNER with a set of as-built drawings on clean prints of the original drawings. The as-built drawings shall indicate in a neat and accurate manner all changes and revisions in the original design which affect the permanent structures and which exist in the completed work. All underground utilities relocated under this contract shall be referenced to semi-permanent or permanent physical objects.

The alterations and references shall be made with colored ink and shall be sufficiently clear and complete to enable reproducing these changes on the original tracings. The Engineer will document these changes on the original tracings and forward the tracings to the Contractor for review and signature. The registered Professional Land Surveyor who performed the Final Survey shall certify the As-Built information by signing and sealing the tracings for the Contractor. Final payment of this contract will not be made to the Contractor until the As-Built drawings are satisfactorily produced and certified.

As-Built conditions shall be kept current. They shall be inspected for accuracy and completeness monthly. The Contractor shall certify on his monthly payment requisition that the drawings are accurate and complete before the monthly payment estimate will be prepared and approved.

## 4. CONSTRUCTION LIMITS

The Contractor shall not disturb any vegetation or operate any equipment outside the approved clearing limits as defined in ADOT Standard Specifications, Section 201 - Clearing and Grubbing and as specified in the Technical Specifications. These limits shall be known as the Construction Limits. Deviation outside these limits is not authorized.

The Owner shall provide land, right-of-way, and easements for all work specified in this contract, except that the Contractor shall provide additional land if required for the erection of temporary construction facilities for storage of his material, together with right of access to same. The Contractor shall not enter or occupy with men, tools, equipment or materials, any private property without written consent of the Owner thereof.

The Contractor shall submit at the preconstruction conference a map showing the proposed location of his Contractor's yard. The location of the yard is subject to the approval of the Owner. The Contractor is responsible for the security of his yard and the equipment and materials stored at the yard or construction site. Damage, theft, vandalism, or loss of such equipment or materials is the responsibility of the Contractor. The Contractor will not be compensated for replacement, repair, or refusal of materials by the Engineer damaged by vandalism or theft. The Contractor will take whatever measures are necessary to secure his yard, equipment, and materials. Security measures such as yard fences, security guards, locks, chains, etc. are incidental to the work for this project.

## 5. OPERATION AND TRAFFIC CONTROL PLANS

The Contractor shall submit to the Owner for approval his proposed sequence of operations and a compatible method of maintaining traffic as described in ADOT Section 107 of the Standard Specifications and the Technical Provisions. The Contractor shall submit to the Owner a Traffic Control Plan sealed by an Arizona registered Professional Civil Engineer. The proposal and plan shall be submitted at the preconstruction conference. The Owner shall notify the Contractor of any required changes to the proposal/plan and the Contractor shall address any and all revisions. The Contractor shall be aware that the only available detour route permitted to be used during construction is Cedar Meadow Lane.

## 6. QUALITY CONTROL PLAN

The Owner shall be responsible for Quality Control. The Contractor shall provide access to all parts of the work and material sources for the Owner obtain all necessary sampling and testing and shall schedule all required testing with the Owner. The Owner shall have the right, at any stage of the operations, to reject any and all work and material that, in his/her opinion, do not meet the requirements of the specifications.

The Contractor shall be responsible for coordination and scheduling of all required sampling with the Owner’s Quality Control representative and/or company. The Owner shall provide to the Contractor with all necessary contact information.

## 7. SAMPLING AND TESTING

All testing and sampling as specified herein shall be performed by a geotechnical laboratory. Unless otherwise specified, the cost of the laboratory testing, heavy equipment rental and labor incident to practical tests specified shall be at the Owner's expense.

The Contractor shall notify, during the preconstruction conference, the Owner of the proposed sources of all materials required by the Specifications to be tested. Before work starts sufficient time shall be allowed for the taking of samples and completing tests required.

For the verification of weights and character of materials, the Owner shall have access at all reasonable times to all parts of the work, plants, and assembly yards connected with the work. The Contractor shall facilitate and assist in the verification of all scales, measures and other devices, which he operates. Reference to ASTM and other Standard Specifications shall be considered to mean current standards. If it is found that sources of supply that have been approved do not furnish a uniform product, or if the product from any source proves unacceptable at any time, the Contractor shall furnish approved material from other approved sources. No material which, after approval, has in any way become unfit for use shall be used in the work. The approval of any material represented by any sample or samples shall not be taken as a guarantee of all materials from the source; and it shall be understood that all materials delivered to the site are subject to test at any time and will be rejected if they do not meet the requirement of the Specifications.

## 8. MEASUREMENT AND PAYMENT

Measurement will be in place for the completed work, with no allowance for waste, and as may be more particularly described in the description of the various items set forth in the Standard Specifications and as shown on the plans. All earthwork, fill and excavation, submitted for payment shall be certified by an Arizona registered Professional Land Surveyor in support of the work performed by the Contractor.

No additional payments will be made for work related to any item unless specifically noted and called for in the Proposal. Payment will be made at the unit price or lump sum price bid in the Proposal.

In addition to the requirements set forth in the ADOT Standard Specifications, no measurement or direct payment will be made for the following work. The cost for such work shall be considered as included in the price of other contract items.

A. Removal and salvage items as called for on the plans, in the Standard Specifications, or these Special Provisions.
B. Removal, salvage and/or re-installation of existing fence lines.
C. Sampling, testing, certification, and other quality control actions.
D. Disposal of surplus, waste or non-salvageable materials.
E. Grading of drainage ditches and drainage excavation not called out on the plans.
F. Preparation and submittal of operation, traffic control, and storm water pollution prevention plans, whether specified herein or required by the other agencies.

G. Obtaining and maintaining any required environmental and/or other permits and licenses.

The quantities set forth in the Proposal are used for the purpose of determining the basis of the award of the Contract, and may be increased or decreased 10% or less by the Owner to conform to the requirements of the work as set forth on the plans, and the Contractor shall agree to perform the work on the basis of the prices bid for the items contained in the Proposal regardless of whether or not the items or units are decreased or increased.

The Engineer or the Owner shall have the right to order omitted from the Contract any minor item found unnecessary to the work without violating the Contract or Performance Bond, and without any compensation to the Contractor.

To ensure the Contractor's satisfactory performance of the Contract, progress payments shall be subject to retainage pursuant to A.R.S. §34-221 in the amount of 10% of the approved estimate of the Work performed in the preceding calendar month. When the Work is 50% complete, the retainage shall be reduced to 5% so long as the Contractor is making satisfactory progress. If the Owner determines in writing that the Contractor is not making satisfactory progress at any time, the 10% retainage may be reinstated. In lieu of retainage, the Contractor may post substitute security meeting the requirements of A.R.S. §34-221.

## 9. HAUL ROUTE

The Contractor is to submit haul routes to the Owner for approval.

## 10. DUST CONTROL

The Contractor shall use all methods in the control of dust as set forth by A.R.S. §49-401 and the ADOT Standard Specifications Section 207. The cost thereof is to be included in the unit construction cost.

## 11. TEMPORARY CONSTRUCTION EASEMENTS

Temporary construction easements will be obtained by the Owner prior to construction. The Contractor shall be responsible for returning any disturbed areas, not shown as an improvement or change within the plans, to original condition after work has been completed or as otherwise agreed upon with the landowner. No additional cost for this work will be made to the Contractor, the cost being part of the unit cost of construction for the project.

## 12. OWNER'S FIELD OFFICE

The Owner's field office, as called for under Section 60-05 of the General Provisions, shall not be required of the Contractor for this project.

## 13. BLASTING NOTIFICATION

Blasting shall not be permitted within any portion of the project at any time.

## 14. CONFLICTING UTILITY SYSTEMS

The Contractor shall be aware that within the project limits there are utility systems that conflict with the proposed work. The Contractor is not responsible for resolving these conflicts. Such shall be the sole responsibility of each individual utility owner. However, the Contractor shall coordinate directly with each utility owner to insure that the work progresses and notify the Owner on all matters. A list of all known utility owner contact names and phone numbers is shown within the plans.

The Contractor shall be aware of several utility systems existing within and adjacent to the project limits. The Contractor shall be responsible for any damage to the utilities. The Contractor shall be aware of overhead utility lines along, near and crossing roadways within and/or adjacent to the project limits. The Contractor shall be responsible for any damage to any overhead utilities or their support structures.

## 15. DISPOSAL OF REMOVED VEGETATION OR UNSUITABLE MATERIALS

The Contractor shall dispose all removed vegetation and/or any unsuitable materials in a location as designated or approved by the Public Works Director. Disposal of said material in another location(s) shall be submitted to the OWNER for approval prior to disposal activities.

## 16. KEYSTONE WALLS

The Contractor shall be responsible for the design of all Keystone Wall systems shown within the project. The Contractor shall submit all necessary documentation to the Gila County Public Works Director for review and approval prior to construction of said item. The block type shall be Compact II and color shall be "brown".

## 18. WATERLINE CONSTRUCTION

Waterline construction and all requirements shall be as shown within the plans, specifications and requirements prepared by Verde Engineering Group, PLLC.

# TECHNICAL SPECIFICATIONS

# T-1 TO T-7

# TECHNICAL SPECIFICATIONS

## PINE CREEK CANYON ROAD RECONSTRUCTION PROJECT
## PINE, ARIZONA

## 109 FORCE ACCOUNT WORK

Force Account Work shall be in accordance with Section 109 of the ADOT Standard Specifications unless modified herein.

## 201 CLEARING AND GRUBBING

Clearing and Grubbing shall be in accordance with Section 201 of the ADOT Standard Specifications unless modified herein.

**201-1 Description:** the first paragraph is revised to read:

The work under this section shall consist of removing and disposing of all vegetation, rubbish, trees, debris and other objectionable matter only from those areas required to install the proposed work unless otherwise shown on the plans or specified in the Special Provisions.

**201-2 Removal of Disposal Materials:** the first paragraph is revised to read:

All materials removed in clearing and grubbing shall be disposed of in locations subject to the OWNER's approval prior to said disposal. Disposal of materials within the project right-of-way or within the project limits is not permitted.

**201-4 Method of Measurement:** is revised to read:

No measurement shall be made for Clearing and Grubbing.

**201-5 Method of Payment:** first paragraph is revised to read:

The accepted quantities of clearing and grubbing, including all necessary trees, the cost thereof shall be as shown within the bid proposal.

## 202 REMOVAL OF STRUCTURES AND OBSTRUCTIONS

Removal of Structures and Obstructions shall be in accordance with Section 202 of the ADOT Standard Specifications unless modified herein.

## 203 EARTHWORK

Earthwork shall be in accordance with Section 203 of the ADOT Standard Specifications unless modified herein.

## 209 FURNISH WATER:

Furnish Water shall be done in accordance with Section 209 of the ADOT Standard Specifications unless modified herein.

**209-1 Description:** add the following paragraph.

Water shall be free of contaminants that in the opinion of the Owner or Owner's Engineer constitute a health hazard.

**206-4 Method of Measurement:** is revised to read:

No measurement or payment will be made for furnish water, the cost being considered as included in the cost of other contract items.

**206-5 Basis of Payment:** is revised to read:

No measurement or payment will be made for furnish water, the cost being considered as included in the cost of other contract items.

## 211 FILL CONSTRUCTION

Fill Construction shall be in accordance with Section 211 of the MAG Standard Specifications unless modified herein or stated within the plans.

## 301 SUBGRADE PREPARATION

Subgrade Preparation shall be in accordance with Section 301 of the MAG Standard Specifications unless modified herein or stated within the plans.

## 303 AGGREGATE SUBBASES AND AGGREGATE BASES

Aggregate Base Course shall be Class II in accordance with Section 303 of the ADOT Standard Specifications unless modified herein.

## 321 ASPHALT CONCRETE PAVEMENT

Asphaltic Concrete Pavement shall be in accordance with Section 321 of the MAG Standard Specifications unless modified herein. The pavement structural section (upper section) shall require two separate 2-inch lifts (i.e., layers).

## 340 CONCRETE CURB, GUTTER, SIDEWALK, SIDEWALK RAMPS, DRIVEWAY AND ALLEY ENTRANCE

Concrete curb, gutter, sidewalk, sidewalk ramps, driveway and alley entrances shall be in accordance with Section 340 of the MAG Standard Specifications unless modified herein.

**340-2 Materials**: of the Standard Specifications add the following:

All concrete shall be color tinted using Davis-Color /mix ready/ dry/ color group standard/ San Diego Buff # 5237 mixed at 4 lbs per yard excluding concrete driveways when the existing color is standard concrete.

## 405 MONUMENTS

Monuments shall be in accordance with Section 405 of the MAG Standard Specifications, except as modified herein or within the plans.

## 607 ROADSIDE SIGN SUPPORTS

Roadside Sign Supports shall be in accordance with Section 607 of the ADOT Standard Specifications unless modified herein.

## 608 SIGN PANELS

Sign Panels shall be in accordance with Section 608 of the ADOT Standard Specifications unless modified herein. Unless otherwise noted within the plans all sheeting shall be per ADOT Traffic Engineering PGP, Section 380, latest edition.

## 621 CORRUGATED METAL PIPE AND ARCHES

Corrugated Metal Pipe and Arches shall be in accordance with Section 621 of the MAG Standard Specifications unless modified herein.

## 701 MAINTENANCE AND PROTECTION OF TRAFFIC

Maintenance and Protection of Traffic shall be in accordance with Section 701 of the ADOT Standard Specifications, except as modified herein**.**

**701-3.08 Changeable Message Board**: the first sentence of the first paragraph is revised to read:

The Contractor shall furnish two message boards to be placed in a location(s) as designated by the Owner prior to construction and relocated during construction as required by the Owner.

## 708 PAINTED PAVEMENT MARKINGS

Painted Pavement Markings shall be in accordance with Section 708 of the ADOT Standard Specifications unless modified herein.

## 760 COATING CORRUGATED METAL PIPE AND ARCHES

Coating Corrugated Metal Pipe and Arches shall be in accordance with Section 760 of the MAG Standard Specifications unless modified herein.

**760-1 General**: the last sentence is revised to read:

The size and type of the pipe to be furnished shall be as specified on the project plans. The thickness of all pipe, unless otherwise states within the project plans, shall be 0.064 inches.

## 810 EROSION CONTROL AND POLLUTION PREVENTION (SWPPP)

An Erosion Control and Pollution Prevention Plan shall be required for this project as the estimated disturbed area is equal to or greater than 43,560 square feet.

Erosion Control shall be in accordance with Section 810, Erosion Control and Pollution Prevention, of the ADOT Standard Specifications, unless modified herein and shall be known as SWPPP herein.

**810-1 Description:** is revised to read:

The Contractor is required to prepare and submit a Storm Water Pollution Prevention Plan (SWPPP) and an Arizona Pollutant Discharge Elimination System (AzPDES) permit to the Arizona Department of Environmental Quality and provide the Owner with a copy of all correspondence demonstrating that all requirements and approval to begin the work has been met.

All work specified in this subsection will be temporary for use during construction, unless designated otherwise.

The Contractor shall be responsible for maintaining all erosion and pollution control devices in proper functioning condition at all times during Construction. After completion and final approval of construction activities the Owner shall be responsible for maintaining all erosion and pollution control devices.

When deficiencies in the erosion control devices or other elements of work listed herein are noted by inspection or other observation, specified corrections shall be made by the contractor by the end of the day or work shift, or as directed by the Engineer.

Work specified herein which is lost, destroyed, or deemed unacceptable by the Engineer as a result of the Contractor's operations shall be replaced. Work specified herein which is lost or destroyed, as a result of natural events, such as excessive rainfall, shall be replaced by the Contractor.

In cases of serious or willful disregard for the protection of the waters of the U.S. and/or natural surroundings by the contractor, the Engineer will immediately notify the Contractor of such non-compliance.

**810-2.03 Riprap and Rock Mulch:** is revised to read:

Rock check dams or similar methods using rock rip rap or rock mulch shall not be used for erosion control methods on this project. The Contractor shall employ the methods as described within Section 810-2.02 of the ADOT Standard Specifications.

**810-4 Method of Measurement:** is revised to read:

No measurement shall be made for Erosion Control and Pollution Prevention (SWPPP). The contract unit of measurement shall be lump sum.

**810-5 Basis of Payment:** is revised to read:

Payment for Erosion Control and Pollution Prevention (SWPPP) shall be lump sum and shall be full compensation for work necessary to complete said Erosion Control and Pollution Prevention (SWPPP) including all necessary permits, plans, and documentation.

## 901 MOBILIZATION

Mobilization shall be in accordance with Section 901 of the ADOT Standard Specifications.

## 905 GUARD RAIL

Guard Rail shall be in accordance with Section 905 of the ADOT Standard Specifications.

## 913 BANK PROTECTION

Bank Protection shall be in accordance with Section 913 of the ADOT Standard Specifications unless modified herein.

## 925 CONSTRUCTION SURVEYING AND LAYOUT AND AS-BUILT DRAWINGS:

Construction Surveying and Layout shall be in accordance with Section 925 of the ADOT Standard Specifications, except as modified herein.

**925-1.01 As-Builts:** add the following section:

Upon completion of the work, the Contractor shall perform an as-built survey of all portions of the work including but not limited to; pavements: centerline and edges where superelevation occurs; keystone walls: the alignment and elevation of all concrete footings for wall(s); beginning of top of wall, all changes in the footer and/or top of wall elevation change, changes in horizontal direction of the wall (i.e., angle points) and all points necessary to locate all concrete and other related work as shown within the plans (e.g., sidewalk, ramps including but not limited to changes in elevation, curbing, gutter flowline, concrete stairs, pavement, handrails…etc.), guardrail, pavement along all mainline roadways (i.e., not including private driveway features), all culvert pipe including at driveways, storm drain systems,….etc. The survey work shall be performed and certified by an Arizona registered Professional Land Surveyor. Datum of the survey shall be based on the benchmark information as shown on the Project Plans. Three (3) sets of the signed and sealed survey document shall be submitted to the Engineer for review and approval. As-built drawings shall also contain the following.

A. The as-built drawings shall indicate in a neat and accurate manner all changes and revisions in the original design which affect the permanent structures and which exist in the completed work. All underground utilities relocated under this contract shall be referenced to semi-permanent or permanent physical objects.

B. The alterations and references shall be made with colored ink and shall be sufficiently clear and complete to enable reproducing these changes on the original tracings. The Engineer will document these changes on the original tracings and forward the tracings to the Contractor for review and signature. The registered Professional Land Surveyor who performed the Final Survey shall certify the As-Built information by signing and sealing the tracings for the Contractor.

   Final payment of this contract will not be made to the Contractor until the As-Built drawings are satisfactorily produced and certified.

C. As-Built conditions shall be kept current. They shall be inspected for accuracy and completeness monthly. The Contractor shall certify on his monthly payment requisition that the drawings are accurate and complete before the monthly payment estimate will be prepared and approved.

**925-4 Method of Measurement:** is revised to read:

No measurement shall be made for Construction Survey and Layout and As-Builts. The contract unit of measurement shall be lump sum.

**925-5 Basis of Payment:** is revised to read:

Payment for Construction Survey and Layout and As-Builts shall be lump sum and shall be full compensation for all work necessary to complete said Construction Survey and Layout and As-builts.

***Contract Forms are a binding part of**
**Informal Bid Documents and Awarded Contract.***

## CONTRACT FORMS

| | |
|---|---|
| **Proposal** | **P-1 to P-3** |
| **Bidding Schedule** | **BS-1 to BS-6** |
| **Bid Bond** | **BB-1** |
| **Qualification & Certification** | **QC-1 to QC-2** |
| **Reference List** | **RL-1** |
| **Affidavit of Non-Collusion** | **ANC-1** |
| **Subcontractor Certification** | **SC-1** |
| **Checklist & Addenda Acknowledgment** | **CK-1** |
| **Contract** | **C-1 to C-7** |
| **Contract Performance Bond** | **CPB-1** |
| **Labor and Materials Bond** | **LMB-1** |
| **Contract Performance Warranty** | **CPW-1** |
| **IRS W-9 Form** | **W-9** |

# PROPOSAL

**TO THE GILA COUNTY PUBLIC WORKS DIVISION:**

**Gentlemen:**

The following Proposal is made for the **BID NO. 111311-1, PINE CREEK CANYON ROAD RECONSTRUCTION PROJECT, PINE, ARIZONA**, in the County of Gila in the State of Arizona.

The following Proposal is made on behalf of

_____

_____

_____

and no others. The Proposal is in all respects fair and is made without collusion on the part of any person, firm or corporation mentioned above, and no member or employee of Gila County is personally or financially interested, directly or indirectly, in the Proposal, or in any purchase or sale of any materials or supplies for the work to which it relates, or in any portion of the profits thereof.

The undersigned certifies that the approved Plans, Technical Specifications, General and Special Provisions and forms of Contract and Bond authorized by Gila County and constituting essential parts of this Proposal, have been carefully examined, and also that the site of the work has been personally inspected. The undersigned declares that the amount and nature of the work to be done is understood and that at no time will misunderstanding of the Plans, Technical Specifications, General Provisions, Special Provisions, or conditions to be overcome, be plead. On the basis of Plans, Technical Specifications, General and Special Provisions, each Addendum (if any) and the forms of Contract and Bond proposed for use, the undersigned proposes to furnish all the necessary equipment, materials, machinery, tools, apparatus, and other means of construction, and labor, to do all the work in the manner specified and to finish the entire project within the time hereinafter proposed, and to accept, as full compensation therefore, the sum of the various products obtained by multiplying each unit price, herein bid for the work or materials on the attached Bidding Schedule, by the quantity thereof actually incorporated in the complete project, as determined by the Public Works Director. The undersigned understands that the quantities mentioned herein are approximate only and are subject to increase or decrease and hereby proposes to perform all quantities of work as either increased or decreased, in accordance with the provisions of the Specifications, at the unit price bid in the attached Bidding Schedule.

The undersigned further proposes to perform all extra work that may be required on the basis provided in the Specifications and to give such work personal attention and to secure economical performance.

The undersigned further proposes to execute the Contract Agreement and furnish satisfactory Bonds within ten (10) calendar days from the date of Notice of Award, time being of the essence. The undersigned further proposes to begin work as specified in the contract attached hereto, and to complete the work **within one hundred and eighty (180) Calendar Days of the Notice to Proceed,** and maintain at all times a Payment Bond and Performance, Labor and Material Bonds, approved by the Public Works Director, in an amount equal to one hundred (100) percent of the total bid. These bonds shall serve not only to guarantee the completion of the work on the part of the undersigned, but also to guarantee the excellence of both workmanship and material and the payment of all obligations incurred, until the work is finally accepted and the provisions of the Plans, Standard Specifications and Special Provisions fulfilled.

A Proposal Guaranty in the amount and character named in the Call for Bids is enclosed amounting to not less than ten (10) percent of the total bid, which Proposal Guaranty is submitted as a guaranty of the good faith of the bidder and that the bidder will enter into written contract, as provided, to do the work, if successful in securing the award thereof, and it is hereby agreed that if at any time other than as provided in the Proposal requirements and conditions the undersigned should withdraw this Proposal, or if the Proposal is accepted and there should be failure on the part of the undersigned to execute the Contract and furnish satisfactory Bond as herein provided, Gila County, in either of such events, shall be entitled and is hereby given the right to retain the said Proposal Guaranty as liquidated damages.

**If by a Corporation:**

**(SEAL)**

**Corporate Name**:_____

**Corporate Address**:_____

**Incorporated under the laws of the State of:**_____

**By (Signature):**_____ **Date**:_____

**President**:_____

**Secretary:**_____

**Treasurer**:_____

**If by a Firm or Partnership:**

**Firm or Partnership Name:**_____

*Proposal continued…*

**Firm or Partnership Address:**_____

**By (Signature):**_____ **Date**:_____

**Name and Address of Each Member**:_____

_____

_____

_____

_____

**If by an Individual:**

**Signature:**_____ **Date**:_____

**BIDDING SCHEDULE**

**PINE CREEK CANYON ROAD RECONSTRUCTION PROJECT**
**GILA COUNTY, ARIZONA**

We agree to provide all work and material necessary to complete the project as shown on the plans and specifications for the following Contract Price:

**Firm Name:** _____

**TOTAL CONTRACT PRICE, for the sum of $** _____

**WRITTEN TOTAL CONTRACT PRICE**

_____**Dollars**

**and** _____**Cents.**

This Contract Price is based upon the Bidder's quantities and unit prices tabulated on Pages BS-2 of the Proposal. The Bidder agrees that the Contract Price will be payment in full for all work shown on the plans and described in the Contract Documents.

Any authorized increases or decreases to the work shall be authorized by Change Order. The Contract Price shall be increased or decreased by the amount of work or material increased or decreased at the following Bid Unit Prices.

**BIDDING SCHEDULE**

**Firm Name:** _____

**COST SUMMARY BREAK DOWN ROADWAY ITEMS**

| ITEM | DESCRIPTION | UNIT | ESTIMATED QUANTITIES | UNIT PRICE | EXTENDED AMOUNT |
|---|---|---|---|---|---|
| 109 | Force Account Work | L.S. | 1 | $100,000 | $100,000 |
| 201.1 | Clearing and Grubbing | L.S. | 1 | | |
| 202.1 | Remove Misc. Structures and Obstructions | L.S. | 1 | | |
| 203 | Earthwork | L.S. | 1 | | |
| 211 | Fill Construction | L.S. | 1 | | |
| 301 | Subgrade Preparation | S.Y. | 16,215 | | |
| 310 | Aggregate Base Course - ADOT Class II | C.Y. | 3,240 | | |
| 321 | Asphaltic Concrete - MAG | Ton | 3,679 | | |
| 340.1 | Concrete Driveway | S.F. | 1,762 | | |
| 340.2 | Concrete Headwall, ADOT B-11.11 | EA. | 1 | | |
| 340.3 | Concrete Wall* | S.F. | 372 | | |
| 340.4 | Concrete Half-Barrier, ADOT Std. Dtl., C-10.50 | L.F. | 96 | | |
| 340.5 | Concrete Half-Barrier Transition, ADOT Std. Dtl., C-10.75 | L.F. | 40 | | |
| 405 | Survey Monument | EA. | 16 | | |
| 501 | Cement Treated Slurry | C.Y. | 20 | | |
| 511 | Keystone Wall, Compact II Block* | S.F. | 2,750 | | |
| 607.1 | New Sign Panel, STOP, R1-1, 36"x36" | EA. | 1 | | |

**COST SUMMARY BREAK DOWN ROADWAY ITEMS** *continued*

| ITEM | DESCRIPTION | UNIT | ESTIMATED QUANTITIES | UNIT PRICE | EXTENDED AMOUNT |
|---|---|---|---|---|---|
| 607.2 | New Sign Panel, STOP, R1-1, 30"x30" | EA. | 5 | | |
| 607.3 | New Sign Panel, HILL BLOCKS VIEW, W7-6, 30"x30" | EA. | 2 | | |
| 607.4 | New Sign Panel, 20 MPH, W13-1, 24"x18" | EA. | 4 | | |
| 607.5 | New Sign Panel, 15 MPH, W13-1, 24"x18" | EA. | 1 | | |
| 607.6 | New Sign Panel, SPEED LIMIT 25, R2-1, 24"x30" | EA. | 3 | | |
| 607.7 | New Sign Panel, winding road symbol, W1-5, 30"X30" | EA. | 2 | | |
| 607.8 | New Sign Panel, roadway turn symbol, W1-1L, 30"X30" | EA. | 1 | | |
| 607.9 | New Sign Post and Foundation - ADOT S-1 (non-slip) | EA. | 15 | | |
| 621.1 | Pipe, Corrugated Metal, 12" | LF | 75 | | |
| 621.2 | Pipe, Corrugated Metal, 15" | LF | 780 | | |
| 621.3 | Pipe, Corrugated Metal, 24" | LF | 160 | | |
| 621.4 | Pipe, Corrugated Metal, 42" | LF | 88 | | |
| 621.5 | Pipe, Corrugated Metal, 28"x20" | LF | 141 | | |
| 621.6 | Pipe, Corrugated Metal, 49"x29" | LF | 48 | | |
| 621.7 | Pipe, Smooth Wall Metal, 24" | LF | 255 | | |
| 621.8 | Flared Metal End Section, 24", ADOT Std. Dtl. C-13.25 | EA. | 2 | | |
| 708.1 | Permanent Pavement Marking (Painted)(White)(4" Equiv) | LF | 63 | | |
| 708.2 | Permanent Pavement Marking (Painted)(Yellow)(4" Equiv) | LF | 13,751 | | |
| 708.9 | Maintenance and Protection of Traffic | L.S. | 1 | | |
| 810 | Erosion Control and Pollution Prevention (SWPPP) | L.S. | 1 | | |

**COST SUMMARY BREAK DOWN ROADWAY ITEMS** *continued*

| ITEM | DESCRIPTION | UNIT | ESTIMATED QUANTITIES | UNIT PRICE | EXTENDED AMOUNT |
|---|---|---|---|---|---|
| 901 | Mobilization | L.S. | 1 | | |
| 903.1 | Dumped Rock RipRap, D50=9" | C.Y. | 543 | | |
| 903.2 | Gabion Mattress | C.Y. | 28 | | |
| 905.1 | Guardrail | LF | 13 | | |
| 905.2 | Guardrail, End Terminal, ET-PLUS | EA. | 4 | | |
| 905.3 | Guardrail, End Anchor, ADOT Std. Dtl. C-10.08 | EA. | 1 | | |
| 925 | Construction Survey and Layout and As-builts | L.S. | 1 | | |
| | | | | **Total Base Bid Roadway** | |

*wall items are measured in square foot face of wall

**COST SUMMARY BREAK DOWN WATERLINE ITEMS**

| ITEM | DESCRIPTION | UNIT | ESTIMATED QUANTITIES | UNIT PRICE | EXTENDED AMOUNT |
|---|---|---|---|---|---|
| 1 | 2" PVC Watermain | 40 | LF | | |
| 2 | 4" PVC Watermain | 30 | LF | | |
| 3 | 6" PVC Watermain | 40 | LF | | |
| 4 | 8" PVC Watermain | 5,032 | LF | | |
| 5 | 2" Tap and Valve, Box & Cover | 1 | EA | | |
| 6 | 2" Valve, Box & Cover | 1 | EA | | |
| 7 | 4" Valve, Box & Cover | 1 | EA | | |
| 8 | 6" Valve, Box & Cover | 3 | EA | | |
| 9 | 8" Valve, Box & Cover | 15 | EA | | |
| 10 | 8" x 4" Tee | 1 | EA | | |
| 11 | 8" x 8" Tee | 3 | EA | | |
| 12 | 6" x 6" Tee | 1 | EA | | |
| 13 | 8” x 6” Tee | 3 | EA | | |
| 14 | 6" X 2" Reducer | 1 | EA | | |
| 15 | 8" x 4" Reducer | 3 | EA | | |
| 16 | Watermain Sample Tap | 6 | EA | | |
| 17 | 8" x 22.5$^{o}$ Bend | 1 | EA | | |
| 18 | 8" x 90$^{o}$ Bend | 2 | EA | | |
| 19 | 6" x 90$^{o}$ Bend | 2 | EA | | |
| 20 | 6” Fire Hydrant Complete | 9 | EA | | |

**COST SUMMARY BREAK DOWN WATERLINE ITEMS** *continued*

| ITEM | DESCRIPTION | UNIT | ESTIMATED QUANTITIES | UNIT PRICE | EXTENDED AMOUNT |
|---|---|---|---|---|---|
| 21 | Blow-Off Valve | 1 | EA | | |
| 22 | Air Release Valve | 1 | EA | | |
| 23 | 6" X 6" Tapping Sleeve and Valve, Box & Cover | 1 | EA | | |
| 24 | 6” Check Valve, Box & Cover | 1 | EA | | |
| 25 | 8” Check Valve, Box & Cover | 1 | EA | | |
| 26 | 2" Water Service & Tap, Cap @ R/W | 2 | EA | | |
| 27 | 1" Water Service & Tap, Cap @ R/W | 8 | EA | | |
| 28 | 1" Double Water Service & Tap, Cap @ R/W | 9 | EA | | |
| 29 | Cap Watermain for Future Connection | 6 | EA | | |
| 30 | Connect to Existing Watermain | 1 | EA | | |
| 31 | Construction Survey | 1 | EA | | |
| 32 | QA/QC | 1 | EA | | |
| | | | | **Total Base Bid Waterline** | |

## GILA COUNTY

# SURETY (BID) BOND

(Penalty of this bond must not be less than 10% of the bid amount)

**KNOW ALL MEN BY THESE PRESENTS,** that we, the undersigned _____,

as Principal, hereinafter called the Principal, and _____,

a corporation duly organized under the laws of the State of _____,

as Surety, hereinafter called the Surety, holding a certificate of authority to transact surety business in this State issued by the Director of the Department of Insurance, are held and firmly bound unto Gila County as Obligee, hereinafter called the Obligee, in the sum of ten percent (10%) of the amount bid, submitted by Principal to Gila County for the work described below, for the payment of which sum well and truly to be made, the said Principal and the said Surety bind ourselves, our heirs, executors, administrators, successors, and assigns, jointly and severally, firmly by these presents.

**WHEREAS,** the Principal is herewith submitting its proposal for:

**BID NO. 111311-1, PINE CREEK CANYON ROAD RECONSTRUCTION PROJECT, PINE**

**NOW THEREFORE,** if the Obligee, acting by and through its Public Works Director, accepts the proposal of the Principal and the Principal shall enter into contract with the Obligee in accordance with the terms of such proposal, and give such bonds and certificates of insurance as may be specified in the contract documents with good and sufficient surety for the faithful performance of such contract and for the prompt payment of labor and material furnished in the prosecution thereof, or in the event of the failure of the Principal to enter into such contract and give such bonds and certificates of insurance, if the Principal shall pay to the Obligee the difference not to exceed the penalty of the bond between the amount specified in the proposal and such larger amount for which the Obligee may in good faith contract with another party to perform the work covered by the proposal then this obligation is void. Otherwise, it remains in full force and effect provided, however, that this bond is executed pursuant to the provisions of ARS '34-201, and all liabilities on this bond shall be determined in accordance with the provisions of the section to the extent as if it were copied at length herein.

**IN WITNESS WHEREOF,** we hereunto set our hands and seals:

| | |
|---|---|
| **Principal** | **Surety** |
| **By** | **By Attorney-in-Fact** |
| **Title** | **Address, Attorney-in-Fact**<br>**Subscribed and sworn to before me**<br>**this ____ day of _____, 20____** |
| | **My commission expires: _____** |
| | **Notary Public** |

**GILA COUNTY**

**QUALIFICATION AND CERTIFICATION FORMS**

**Purpose**

This exhibit shall serve as a requirement to enable the evaluation team to assess the qualifications of Contractors under consideration for final award.

The information may or may not be a determining factor in award.

**Contract Number 111311-1 PINE CREEK CANYON ROAD RECONSTRUCTION PROJECT**

The applicant submitting this Bid warrants the following:

1. Name, Address, and Telephone Number of Principal Contractor:

   _____

   _____

   _____

2. Had Contractor (under its present or any previous name) ever failed to complete a contract?
   _____Yes _____No. If "Yes, give details, including the date, the contracting agency, and the reasons Contractor failed to perform in the narrative part of this Contract.

3. Has Contractor (under its present or any previous name) ever been disbarred or prohibited from competing for a contract? _____Yes _____No. If "Yes", give details, including the date, the contracting agency, the reasons for the Contractors disqualification, and whether this disqualification remains in effect in the narrative part of this Contract.

4. Has a contracting agency ever terminated a contract with Contractor prior to contract expiration date (under your firm's present or any previous name)? _____Yes _____No. If "Yes", give details including the date, the contracting agency, and the reasons Contractor was terminated in the narrative part of this Contract.

5. Contractor must also provide at least the following information:
   a. A brief history of the Contractors Firm.
   b. A Cost Proposal shall be submitted on the Price Sheet, attached hereon and made a full part of this contract by this reference.
   c. A list of previous and current customers, which are considered identical or similar to the Scope of Work described herein; shall be submitted on the Reference List, attached hereon and made a full part of this contract by this reference.

d. List of any subcontractors (if applicable) to be used in performing the service must accompany the Proposal. The subcontractors Arizona ROC, contact name and phone # must be included.

e. List the specific qualifications the Contractor has in supplying the specified services.

f. Gila County reserves the right to request additional information.

**6. Contractor Experience Modifier (e-mod) Rating in Arizona: _____**

A method the National Council on Compensation Insurance (NCCI) uses to measure a business' computed loss ratio and determine a factor, which when multiplied by premium, can reward policyholders with lower losses. E-mod rate may be a determining factor in bid award.

**7. Current Arizona Contractor License Number: _____**

_____

**Signature of Authorized Representative**

_____

**Printed Name**

_____

**Title**

**GILA COUNTY**

**REFERENCE LIST**

These references are required to enable the evaluation team to assess the qualifications of the Contractor under consideration for final award. The information may be a determining factor in award.

**References**

Please list a minimum of four (4) references for projects of similar size and scope as this Invitation for Bids during the past twelve (12) months, in or as close to Gila County as possible.

1. **Company:** _____

   Contact: _____

   Phone: _____

   Address: _____

2. **Company:** _____

   Contact: _____

   Phone: _____

   Address: _____

3. **Company:** _____

   Contact: _____

   Phone: _____

   Address: _____

4. **Company:** _____

   Contact: _____

   Phone: _____

   Address: _____

_____

**Name of Business**

_____

**Signature of Authorized Representative**

_____

**Title**

# AFFIDAVIT BY CONTRACTOR

**CERTIFYING THAT THERE WAS NO COLLUSION**
**IN BIDDING FOR CONTRACT**

STATE OF ARIZONA )
)ss
COUNTY OF: )

_____
(Name of Individual)
being first duly sworn, deposes and says:

That he is _____
(Title)
of_____ and
(Name of Business)

That he is properly prequalified by Gila County for bidding on **BID NO. 111311-1 PINE CREEK CANYON ROAD RECONSTRUCTION PROJECT, PINE, ARIZONA** and,

That pursuant to Section 112 (C) of Title 23 USC, he certifies as follows:

That neither he nor anyone associated with the said _____

_____
(Name of Business)

has, directly or indirectly entered into any agreement, participated in any collusion or otherwise taken any action in restraint of free competitive bidding in connection with the above mentioned project.

_____
**Name of Business**

_____
**By**

_____
**Title**

**Subscribed and sworn to before me this _____ day of _____, 20_____.**

_____ **My Commission expires:**
**Notary Public**

**GILA COUNTY**
**CERTIFICATION: INTENTIONS CONCERNING SUBCONTRACTING**

At the time of the submission of bids for **BID NO. 111311-1 PINE CREEK CANYON ROAD RECONSTRUCTION PROJECT, PINE, ARIZONA**, my intention concerning subcontracting a portion of the work is as indicated below.

In indicating that it is my intention to subcontract a portion of the work, this will acknowledge that such subcontractors will be identified and approved by the Engineer prior to award of the contract; and that documentation, such as copies of letters, requests for quotations, quotations, etc., substantiating the actions taken and the responses to such actions is on file and available for review.

A list of any subcontractors (if applicable) to be used in performing the service must accompany the Bid. The list must include the subcontractors name, address, and phone number.

Any subcontractor not listed with the bid must be approved by the County prior to providing any work pursuant to this contract. Further, contractor warrants that all subcontractors will comply with all terms and conditions of this contract. The County reserves the right to terminate the contract if the contractor fails to comply with the provisions of this certification.

**Yes** ☐ it is my intention to subcontract a portion of the work.

**No** ☐ it is not my intention to subcontract a portion of the work.

_____
**Name of Business**

_____
**Signature of Authorized Representative**

_____
**Title**

## BIDDERS CHECKLIST

NOTICE IS HEREBY GIVEN that all Bid Documents shall be completed and/or executed and submitted with this bid. If bidder fails to complete and/or execute any portion of the Bid Documents, this bid will be determined to be "non-responsive" and rejected.

**CHECKLIST:**

| REQUIRED DOCUMENT | COMPLETED/EXECUTED |
|---|---|
| Proposal | _____ |
| Bidding Schedule | _____ |
| Surety (Bid) Bond | _____ |
| Qualification & Certification Form | _____ |
| Reference List | _____ |
| Affidavit of Non-Collusion | _____ |
| Subcontractor Certification | _____ |
| Contract | _____ |
| Bidders Checklist & Addenda Acknowledgment | _____ |

---

**ACKNOWLEDGMENT OF RECEIPT OF ADDENDA:**

| | #1 | #2 | #3 | #4 | #5 |
|---|---|---|---|---|---|
| Initials/ Date | _____ | _____ | _____ | _____ | _____ |

Signed and dated this _____ day of_____, 2012.

_____
CONTRACTOR:

_____
BY:

Each proposal shall be sealed in an envelope addressed to Gila County Engineering Services and bearing the following statement on the outside of the envelope: **Proposal to Construct: PINE CREEK CANYON ROAD RECONSTRUCTION PROJECT, Gila County Arizona, Bid No. 111311-1**. All proposals shall be filed at **Gila County Procurement, 1400 E. Ash St., Globe, AZ 85501**, on or before **Thursday, March 1st, 2012, 11:00 a.m.**

**GILA COUNTY**
**CONTRACT NO. 111311-1**

**THIS AGREEMENT**, made and entered into this _____ day of _____, **2012**, by and between Gila County, a political subdivision of the State of Arizona, party of the first part, hereinafter designated the **OWNER**, and _____ of the City of _____, County of _____, State of Arizona, party of the second part, hereinafter designated the **CONTRACTOR**.

**WITNESSETH**: That the said **Contractor**, for and in consideration of the sum to be paid him by the said **Owner**, in the manner and at the time hereinafter provided, and of the other covenants and agreements herein contained, and under the penalties expressed in the bond hereto attached, hereby agrees, for himself, his heirs, administrators, successors, and assigns as follows:

**ARTICLE I - SCOPE OF WORK**: The **Contractor** shall furnish any and all plant materials, labor, construction equipment, and services, required for performing all work for construction for **Bid No. 111311-1 PINE CREEK CANYON ROAD RECONSTRUCTION PROJECT**, **PINE, ARIZONA** in accordance with the plans and these specifications, and to completely and totally construct the same and install the material herein for the **Owner**, in a good and workmanlike and substantial manner and to the satisfaction of the **Owner** through its Engineers and under the direction and supervision of the Engineer, or his properly authorized agents and strictly pursuant to and in conformity with the Specifications prepared by the Engineers for the **Owner**, and with such modifications of the same and other documents that may be made by the **Owner** through the Engineer, or his properly authorized agents, as provided herein. Once the Bid has been awarded the bid number 032204-1 will become the Contract Number.

**ARTICLE II - CONTRACT DOCUMENTS**: The attached "Call for Bids", "Technical Specifications", "General Provisions", "Special Provisions", "Proposal", "Bidding Schedule", "Bid Bond", "Qualification & Certification Forms", "Reference List", "Affidavit of Non-Collusion", "Subcontractor Certification", "Employment Laws Acknowledgment", "Checklist & Addenda Acknowledgment", "Performance Bond", "Labor and Materials Bond", "Contract Performance Bond", and Plans thereto, if any, are by this reference made a part of this Contract to the same extent as if set forth herein in full. In the event of any conflict or any inconsistency in the documents, controlling weight shall be assigned in the following order: the Contract; the Technical Specifications; the Special Provisions; the General Provisions; all other documents. Contract is considered invalid unless signed by the Gila County Board of Supervisors.

**ARTICLE III – SAFETY AND LOSS CONTROL:** The Gila County Safety and Loss Control booklet must be read and signed by all working at the job site.

During the pre-construction meeting a time will be set for the Gila County QA/QC Safety Compliance Officer for a safety meeting. For every safety meeting the Contractor shall invite the QA/QC Safety Compliance Officer and shall give at least a twenty-four (24) hour notice.

**ARTICLE IV – INDEMNIFICATION CLAUSE:** The Contractor agrees to indemnify and save harmless the County of Gila, its officers, agents and employees, and any jurisdiction or agency issuing permits for any work included in the project, their officers, agents and employees, hereinafter referred to as indemnitee, from all suits and claims, including attorney's fees and cost of litigation, actions, loss, damage, expense, cost or claims of any character or any nature arising out of the work done in fulfillment of the terms of this Contract or on account of any act, claim or amount arising or recovered under workers' compensation law or arising out of the failure of the Contractor to conform to any statutes, ordinances, regulation, law or court decree. It is agreed that the Contractor will be responsible for primary loss investigation, defense and judgment costs where this contract of indemnity applies. In consideration of the award of this contract, the Contractor agrees to waive all rights of subrogation against the County, its officers, officials, agents and employees for losses arising from the work performed by the Contractor for the County.

**ARTICLE V – INSURANCE REQUIREMENTS:** Contractor and subcontractors shall procure and maintain until all of their obligations have been discharged, including any warranty periods under this Contract are satisfied, insurance against claims for injury to persons or damage to property which may arise from or in connection with the performance of the work hereunder by the Contractor, his agents, representatives, employees or subcontractors.

The insurance requirements herein are minimum requirements for this Contract and in no way limit the indemnity covenants contained in this Contract.

The County in no way warrants that the minimum limits contained herein are sufficient to protect the Contractor from liabilities that might arise out of the performance of the work under this Contract by the Contractor, his agents, representatives, employees, or subcontractors. Contractor is free to purchase such additional insurance as may be determined necessary.

A. **MINIMUM SCOPE AND LIMITS OF INSURANCE** - Contractor shall provide coverage with limits of liability not less than those stated below:

1. **Commercial General Liability – Occurrence Form**
   Policy shall include bodily injury, property damage, broad form contractual liability and XCU coverage.
   - General Aggregate $2,000,000
   - Products – Completed Operations Aggregate $1,000,000
   - Personal and Advertising Injury $1,000,000
   - Each Occurrence $1,000,000

   a. The policy shall be endorsed to include the following additional insured language: **"The County of Gila shall be named as an additional insured with respect to**

**liability arising out of the activities performed by, or on behalf of the Contractor".**

2. **Automobile Liability**
   Bodily injury and property damage for any owned, hired, and non-owned vehicles used in the performance of this Contract.

   | | |
   |---|---|
   | Combined Single Limit (CSL) | $1,000,000 |

   a. The policy shall be endorsed to include the following additional insured language: **"The County of Gila shall be named as an additional insured with respect to liability arising out of the activities performed by, or on behalf of the Contractor, including automobiles owned, leased, hired or borrowed by the Contractor".**

3. **Worker's Compensation and Employers' Liability**

   | | |
   |---|---|
   | Workers' Compensation | Statutory |
   | Employers' Liability | |
   | Each Accident | $100,000 |
   | Disease – Each Employee | $100,000 |
   | Disease – Policy Limit | $500,000 |

   a. Policy shall contain a **waiver of subrogation** against the County of Gila.

B. **ADDITIONAL INSURANCE REQUIREMENTS:** The policies shall include, or be endorsed to include, the following provisions:

1. On insurance policies where the County of Gila is named as an additional insured, the County of Gila shall be an additional insured to the full limits of liability purchased by the Contractor even if those limits of liability are in excess of those required by this Contract.
2. The Contractor's insurance coverage shall be primary insurance and non-contributory with respect to all other available sources.
3. Coverage provided by the Contractor shall not be limited to the liability assumed under the indemnification provisions of this Contract.

C. **NOTICE OF CANCELLATION:** Each insurance policy required by the insurance provisions of this Contract shall provide the required coverage and shall not be suspended, voided, canceled, reduced in coverage or endorsed to lower limits except after thirty (30) days prior written notice has been given to the County. Such notice shall be sent directly to the **Gila County Purchasing Department, 1400 E. Ash St., Globe, AZ 85501** and shall be sent by certified mail, return receipt requested.

D. **ACCEPTABILITY OF INSURERS:** Insurance is to be placed with insurers duly licensed or approved unlicensed companies in the state of Arizona and with an "A.M. Best" rating of not less than B+ VI. The County in no way warrants that the above-required minimum insurer rating is sufficient to protect the Contractor from potential insurer insolvency.

E. **VERIFICATION OF COVERAGE:** Contractor shall furnish the County with certificates of insurance (ACORD form or equivalent approved by the County) as required by this Contract.

The certificates for each insurance policy are to be signed by a person authorized by that insurer to bind coverage on its behalf.

All certificates and endorsements are to be received and approved by the County before work commences. Each insurance policy required by this Contract must be in effect at or prior to commencement of work under this Contract and remain in effect for the duration of the project. Failure to maintain the insurance policies as required by this Contract or to provide evidence of renewal is a material breach of contract.

All certificates required by this Contract shall be sent directly to the **Gila County Purchasing Department, 1400 E. Ash St., Globe, AZ 85501**. The County project/contract number and project description shall be noted on the certificate of insurance. The County reserves the right to require complete, certified copies of all insurance policies required by this Contract at any time**.**

F. **SUBCONTRACTORS:** Contractors' certificate(s) shall include all subcontractors as additional insureds under its policies **or** Contractor shall furnish to the County separate certificates and endorsements for each subcontractor. All coverage's for subcontractors shall be subject to the minimum requirements identified above.

G. **APPROVAL:** Any modification or variation from the insurance requirements in this Contract shall be made by the County Attorney, whose decision shall be final. Such action will not require a formal Contract amendment, but may be made by administrative action.

**ARTICLE VI - TIME OF COMPLETION**: The Contractor further covenants and agrees, at his own proper cost and expense, to do all work and furnish all materials, labor, construction equipment, and services for performing all of the work for construction of said improvements and to completely construct the same and install the material therein, as called for by this agreement free and clear of all claims, liens, and charges whatsoever, in the manner and under the conditions specified within the time, or times, stated in the Proposal.

Work on this project shall start within **no later than ten (10) Days of the Notice To Proceed,** and shall be completed within the following limits:

**SCHEDULE:**

For construction in the contract documents, the project shall be completed within **One Hundred and Eighty (180) Days of the Notice To Proceed**.

It is expressly understood and agreed that in case of failure on the part of the Contractor, for any reason, except with the written consent of the Engineer, to complete the work to the satisfaction of the Engineer and within the aforesaid time limits, the Owner may deduct from any money due, or which may become due the Contractor, as liquidated damages, an amount as fixed by the following schedule:

| WORK ITEM | DAILY CHARGE PER CALENDAR DAY |
| --- | --- |
| All work not complete within the above specified time after start of work. | **$1,300.00** |

If no money shall be due the Contractor, the Owner shall have a cause of action to recover against the Contractor in a court of competent jurisdiction, liquidated damages as fixed by the above schedule; said deduction to be made, or said sum to be recovered, not as a penalty, but as liquidated damages; provided, however, that upon receipt of written notice from the Contractor, of the existence of causes, as herein provided, over which said Contractor has no control and which must delay the completion of the said work or any delay occasioned by the Owner, the Engineer may extend the period hereinafter specified for the completion of said work in accordance with the specifications and in such case, the Contractor shall become liable for said liquidated damages for delays commencing from date said extension period shall expire.

**ARTICLE VII - CANCELLATION**: This agreement is subject to cancellation pursuant to **A.R.S. §38-511** and **GENERAL PROVISION 80-09 DEFAULT AND TERMINATION OF CONTRACT.**

**ARTICLE VIII - PAYMENTS**: The Contractor shall make an estimate of the work performed during the preceding month and submit the same to the Engineer for checking. On or before ***thirty (30) days*** after the certified and approved estimate of the work is received by the Owner, the Owner shall pay to the Contractor ninety percent (90%) of the value of said work in place, as approved by the Engineer. The balance of ten percent (10%) of the estimate shall be retained by the Owner until the time of final payment and acceptance of said work, as per **A.R.S. §34-221(A)(2).**

In order to receive payment the Contractor shall have a current W-9 Form on file with the County unless required by law.

All invoices submitted by the Contractor shall include at least the following but not be limited to:

- Purchase Order Number
- Contract Number
- Project Title
- Invoice Number
- Vendor Name and Address
- Description of Service

**ARTICLE IX – LAWS AND ORDINANCES:** This agreement shall be enforced under the laws of the State of Arizona. The Contractor shall maintain in current status all Federal, State, and Local licenses and permits required for the operation of the business conducted by the Contractor.

The **Contractor** shall comply with the applicable provisions of the Americans with Disabilities Act **(Public Law 101-336, 42 U.S.C. 12101-12213)** and applicable Federal regulations under the Act.

**ARTICLE X – LEGAL ARIZONA WORKERS ACT COMPLIANCE:** Contractor hereby warrants that it will at all times during the term of this Contract comply with all federal immigration laws applicable to Contractor's employment of its employees, and with the requirements of A.R.S. § 23-214 (A) (together the "State and Federal Immigration Laws"). Contractor shall further ensure that each subcontractor who performs any work for Contractor under this contract likewise complies with the State and Federal Immigration Laws.

County shall have the right at any time to inspect the books and records of Contractor and any subcontractor in order to verify such party's compliance with the State and Federal Immigration Laws.

Any breach of Contractor's or any subcontractor's warranty of compliance with the State and Federal Immigration Laws, or of any other provision of this section, shall be deemed to be a material breach of this Contract subjecting Contractor to penalties up to and including suspension or termination of this Contract. If the breach is by a subcontractor, and the subcontract is suspended or terminated as a result, Contractor shall be required to take such steps as may be necessary to either self-perform the services that would have been provided under the subcontract or retain a replacement subcontractor as soon as possible so as not to delay project completion.

Contractor shall advise each subcontractor of County's rights, and the subcontractor's obligations, under this Article by including a provision in each subcontract substantially in the following form:

"Subcontractor hereby warrants that it will at all times during the term of this contract comply with all federal immigration laws applicable to Subcontractor's employees, and with the requirements of A.R.S. §23-214 (A). Subcontractor further agrees that County may inspect the Subcontractor's books and records to insure that Subcontractor is in compliance with these requirements. Any breach of this paragraph by Subcontractor will be deemed to be a material breach of this contract subjecting Subcontractor to penalties up to and including suspension or termination of this contract."

Any additional costs attributable directly or indirectly to remedial action under this Article shall be the responsibility of Contractor. In the event that remedial action under this Article results in delay to one or more tasks on the critical path of Contractor's approved construction or critical milestones schedule, such period of delay shall be deemed excusable delay for which Contractor shall be entitled to an extension of time, but not costs.

**ARTICLE XI – ANTI-TERRORISM WARRANTY:** Pursuant to A.R.S. § 35-393.06(B) and 35-301.06(A) the Contractor certifies that it does not have scrutinized business operations in Iran or Sudan and that they are in compliance with the Export Administration Act and not on the Excluded Parties List.

**IN WITNESS WHEREOF**, three (3) identical counterparts of this contract, each of which shall for all purposes be deemed an original thereof, have been duly executed by the parties hereinabove named, on the date and year first above written.

In return for the performance of this Contract by the **Contractor**, the **Owner** agrees to pay the amount of _$_____ **INCLUDING ALL APPLICABLE TAXES** through a payment schedule as described in the Contract documents and as may be modified and executed by change orders and by final quantities.

The **Contractor** agrees that this contract, as awarded, is for the following work, and understands that payment for the total work will be made on the basis of the indicated amount(s), as bid in the Proposal and attached Bidding Schedule for:

**PINE CREEK CANYON ROAD RECONSTRUCTION PROJECT**
**BID NO. 111311-1**

**OWNER:**

**GILA COUNTY BOARD OF SUPERVISORS**

_____
**Tommie C. Martin, Chairman, Board of Supervisors**

**ATTEST:**

_____
**Marian Sheppard, Chief Deputy Clerk of the Board**

**APPROVED AS TO FORM:**

_____
**Brian B. Chambers, Chief Deputy County Attorney**
***for* Daisy Flores, County Attorney**

**CONTRACTOR:**

_____
**Contractor Signature**

_____
**Print Name**

_____
**Witness (If Contractor is Individual)**

## STATUTORY PERFORMANCE BOND

# PURSUANT TO TITLE 34, CHAPTER 2, ARTICLE 2 OF THE ARIZONA REVISED STATUTES

(PENALTY OF THIS BOND MUST BE 100% OF CONTRACT AMOUNT)

**KNOW ALL MEN BY THESE PRESENTS:**

That, _____

_____, (hereinafter called the Principal), as Principal,

and _____
(hereinafter called Surety), a corporation duly organized and existing the laws of the State of

_____ with its principal office in the city of _____ holding a certificate of authority to transact surety business in Arizona issued by the Director of the Department of Insurance, as Surety, are held and firmly bound unto Gila County (hereinafter called the Obligee) in the amount of (100% OF CONTRACT AMOUNT)_____ dollars ($_____), for the payment whereof, the said Principal and Surety bind themselves, and their heirs, administrator, executors, successors, and assigns, jointly and severally, firmly by these presents.

**WHEREAS**, the Principal has agreed to enter into a certain contract with the Obligee for: **PINE CREEK CANYON ROAD RECONSTRUCTION PROJECT, PINE, ARIZONA,** which contract is hereby referred to and made a part hereof as fully and to the same extent as if copied at length herein.

**NOW, THEREFORE, THE CONDITION OF THIS OBLIGATION IS SUCH**, that if the said Principal shall faithfully perform and fulfill all the undertakings, covenants, terms, conditions and agreements of said contract during the original term of said contract and any extension thereof, with or without notice to the Surety, and during the life of any guaranty required under the contract, and shall also perform and fulfill all the undertakings, covenants, terms, conditions, and agreements of any and all duly authorized modifications of said contract that may hereafter be made, notice of which modifications to the Surety being hereby waived; then the above obligation shall be void, otherwise to remain in full force and effect;

**PROVIDED, HOWEVER**, that this bond is executed pursuant to the provisions of Title 34, Chapter 2, Article 2, of the Arizona Revised Statutes, and all liabilities on this bond shall be determined in accordance with the provisions of said Title, Chapter and Article, so the extent as if they were copied at length herein.

The prevailing party in a suit on this bond shall recover as a part of the judgment such reasonable attorneys' fees as may be fixed by a judge of the court.

**Witness our hands this _____ day of _____, 20 _____.**

_____
**Principal** **Seal**

_____
**Surety** **Seal**

_____
**Agency of Record**

_____
**Arizona Countersignature**

_____
**Address**

_____
**Phone Number**

_____
**By:**

_____
**By:**

_____
**Agency Address**

## STATUTORY LABOR AND MATERIALS BOND

# PURSANT TO TITLE 34, CHAPTER 2, ARTICLE 2 OF THE ARIZONA REVISED STATUTES

(PENALTY OF THIS BOND MUST BE 100% OF CONTRACT AMOUNT)

**KNOW ALL MEN BY THESE PRESENTS:**

That,

_____

_____, (hereinafter called the Principal), as Principal, and

_____

(hereinafter called Surety), a corporation duly organized and existing the laws of the State of

_____ with its principal office in the city of _____ holding a certificate of authority to transact surety business in Arizona issued by the Director of the Department of Insurance, as Surety, are held and firmly bound unto Gila County (hereinafter called the Obligee) in the amount of (100% of Contract Amount)_____ dollars ($_____), for the payment whereof, the said Principal and Surety bind themselves, and their heirs, administrator, executors, successors, and assigns, jointly and severally, firmly by these presents.

**WHEREAS**, the Principal has agreed to enter into a certain contract with the Obligee for: **PINE CREEK CANYON ROAD RECONSTRUCTION PROJECT, PINE, ARIZONA,** which contract is hereby referred to and made a part hereof as fully and to the same extent as if copied at length herein.

**NOW, THEREFORE, THE CONDITION OF THIS OBLIGATION IS SUCH**, that if the said Principal shall faithfully perform and fulfill all the undertakings, covenants, terms, conditions and agreements of said contract during the original term of said contract and any extension thereof, with or without notice to the Surety, and during the life of any guaranty required under the contract, and shall also perform and fulfill all the undertakings, covenants, terms, conditions, and agreements of any and all duly authorized modifications of said contract that may hereafter be made, notice of which modifications to the Surety being hereby waived; then the above obligation shall be void, otherwise to remain in full force and effect;

**PROVIDED, HOWEVER**, that this bond is executed pursuant to the provisions of Title 34, Chapter 2, Article 2, of the Arizona Revised Statutes, and all liabilities on this bond shall be determined in accordance with the provisions of said Title, Chapter and Article, so the extent as if they were copied at length herein.

The prevailing party in a suit on this bond shall recover as a part of the judgment such reasonable attorneys' fees as may be fixed by a judge of the court.

**Witness our hands this _____ day of _____, 20 _____**

| | |
|---|---|
| _____ | _____ |
| **Principal** **Seal** | **By:** |
| _____ | _____ |
| **Surety** **Seal** | **By:** |
| _____ | _____ |
| **Agency of Record** | **Agency Address** |
| _____ | |
| **Arizona Countersignature** | |
| _____ | |
| **Address** | |
| _____ | |
| **Phone Number** | |

**GILA COUNTY**
**CONTRACT PERFORMANCE WARRANTY**

I, _____, representing

_____ (company name)

do hereby warranty the work performed for the:

**PINE CREEK CANYON ROAD RECONSTRUCTION PROJECT, PINE, ARIZONA,**

for a period of **two (2) years** from completion of said work.

Said work shall be free from defects which would cause the work not to perform in it's intended manner.

_____

**(Officer, Partner, Owner)** **Date**

Form **W-9**
(Rev. October 2007)
Department of the Treasury
Internal Revenue Service

# Request for Taxpayer Identification Number and Certification

**Give form to the requester. Do not send to the IRS.**

**Print or type**
See **Specific Instructions** on page 2.

Name (as shown on your income tax return)

Business name, if different from above

Check appropriate box: ☐ Individual/Sole proprietor ☐ Corporation ☐ Partnership
☐ Limited liability company. Enter the tax classification (D=disregarded entity, C=corporation, P=partnership) ▶
☐ Other (see instructions) ▶

☐ Exempt payee

Address (number, street, and apt. or suite no.)

Requester's name and address (optional)

City, state, and ZIP code

List account number(s) here (optional)

## Part I Taxpayer Identification Number (TIN)

Enter your TIN in the appropriate box. The TIN provided must match the name given on Line 1 to avoid backup withholding. For individuals, this is your social security number (SSN). However, for a resident alien, sole proprietor, or disregarded entity, see the Part I instructions on page 3. For other entities, it is your employer identification number (EIN). If you do not have a number, see *How to get a TIN* on page 3.

**Note.** If the account is in more than one name, see the chart on page 4 for guidelines on whose number to enter.

**Social security number**

**or**

**Employer identification number**

## Part II Certification

Under penalties of perjury, I certify that:

1. The number shown on this form is my correct taxpayer identification number (or I am waiting for a number to be issued to me), and
2. I am not subject to backup withholding because: (a) I am exempt from backup withholding, or (b) I have not been notified by the Internal Revenue Service (IRS) that I am subject to backup withholding as a result of a failure to report all interest or dividends, or (c) the IRS has notified me that I am no longer subject to backup withholding, and
3. I am a U.S. citizen or other U.S. person (defined below).

**Certification instructions.** You must cross out item 2 above if you have been notified by the IRS that you are currently subject to backup withholding because you have failed to report all interest and dividends on your tax return. For real estate transactions, item 2 does not apply. For mortgage interest paid, acquisition or abandonment of secured property, cancellation of debt, contributions to an individual retirement arrangement (IRA), and generally, payments other than interest and dividends, you are not required to sign the Certification, but you must provide your correct TIN. See the instructions on page 4.

**Sign Here** **Signature of U.S. person ▶** **Date ▶**

## General Instructions

Section references are to the Internal Revenue Code unless otherwise noted.

## Purpose of Form

A person who is required to file an information return with the IRS must obtain your correct taxpayer identification number (TIN) to report, for example, income paid to you, real estate transactions, mortgage interest you paid, acquisition or abandonment of secured property, cancellation of debt, or contributions you made to an IRA.

Use Form W-9 only if you are a U.S. person (including a resident alien), to provide your correct TIN to the person requesting it (the requester) and, when applicable, to:

1. Certify that the TIN you are giving is correct (or you are waiting for a number to be issued),

2. Certify that you are not subject to backup withholding, or

3. Claim exemption from backup withholding if you are a U.S. exempt payee. If applicable, you are also certifying that as a U.S. person, your allocable share of any partnership income from a U.S. trade or business is not subject to the withholding tax on foreign partners' share of effectively connected income.

**Note.** If a requester gives you a form other than Form W-9 to request your TIN, you must use the requester's form if it is substantially similar to this Form W-9.

**Definition of a U.S. person.** For federal tax purposes, you are considered a U.S. person if you are:

- An individual who is a U.S. citizen or U.S. resident alien,
- A partnership, corporation, company, or association created or organized in the United States or under the laws of the United States,
- An estate (other than a foreign estate), or
- A domestic trust (as defined in Regulations section 301.7701-7).

**Special rules for partnerships.** Partnerships that conduct a trade or business in the United States are generally required to pay a withholding tax on any foreign partners' share of income from such business. Further, in certain cases where a Form W-9 has not been received, a partnership is required to presume that a partner is a foreign person, and pay the withholding tax. Therefore, if you are a U.S. person that is a partner in a partnership conducting a trade or business in the United States, provide Form W-9 to the partnership to establish your U.S. status and avoid withholding on your share of partnership income.

The person who gives Form W-9 to the partnership for purposes of establishing its U.S. status and avoiding withholding on its allocable share of net income from the partnership conducting a trade or business in the United States is in the following cases:

- The U.S. owner of a disregarded entity and not the entity,

# SECTION VI

## NOTED STANDARD DETAIL DRAWINGS

## NOTES:

1. TYPE 'A' TO BE USED AT INTERSECTIONS OF MAJOR STREETS & COLLECTOR STREETS, AND AT OTHER SPECIAL PONTS IF REQUIRED BY ENGINEER, AS SHOWN ON PLANS.
2. TYPE 'B' TO BE USED AT INTERSECTION OF STREET CENTERLINES (EXCEPT WHERE TYPE 'A' IS SPECIFIED), CORNERS OR CHANGES IN ALIGNMENT OF SUBDIVISION BOUNDARIES (WHEN THEY FALL IN PAVEMENT), P.C.'S AND P.T.'S OF CURVES. WHEN P.I. FALLS IN PAVEMENT, THEN THE P.I. SHALL BE MONUMENTED.
3. TYPE 'C' TO BE USED AT CORNERS OF, AND CHANGE IN ALIGNMENT OF, SUBDIVISION BOUNDARIES WHERE CORNERS OR CHANGE POINTS FALL OUTSIDE OF PAVED AREAS OR IN ALLEYS.
4. LETTERS TO BE APPROX. 1/32" WIDE & 1/32" DEEP.
5. USE STANDARD WROUGHT IRON WASHER 3" O.D. x 11/64" THICK WITH 1-3/8" HOLE
6. CAP TO BE CONSTRUCTED OF RED BRASS OR BRONZE.
7. FRAME & COVER TO INCLUDE CHAIN PER DET. 270. (OPTIONAL PER AGENCY REQUIREMENTS.)

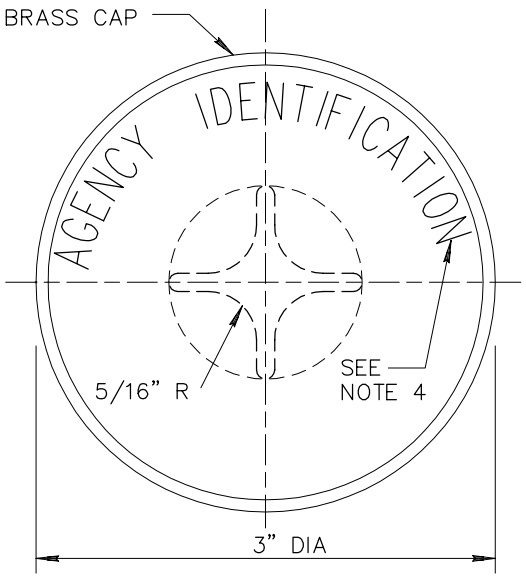


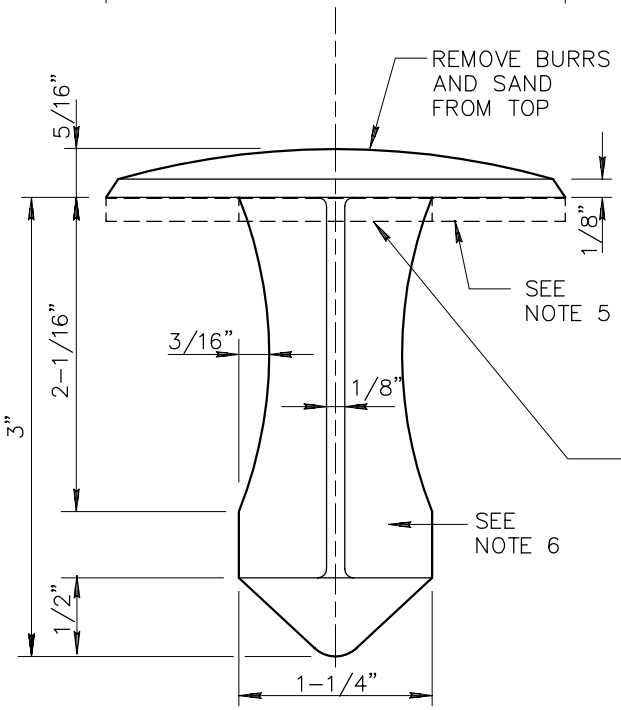


CAP DETAIL

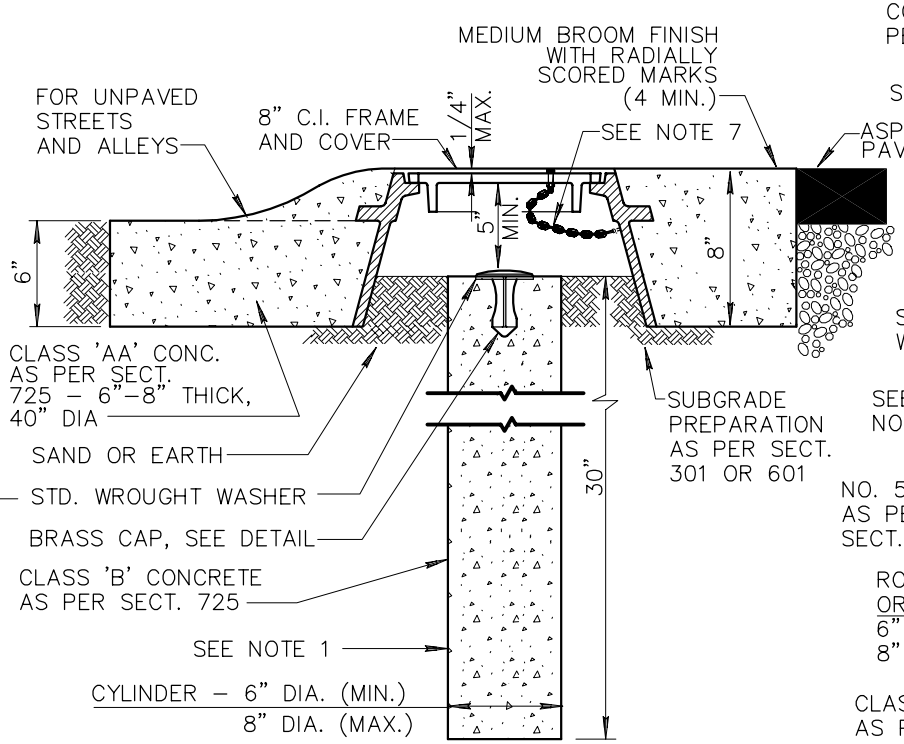


TYPE 'A'
(WITH FRAME PER DETAIL 270)

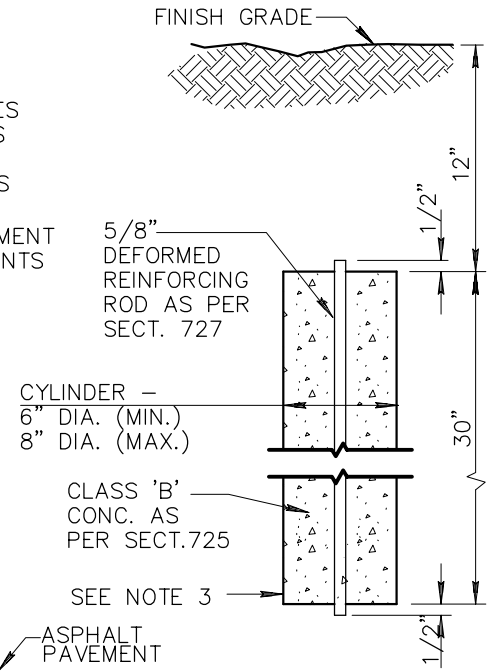


TYPE 'C'

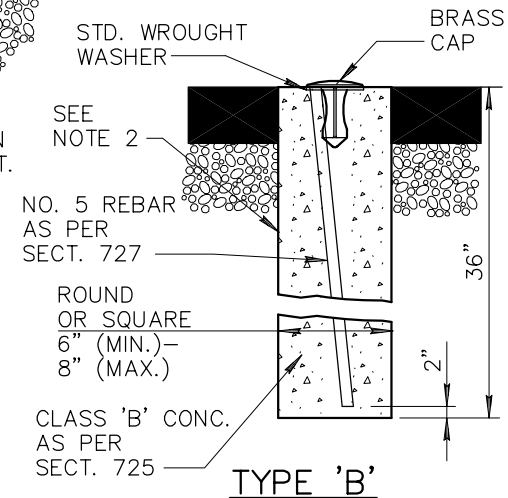


TYPE 'B'
(WITHOUT FRAME)

| DETAIL NO. | | | | REVISED | DETAIL NO. |
|---|---|---|---|---|---|
| 120-1 | MARICOPA ASSOCIATION of GOVERNMENTS | STANDARD DETAIL ENGLISH | SURVEY MARKER | 01-01-2001 | 120-1 |

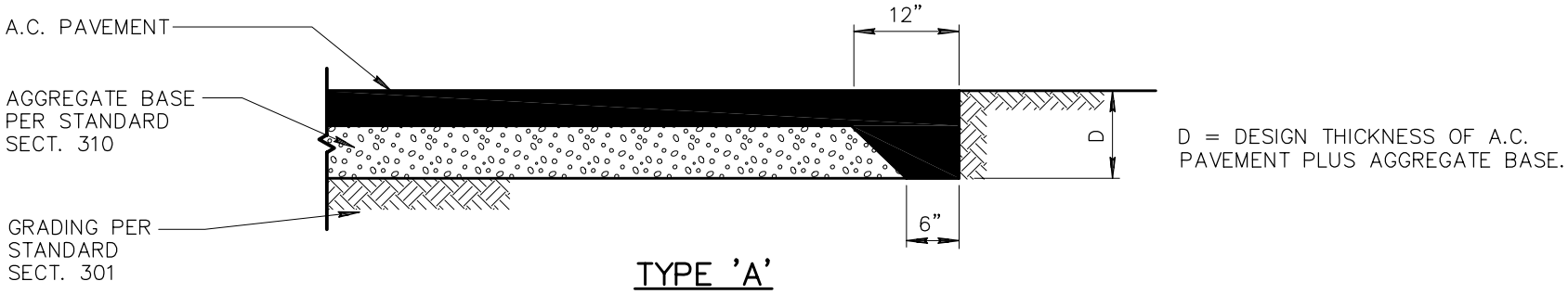


TYPE 'A'

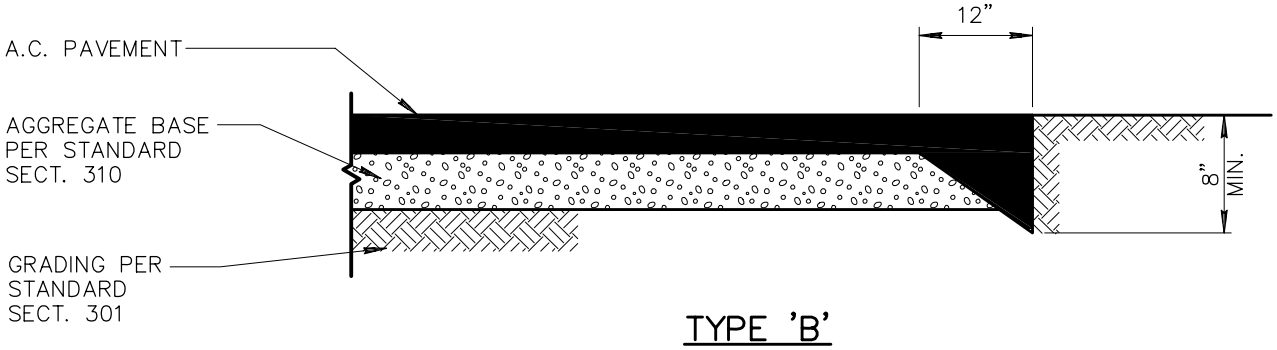


TYPE 'B'

| DETAIL NO. | | | | REVISED | DETAIL NO. |
|---|---|---|---|---|---|
| 201 | MARICOPA ASSOCIATION of GOVERNMENTS | STANDARD DETAIL ENGLISH | PAVEMENT SECTION AT TERMINATION | 01-01-2008 | 201 |

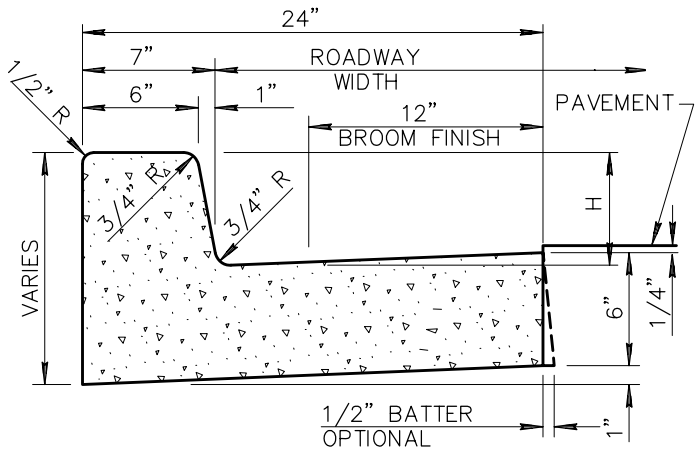


## VERTICAL CURB AND GUTTER (TYPE A)

## NOTES: (TYPE A)

1. ALL EXPOSED SURFACES TO BE TROWEL FINISHED EXCEPT AS SHOWN. SEE SECT. 340.
2. H=6" OR AS SPECIFIED ON PLANS.
3. CONTRACTION JOINT SPACING 10' MAXIMUM.
4. EXPANSION JOINTS AS PER SECT. 340.
5. CLASS 'B' CONCRETE PER 725.
6. WHEN THE ADJACENT PAVEMENT SECTION SLOPES AWAY FROM THE GUTTER, THE SLOPE OF THE GUTTER PAN SHALL MATCH PAVEMENT CROSS SLOPE.

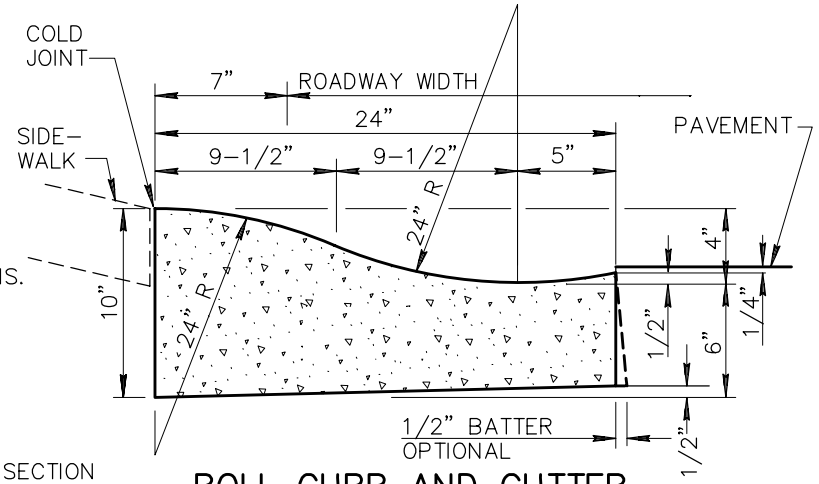


## ROLL CURB AND GUTTER (TYPE C)

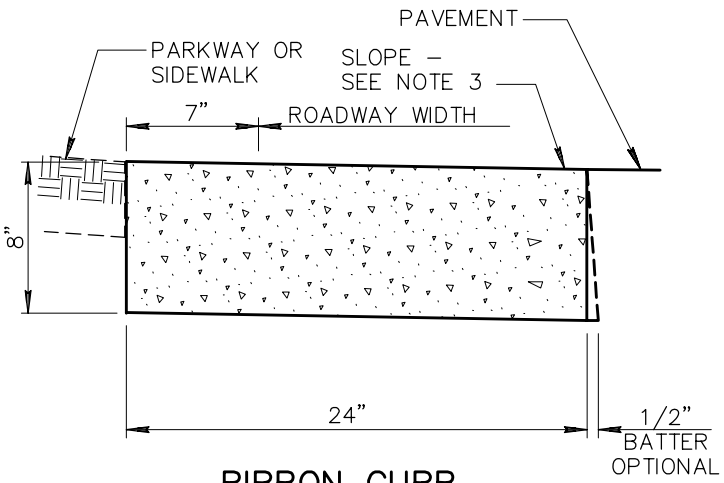


## RIBBON CURB (TYPE B)

## NOTES: (TYPE B)

1. CONSTRUCT CURB AND INSTALL 1/2" MASTIC EXPANSION JOINTS, A.S.T.M. D-1751. SECT. 340.
2. BROOM FINISH ALL SURFACES.
3. RIBBON CURB MAY SLOPE TOWARDS PAVEMENT OR PARKWAY AS INDICATED ON PLANS.
4. CONTRACTION JOINT SPACING 10' MAXIMUM.
5. CONCRETE SHALL BE CLASS 'B' PER SECT. 725 AND INSTALLED PER SECT. 505.

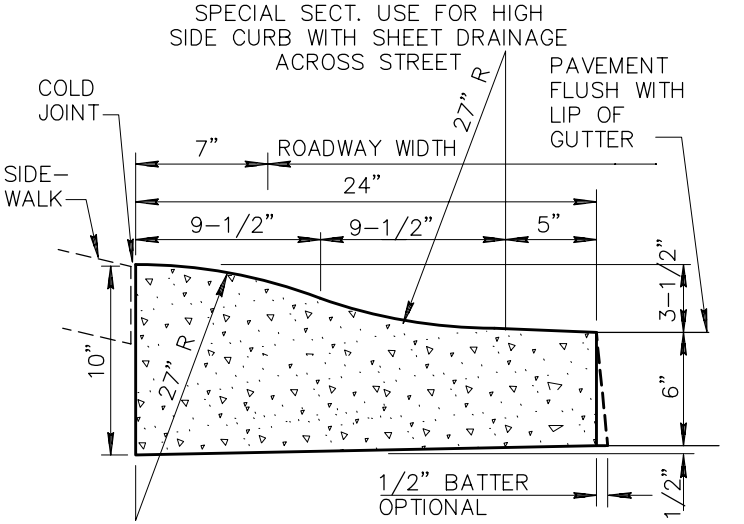


## (TYPE D)

## NOTES: (C & D)

1. ALL WORK AND MATERIALS SHALL CONFORM TO SECT. 304, 505 AND 725. BROOM FINISH TO EXPOSED SURFACE.
2. CONTRACTION JOINT SPACING 10' MAXIMUM.
3. EXPANSION JOINTS AS PER SECT. 340.
4. CLASS 'B' CONCRETE PER 725.

| DETAIL NO. | | | | REVISED | DETAIL NO. |
|---|---|---|---|---|---|
| 220-1 | MARICOPA ASSOCIATION of GOVERNMENTS | STANDARD DETAIL ENGLISH | CURB AND GUTTER TYPES A, B, C AND D | 01-01-2007 | 220-1 |

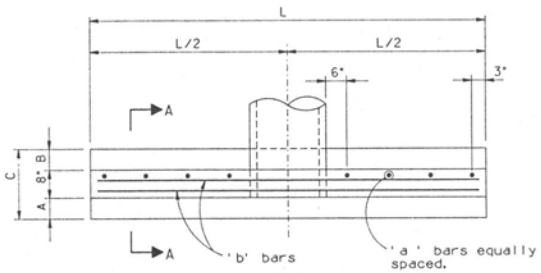


PLAN

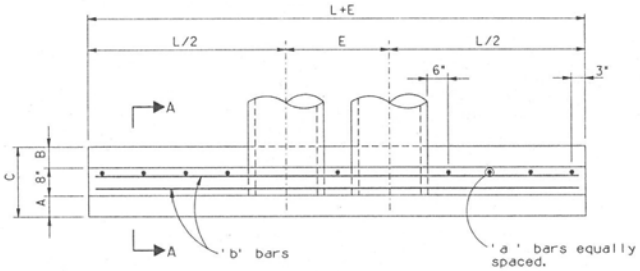


PLAN

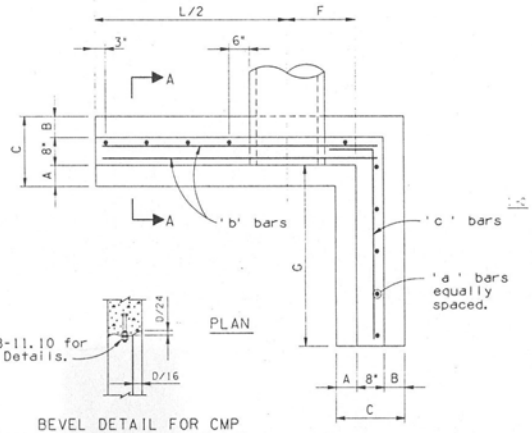


PLAN

BEVEL DETAIL FOR CMP

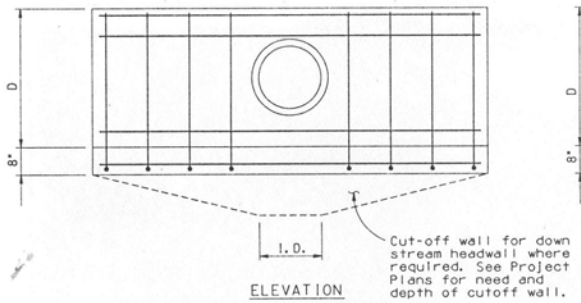


ELEVATION

SINGLE PIPE HEADWALL

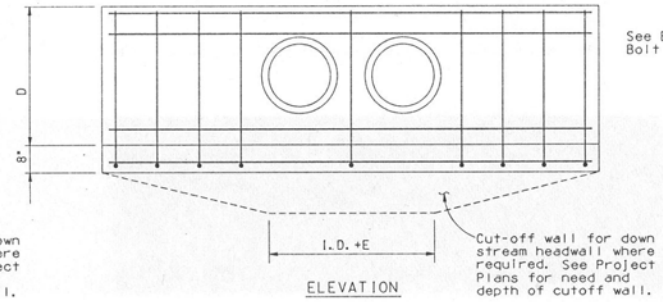


ELEVATION

DOUBLE PIPE HEADWALL

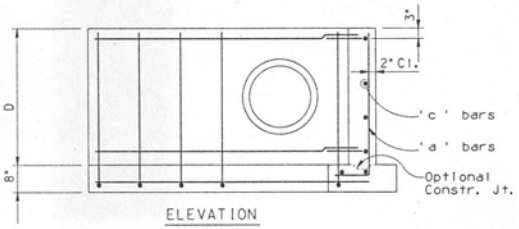


ELEVATION

'L' HEADWALL

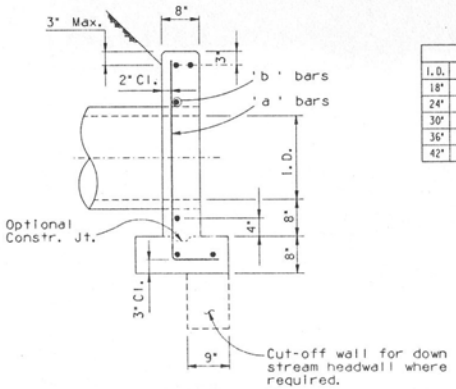


SECTION A-A

| Dimensions | | | | | | | | | |
|---|---|---|---|---|---|---|---|---|---|
| I.D. | A | B | C | D | E | F | G | L | L+E |
| 18" | 6" | 10" | 2'-0 | 3'-2 | 2'-6 | 1'-7 | 4'-6 | 9'-6 | 12'-0 |
| 24" | 8" | 1'-0 | 2'-4 | 3'-8 | 3'-0 | 2'-1 | 5'-6 | 11'-6 | 14'-6 |
| 30" | 10" | 1'-2 | 2'-8 | 4'-2 | 3'-9 | 2'-7 | 6'-6 | 13'-6 | 17'-3 |
| 36" | 1'-0 | 1'-4 | 3'-0 | 4'-8 | 4'-6 | 3'-1 | 7'-6 | 15'-6 | 20'-0 |
| 42" | 1'-2 | 1'-6 | 3'-4 | 5'-2 | 5'-3 | 3'-7 | 8'-6 | 17'-6 | 22'-9 |

| * Approximate Quantities | | | | | | | | | |
|---|---|---|---|---|---|---|---|---|---|
| I.D. | Single Pipe Hdwall. | | Double Pipe Hdwall. | | Add'l. Pipe Hdwall. | | 'L' Hdwall. | | |
| | Conc. C.Y. | Reinf. Lbs. | Conc. C.Y. | Reinf. Lbs. | Conc. C.Y. | Reinf. Lbs. | Conc. C.Y. | Reinf. Lbs. | |
| 18" | 1.2 | 60 | 1.4 | 73 | .3 | 13 | 1.4 | 75 | |
| 24" | 1.6 | 78 | 2.0 | 90 | .4 | 15 | 2.0 | 100 | |
| 30" | 2.1 | 97 | 2.6 | 116 | .5 | 19 | 2.6 | 121 | |
| 36" | 2.7 | 111 | 3.4 | 133 | .7 | 22 | 3.4 | 152 | |
| 42" | 3.4 | 135 | 3.7 | 160 | .8 | 26 | 4.2 | 180 | |

*Quantities do not include cut-off wall.

| Reinforcing | | | | | | | | | | | | | | |
|---|---|---|---|---|---|---|---|---|---|---|---|---|---|---|
| I.D. | 'a' bars | | | | | | 'b' bars | | | | | | 'c' bars | |
| | Single Pipe Headwall | | Double Pipe Headwall | | 'L' Headwall | | Single Pipe Headwall | | Double Pipe Headwall | | 'L' Headwall | | 'L' Headwall | |
| | No. | Lgth. | No. | Lgth. | No. | Lgth. | No. | Lgth. | No. | Lgth. | No. | Lgth. | No. | Lgth. |
| 18" | 8 | 4'-3 | 9 | 4'-3 | 10 | 4'-3 | 6 | 9'-0 | 6 | 11'-6 | 6 | 6'-6 | 5 | 5'-9 |
| 24" | 10 | 5'-0 | 11 | 5'-0 | 12 | 5'-0 | 6 | 11'-0 | 6 | 14'-0 | 6 | 8'-0 | 6 | 6'-9 |
| 30" | 12 | 5'-6 | 13 | 5'-6 | 14 | 5'-6 | 6 | 13'-0 | 6 | 16'-9 | 6 | 9'-6 | 6 | 7'-9 |
| 36" | 12 | 6'-3 | 13 | 6'-3 | 16 | 6'-3 | 6 | 15'-0 | 6 | 19'-6 | 6 | 11'-0 | 7 | 8'-9 |
| 42" | 14 | 7'-0 | 15 | 7'-0 | 18 | 7'-0 | 6 | 17'-0 | 6 | 22'-3 | 6 | 12'-6 | 7 | 9'-9 |

'a' bars

NOTE:

For General Notes and Chamfer Detail see Std. B-11.10.

Concrete pipe shown. Corrugated metal pipe similar.

High point of headwall shall not project more than 3" above slope.

All concrete shall be Class "B", f'c=2500 psi.

All reinforcing bars are #4.

For 3 or more pipes, add quantities shown for each additional pipe to Double Pipe Headwall quantity. Add one 'a' bar to double pipe headwall total and increase 'b' bar length by Dimension E for each additional pipe.

Dimension E equals pipe spacing.

| | | | |
|---|---|---|---|
| DESIGN APPROVED | ARIZONA DEPARTMENT OF TRANSPORTATION HIGHWAYS DIVISION STANDARD DRAWINGS | | REVISION |
| APPROVED FOR DISTRIBUTION | INLET and OUTLET HEADWALLS 18" to 42" PIPES | | STANDARD NO. B-11.11 |

| DESCRIPTION OF REVISIONS | DATE | BY | APP. BY |
|---|---|---|---|
| 1 | | | |
| 2 | | | |
| 3 | | | |
| 4 | | | |

| DESIGN | B.R. | 4-92 |
|---|---|---|
| DRAWN | J.A.K. | 4-92 |
| CHECKED | | |

ZF1L0850Z0350111.DGN;2 VIEW NAME:
07-MAY-1992 14:14

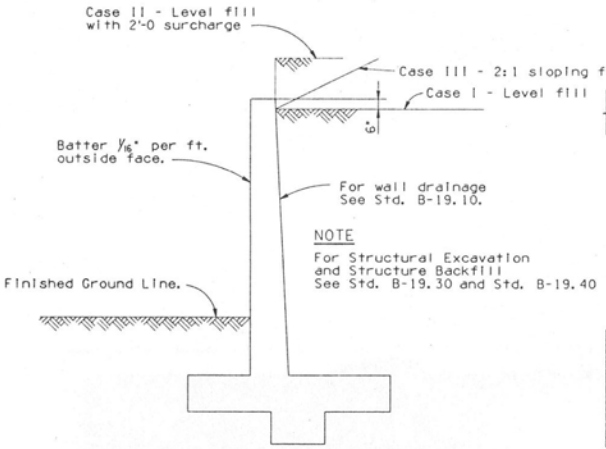


TYPICAL SECTION

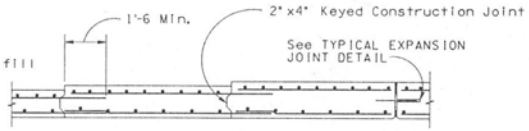


SECTION A-A

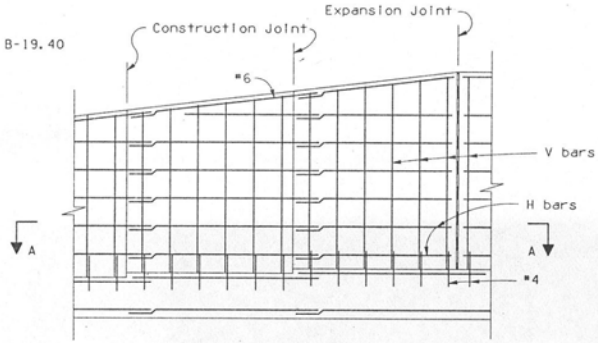


TYPICAL ELEVATION

Outside Face Reinforcing

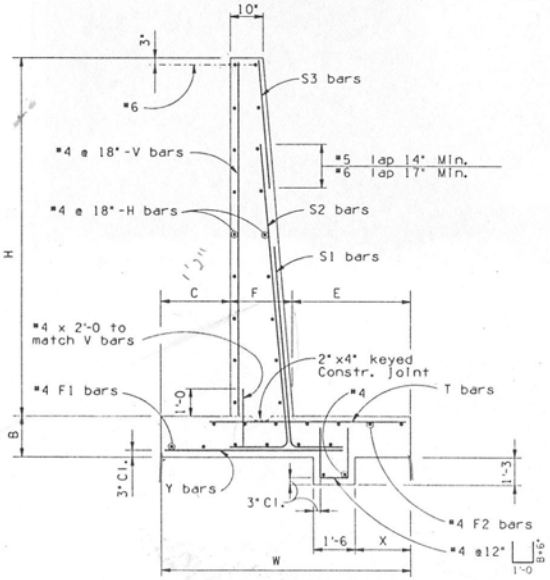


TYPICAL WALL DETAILS

Case I, II & III

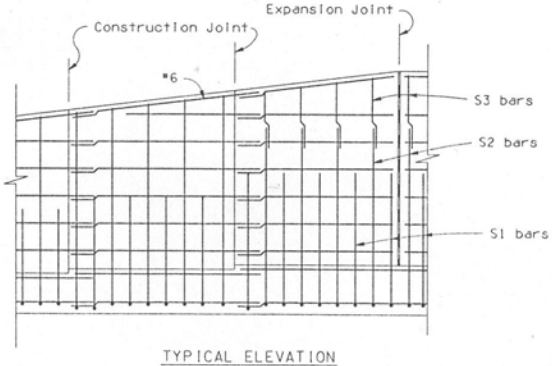


TYPICAL ELEVATION

Inside Face Reinforcing

GENERAL NOTES:

Construction Specification - Arizona Department of Transportation Standard Specifications for Road and Bridge Construction, latest Edition.

Design Specifications - AASHTO Standard Specifications for Highway Bridges, Edition of 1989 and the 1990 Interim Specifications.

Dead Load - Weight of backfill = 120 p.c.f.
Coeficient of friction = .4
Angle of internal friction -
Backfill 33.25°
Existing ground 30.96°

All concrete shall be Class "S" unless noted otherwise.

Reinforcing steel shall conform to ASTM Specification A615. Bar sizes #6 and smaller shall be designed as Grade 40 but may be furnished as Grade 40 or Grade 60. Bar sizes #7 and larger shall be designed and furnished as Grade 60.

All bend dimensions for reinforcing steel shall be out-to-out of bars. All placement dimensions for reinforcing steel shall be to center of bars unless noted otherwise.

All reinforcing steel shall have 2 inch clear cover unless noted otherwise.

Stresses:
Class 'S' Concrete ..... f'c = 3000 psi
Grade 40 reinforcing steel ..... fs = 20000 psi
Grade 60 reinforcing steel ..... fs = 24000 psi

Chamfer all exposed corners 3/4" as per Standard B-19.10 unless noted otherwise.

Dimensions shall not be scaled from drawings.

JOINT NOTE:

All Retaining Walls shall have Construction Joints spaced at not more than 30'-0 apart or as shown. Reinforcing Steel shall project through the joint.

Expansion Joints shall be provided at intervals not exceeding 90'-0.

Footings may be continuous with no joint.

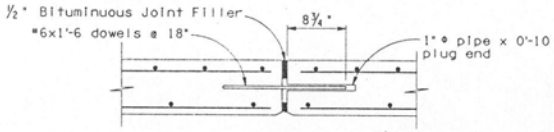


TYPICAL EXPANSION JOINT DETAIL

NOTE:

For Retaining Wall dimensions and quantities see B-18.20 and B-18.30.

| | | | |
|---|---|---|---|
| | DESIGN APPROVED | ARIZONA DEPARTMENT OF TRANSPORTATION HIGHWAYS DIVISION STANDARD DRAWINGS | REVISION 4-92 |
| | APPROVED FOR DISTRIBUTION | CANTILEVER RETAINING WALL DETAILS | STANDARD NO. B-18.10 |

| DESIGN | | | |
|---|---|---|---|
| DRAWN | | | |
| CHECKED | | | |

ZY16B5182B5B0B18.DGN
08-MAY-1992 15:04
VIEW NAME:

| NO | DESCRIPTION OF REVISIONS | MADE BY | DATE |
|---|---|---|---|
| 1 | MODIFIED PLAN VIEW GRAPHICS/REMOVED WIDTH DIMENSION | RLF | 9/04 |
| 2 | REVISED GENERAL NOTES 3 & 4 | RLF | 9/04 |
| 3 | MODIFIED STANDARD DRAWING TITLE | RLF | 9/04 |
| 4 | REVISED SECTION VIEW TITLE | RLF | 7/05 |

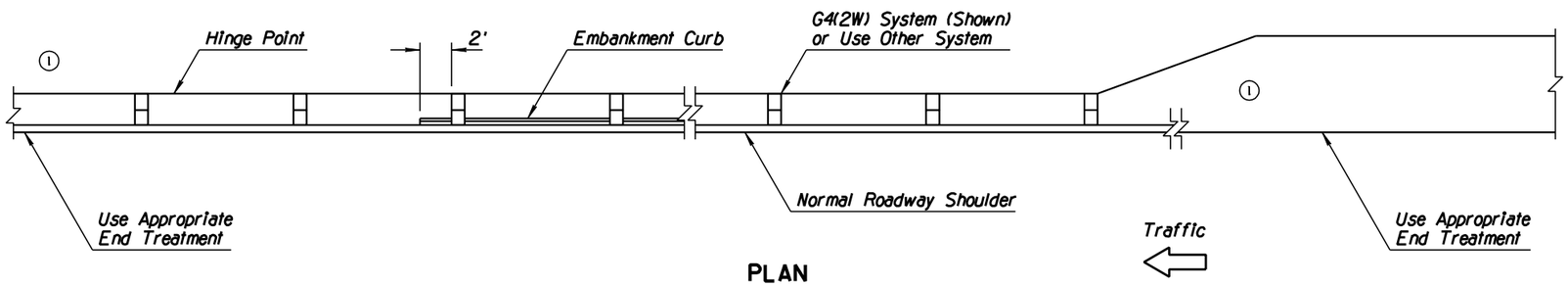


PLAN

## GENERAL NOTES

1. All embankment curb shall be protected by guardrail.
2. Guardrail shall extend beyond the limits of embankment curb.
3. ② See Std Dwg C-10.00 for measurement limits.
4. ② See Std Specs 703, 905 and 1012-3 for reflector tab and snow marker materials, reflective sheeting, and spacing requirements.

▲ Top of Rail = 28"
See General Note 1
Std Dwg C-10.03

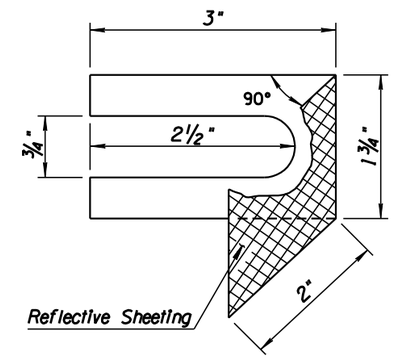


REFLECTOR TAB DETAIL

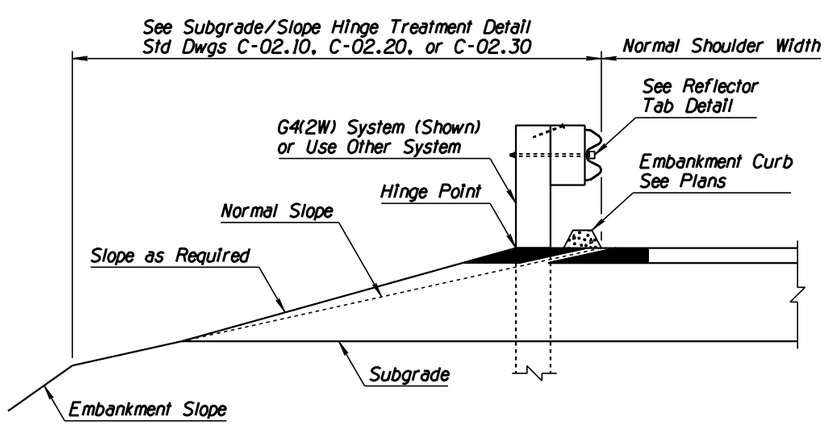


④

TYPE A SECTION

| APPROVED FOR DESIGN | STATE OF ARIZONA<br>DEPARTMENT OF TRANSPORTATION<br>ROADWAY STANDARD DRAWINGS | REV. |
|---|---|---|
| Mary Vipavina | | 5/07 |
| APPROVED FOR DISTRIBUTION | GUARDRAIL INSTALLATION<br>TYPE A AND REFLECTOR TAB ③ | DRAWING NO. |
| | | C-10.01 |

| NO | DESCRIPTION OF REVISIONS | MADE BY | DATE |
|---|---|---|---|
| 1 | RENAMED STD DWG FROM C-10.45 & REVISED TITLE | RLF | 9/04 |
| 2 | REVISED DESIGNATION | RLF | 9/04 |
| 3 | REVISED GENERAL NOTE 2 | RLF | 9/04 |
| 4 | | | |

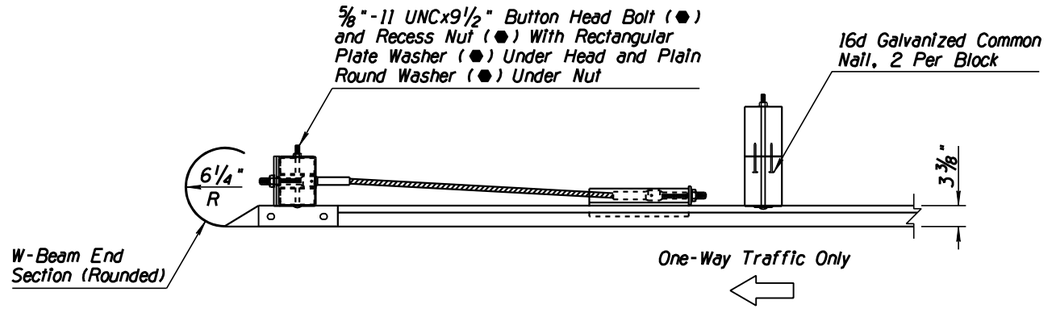


PLAN

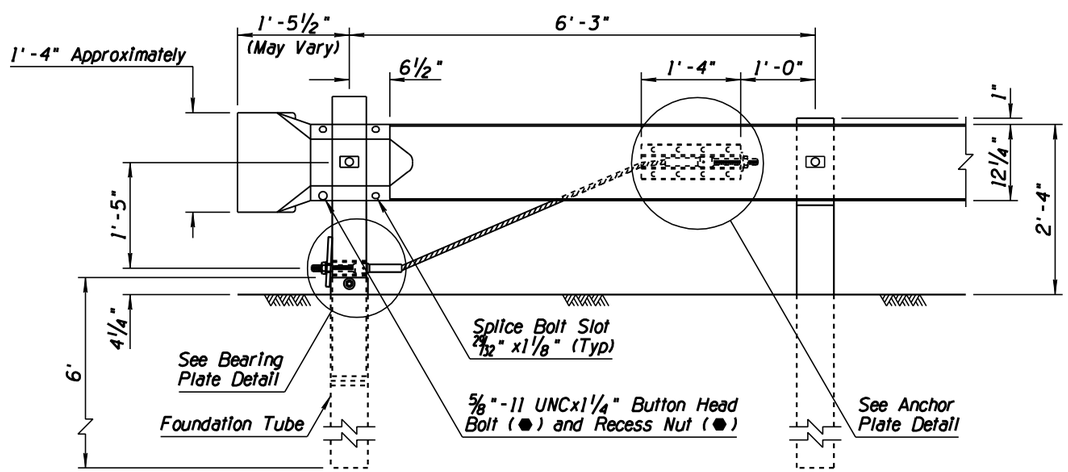


ELEVATION

## GENERAL NOTES

1. The cable assembly shall be tightened to remove slack.
3. 2. One wrap of 14 gauge galvanized steel wire shall be wrapped around the terminal post near the top of the bearing plate.
3. See Std Dwg C-10.00 for measurement limits.
2. ● - Indicates AASHTO, AGC & ARTBA Task Force 13 Report designation

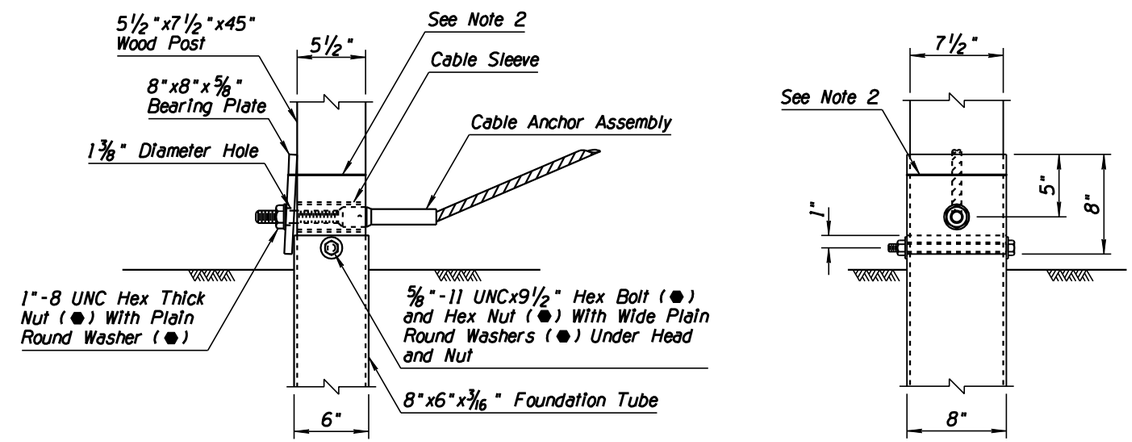


FRONT VIEW

SIDE VIEW

BEARING PLATE DETAIL

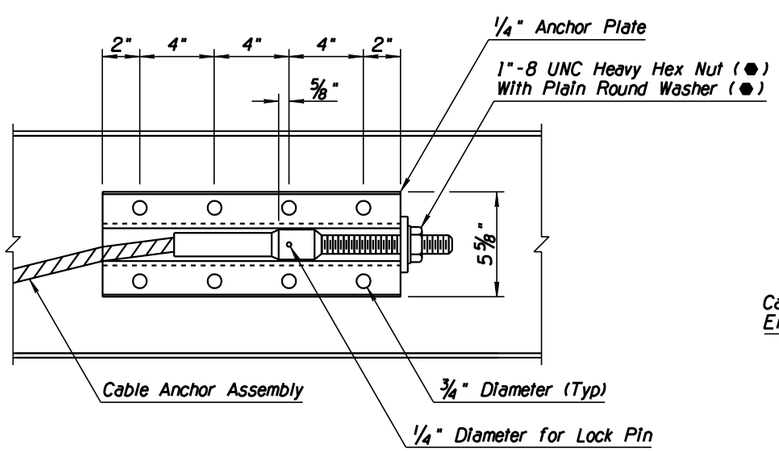


FRONT VIEW

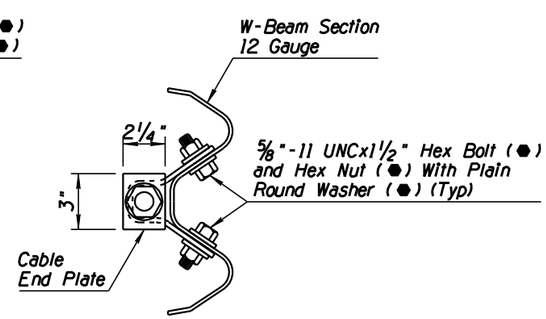


SIDE VIEW

ANCHOR PLATE DETAIL

| APPROVED FOR DESIGN | STATE OF ARIZONA DEPARTMENT OF TRANSPORTATION ROADWAY STANDARD DRAWINGS | REV. |
|---|---|---|
| Mary Vipauna | | 5/07 |
| APPROVED FOR DISTRIBUTION | W-BEAM GUARDRAIL END ANCHOR (1) | DRAWING NO. (1) |
| | | C-10.08 |

| NO | DESCRIPTION OF REVISIONS | MADE BY | DATE |
|---|---|---|---|
| 1 | RENAMED STD DWG FROM C-10.60 & REVISED TITLE | RLF | 9/04 |
| 2 | | | |
| 3 | | | |
| 4 | | | |

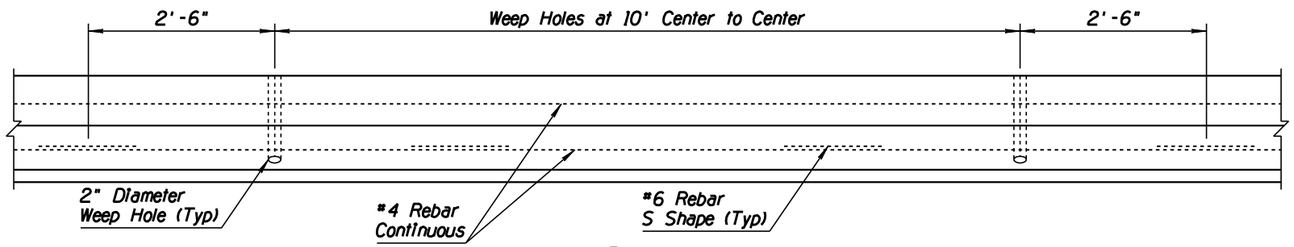


PLAN

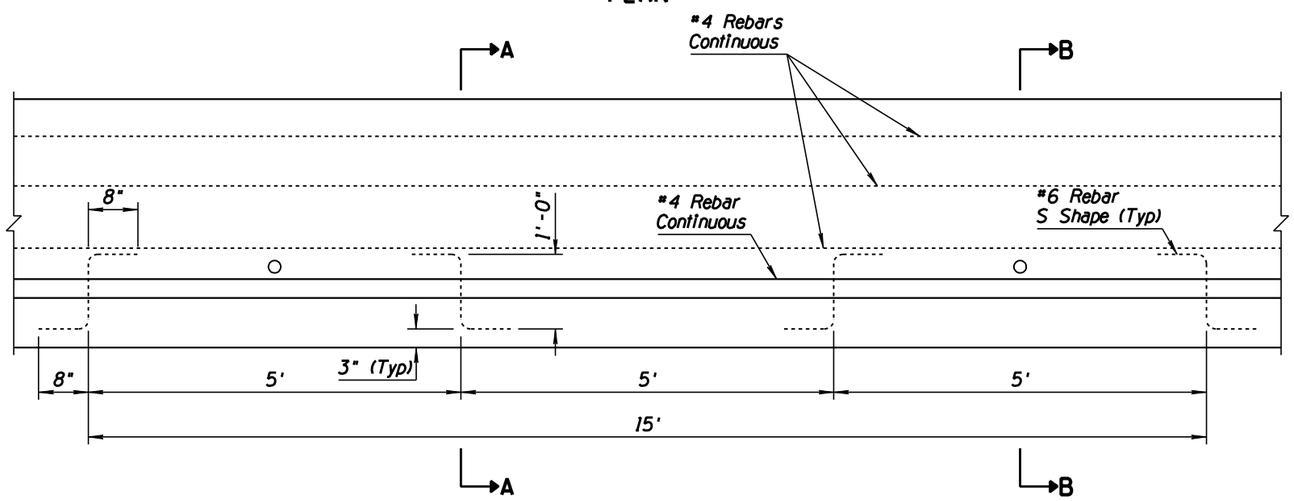


ELEVATION

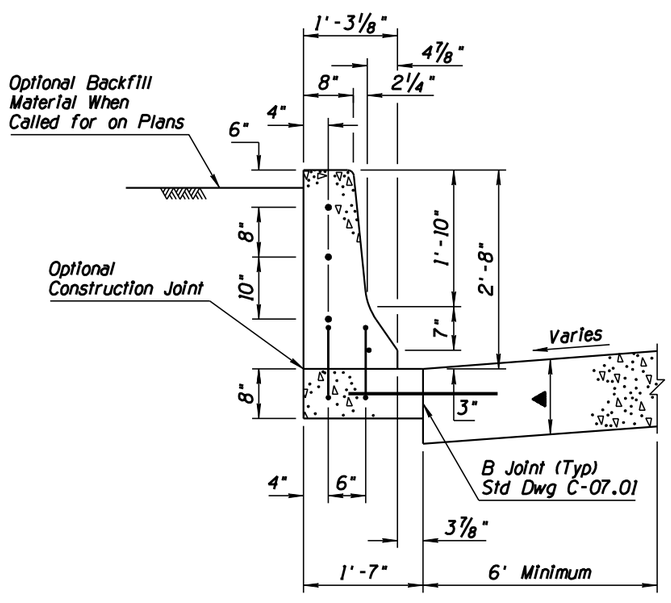


WITH PCCP
SECTION A-A

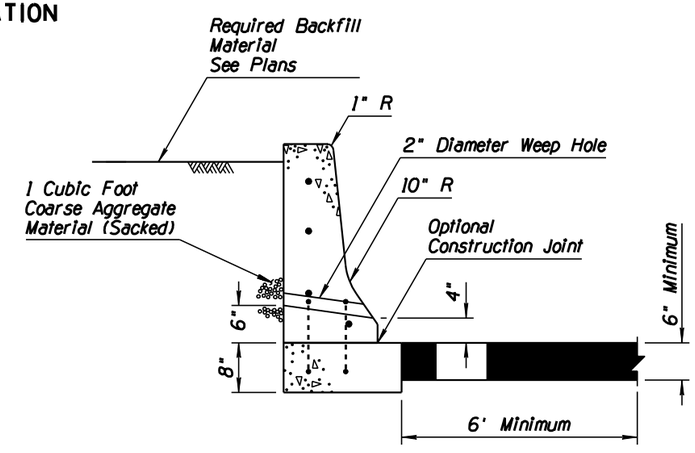


WITH AC
SECTION B-B
SEE SECTION A-A FOR
TYPICAL REBAR PLACEMENT

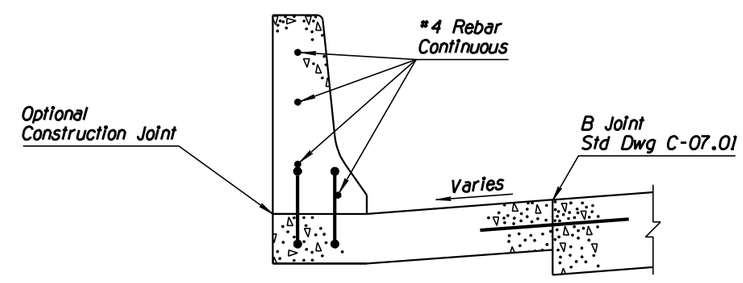


WITH PCCP
BARRIER WITH GUTTER
(SEE STD DWG C-10.52)

## GENERAL NOTES

1. Half barrier shall be constructed by the slip or fixed form method.
2. When obstacles prevent the use of slip form equipment, stationary forms shall be used.
3. Concrete shall be Class S, $f'_c$=4000 PSI.
4. If the footing and barrier are cast monolithically, #6 S shape rebar will not be required.
5. #4 rebar shall extend 12" past the construction joint at the completion of the day's pour.
6. Weep holes shall be placed whenever barrier is backfilled unless otherwise indicated on the plans.

▲ Depth to match adjacent PCCP thickness (8" Minimum).

| APPROVED FOR DESIGN | STATE OF ARIZONA<br>DEPARTMENT OF TRANSPORTATION<br>ROADWAY STANDARD DRAWINGS | REV. |
|---|---|---|
| Mary Vipauna | | 5/07 |
| APPROVED FOR DISTRIBUTION | CONCRETE HALF BARRIER (1)<br>32" TYPE 'F'<br>CAST-IN-PLACE | DRAWING NO. (1)<br>C-10.50<br>Sheet 1 of 2 |

| NO | DESCRIPTION OF REVISIONS | MADE BY | DATE |
|---|---|---|---|
| 1 | RENAMED STD DWG FROM C-10.61 TO C-10.50 & REVISED TITLE | RLF | 9/04 |
| 2 | | | |
| 3 | | | |
| 4 | | | |

## GENERAL NOTES

1. Concrete half barrier shall be precast.
2. Concrete shall be Class S, $f'_c$=4000 PSI.
3. Pavement thickness adjacent to half barrier shall be ¾" minimum.
4. The half barrier shall be placed upon a bed of grout in order to provide a uniform bearing.
5. Doweled joints shall be grouted under pressure until all of the openings and the joints are filled.
6. All bend dimensions for rebar are out-to-out of rebars.
7. Weep holes shall be placed whenever half barrier is backfilled unless otherwise indicated on the plans.

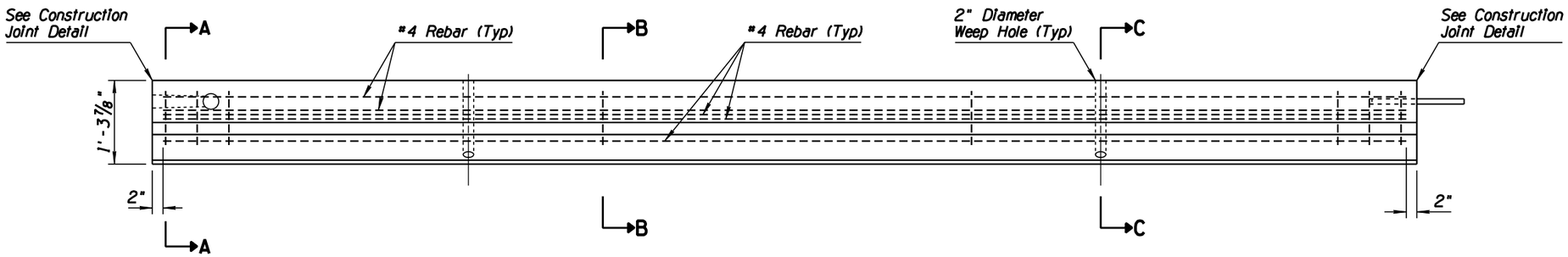


PLAN

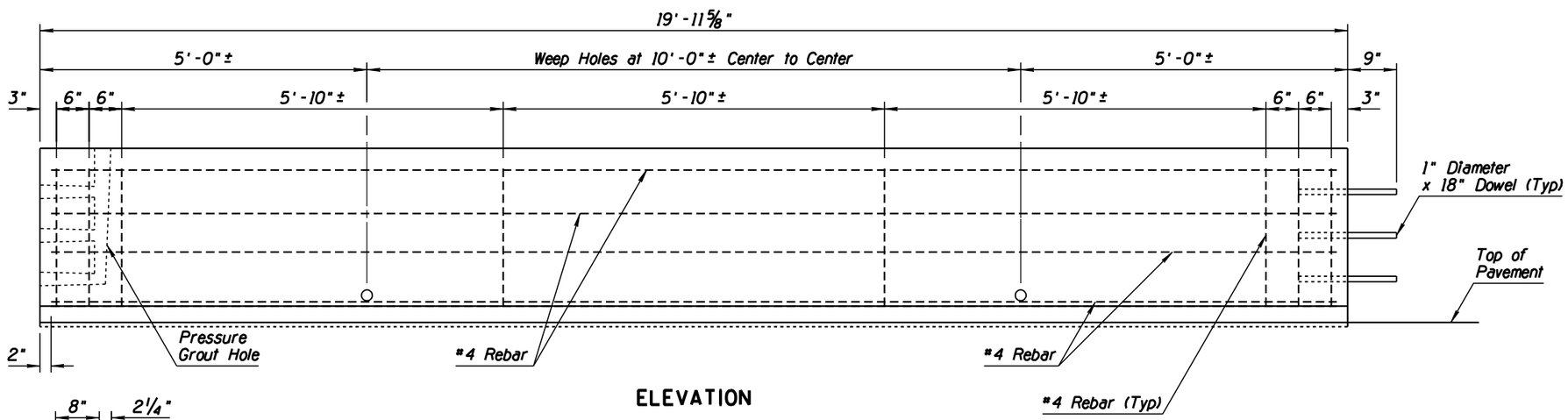


ELEVATION

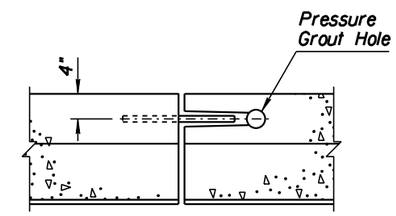


PLAN

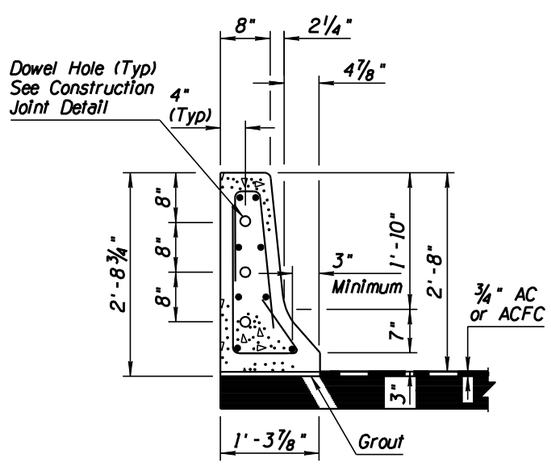


SECTION A-A

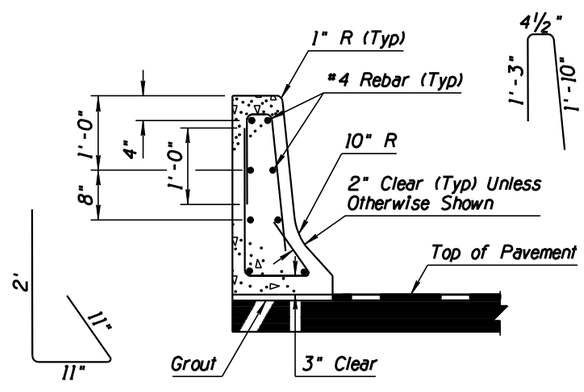


AT REBAR
SECTION B-B
SEE SECTION A-A FOR TYPICAL REBAR PLACEMENT

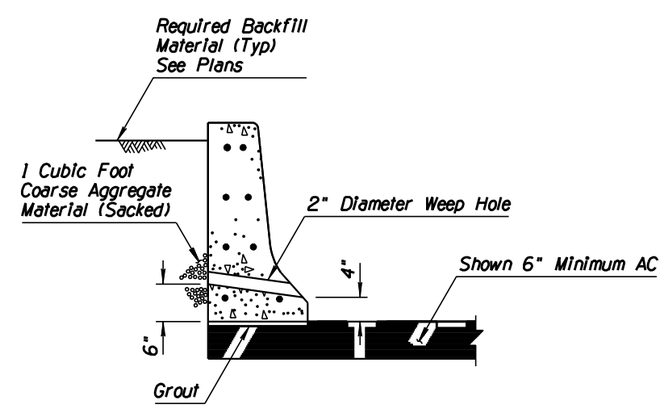


AT WEEP HOLE
SECTION C-C
SEE SECTION A-A FOR TYPICAL REBAR PLACEMENT

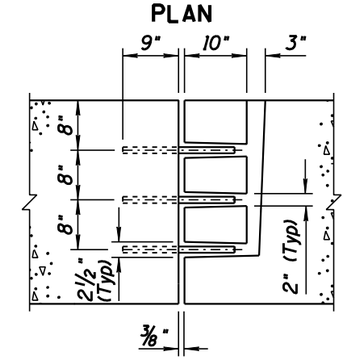


ELEVATION
CONSTRUCTION JOINT DETAIL

| APPROVED FOR DESIGN | STATE OF ARIZONA DEPARTMENT OF TRANSPORTATION ROADWAY STANDARD DRAWINGS | REV. |
|---|---|---|
| Mary Vipaina | | 5/07 |
| APPROVED FOR DISTRIBUTION | CONCRETE HALF BARRIER 32" TYPE 'F' PRECAST (1) | DRAWING NO. (1) C-10.50 Sheet 2 of 2 |

| NO | DESCRIPTION OF REVISIONS | MADE BY | DATE |
|---|---|---|---|
| 1 | REISSUED STANDARD DRAWING | RLF | 7/05 |
| 2 | | | |
| 3 | | | |
| 4 | | | |

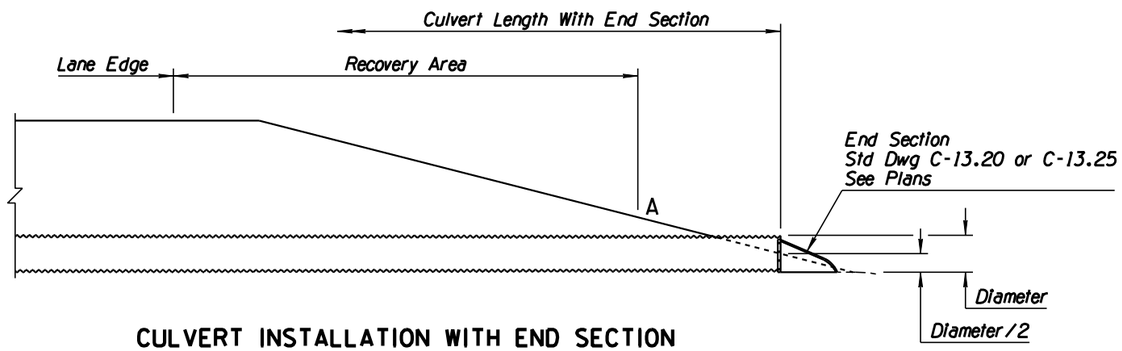


CULVERT INSTALLATION WITH END SECTION

| MINIMUM SPACING FOR MULTIPLE PIPES WITH HEADWALL | |
|---|---|
| Diameter or Span (In) | E (Ft-In) |
| 18 | 2-6 |
| 24 | 3-0 |
| 30 | 3-9 |
| 36 | 4-6 |
| 42 | 5-3 |
| 48 to 66 | OD + 3-0 |
| 72 and Over | OD + 3-0 |

## GENERAL NOTES

1. See plans for any required inlet and/or outlet protection.
2. E dimension applies to both non-trench and trench conditions.
3. Minimum cover over pipe culverts shall be 1', measured from the top of pipe.
4. See Pipe Berm Requirement Detail for pipe berm requirements and Std Dwg C-03.10 for installation. If Point A is within the recovery area, then a pipe berm is required and Point B is set at the edge of the recovery area.
5. Slope plating shall conform to Std Spec 501.

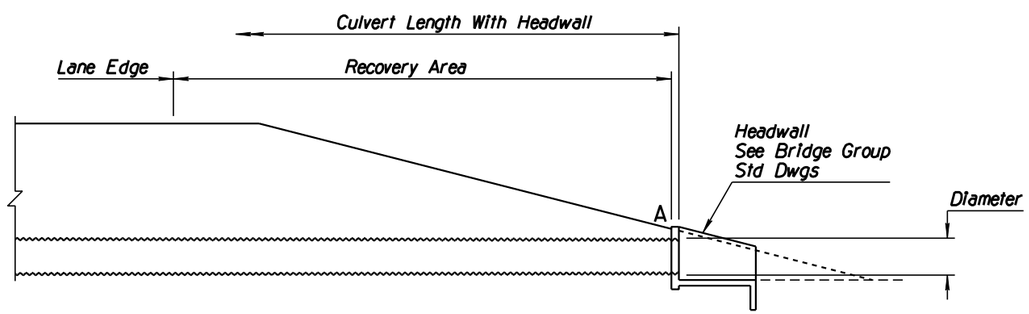


CULVERT INSTALLATION WITH HEADWALL

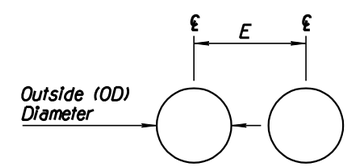


MINIMUM SPACING FOR
MULTIPLE PIPES WITH HEADWALL

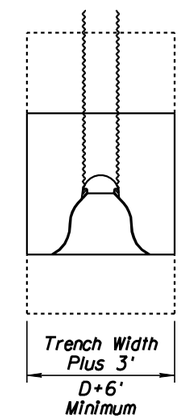


PLAN

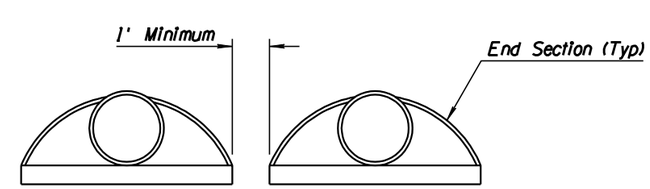


MINIMUM SPACING FOR
MULTIPLE PIPES WITH END SECTIONS

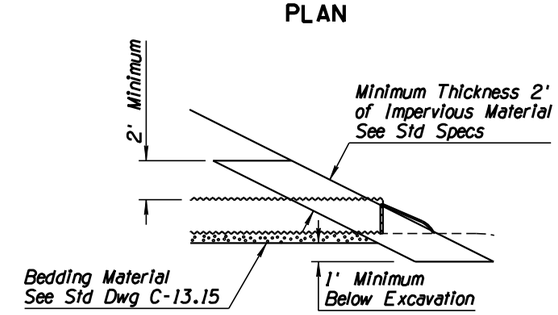


ELEVATION

SLOPE PLATING FOR PIPE
WITH END SECTIONS

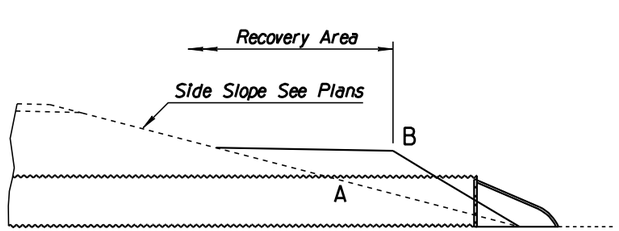


PIPE WITH BERM REQUIREMENT DETAIL

See General Note 4

| APPROVED FOR DESIGN | STATE OF ARIZONA DEPARTMENT OF TRANSPORTATION ROADWAY STANDARD DRAWINGS | REV. 1 5/07 |
|---|---|---|
| APPROVED FOR DISTRIBUTION | PIPE CULVERT INSTALLATION | DRAWING NO. C-13.10 Sheet 1 of 2 |

| NO | DESCRIPTION OF REVISIONS | MADE BY | DATE |
|---|---|---|---|
| 1 | NEW GENERAL NOTE 2 | RLF | 9/04 |
| 2 | | | |
| 3 | | | |
| 4 | | | |

## GENERAL NOTES

1. Minimum cover over pipe culverts shall be 12", measured from the top of pipe.
2. (1) After welding, the damaged coating shall be cleaned by a wire brush and painted with at least one full coat of Paint Number 4, or given two coats of an approved hot asphalt paint, as directed by the Engineer.

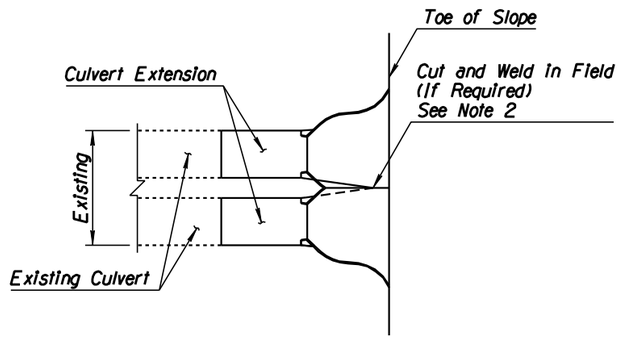


SPECIAL MULTIPLE PIPE END SECTION DETAIL
FOR PIPE CULVERT EXTENSIONS ONLY

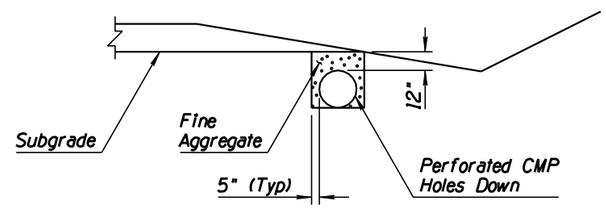


PERFORATED CMP INSTALLATION

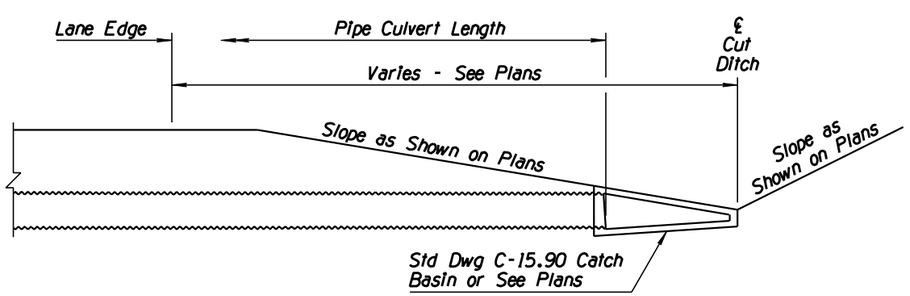


PIPE AND CATCH BASIN INSTALLATION
AT SAG CONDITION OF CUT DITCH

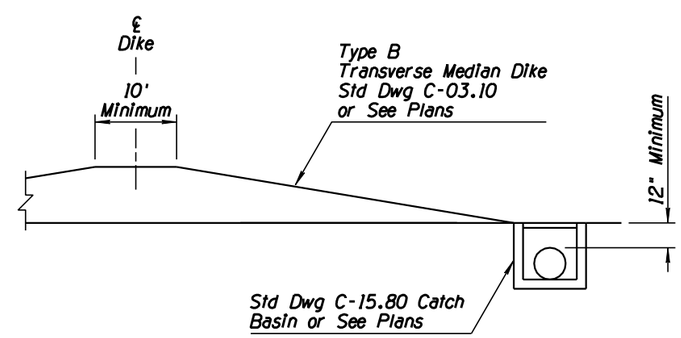


PIPE AND CATCH BASIN INSTALLATION
AT BASE OF TRANSVERSE DIKE

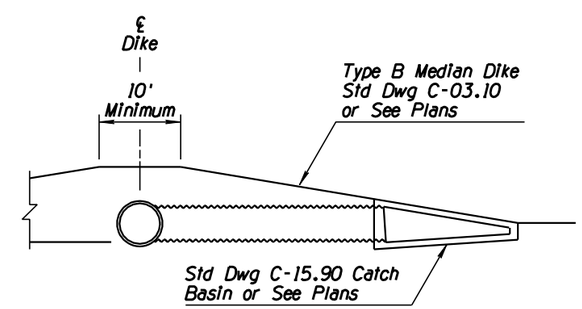


PIPE AND CATCH BASIN INSTALLATION
AT FACE OF TRANSVERSE DIKE

| | | |
|---|---|---|
| APPROVED FOR DESIGN<br>Mary Vipaina | STATE OF ARIZONA<br>DEPARTMENT OF TRANSPORTATION<br>ROADWAY STANDARD DRAWINGS | REV.<br>5/07 |
| APPROVED FOR DISTRIBUTION<br>Julie Bennett | PIPE CULVERT INSTALLATION | DRAWING NO.<br>C-13.10<br>Sheet 2 of 2 |

● FOR ELEVATIONS ABOVE 4,000', USE THE VALUES IN PARENTHESES

| F.H.W.A. REGION | STATE | PROJECT NO. | SHEET NO. | TOTAL SHEETS | AS BUILT |
|---|---|---|---|---|---|
| 9 | ARIZ. | | | | |

## GENERAL NOTES

1. This detail is for roadway layout only.
2. The ET-PLUS shall be installed in accordance with the manufacturer's specifications and current approved drawings including all details, hardware, hardware quantities, and other information.

   The current manufacturer's approved drawing is number SS-358, 05/16/11. Visit the Roadway Design web site to view and print the drawing.
3. ③ "Leaveouts" in asphaltic concrete shall be provided in the AC pavement around the guardrail posts at the locations and dimensions specified on the manufacturer approved drawings. "Leaveout" material shall consist of a 1-sack grout mix or other non-cohesive material as approved by the engineer.
4. See specifications and Traffic Signing and Marking Standard Drawings.

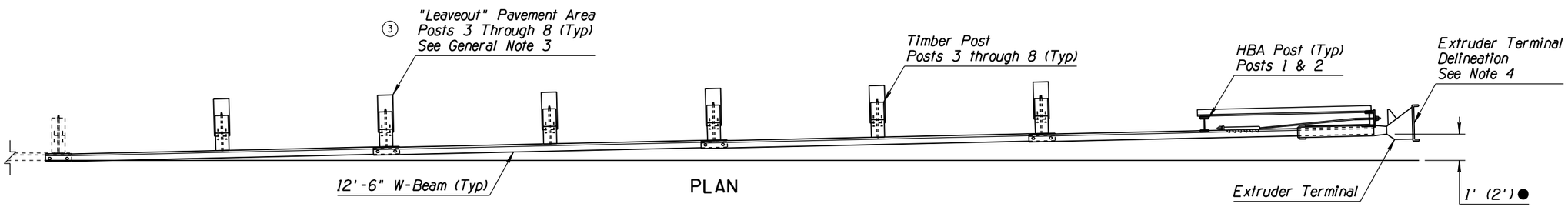


PLAN

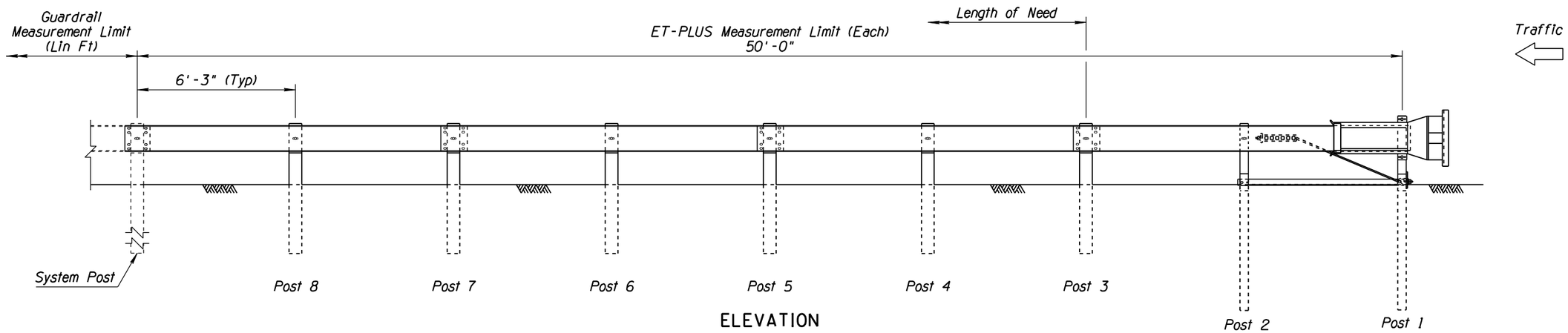


ELEVATION

# DETAIL

Sheet 1 of 2

LAYOUT FOR ET-PLUS
HBA POSTS
(AC PAVEMENT) ①

| | |
|---|---|
| DESIGN APPROVED J.C. Cooper | ARIZONA DEPARTMENT OF TRANSPORTATION INTERMODAL TRANSPORTATION DIVISION ROADWAY GROUP PLANS DETAIL |
| APPROVED FOR DISTRIBUTION Mary Viparina | |
| ROUTE / LOCATION | SHEET ___ OF ___ |
| TRACS NO. | |

Date: 6/06/11

Note to Designer:
The information presented in this Roadway Plans Detail is for general use. Designers should satisfy themselves that their project site conditions are appropriate for use of this drawing. Contents within the inner border shall not be altered, except for the addition of the Detail designation.

| NO | DESCRIPTION OF REVISIONS | MADE BY | DATE |
|---|---|---|---|
| 1 | REISSUED DRAWING WITH MODIFIED APPROACH TAPER | RLF | 5/22/07 |
| 2 | REVISED TITLE BLOCK NAME & DRAWING DATE | RLF | 7/09/09 |
| 3 | ADDED "LEAVEOUT" CALLOUT & NEW GENERAL NOTE 3 | RLF | 6/06/11 |
| 4 | | | |

● FOR ELEVATIONS ABOVE 4,000 FT, USE THE VALUES IN PARENTHESES

▲ Top of Rail = 28"
See General Note 1
Std Dwg C-10.03

| F.H.W.A. REGION | STATE | PROJECT NO. | SHEET NO. | TOTAL SHEETS | AS BUILT |
|---|---|---|---|---|---|
| 9 | ARIZ. | | | | |

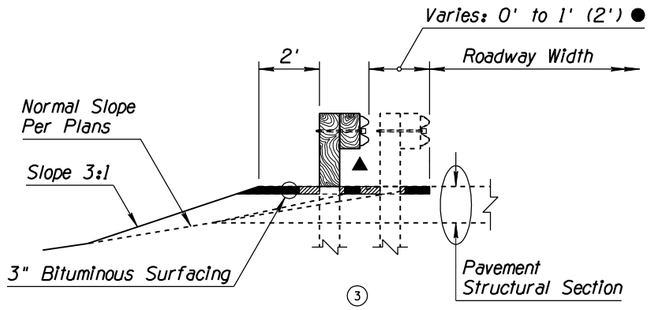


TYPE A SECTION

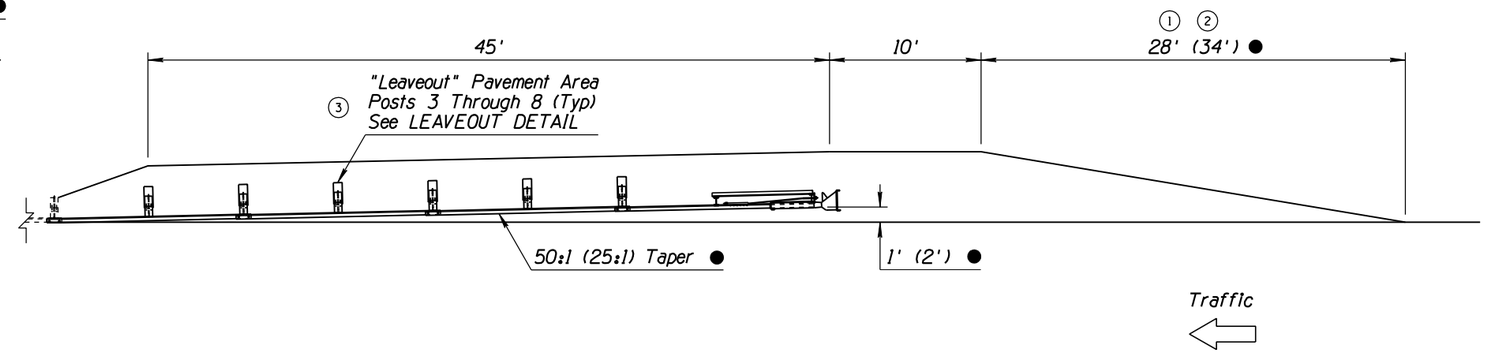


TYPE A GUARDRAIL INSTALLATION
(FACE OF RAIL AT EDGE OF PAVEMENT)

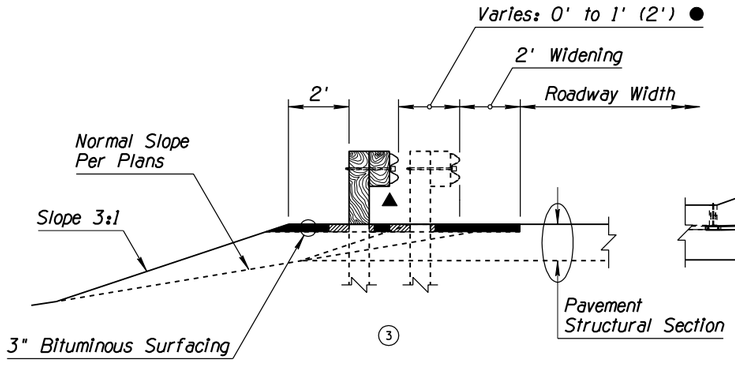


TYPE B SECTION

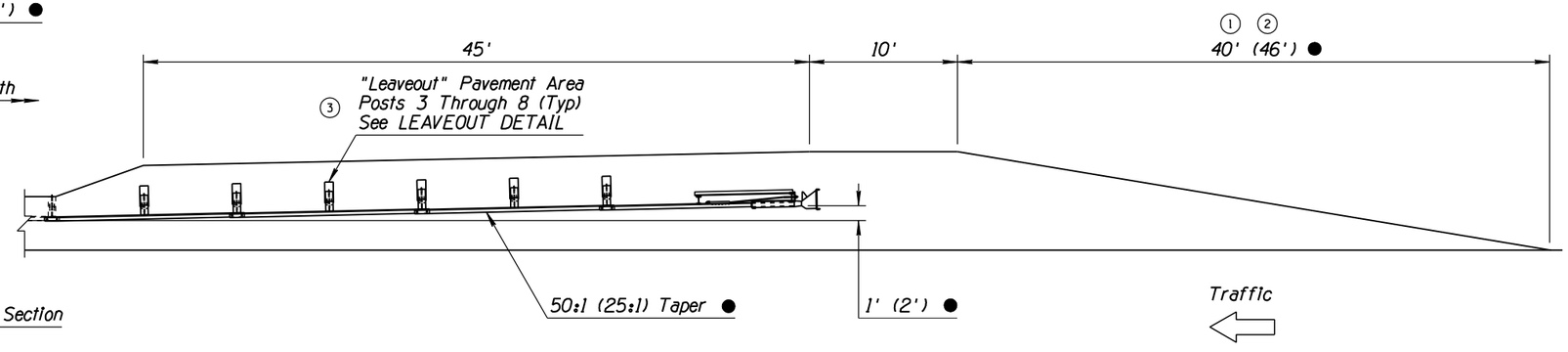


TYPE B GUARDRAIL INSTALLATION
(FACE OF RAIL OFFSET 2' FROM NORMAL EDGE OF PAVEMENT)

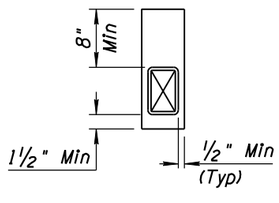


LEAVEOUT DETAIL

④

# DETAIL

Sheet 2 of 2

LAYOUT FOR ET-PLUS
HBA POSTS
(AC PAVEMENT)

| DESIGN APPROVED | ARIZONA DEPARTMENT OF TRANSPORTATION<br>INTERMODAL TRANSPORTATION DIVISION<br>ROADWAY GROUP PLANS DETAIL |
|---|---|
| J.C. Cooper | |
| APPROVED FOR DISTRIBUTION<br>Mary Viparina | |
| ROUTE / LOCATION | SHEET OF |
| TRACS NO. | ___ OF ___ |

Date: 05/16/11

Note to Designer:
The information presented in this Roadway Plans Detail is for general use. Designers should satisfy themselves that their project site conditions are appropriate for use of this drawing. Contents within the inner border shall not be altered, except for the addition of the Detail designation.

| NO | DESCRIPTION OF REVISIONS | MADE BY | DATE |
|---|---|---|---|
| 1 | REISSUED DRAWING WITH MODIFIED APPROACH TAPER | RLF | 5/22/07 |
| 2 | REVISED APPROACH TAPER CRITERIA | RLF | 7/09/09 |
| 3 | ADDED "LEAVEOUT" CALLOUT & REVISED SECTION VIEWS | RLF | 5/16/11 |
| 4 | ADDED "LEAVEOUT" DETAIL | RLF | 5/16/11 |

**ARF-1029** **Regular Agenda Item 4- F**

**Regular BOS Meeting**

**Meeting Date:** 01/10/2012

Submitted By: Marian Sheppard, Chief Deputy Clerk, BOS, Clerk of the Board of Supervisors

Department: Clerk of the Board of Supervisors

Presenter's Name: Marian Sheppard

---

Information

Request/Subject

Disclosure of Conflicts of Interest Policy - Annual Reminder

Background Information

On December 13, 2005, the Board of Supervisors adopted policy number BOS-4-2005 - DISCLOSURE OF CONFLICTS OF INTEREST. This policy applies to all public officers and employees of Gila County. This policy was adopted in accordance with Arizona Revised Statutes 38-501 and 38-511. Arizona law requires that any Gila County officer or employee who has, or whose relative has, a substantial interest in any contract, sale, purchase, service or decision of Gila County to make the interest known in the County's official records; and to refrain from any participation in an official capacity in the contract, sale, purchase, service or decision. (A.R.S. § 38-501 et seq.). Employee includes all persons employed on a full-time, part-time and contract basis.

The object of conflict of interest statutes is to remove or limit the possibility of personal influence which might bear upon an official's decision.

Evaluation

Section III-Elected Official or Departmental Responsibility states "Note: Each year during the first regularly scheduled meeting of the Board of Supervisors, the Chief Deputy Clerk of the Board of Supervisors will remind each elected official and division director to communicate this policy to their employees."

Conclusion

It is appropriate at this time for the Chief Deputy Clerk to issue this reminder to all elected officials and division heads to remind their employees of this countywide policy.

Recommendation

The Chief Deputy Clerk of the Board of Supervisors (BOS) recommends that this reminder be provided during the first regularly scheduled BOS meeting of 2012 in accordance with Gila County policy number BOS-4-2005.

Suggested Motion

Presentation of information related to Gila County Policy No. BOS-4-2005, Disclosure of Conflicts of Interest, with a reminder to each elected official and division/department director to communicate said policy to their employees. **(Marian Sheppard)**

---

Attachments

Policy # BOS-4-2005

**GILA COUNTY, ARIZONA**

**BOARD OF SUPERVISORS POLICY**

| Subject: | Policy Number | Page |
|---|---|---|
| Policy for Disclosure of Conflicts of Interest | BOS-4-2005 | 1 of 4 |

## I. Purpose

The purpose of this policy is to ensure compliance with A.R.S. § 38-501 and 38-511. It is designed to preserve and promote the integrity of the workplace through individual departmental procedures. This policy applies to all public officers and employees of Gila County.

## II. Conflicts of Interest

### A. General Requirements and Objective

Arizona law requires that any Gila County officer or employee who has, or whose relative has, a substantial interest in any contract, sale, purchase, service or decision of Gila County to make the interest known in the County's official records; and to refrain from any participation in an official capacity in the contract, sale, purchase, service or decision. (A.R.S. § 38-501 *et seq.*). Employee includes all persons employed on a full-time, part-time and contract basis.

The object of conflict of interest statutes is to remove or limit the possibility of personal influence which might bear upon an official's decision.

### B. Relative

Relative includes spouse, child, child's child, parents, grandparents, brother or sister of the whole or half blood and their spouses and the parent, brother, sister or child of a spouse. A substantial interest of a relative is considered a substantial interest of the employee.

### C. Substantial Interest

A substantial interest is any interest that confers a pecuniary (monetary) or proprietary (ownership) interest, either direct or indirect, which is not a remote interest. Any substantial interest of an employee or an employee's relative must be disclosed by the employee, who must also refrain from participating in any manner in the relevant contract, purchase, or decision.

**D. Remote Interest Defined**

Remote interests do not need to be disclosed and do not prevent participation in an official capacity because they are not considered significant enough to influence a public decision maker. Remote interests are:

1. employee or employee's relative is a non-salaried officer of a non-profit corporation

2. employee or employee's relative is a landlord or tenant of a contracting party

3. employee or employee's relative is an attorney of a contracting party

4. employee or employee's relative is a member of a non-profit cooperative marketing association

5. employee or employee's relative owns less than 3 percent of the shares for a for-profit corporation, provided the total annual income from dividends, including the value of stock dividends, from the corporation does not exceed 5 percent of the total family income of the official or employee, and other payments from the corporation to the person do not exceed an additional 5 percent of his/her total family income

6. employee or employee's relative is reimbursed for actual and necessary expenses incurred in the performance of official business

7. employee or employee's relative is a recipient of public services generally available to the public

8. employee or employee's relative is a public officer or employee of another public agency unless the action of that agency would confer a direct economic benefit or detriment upon the employee or employee's family

9. employee or employee's relative is a member of a trade, business, occupation or professional association or class of persons consisting of at least 10 members whose interest is no greater than the interest of any other members of that or similar groups

**E. Responsibilities of Employees**

Any employee who has, or whose relative has, a substantial interest in any contract, sale, purchase, service or decision of Gila County shall promptly do two things:

1. make known that interest in the files maintained by the Chief Deputy Clerk of the Board of Supervisors; and

2. refrain from voting or participating in the employee's official capacity in any manner in the contract, sale, purchase, service or decision.

**F. Appearance of Impropriety and the Gila County Standards of Conduct Policy**

It is important to recognize that the appearance of a conflict of interest may also damage public trust and confidence in local government and may impair Gila County's ability to conduct its legitimate operations. For this reason, employees are required to scrutinize their actions to avoid situations where their official acts appear to affect their own or their relatives' private or business interests. All County employees must adhere to Gila County's Merit System Rules and Policies – Rule 6 – Standards of Conduct.

## III. Elected Official or Departmental Responsibility

Each elected official and division/department director shall develop and implement a departmental procedure requiring employees to give notice of potential conflicts of interest. The departmental procedure shall delineate the means of giving notice and department-specific criteria or requirements. The attached Notice of a Substantial Interest in a Gila County Contract, Sale, Purchase, Service, or Decision form shall be used. (See Attachment A)

Note: Each year during the first regularly scheduled meeting of the Board of Supervisors, the Chief Deputy Clerk of the Board of Supervisors will remind each elected official and division/department director to communicate this policy to their employees.

## IV. Violations

Violations of A.R.S. §38-501 *et. seq.*, this policy or departmental procedures shall be handled in accordance with the Gila County Merit System Rules and Policies. Employees who violate A.R.S. §38-501 *et. seq.*, may also be subject to criminal prosecution and forfeiture of employment, as provided by law.

---

Adopted by the Gila County Board of Supervisors on the 13th day of December 2005.

**Attachment A**

# NOTICE OF A SUBSTANTIAL INTEREST IN A GILA COUNTY CONTRACT, SALE, PURCHASE, SERVICE, OR DECISION

Date _____

Department _____

Employee/Officer _____

Title _____

Pursuant to ARS § 38-503,_____, hereinafter Employee/officer hereby makes known a substantial interest in a contract, sale, purchase, service or decision of Gila County. The substantial interest is described below.

(Attach additional documentation if necessary.)

☐ Employee/officer has pecuniary or propriety interest in a County contract, sale, purchase, service or decision as follows:

_____
_____
_____
_____

☐ Employee/officer's relative, _____, who is the employee/officer's

_____child
_____child's spouse
_____grandchild
_____spouse of grandchild
_____parent
_____spouse of parent
_____child of a spouse

_____grandparent
_____spouse of grandparent
_____spouse
_____brother-in-law or sister-in-law
_____mother-in-law or father-in-law
_____brother or sister or half-brother or half-sister

has a pecuniary or propriety interest in a County contract, sale, purchase, service or decision as follows:

_____
_____
_____
_____

Signed the _____day of _____20__

_____
Employee/Officer

Received by:

_____
Name and Title

_____
Signature Date

Dated: December 13, 2005/Revised January 11, 2006

**Attachment A Instructions**

**INSTRUCTIONS FOR NOTICE OF A SUBSTANTIAL INTEREST IN A GILA COUNTY CONTRACT, SALE, PURCHASE, SERVICE, OR DECISION FORM**

Employees interested in filing a notice of substantial interest in a contract, sale, purchase, service or decision of Gila County should be asked the following three questions:

(1) Will the decision have an impact, either positive or negative, on an interest of the County employee or relative?

(2) Is the interest pecuniary (monetary) or proprietary (ownership)? Philosophical or political interest or beliefs, even though affected by a decision do not bring the conflict of interest into play.

(3) Is the interest **other than one** statutorily defined as a remote interest?

Statutory remote interests are:

- Non-salaried officer of a non-profit corporation
- Landlord or tenant of a contracting party
- Attorney of a contracting party
- Member of a non-profit cooperative marketing association
- Insignificant stock ownership
- Reimbursement of expenses incurred on duty
- Recipient of public services available to all
- Employee or relative of another public agency unless there is a direct benefit on the employee or relative
- Class interest where there are more than 10 members of the class and all members have equal interest

Refer to Clerk of the Board Policy – DISCLOSURE OF CONFLICTS OF INTEREST for a more complete description of these remote interests.

**If the answer to all three questions is yes then the employee must complete the Notice of a Substantial Interest Form.**

The form is to be filed in the Chief Deputy Clerk of the Board of Supervisors' conflict of interest file and maintained as a public record.

Dated: December 13, 2005

**ARF-999** **Consent Agenda Item 5- A**

**Regular BOS Meeting**

**Meeting Date:** 01/10/2012

| | | | |
|---|---|---|---|
| Submitted For: | Malissa Buzan, CAP/Housing Services Manager | Submitted By: | Cecilia Bejarano, Executive Administrative Assistant, Community Services Division |
| Department: | Community Services Division | Division: | Comm. Action Program/Housing Servs. |
| Fiscal Year: | 7/1/2011 - 6/30/2012 | Budgeted?: | Yes |
| Contract Dates Begin & End: | Upon signature by both parties through 6/30/2012 | Grant?: | Yes |
| Matching Requirement?: | No | Fund?: | Replacement |

Presenter's Name:

---

Information

Request/Subject

Amendment No. 1 to Contract No. LW-ESA-12-2182-02 with Governor's Office of Energy Policy.

Background Information

For the past 10 years, the Gila County Division of Community Services, Weatherization Program, has applied for and received low-income weatherization dollars to serve the low income population of Gila County. The Weatherization Program is the designated agency that provides weatherization services through the State of Arizona, Governor's Office of Energy Policy.

The purpose of the Weatherization Assistance Program is to install energy efficiency measures in the homes of income eligible persons, especially homes occupied by the elderly, persons with disabilities, and children. The recipients of this program also benefit by using less utilities, therefore saving money on their utility bills.

Original Contract No. LW-ESA-12-2182-02 was signed by Chairman Tommie C. Martin on 10/3/2011.

Evaluation

The Weatherization Program enables income-eligible families to reduce their energy bills by making their homes more energy efficient.

Since 1977, weatherization services has been provided to more than 6.2 million low-income families. Under the Recovery Act, the program is expanding, creating local jobs across the country even as it helps additional low income residents enjoy greater home comfort, safety and energy efficiency.

Amendment No. 1 adds additional funding in the amount of $9,200.44 and is broken down as follows: Residual FY11 carryover funds of $185,440; FY12 mid-year award of $9,015. Amount of administrative costs will change from $7,142 to $8,751, an increase of $1609. Program operations funding will go from $128,551 to $136,142.44 an increase of $7591.44. Total funding amount will change from $135,693 to $144.893.44.

Conclusion

By the Board of Supervisors approving Amendment No. 1 to Contract No. LW-ESA-12-2182-02 Gila County Community Action Program, Weatherization Program, will continue to provide weatherization services to eligible citizens of Gila County.

Recommendation

The Community Action Program, Housing Services Manager recommends that the Board of Supervisors approve this Amendment.

Suggested Motion

Approval of Amendment No. 1 to Contract No. LW-ESA-12-2182-02 between the Governor's Office of Energy Policy and the Gila County Division of Community Services, Weatherization Program, to receive additional funding in the amount of $9,200.44, for a total budget of $144,893.44, to continue to provide weatherization services to eligible citizens residing in Gila County, effective upon signature by both parties and continuing through June 30, 2012.

---

Attachments

Amendment No. 1 Contract LW-ESA-12-2182-02

Original Contract LW-ESA-12-2182-02

Legal Explanation

# Contract Amendment

Contractor Name and Address:

**GILA COUNTY**
**5515 South Apache Avenue, Suite 200**
**Globe, AZ 85501**

Contract No.: **LW-ESA-12-2182-02**

Amendment No.: **1** Page 1 of 1

**Governor's Office of Energy Policy**
1700 W. Washington, Suite 220
Phoenix, Arizona 85007

**This contract is amended as follows:**

1. Page 2, **Paragraph IV**, CONTRACT BUDGET, is deleted in its entirety and replaced with the following:

**IV. CONTRACT BUDGET**

A. The total LIHEAP Budget for this AGREEMENT shall not exceed **$144,893.44**.

B. Contractor agrees that it will use the funds solely and strictly for the purposes outlined in the Scope of Work and in accordance with the attached Budget, Exhibit A, incorporated by reference.

ALL OTHER PROVISIONS OF THE CONTRACT SHALL REMAIN IN THEIR ENTIRETY.

| THE CONTRACTOR ACKNOWLEDGES RECEIPT AND UNDERSTANDING OF THE ABOVE AMENDMENT | THE ABOVE REFERENCED AMENDMENT IS HEREBY EXECUTED ON BEHALF OF THE GOVERNOR'S OFFICE OF ENERGY POLICY BY: |
|---|---|
| | Leisa B. Brug 11-23-11 |
| SIGNATURE DATE | SIGNATURE DATE |
| Tommie C. Martin<br>CHAIRMAN, GILA COUNTY BOARD OF SUPERVISORS | LEISA B. BRUG, DIRECTOR<br>Or Authorized Signatory |
| Chief Deputy County Attorney DATE<br>Bryan B. Chambers | |

| Exhibit A - Budget | |
|---|---|
| **GILA COUNTY** | |
| **LIHEAP Weatherization Program Budget** | |
| **OEP Contract Number LW-ESA-12-2182-02 AM#1** | **LIHEAP TOTAL BUDGET** |
| | |
| **Contract term to 6-30-2012** | |
| | |
| **1. Administration Costs** | $8,751.00 |
| **2. Program Operations** | $136,142.44 |
| | |
| | |
| **Budget Total** | **$144,893.44** |

# WEATHERIZATION LOW-INCOME ASSISTANCE AGREEMENT

**BETWEEN**

**STATE OF ARIZONA**
**GOVERNOR'S OFFICE OF ENERGY POLICY**

**and**

**GILA COUNTY**

**THIS Weatherization Low-Income Assistance Contractual Agreement ("AGREEMENT") is made,** by and between the **State of Arizona, Governor's Office of Energy Policy ("OEP")**, located at 1700 West Washington, Suite 220, Phoenix, Arizona 85007, and **Gila County, Office of Community Services ("Contractor")**, located at 5515 South Apache Avenue, Suite 200, Globe, Arizona 85501.

WHEREAS, A.R.S. § 41-101.01 and Executive Order 2011-02 authorizes OEP to execute and administer contracts.

WHEREAS, A.R.S. §11-201 authorizes the Gila County Government to execute and administer contracts.

**WHEREAS**, OEP desires to engage the Contractor to render certain services, hereinafter described, in connection with a Weatherization services work program funded by the U.S. Department of Health and Human Services (HHS) Low-Income Home Energy Assistance Program ("LIHEAP"), authorized under Title XXVI of the Omnibus Budget Reconciliation Act of 1981, as amended (Pub. L. No. 97-35, as amended and codified at 42 U.S.C. 8621-8629) passed through the OEP from the Arizona Department of Economic Security (DES) through an Interagency Service Agreement dated June 24, 2011.

In consideration of the representations and obligations hereunder, the OEP and Contractor agree as follows:

## I. PURPOSE OF THE AGREEMENT

The purpose of the Weatherization Assistance Program is to install energy efficiency measures in the homes of income eligible persons, especially homes occupied by the elderly, persons with disabilities, and children. Funds are targeted to the most cost-effective efficiency measures, determined from an on-site energy audit of the building.

## II. TERM OF CONTRACT

This AGREEMENT shall become effective upon signature by both parties and continue through June 30, 2012, unless terminated, cancelled or extended as otherwise provided herein. Pre-award cost expenses are allowable beginning July 1, 2011 if the pre-award expenses are submitted with the Contractor's first monthly reimbursement request pursuant to the requirements listed in Section V, subsection C.

## III. CONTRACT TYPE

Cost Reimbursement Sub-Grant.

## IV. CONTRACT BUDGET

A. The total LIHEAP budget for this AGREEMENT shall not exceed **$135,693.00.**

B. Contractor agrees that it will use the funds solely and strictly for the purposes outlined in the Scope of Work and in accordance with the attached Budget, Exhibit A, incorporated by reference.

## V. SCOPE OF WORK

### A. GENERAL REQUIREMENTS

Contractor shall implement weatherization services under the terms of this AGREEMENT in coordination with other federal, state and local weatherization related services or energy efficiency programs in order to preclude duplication of services generally and to optimize residential energy efficiency efforts within the Contractor's service delivery area.

### B. SPECIFIC REQUIREMENTS

The Contractor shall perform the services under this AGREEMENT, in accordance with the then existing edition of the Program Requirements, incorporated herein by reference. The current edition is attached to this AGREEMENT as Exhibit B. Program Requirements may change and the Contractor will be notified by the OEP. Contractor shall perform the services in accordance with the then existing edition of the Program Requirements immediately upon notification by OEP or actual/constructive notice by any other means.

### C. METHOD OF PAYMENT

1. Program expenses for this AGREEMENT are allowable beginning the effective date of this AGREEMENT.

2. All reimbursement of travel expenses shall be paid in accordance with the Contractor's travel policies, but shall not exceed the Domestic Per Diem rates allowed under the Federal Travel Management Policy, and the prevailing Federal standard mileage rates.

3. The OEP shall provide to Contractor master templates for the Payment Request Form and the Financial Report Form to use in requesting LIHEAP funds during the term of the AGREEMENT.

4. The Contractor shall submit to the OEP no later than the twelfth (12th) working day of the following month (excluding state observed holidays) a monthly Payment Request Form, a Financial Report Form showing monthly and cumulative expenditures by line item according to Exhibit A, and a list of database client job numbers of completed and submitted jobs entered on the Weatherization Program Database website for the report month. All documents must indicate the contract name and number.

5. Reimbursement

   a. Reimbursement requests shall be submitted to the OEP on a Payment Request Form a minimum of once a month for services performed and work completed to date. Include reporting month, dollar amount requested, original signature, and date. The *COMPLETED/SUBMITTED JOBS* check-box section of the

Payment Request Form must be marked with appropriate choice and if applicable, attach documentation:

- *Completed/Submitted Jobs listing attached* (Attach list)
- *Completed/Submitted Jobs listing sent via email to* ebillings@az.gov (Send list by email to Evelyn Billings)
- *No Completed/Submitted jobs this month* (No list is required)

b. Reimbursement requests will be processed for payment upon determination that all reporting elements have met Weatherization contractual requirements. If reimbursement requests do not meet Weatherization contractual requirements, the OEP will provide a report listing areas out of compliance and remedies needed to bring the request into compliance.

D. **REPORTS**

1. Weatherization Program Database Website

a) For each dwelling unit completed, the Contractor shall input in the database the client information, house occupant information, and data on House Characteristics, Combustion Safety, Diagnostics and Work Performed to the fullest extent possible.

b) No later than the twelfth (12th) working day of the following month (excluding state observed holidays), each completed dwelling unit submitted for payment in the report month must have the job submitted as final on the website.

2. List of Client Jobs

a) A hard-copy client list, referencing the website client job numbers of completed jobs being requested for payment, must be submitted either by email to ebillings@az.gov or attached as a separate document to the Payment Request Form. As applicable, the appropriate check-box must be marked on the Payment Request Form utilizing the following choices:

- *Completed/Submitted Job listing attached*
- *Completed/Submitted Job listing sent via email to* ebillings@az.gov

b) If there are no dwelling units completed and submitted as final on the website for a billing month, the following box on the Payment Request Form should be checked:

- *No Completed/Submitted jobs this month*

3. Financial Report Form

a) The Financial Report shall show per line item current expenditures of the reporting period, and cumulative expenditures to date.

4. Monthly Detailed Expense Financial Reports

a) Detailed financial expense documentation reports generated by Contractor's accounting system that reflect Contractor's Weatherization budget expenses must be submitted monthly with a Payment Request for the purpose of fiscal desk-audit monitoring.

5. Report Submittal Requirements

a) The Payment Request Form and Financial Report Form shall be mailed to the OEP no later than the twelfth (12th) working day of the month on or before 5:00 P.M. taking into consideration any State holiday.

b) Payment Request Forms must be submitted even if there was no production or fiscal activity during the report month.

c) Final reports shall be submitted no later than July 26, 2012.

E. **SUBMITTAL ADDRESS**

All Payment Request Forms and Report Forms must be directed to:

**Governor's Office of Energy Policy**
**1700 W. Washington, Suite 220**
**Phoenix, Arizona 85007**

F. **SERVICE TERRITORY**

Gila County, excluding tribal organizations.

## VI. REGULATION REQUIREMENTS

A. As applicable, Contractor must follow conditions set forth by the U. S. Department of Energy, 10 C.F.R. pt.440, and the OEP, in conjunction with the Arizona Department of Economic Security.

B. All measures must be determined to be eligible as cost-effective as set forth by the Weatherization Assistance Program.

## VII. PROGRAM FINANCIAL ELIGIBILITY AND CERTIFICATION REQUIREMENTS

A. Eligible Population and Certification of Eligibility

Contractor is responsible to follow the current DES LIHEAP Policy Manual requirements as it pertains to the Weatherization Program. Copies of the Policy Manual will be provided by DES.

B. Income Eligibility

1. Income level is determined by DES for LIHEAP qualification in accordance with criteria established by the Office of the Secretary, U.S. Department of Health and Human Services.
2. Households including members who have received cash assistance payments under Temporary Assistance for Needy Families (TANF) or Supplemental Security Income (SSI), are automatically eligible for Weatherization assistance.

C. Priority

Priority shall be given to identifying and providing weatherization assistance to the following households:

1. Elderly persons
2. Persons with disabilities
3. Families with children
4. High residential energy users and households with a high energy burden

## VIII. PROHIBITION AGAINST WEATHERIZATION SERVICES

Dwelling Units

1. Dwelling units which are vacant or which are designated for acquisition or clearance by a federal, state, or local program within twelve (12) months from the date of scheduled weatherization shall not be provided Weatherization services under this AGREEMENT.
2. Dwelling units which are known to be for sale as evidenced by "For Sale" signs on the property, realtor listing and offering or classified advertisement, shall not be provided Weatherization services under this AGREEMENT.

## IX. PRIOR WRITTEN APPROVAL REQUIREMENTS

Prior Written Approval from the OEP is required on the following:

1. All purchases of program vehicles or equipment over $4,999.
2. All purchase lease or lease-purchase of vehicles or equipment.
3. Weatherization training, program sessions, or workshops not sponsored by the OEP or DOE, and charged to Weatherization.
4. Adjustments to line items in the AGREEMENT budget.
5. Purchase of extended warranties for installed items on client homes.
6. Weatherization of all rental properties of four (4) or more units.
7. Replacement or repair of items in a rental unit that are the responsibility of the landlord under A.R.S. § 33-1324.
8. Specific references to written approval requirements listed in the latest edition of the Program Requirements, attached as Exhibit B.
9. Services for new additions or residences in varying stages of new construction or remodeling, or for garage/carport conversions in progress. Low-Income Weatherization services are for existing residential buildings only.
10. Homes that have been weatherized after September 30, 1994 and reported to the OEP for contract credit.

## X. ELIGIBILITY FOR STATE OR LOCAL PUBLIC BENEFITS; DOCUMENTATION AND VIOLATIONS

Contractors providing services as an agent the State, shall ensure compliance with A.R.S. §1-502. A.R.S. §1-502 requires each person applying or receiving a public benefit to provide documented proof which demonstrates a lawful presence in the United States. The State shall reserve the right to conduct unscheduled, periodic process and documentation audits to ensure contractor compliance. All available contract remedies, up to and including termination may be taken for failure to comply with A.R.S. §1-502 in the delivery of services under this AGREEMENT.

## XI. HISTORIC PRESERVATION:

Prior to the expenditure of Federal funds to alter any structure or site, the Contractor is required to comply with the requirements of Section 106 of the National Historic Preservation Act (NHPA), consistent with DOE's 2009 letter of delegation of authority regarding the NHPA. Section 106 applies to historic properties that are listed in or eligible for listing in the National Register of Historic Places. In order to fulfill the requirements of Section 106, the OEP and the State Historic Preservation Officer ("SHPO") have developed a Statewide Programmatic Agreement ("PA"). As long as the contractor adheres to a scope of work in conformance with this executed PA, the contractor need not perform any further Section 106 review. The Statewide Programmatic Agreement is available at: http://www.azenergy.gov/HistoricPreservation.aspx. Additional

information is also available at the U.S. Department of Energy website: http://www1.eere.energy.gov/wip/historic_preservation.html.

## XII. INVENTORY

The Contractor shall maintain a current list of all non-expendable inventory equipment, with an individual cost of $500 and over, which has a useful life of more than a year, and is available for use in Weatherization. This list shall include:

1. Description of inventory item
2. Manufacturer's serial number, model number, national stock number, or other identification number, and agency's unique tag number, if applicable.
3. Acquisition date
4. Locations, use, and condition of inventory
5. Unit acquisition cost and funding source
6. Disposition data - date and method of disposal

Contractor shall update the Program Equipment Inventory list at the end of the program year. Inventory list shall include any inventory acquisition, disposition, and condition changes during the program. Upon request by the OEP, a copy of the Contractor's Program Equipment Inventory list shall be provided.

## XIII. PROPERTY

All inventories acquired by funds provided through the OEP AGREEMENT become program property. Title to inventory acquired and defined under the AGREEMENT may vest upon expiration of the contract provided all terms and conditions of the contract have been met. This is pursuant to Office of Management and Budget ("OMB") Circular A-102, and 10 C.F.R. § 600.232(A) (1996).

The Contractor shall indicate Weatherization Program ownership, maintain reasonable control, and be responsible for the proper care and maintenance of all inventories acquired through an AGREEMENT with the OEP. Equipment and vehicles no longer required for program operation shall be reported to the OEP prior to disposition. When the AGREEMENT is terminated, the disposition of all inventory acquired with AGREEMENT funds shall be determined as follows:

A. The OEP may allow continued use of program inventory provided that a new AGREEMENT is executed and the inventory continues to be used as originally intended.

B. The OEP may sell inventory to the Contractor, at fair market value, if the Contractor wishes to utilize the inventory for purposes other than for which it was acquired. Fair market value will be determined by the OEP.

C. The OEP may take possession of the inventory.

## XIV. CLIENT FILE REQUIREMENTS

A. Separate File

A separate file shall be maintained for each household receiving Weatherization assistance under the terms of this AGREEMENT. The client file shall be retained by the Contractor for a minimum of five years and be available for inspection by representatives of the OEP with reasonable advance notification.

B. Program Application Form
A copy of the signed application form must be retained in the client file. Applicants qualifying for Weatherization will be notified of program eligibility.

C. Fuel Information Release Form
A fuel information release form signed by the applicant to allow the Contractor or the OEP to obtain a utility history for all metered fuels purchased by the applicant household. Refusal to sign fuel information release does not affect weatherization services available to applicants. If fuel information release is not signed by applicant, do not list utility account number on the Weatherization Program Database Website. Applicants who are on a "master metered" system are not required to sign the fuel information release form.

D. Rental Properties
Rental properties may be weatherized under the terms of this AGREEMENT. **Prior written approval is required by the OEP for all rental properties of four (4) or more units.** Written permission to perform itemized services must be obtained from the owner of the rental unit or the owner's authorized agent. Said written permission is to be retained along with such other agreements between the Contractor and the rental owner/agent, as part of the job record and client job file.

1. The owner of the rental property or the owner's agent shall agree in writing prior to performing the work, with a stipulation that the rental charge of said dwelling will not be increased for a minimum period of one year from the date of completion of Weatherization services as a consequence of the Weatherization investment.
2. The landlord is required to maintain fit premises pursuant to A.R.S. § 33-1324 (A)(4). The Contractor must obtain written permission from the OEP prior to repairing or replacing any items in the rental property the landlord is required to maintain.

## SPECIAL TERMS AND CONDITIONS

### XV. DUNS/CCR

The Contractor is required to provide a Dun and Bradstreet Data Universal Numbering System (DUNS) number for the fiscal agent; and proof of current registration in the Central Contractor Registration (CCR) database. Additionally, CCR registration must be maintained for the term of the AGREEMENT. The DUNS website is located at http://fedgov.dnb.com/webform. The CCR registration information may be found at https://www.bpn.gov/ccr/default.aspx.

### XVI. FFATA REPORTING REQUIREMENTS

In compliance with the Federal Funding Accountability and Transparency Act of 2006 Reporting Requirements, (Pub. L. No. 109-282, as amended by Section 6205 (a) of Pub. L. No. 110-252), the Contractor is required to provide information, as applicable, in Exhibit C, incorporated by reference and attached. The FFATA legislation requires information on federal awards (federal financial assistance and expenditures) be made available to the public via a single, searchable website, which is www.USASpending.gov

### XVII. SINGLE AUDIT:

In compliance with the Single Audit Act of 1984 (Pub L. No. 98-502, as amended by Pub. L. No. 104-156, which is codified at 31 U.S.C. 7501-7507), grant sub-recipients organizations expending $500,000 or more of Federal funds from all sources during the organization's fiscal year, must have an annual audit conducted in accordance with OMB Circular A-133.

If your organization is subject to the annual audit requirements, then submit two copies of your organization's most recently completed audit in accordance with OMB Circular A-133 and the Management Letter, Findings and Questioned Costs to the OEP.

If your organization is not subject to OMB Circular A-133, submit two copies of the most recently completed audit of financial statements, with the Management Letter, Findings and Questioned Costs to the OEP.

If your organization does not have a recently completed audit, submit the most recently prepared financial statements including a Balance Sheet, Income Statement, and Statement of Cash Flows along with a description of the source of the documents to the OEP.

**XVII. MONITORING REQUIREMENTS:**

Contractor acknowledges that requirements may change as governmental regulations change and assures that it will comply with applicable reporting and operational requirements related to the programmatic and financial performance of this grant.

**XIX. AUDIT TRAILS:**

Contractor shall maintain proper audit trails for all reports related to this AGREEMENT. The OEP reserves the right to review all program records, including fiscal and programmatic records.

**XX. FUND MANAGEMENT:**

The Contractor must maintain funds received under this AGREEMENT in separate ledger accounts and cannot mix these funds with other sources. Contractor must manage funds according to applicable federal regulations for administrative requirements, cost principles and audits.

The Contractor must maintain adequate business systems to comply with Federal requirements. The business systems that must be maintained are:

Financial Management
Procurement
Personnel
Property
Travel

A system is adequate if it is: 1) ***written***; 2) ***consistently followed*** – it applies in all similar circumstances; and 3) ***consistently applied*** – it applies to all sources of funds. The OEP reserves the right to review all business systems policies.

**XXI. FISCAL RESPONSIBILITY**

It is understood and agreed that the total amount of the funds used under this AGREEMENT shall be used for the project(s) outlined in this AGREEMENT. Therefore, should the project not be completed, be partially completed, or be completed at a lower cost than the original budget called for, the amount reimbursed to the Contractor shall be for only the amount of dollars actually spent by the Contractor. For any funds received under this AGREEMENT for which the expenditure is disallowed by an audit exception by the OEP, the State or Federal government, the Contractor shall reimburse said funds directly to the OEP immediately, but not later than fifteen (15) business days, exclusive of state holidays.

## XXI. INDEMNIFICATION:

Each party (as "Indemnitor") agrees to indemnify, defend, and hold harmless the other party (as "Indemnitee") from and against any and all claims, losses, liability, costs, or expenses (including reasonable attorney's fees) (hereinafter collectively referred to as "Claims") arising out of bodily injury of any person (including death) or property damage, but only to the extent that such Claims which result in vicarious/derivative liability to the Indemnitee are caused by the act, omission, negligence, misconduct, or other fault of the Indemnitor, its officers, officials, agents, employees, or volunteers.

In addition, the other governmental entity shall cause its contractor(s) and subcontractors, if any, to indemnify, defend, save and hold harmless the State of Arizona, any jurisdiction or agency issuing any permits for any work arising out of this AGREEMENT, and their respective directors, officers, officials, agents, and employees (hereinafter referred to as "Indemnitee") from and against any and all claims, actions, liabilities, damages, losses, or expenses (including court costs, attorneys' fees, and costs of claim processing, investigation and litigation) (hereinafter referred to as "Claims") for bodily injury or personal injury (including death), or loss or damage to tangible or intangible property caused, or alleged to be caused, in whole or in part, by the negligent or willful acts or omissions of the other governmental entity's contractor or any of the directors, officers, agents, or employees or subcontractors of such contractor. This indemnity includes any claim or amount arising out of or recovered under the Workers' Compensation Law or arising out of the failure of such contractor to conform to any federal, state or local law, statute, ordinance, rule, regulation or court decree. It is the specific intention of the parties that the Indemnitee shall, in all instances, except for Claims arising solely from the negligent or willful acts or omissions of the Indemnitee, be indemnified by such contractor from and against any and all claims. It is agreed that such contractor will be responsible for primary loss investigation, defense and judgment costs where this indemnification is applicable.

## XXII. INSURANCE REQUIREMENTS

The Contractor and subcontractors shall procure and maintain until all of their obligations have been discharged, including any warranty periods under this AGREEMENT, are satisfied, insurance against claims for injury to persons or damage to property which may arise from or in connection with the performance of the work hereunder by the Contractor, his agents, representatives, employees or subcontractors.

The insurance requirements herein are minimum requirements for this AGREEMENT and in no way limit the indemnity covenants contained in this AGREEMENT. The State of Arizona in no way warrants that the minimum limits contained herein are sufficient to protect the Contractor from liabilities that might arise out of the performance of the work under this AGREEMENT by the Contractor, its agents, representatives, employees or subcontractors, and Contractor is free to purchase additional insurance.

### A. MINIMUM SCOPE AND LIMITS OF INSURANCE

Contractor shall provide coverage with limits of liability not less than those stated below. Within ten (10) business days following notification of award, certificates of insurance must be submitted to the OEP, clearly stating the applicable contract number, effective date(s) of coverage, and limits of liability required pursuant to the AGREEMENT.

**1. Commercial General Liability – Occurrence Form**

Policy shall include bodily injury, property damage, personal injury and broad form contractual

liability coverage.

| | |
|---|---|
| • General Aggregate | $2,000,000 |
| • Products – Completed Operations Aggregate | $1,000,000 |
| • Personal and Advertising Injury | $1,000,000 |
| • Blanket Contractual Liability – Written and Oral | $1,000,000 |
| • Fire Legal Liability | $ 50,000 |
| • Each Occurrence | $1,000,000 |

a. The policy shall be endorsed to include the following additional insured language: ***"The State of Arizona, its departments, agencies, boards, commissions, universities and its officers, officials, agents, and employees shall be named as additional insureds with respect to liability arising out of the activities performed by or on behalf of the Contractor".***

b. Policy shall contain a waiver of subrogation against the State of Arizona, its departments, agencies, boards, commissions, universities and its officers, officials, agents, and employees for losses arising from work performed by or on behalf of the Contractor.

**2. Business Automobile Liability**

Bodily Injury and Property Damage for any owned, hired, and/or non-owned vehicles used in the performance of this AGREEMENT.

| | |
|---|---|
| Combined Single Limit (CSL) | $1,000,000 |

a. The policy shall be endorsed to include the following additional insured language: ***"The State of Arizona, its departments, agencies, boards, commissions, universities and its officers, officials, agents, and employees shall be named as additional insureds with respect to liability arising out of the activities performed by or on behalf of the Contractor, involving automobiles owned, leased, hired or borrowed by the Contractor".***

b. Policy shall contain a waiver of subrogation against the State of Arizona, its departments, agencies, boards, commissions, universities and its officers, officials, agents, and employees for losses arising from work performed by or on behalf of the Contractor.

**3. Worker's Compensation and Employers' Liability**

| | |
|---|---|
| Worker's Compensation | Statutory |
| Employer's Liability | |
| Each Accident | $ 500,000 |
| Disease – Each Employee | $ 500,000 |
| Disease – Policy Limit | $1,000,000 |

a. Policy shall contain a waiver of subrogation against the State of Arizona, its departments, agencies, boards, commissions, universities and its officers, officials, agents, and employees for losses arising from work performed by or on behalf of the Contractor.

b. This requirement shall not apply to: Separately, EACH CONTRACTOR or subcontractor exempt under A.R.S. §23-901, AND when such CONTRACTOR or subcontractor executes the appropriate waiver (Sole Proprietor/Independent Contractor) form.

**4. Professional Liability (Errors and Omissions Liability)**

| | |
|---|---|
| Each Claim | $1,000,000 |
| Annual Aggregate | $2,000,000 |

a. In the event that the professional liability insurance required by this AGREEMENT is written on a claims-made basis, Contractor warrants that any retroactive date under the policy shall precede the effective date of this AGREEMENT; and that either continuous coverage will be maintained or an extended discovery period will be exercised for a period of two (2) years beginning at the time work under this AGREEMENT is completed.
b. The policy shall cover professional misconduct or lack of ordinary skill for those positions defined in the Scope of Work of this AGREEMENT.

## B. ADDITIONAL INSURANCE REQUIREMENTS

The policies shall include, or be endorsed to include, the following provisions:

1. The State of Arizona, its departments, agencies, boards, commissions, universities and its officers, officials, agents, and employees wherever additional insured status is required. Such additional insured shall be covered to the full limits of liability purchased by the Contractor, even if those limits of liability are in excess of those required by this AGREEMENT.
2. The Contractor's insurance coverage shall be primary insurance with respect to all other available sources.
3. Coverage provided by the Contractor shall not be limited to the liability assumed under the indemnification provisions of this AGREEMENT.

## C. NOTICE OF CANCELLATION

With the exception of ten (10) day notice of cancellation for non-payment of premium, any changes material to compliance with this AGREEMENT in the insurance policies above shall require thirty (30) days written notice to the State of Arizona. Each insurance policy required by the insurance provisions of this AGREEMENT shall provide the required coverage and shall not be suspended, voided, canceled, or reduced in coverage or in limits. Such notice shall be sent directly to The Governor's Office of Energy Policy, Evelyn Billings, Grants Administrator, 1700 West Washington, Suite 220, Phoenix, AZ 85007 and shall be sent by certified mail, return receipt requested.

## D. ACCEPTABILITY OF INSURERS

Insurance is to be placed with duly licensed or approved non-admitted insurers in the state of Arizona with an "A.M. Best" rating of not less than A- VII. The State of Arizona in no way warrants that the above-required minimum insurer rating is sufficient to protect the Contractor from potential insurer insolvency.

### E. VERIFICATION OF COVERAGE

Contractor shall furnish the State of Arizona with certificates of insurance (ACORD form or equivalent approved by the State of Arizona) as required by this AGREEMENT. The certificates for each insurance policy are to be signed by a person authorized by that insurer to bind coverage on its behalf.

All certificates and endorsements are to be received and approved by the State of Arizona before work commences. Each insurance policy required by this AGREEMENT must be in effect at or prior to commencement of work under this AGREEMENT and remain in effect for the duration of the project. Failure to maintain the insurance policies as required by this AGREEMENT, or to provide evidence of renewal, is a material breach of contract.

All certificates required by this AGREEMENT shall be sent directly to Evelyn Billings, Grants Administrator, the Governor's Office of Energy Policy, 1700 W. Washington, Suite 220, Phoenix, AZ 85007. The State of Arizona project/contract number and project description shall be noted on the certificate of insurance. The State of Arizona reserves the right to require complete, certified copies of all insurance policies required by this AGREEMENT at any time. DO NOT SEND CERTIFICATES OF INSURANCE TO THE STATE OF ARIZONA'S RISK MANAGEMENT DIVISION.

### F. SUBCONTRACTORS

Contractor's certificate(s) shall include all subcontractors as insureds under its policies or Contractor shall furnish to the State of Arizona separate certificates and endorsements for each subcontractor. All coverages for subcontractors shall be subject to the minimum requirements identified above.

### G. APPROVAL

Any modification or variation from the insurance requirements in this AGREEMENT shall be made by the Department of Administration, Risk Management Division, whose decision shall be final. Such action will not require a formal AGREEMENT amendment, but may be made by administrative action.

### H. EXCEPTIONS

In the event the Contractor or subcontractor(s) is/are a public entity, then the Insurance Requirements shall not apply. Such public entity shall provide a Certificate of Self-Insurance. If the Contractor or subcontractor(s) is/are a State of Arizona agency, board, commission, or university, none of the above shall apply.

## XXIV. POLLUTION OCCURRENCE INSURANCE

If working with pollutants or any remediation exposures are part of the project then Pollution Occurrence Insurance ("POI") shall be added as a part of, or an addendum to, general liability insurance by Contractor and all subcontractors. If Contractor or subcontractors do NOT obtain POI coverage and damage occurs because of not following all aspects of Lead Safe Weatherization, or there is disturbance to any other environmental pollutants, the cost to do

remediation, clean up, relocation, medical expenses or any other resulting costs may not be charged to DOE Weatherization and must be covered by another funding mechanism.

## XXV. AMENDMENTS OR MODIFICATIONS

A. This AGREEMENT may be modified only through a written Amendment within the scope of the AGREEMENT, except as provided in (B) and (C) of this section. Changes to the AGREEMENT, including the addition of work or materials, the revision of payment terms, or the substitution of work or materials, directed by a person who is not specifically authorized by OEP in writing or made unilaterally by the Contractor are violations of the AGREEMENT and of applicable law. Such changes, including unauthorized written Amendments shall be void and without effect, and the Contractor shall not be entitled to any claim under this AGREEMENT based on those changes.

B. Either party shall give written notice to the other party of the following alterations that do not require a written amendment:

1. Change of Address
2. Change of telephone number
3. Change in authorized signatory
4. Change in the name and/or related contact information of the person to whom notices are to be sent.

C. Without limit, Administration Costs funds may be moved to Program Operations as long the Budget Total is not exceeded as listed in Exhibit A - Budget. Any change shall be made in consultation with and approved in writing by the OEP Weatherization Program Manager but shall not require a formal amendment.

## XXVI. SUBCONTRACTORS

The Contractor understands and agrees that no subcontract that the Contractor enters into shall in any way relieve the Contractor of any responsibility for performance of duties. Notwithstanding anything to the contrary contained in this AGREEMENT, the Contractor is not an employee or agent of the OEP. In the event the Contractor elects to retain a subcontractor, the Contractor hereby agrees to hold harmless, indemnify and defend the OEP, the State of Arizona, their officers, agents, employees, successors and assigns for any payment, loss, claim or liability including but not limited to, attorney fees associated with any subcontract entered into by the Contractor.

## XXVII. LOBBYING

The Contractor shall not pay for, influence, or seek to influence any officer or employee of the State of Arizona or the federal government if that action may have an impact, of any nature, on this AGREEMENT.

## XXVIII. APPLICABLE LAW

All parties to this AGREEMENT shall comply with all applicable federal, state and local laws.

**XXIX. LICENSES**

Contractor shall maintain in current status all federal, state and local licenses and permits required for the operation of the business conducted by the Contractor.

**XXX. NON-AVAILABILITY OF FUNDS**

In accordance with A.R.S. §35-154, every payment obligation of the State under the AGREEMENT is conditioned upon the availability of funds appropriated or allocated for payment of such obligation. If funds are not allocated and available for the continuance of this AGREEMENT, this AGREEMENT may be terminated by the State at the end of the period for which funds are available. No liability shall accrue to the State in the event this provision is exercised, and the State shall not be obligated or liable for any future payments or for any damages as a result of termination under this paragraph, including purchases and/or contracts entered into by the Contractor in support of this AGREEMENT.

Funds are not presently available for performance under this AGREEMENT beyond the current fiscal year. No legal liability on the part of the OEP for any payment may arise for performance under this AGREEMENT beyond the current fiscal year until funds are made available for performance of this AGREEMENT.

**XXXI. ARBITRATION**

In accordance with A.R.S. §12-1518, the parties agree to resolve all disputes arising out of or relating to this AGREEMENT through arbitration, after exhausting applicable administrative review except as may be required by other applicable statutes.

**XXXII. INVALIDITY OF PART OF THIS AGREEMENT**

The parties agree that should any part of this AGREEMENT be held to be invalid or void, the remainder of the AGREEMENT shall remain in full force and effect and shall be binding upon the parties.

**XXXIII. CANCELLATION FOR CONFLICT OF INTEREST**

Pursuant to A.R.S. § 38-511, the state, its political subdivisions or any department or agency of either may, within three years after its execution, cancel any AGREEMENT, without penalty or further obligation, made by the state, its political subdivisions, or any of the departments or agencies of either if any person significantly involved in initiating, negotiating, securing, drafting or creating the AGREEMENT on behalf of the state, its political subdivisions or any of the departments or agencies of either is, at any time while the AGREEMENT or any extension of the AGREEMENT is in effect, an employee or agent of any other party to the AGREEMENT in any capacity or a consultant to any other party of the AGREEMENT with respect to the subject matter of the AGREEMENT. A cancellation made pursuant to this provision shall be effective when the Contractor receives written notice of cancellation unless the notice specifies a later time.

**XXXIV. AUDIT OF RECORDS**

Pursuant to A.R.S. §§ 35-214 and 35-215, the Contractor shall retain and shall contractually require each subcontractor to retain all data, books, and other records ("records") relating to this AGREEMENT for a period of five years after completion of the AGREEMENT. All records shall be subject to inspection and audit by the State at reasonable times. Upon request, the Contractor shall produce the original of any or all such records. The Contractor shall require all subcontractors to abide by this provision during the term of the AGREEMENT.

**XXXV. SUSPENSION OR DEBARMENT CERTIFICATION:**

By signing the AGREEMENT, the Contractor certifies that the firm, business or person acting as a subcontractor has not been debarred, suspended or otherwise lawfully been precluded from participating in any public procurement activity with any federal, state or local government. Signing the AGREEMENT without disclosing all pertinent information about a debarment or suspension shall result in rejection of the AGREEMENT or cancellation of the AGREEMENT. The OEP may exercise any other remedy available by law.

**XXXVI. TERMINATION:**

The OEP reserves the right to terminate the AGREEMENT at any time, in whole or in part at any time when in the best interest of the State, without penalty or recourse. Upon receipt of the written notice, the Contractor shall stop all work, as directed in the notice, notify all subcontractors of the effective date of the termination and minimize all further costs to the State. In the event of termination pursuant to this paragraph, all documents, data, and reports prepared by the Contractor under the AGREEMENT shall become the property of and be delivered to the State upon demand. The Contractor shall be entitled to receive just and equitable compensation for work in progress, work completed and materials accepted before the effective date of termination. The cost principles and procedures provided in A.A.C. R2-7-701 shall apply.

**XXXVII. NON-DISCRIMINATION**

The Contractor shall comply with State Executive Order No. 2009-09 and all other applicable Federal and State laws, rules and regulations, including the Americans with Disabilities Act. The Contractor shall require all subcontractors to abide by this provision during the term of the AGREEMENT.

**XXXVIII. THIRD PARTY ANTITRUST VIOLATIONS**

The Contractor assigns to the OEP any claim for overcharges resulting from antitrust violations to the extent that such violations concern materials or services supplied by third parties to the Contractor toward fulfillment of this AGREEMENT.

**XXXIX. PROGRAM REVIEW AND SITE VISITS**

The OEP has the right to make site visits at reasonable intervals for purposes of review of project accomplishments and management control systems and to provide technical assistance, if required. Contractor will provide reasonable access to facilities, office space, resources, and assistance for the safety and convenience to the OEP representatives in the performance of their duties. All site visits and evaluations must be performed in a manner that does not unduly interfere with or delay the work.

**XL. RIGHTS IN DATA**

The OEP may duplicate, use, and disclose in any manner and for any purpose whatsoever, within the limits established by Federal and State laws and regulations, all information relating to this AGREEMENT.

**XLI. HEALTH & SAFETY**

The nature of the work to be performed under this AGREEMENT is inherently hazardous. In performance of work under this AGREEMENT, the Contractor shall satisfy all federal, state, and local statutes, regulations, ordinances, etc., regarding health and safety.

XLII. **OCCUPATIONAL SAFETY AND HEALTH ACT ("OSHA") GUIDELINES**

The Contractor or Subcontractor conducting activities to fulfill the requirements of the Weatherization Low-Income Assistance project must be in compliance with the requirements and shall operate with the guidelines set forth by OSHA (Pub. L. No. 91-596, which is codified at 29 U.S.C. 651-678).

XLIII. **ENTIRE AGREEMENT**

This AGREEMENT, including exhibits, attachments, and modifications approved in accordance herewith, shall constitute the entire AGREEMENT between the parties and supersede all understandings, oral or written.

XLIV. **OFFSHORE PERFORMANCE OF WORK PROHIBITED**

Any services that are described in the specifications or scope of work that directly serve the State of Arizona or its clients and involve access to secure or sensitive data or personal client data shall be performed within the defined territories of the United States. Unless specifically stated otherwise in the specifications, this paragraph does not apply to indirect or "overhead" services, redundant back-up services or services that are incidental to the performance of the AGREEMENT. This provision applies to work performed by subcontractors at all tiers. Contractor shall declare all anticipated offshore services to the OEP.

XLV. **FEDERAL IMMIGRATION AND NATIONALITY ACT**

The Contractor shall comply with all federal, state and local immigration laws and regulations relating to the immigration status of their employees during the term of the AGREEMENT. The State shall retain the right to perform random audits of the Contractor and subcontractor records or to inspect papers of any employee thereof to ensure compliance. Should the State determine that the Contractor and/or any subcontractors be found noncompliant, the State may pursue all remedies allowed by law, including, but not limited to: suspension of work, termination of the AGREEMENT for default and suspension and/or debarment of the Contractor. The Contractor shall require all subcontractors to abide by this provision during the term of the AGREEMENT.

XLVI. **E-VERIFY REQUIREMENT**

The contractor warrants compliance with all Federal immigration laws and regulations relating to employees and warrants its compliance with Section A.R.S. § 23-214, Subsection A. (That subsection reads: "After December 31, 2007, every employer, after hiring an employee, shall verify the employment eligibility of the employee through the E-Verify program.) A breach of a warranty regarding compliance with immigration laws and regulations shall be deemed a material breach of the AGREEMENT and the contractor may be subject to penalties up to and including termination of the AGREEMENT. Failure to comply with a State audit process to randomly verify the employment records of contractors and subcontractors shall be deemed a material breach of the AGREEMENT and the contractor may be subject to penalties up to and including termination of the AGREEMENT. OEP retains the legal right to inspect the papers of any employee who works on the AGREEMENT to ensure that the contractor or subcontractor is complying with the warranty. The Contractor shall require all subcontractors to abide by this provision during the term of the AGREEMENT.

Questions about E-Verify see website below:
http://www.uscis.gov/portal/site/uscis/menuitem.eb1d4c2a3e5b9ac89243c6a7543f6d1a/?vgnextoid=6a0988e60a405110VgnVCM100000471819 0aRCRD&vgnextchannel=6a0988e60a405110VgnVCM100000471819 0aRCRD

**XLVII. SCRUTINIZED BUSINESSES**

In accordance with A.R.S. §35-391 and A.R.S. §35-393, Contractor certifies that the Contractor does not have scrutinized business operations in Sudan or Iran. The Contractor shall require all subcontractors to abide by this provision during the term of the AGREEMENT.

**XLVIII. ATTORNEY FEES**

In any litigation arising out of this Agreement, each party shall bear all of its own attorneys' fees.

**XLIX. NOTICES**

All notices, demands, and communications provided for herein or made hereunder shall be delivered, or sent by certified mail, return receipt requested, addressed in each case as follows, until some other address shall have been designated in a written notice to the other party hereto given in like manner:

**If to CONTRACTOR:**
Gila County
Office of Community Services
5515 South Apache Avenue, Suite 200
Globe, AZ 85501

Contractual/Financial Contact
Malissa Buzan
Housing Services Manager
PHONE 928-402-8693
FAX 928-425-9468
EMAIL mbuzan@co.gila.az.us

Program/Technical Contact
Malissa Buzan
Housing Services Manager
PHONE 928-402-8693
FAX 928-425-9468
EMAIL mbuzan@co.gila.az.us

**If to the OEP:**
The Governor's Office of Energy Policy
1700 W. Washington, Suite 220
Phoenix, AZ 85007

Contractual/Financial Contact
Evelyn Billings
Grants Administrator
PHONE 602-771-1141
FAX 602-771-1203
EMAIL ebillings@az.gov

Program/Technical Contact
OEP Assigned Auditor

Each notice shall be deemed to have been given or made when so delivered or mailed. Notification of change shall be delivered to the OEP and Contractor within ten (10) days of any change affecting this provision.

**IN WITNESS WHEREFORE,** the parties hereto have executed this AGREEMENT.

STATE OF ARIZONA
GOVERNOR'S OFFICE OF ENERGY POLICY

By _____ Date: 9/7/11
**Leisa B. Brug**
**Director**
**Or Authorized Signatory**

_____ Date: 9/8/11
**Travis Price**
**Compliance, Finance & Procurement Manager**
**Office of the Governor**

GILA COUNTY

_____ Date: 10/3/11
**Board of Supervisors**
**Chairman**
Tommie C. Martin
Printed name

Chief Deputy County Attorney

_____ 3 Oct 2011
Signature Date

Bryan B. Chambers
Printed name

| Exhibit A - Budget | |
|---|---|
| **GILA COUNTY** | |
| **LIHEAP Weatherization Program Budget** | |
| **OEP Contract Number LW-ESA-12-2182-02** | **LIHEAP TOTAL BUDGET** |
| **Contract term to 6-30-2012** | |
| **1. Administration Costs** | $7,142.00 |
| **2. Program Operations** | $128,551.00 |
| | |
| | |
| **Budget Total** | **$135,693.00** |

EXHIBIT B

# WEATHERIZATION

# PROGRAM REQUIREMENTS

JULY 1, 2009
EDITION

## INDEX


**INSTALLATION MEASURES** 1

**ENERGY AUDIT PROCEDURE** 1

**COST EFFECTIVENESS PROCEDURE** 1

**CLIMATE ZONES** 2

**FUEL SWITCHING** 2

**COST EFFECTIVENESS PRIORITY LISTS**
- Detached Housing 3-8
  - Climate Zones 1 - 2 - 3 - 4 - 5 - 6
- Mobile Homes 9-14
  - Climate Zones 1 - 2 - 3 - 4 - 5 - 6

**GENERAL WASTE HEAT ITEMS** 15
- Domestic Hot Water
- Space Heating and Cooling Systems
- Existing Evaporative Cooler

**DOOR REPLACEMENT** 15

**DURABILITY MEASURES** 15

**PRESSURE DIAGNOSTIC PROCEDURE** 15-17
- Level One: Homes with Central Forced Air Heating or Cooling
- Level Two: Homes with No Central Force Air Heating or Cooling
- Testing Procedure
  - Initial Air Leakage and Room Pressure Tests
  - Duct Repair Procedure
  - Envelope Air Sealing Procedure
  - Room Pressure Balancing
- Economics
- Infiltration
- Duct Leakage

**COMBUSTION SAFETY AND CARBON MONOXIDE PROCEDURE** 17-19
- Carbon Monoxide Tests
- Spillage and Draft Tests
- Acceptable Draft Test Ranges
- Acceptable Appliance Spillage Periods
- Gas Supply Safety
- Combustion Air
- Heat Exchanger Safety Checks

**HVAC EQUIPMENT & DISTRIBUTION INSTALLATION/REPAIR POLICY** 19-20
- Repair /Replacement
- Sizing and Installing HVAC Equipment
- Evaporative Cooler Installation
- Installation of Forced Air Distribution Systems

Repair of Existing Air Distribution Systems
Duct Installation/Repair Techniques
Duct Product Guidelines

**INSULATION STANDARDS** **21**

**RENEWABLES** **21-22**
Cost Effectiveness
Product Guidelines

**FINAL INSPECTION REQUIREMENTS** **22**

**HEALTH AND SAFETY PLAN** **22-33**
**Section D.6** - Lead Paint ***(new)*** Pages 26-32
- Lead Safe Weatherization (LSW)
- Exemptions
- Testing for lead-based paint and lead-based residues
- U.S. Department of Energy Minimum Standards for LSW
  - Requirements
  - General LSW Work Practice Standards
  - Containment
  - Proper LSW Clean-Up and Disposal
- Deferrals
- Funding of LSW
- Liability Issues
- Training

**REFRIGERATOR REPLACEMENT POLICY** **33-35**
Eligibility for Replacement
Metering Requirements
Materials
Installation
Disposal
Reporting
Written Authorization

## INSTALLATION MEASURES

All materials/measures installed shall be justified utilizing the Energy Audit Procedures established by the Governor's Office of Energy Policy(OEP).

## ENERGY AUDIT PROCEDURE

The Weatherization Assistance Program (WAP) Energy Audit Procedure is to be used by all sub-grantees to gather record and analyze data on structures. This data is to be used to deliver weatherization materials/measures in a fashion that protects the health and safety of the client, increases the durability of the structure, increases the comfort of the client and reduces the energy cost to the client in a cost effective manner.

The following audit activities must be completed on all homes utilizing WAP funds.

- A site audit is to be completed that records all of the relevant data on the structure that is needed to perform cost effectiveness tests.
- The Cost Effectiveness Procedure must be followed to determine cost effectiveness of potential weatherization materials/measures.
- The Pressure Diagnostic Procedure must be completed and the findings documented following the Reporting procedures.
- A health and safety audit of the structures must be completed and the findings documented following the Reporting procedures.
- A final inspection of the structure must be completed and findings documented following the Final Inspection Procedures.

## COST EFFECTIVENESS PROCEDURE

WAP has incorporated a performance-based energy audit procedure that focuses on optimizing investment in energy efficiency through a systems approach. To enable the WAP program to optimize the investment in energy efficiency, the following requirements have been established for the audit procedure:

- The energy audit procedure must determine that each weatherization material/measure is cost effective by ensuring the discounted savings-to-investment ratio (SIR) is greater or equal to one.
- The energy audit procedure must assign priorities among weatherization materials/measures in descending order of SIR and must account for interactions between architectural and mechanical measures.
- The energy audit procedure must ensure that the overall SIR for the entire package of materials/measures, including the cost of incidental repairs, is greater or equal to one. Incidental repairs are only allowed if they are necessary to make the installation of weatherization materials effective.
- Funds spent to abate energy related health and safety hazards do not need to be included in the preceding requirements. Funds can be spent to eliminate health and safety hazards when the elimination of the hazard is necessary before or because of the installation of weatherization materials.
- Written authorization must be received from the OEP before the installation of measures/materials that do not meet the Cost Effectiveness or Health and Safety Requirements established by the WAP program.

To determine the cost effectiveness of weatherization materials/measures, the contractor must use a computer audit approved by the OEP or an appropriate priority list for homes that meet the criteria contained in the list.

**CLIMATE ZONES**

Arizona Climate Zones used for the Cost Effective Priority Lists can be found at http://www.azenergy.gov

**FUEL SWITCHING**

The Weatherization Assistance Program does not permit the general practice of fuel switching when replacing heating, cooling or water heating equipment. The changing or converting equipment using one fuel source to another will be considered on a limited case-by-case basis only.

Written authorization must be received from the OEP prior to changing or converting equipment using one fuel source to another.

## COST EFFECTIVENESS PRIORITY LIST FOR DETACHED HOUSING

### CLIMATE ZONE 1

The priority list can be used to determine cost effective weatherization materials/measures for homes located in Climate Zone 1 (see Climate Zone map).

A computer audit is required if:

- There are potential cost-effective energy upgrades to the house that are not listed on the priority list or the General Waste Heat Items list.
- There are not sufficient funds to complete all the measures; including energy related health and safety measures and other energy related repairs.
- Energy related incidental repairs of more than $100 are included with the energy upgrades.

**Homes with Fossil Fuel Heating**

- Existing ceiling insulation of R-19 or less upgraded to R-38.
- Un-insulated frame walls upgraded with blown insulation.
- Pressure diagnostics and repair following the pressure diagnostic procedure established by the WAP program.
- Forced air furnace with a standing pilot light upgraded to a 90+ AFUE furnace.
- Water heater wrap (where allowed).

**Homes Electric Heating (Heat Pump or Electric Resistance)**

- Existing ceiling insulation of R-19 or less upgraded to R-38.
- Un-insulated frame walls upgraded with blown insulation.
- Pressure diagnostics and repair following the pressure diagnostic procedure established by the WAP program.
- Water heater wrap (where allowed).

In cases where there are potential cost effective energy upgrades not listed, incidental repairs of more than $100, or sufficient funds are not available to complete **all** (energy, health and safety and energy related repairs) possible upgrades, a computerized audit must be completed to develop a ranking of the energy upgrades, based on their SIR. Only those measures with a SIR of one or greater can be completed. If sufficient funds are not available to complete all possible upgrades, those upgrades with the highest SIR must be completed first.

## COST EFFECTIVENESS PRIORITY LIST FOR DETACHED HOUSING

### CLIMATE ZONE 2

The priority list can be used to determine cost effective weatherization materials/measures for homes located in Climate Zone 2 (see Climate Zone map).

A computer audit is required if:

- There are potential cost-effective energy upgrades to the house that are not listed on the priority list or the General Waste Heat Items list.
- There are not sufficient funds to complete all the measures; including energy related health and safety measures and other energy related repairs.
- Energy related incidental repairs of more than $100 are included with the energy upgrades.

**Homes with Refrigeration Cooling**

- Existing ceiling insulation of R-19 or less upgraded to R-30.
- Un-insulated frame walls upgrade with blown insulation.
- Pressure diagnostics and repair following the pressure diagnostic procedure established by the WAP program.
- Air Conditioners twenty years old or older upgraded with a minimum 13 SEER unit.
- Shade screens on all sun struck south, east and west windows and glass doors.
- Water heater wrap (where allowed).

**Homes with Evaporative Cooling**

- Existing ceiling insulation of R-11 or less upgraded to R-30.
- Pressure diagnostics and repair following the pressure diagnostic procedure established by the WAP program.
- Upgrade of evaporative cooler motor with higher efficiency two-speed motor.
- Water heater wrap (where allowed).

In cases where there are potential cost effective energy upgrades not listed, incidental repairs of more than $100 or sufficient funds are not available to complete **all** (energy, health and safety and energy related repairs) possible upgrades, a computerized audit must be completed to develop a ranking of the energy upgrades, based on their SIR. Only those measures with a SIR of one or greater can be completed. If sufficient funds are not available to complete all possible upgrades, those upgrades with the highest SIR must be completed first.

## COST EFFECTIVENESS PRIORITY LIST FOR DETACHED HOUSING

### CLIMATE ZONE 3

The priority list can be used to determine cost effective weatherization materials/measures for homes located in Climate Zone 3 (see Climate Zone map).

A computer audit is required if:

- There are potential cost-effective energy upgrades to the house that are not listed on the priority list or the General Waste Heat Items list.
- There are not sufficient funds to complete all the measures; including energy related health and safety measures and other energy related repairs.
- Energy related incidental repairs of more than $100 are included with the energy upgrades.

**Home with Fossil Fuel Heating**

- Existing ceiling insulation of R-19or less upgraded to R-38.
- Un-insulated frame walls upgraded with blown insulation.
- Pressure diagnostics and repair following the pressure diagnostic procedure established by the WAP program.
- Forced air furnace with a standing pilot light upgraded to a 90+ AFUE furnace.
- Water heater wrap (where allowed).

**Homes Electric Heating (Heat Pump or Electric Resistance)**

- Existing ceiling insulation of R-19 or less upgraded to R-38.
- Un-insulated frame walls upgraded with blown insulation.
- Pressure diagnostics and repair following the pressure diagnostic procedure established by the WAP program.
- Water heater wrap (where allowed).

In cases where there are potential cost effective energy upgrades not listed, incidental repairs of more than $100, or sufficient funds are not available to complete **all** (energy, health and safety and energy related repairs) possible upgrades, a computerized audit must be completed to develop a ranking of the energy upgrades, based on their SIR. Only those measures with a SIR of one or greater can be completed. If sufficient funds are not available to complete all possible upgrades, those upgrades with the highest SIR must be completed first.

## COST EFFECTIVENESS PRIORITY LIST FOR DETACHED HOUSING

### CLIMATE ZONE 4

The priority list can be used to determine cost effective weatherization materials/measures for homes located in Climate Zone 4 (see Climate Zone map).

A computer audit is required if:

- There are potential cost-effective energy upgrades to the house that are not listed on the priority list or the General Waste Heat Items list.
- There are not sufficient funds to complete all the measures; including energy related health and safety measures and other energy related repairs.
- Energy related incidental repairs of more than $100 are included with the energy upgrades.

**Homes with Refrigeration Cooling**

- Existing ceiling insulation of R-19 or less upgraded to R-30.
- Un-insulated frame walls upgraded with blown insulation.
- Pressure diagnostics and repair following the pressure diagnostic procedure established by the WAP program.
- Air Conditioners twenty years old or older upgraded with a minimum 13 SEER unit.
- Shade screens on all sun struck south, east and west windows and glass doors.
- Water heater wrap (where allowed).

**Homes with Evaporative Cooling**

- Existing ceiling insulation of R-11 or less upgraded to R-30.
- Pressure diagnostics and repair following the pressure diagnostic procedure established by the WAP program.
- Upgrade of evaporative cooler motor with higher efficiency two-speed motor.
- Water heater wrap (where allowed).

**Homes with Inoperable Forced Air Fossil Fuel Furnace**

- Upgraded to a 90+ AFUE furnace.

In cases where there are potential cost effective energy upgrades not listed, incidental repairs of more than $100, or sufficient funds are not available to complete **all** (energy, health and safety and energy related repairs) possible upgrades, a computerized audit must be completed to develop a ranking of the energy upgrades, based on their SIR. Only those measures with a SIR of one or greater can be completed. If sufficient funds are not available to complete all possible upgrades, those upgrades with the highest SIR must be completed first.

## COST EFFECTIVENESS PRIORITY LIST FOR DETACHED HOUSING

### CLIMATE ZONE 5

The priority list can be used to determine cost effective weatherization materials/measures for homes located in Climate Zone 5 (see Climate Zone map).

A computer audit is required if:

- There are potential cost-effective energy upgrades to the house that are not listed on the priority list or the General Waste Heat Items list.
- There are not sufficient funds to complete all the measures; including energy related health and safety measures and other energy related repairs.
- Energy related incidental repairs of more than $100 are included with the energy upgrades.

**Homes with Fossil Fuel Heating**

- Existing ceiling insulation of R-19 or less upgraded to R-38.
- Un-insulated frame walls upgraded with blown insulation.
- Pressure diagnostics and repair following the pressure diagnostic procedure established by the WAP program.
- Forced air furnace with a standing pilot light upgraded to a 90+ AFUE furnace.
- Water heater wrap (where allowed).

**Homes with Electric Heating (Heat Pump or Electric Resistance)**

- Existing ceiling insulation of R-19 or less upgraded to R-38.
- Un-insulated frame walls upgraded with blown insulation.
- Pressure diagnostics and repair following the pressure diagnostic procedure established by the WAP program.
- Water heater wrap (where allowed).

In cases where there are potential cost effective energy upgrades not listed, incidental repairs of more than $100, or sufficient funds are not available to complete **all** (energy, health and safety and energy related repairs) possible upgrades, a computerized audit must be completed to develop a ranking of the energy upgrades, based on their SIR. Only those measures with a SIR of one or greater can be completed. If sufficient funds are not available to complete all possible upgrades, those upgrades with the highest SIR must **be** completed first.

## COST EFFECTIVENESS PRIORITY LIST FOR DETACHED HOUSING

### CLIMATE ZONE 6

The priority list can be used to determine cost effective weatherization materials/measures for homes located in Climate Zone 6 (see Climate Zone map).

A computer audit is required if:

- There are potential cost-effective energy upgrades to the house that are not listed on the priority list or the General Waste Heat Items list.
- There are not sufficient funds to complete all the measures; including energy related health and safety measures and other energy related repairs.
- Energy related incidental repairs of more than $100 are included with the energy upgrades.

**Homes with Refrigeration Cooling**

- Existing ceiling insulation of R-19 or less upgraded to R-30.
- Un-insulated frame walls upgraded with blown insulation.
- Pressure diagnostics and repair following the pressure diagnostic procedure established by the WAP program.
- Air Conditioners twenty years old or older upgraded with a minimum 13 SEER unit.
- Shade screens on all sun struck south, east and west windows and glass doors.
- Water heater wrap (where allowed).

**Homes with Evaporative Cooling**

- Existing ceiling insulation of R-11 or less upgraded to R-30.
- Pressure diagnostics and repair following the pressure diagnostic procedure established by the WAP program.
- Upgrade of evaporative cooler motor with higher efficiency two-speed motor.
- Water heater wrap (where allowed).

In cases where there are potential cost effective energy upgrades not listed, incidental repairs of more than $100, or sufficient funds are not available to complete **all** (energy, health and safety and energy related repairs) possible upgrades, a computerized audit must be completed to develop a ranking of the energy upgrades, based on their SIR. Only those measures with a SIR of one or greater can be completed. If sufficient funds are not available to complete all possible upgrades, those upgrades with the highest SIR must be completed first.

## COST EFFECTIVENESS PRIORITY LIST FOR MOBILE HOMES

### CLIMATE ZONE 1

The priority list can be use to determine cost effective weatherization materials/measures for mobile homes located in Climate Zone 1 (see Climate Zone map).

A computer audit is required if:

- There are potential cost-effective energy upgrades to the house that are not listed on the priority list or the General Waste Heat Items list.
- There are not sufficient funds to complete all the measures; including energy related health and safety measures and other energy related repairs.
- Energy related incidental repairs of more than $100 are included with the energy upgrades.

**Priority list for Mobile Homes with Fossil Fuel Heating**

- Pressure diagnostics and repair following the pressure diagnostic procedure established by the WAP program.
- Jalousie windows retrofit (installed cost of under $28 per square foot).
- Upgrade of evaporative cooler motor with higher efficiency two-speed motor.
- Water heater wrap (where allowed).

**Priority list for Mobile Homes with Electric Resistance Heating**

- Pressure diagnostics and repair following the pressure diagnostic procedure established by the WAP program.
- Jalousie windows retrofit (installed cost of under $32 per square foot).
- Upgrade of evaporative cooler motor with higher efficiency two-speed motor.
- Water heater wrap (where allowed).

In cases where there are potential cost effective energy upgrades not listed, incidental repairs of more than $100, or sufficient funds are not available to complete **all** (energy, health and safety and energy related repairs) possible upgrades, a computerized audit must be completed to develop a ranking of the energy upgrades, based on their SIR. Only those measures with a SIR of one or greater can be completed. If sufficient funds are not available to complete all possible upgrades, those upgrades with the highest SIR must be completed first.

## COST EFFECTIVENESS PRIORITY LIST FOR MOBILE HOMES

## CLIMATE ZONE 2

The priority list can be use to determine cost effective weatherization materials/measures for mobile homes located in Climate Zone 2 (see Climate Zone map).

A computer audit is required if:

- There are potential cost-effective energy upgrades to the house that are not listed on the priority list or the General Waste Heat Items list.
- There are not sufficient funds to complete all the measures; including energy related health and safety measures and other energy related repairs.
- Energy related incidental repairs of more than $100 are included with the energy upgrades.

### Mobile Homes with Refrigeration Cooling

- Reflective roof coating.
- Pressure diagnostics and repair following the pressure diagnostic procedure established by the WAP program.
- Air Conditioners twenty years old or older upgraded with a minimum 13 SEER unit.
- Jalousie windows retrofit (installed cost of under $9 per square foot).
- Shade screens on all sun struck south, east and west windows and glass doors.
- Water heater wrap (where allowed).

### Mobile Homes with Evaporative Cooling and Electric Resistance Heating

- Pressure diagnostics and repair following the pressure diagnostic procedure established by the WAP program.
- Jalousie windows retrofit (installed cost of under $8 per square foot).
- Upgrade of evaporative cooler motor with higher efficiency two-speed motor.
- Water heater wrap (where allowed).

### Mobile Homes with Evaporative Cooling and Fossil Fuel Heating

- Pressure diagnostics and repair following the pressure diagnostic procedure established by the WAP program.
- Upgrade of evaporative cooler motor with higher efficiency two-speed motor.
- Jalousie windows retrofit (installed cost of under $6 per square foot).
- Water heater wrap (where allowed).

In cases where there are potential cost effective energy upgrades not listed, incidental repairs of more than $100, or sufficient funds are not available to complete **all** (energy, health and safety and energy related repairs) possible upgrades, a computerized audit must be completed to develop a ranking of the energy upgrades, based on their SIR. Only those measures with a SIR of one or greater can be completed. If sufficient funds are not available to complete all possible upgrades, those upgrades with the highest SIR must be completed first.

## COST EFFECTIVENESS PRIORITY LIST FOR MOBILE HOMES

## CLIMATE ZONE 3

The priority list can be use to determine cost effective weatherization materials/measures for mobile homes located in Climate Zone 3 (see Climate Zone map).

A computer audit is required if:

- There are potential cost-effective energy upgrades to the house that are not listed on the priority list or the General Waste Heat Items list.
- There are not sufficient funds to complete all the measures; including energy related health and safety measures and other energy related repairs.
- Energy related incidental repairs of more than $100 are included with the energy upgrades.

### Mobile Homes with Refrigeration Cooling and Fossil Fuel Heating

- Reflective roof coating.
- Pressure diagnostics and repair following the pressure diagnostic procedure established by the WAP program.
- Jalousie windows retrofit (installed cost of under $15 per square foot).
- Water heater wrap (where allowed).

### Mobile Homes with Refrigeration Cooling and Electric Resistance Heating

- Reflective roof coating.
- Pressure diagnostics and repair following the pressure diagnostic procedure established by the WAP program.
- Jalousie windows retrofit (installed cost of under $20 per square foot).
- Water heater wrap (where allowed).

### Mobile Homes with Evaporative Cooling and Electric Resistance Heating

- Pressure diagnostics and repair following the pressure diagnostic procedure established by the WAP program.
- Jalousie windows retrofit (installed cost of under $20 per square foot).
- Upgrade of evaporative cooler motor with higher efficiency two-speed motor.
- Water heater wrap (where allowed).

### Mobile Homes with Evaporative Cooling Only and Fossil Fuel Heating

- Pressure diagnostics and repair following the pressure diagnostic procedure established by the WAP program.
- Jalousie windows retrofit (installed cost of under $14 per square foot).
- Upgrade of evaporative cooler motor with higher efficiency two-speed motor.
- Water heater wrap (where allowed).

In cases where there are potential cost effective energy upgrades not listed, incidental repairs of more than $100, or sufficient funds are not available to complete **all** (energy, health and safety and energy related repairs) possible upgrades, a computerized audit must be completed to develop a ranking of the energy upgrades, based on their SIR. Only those measures with a SIR of one or greater can be completed. If sufficient funds are not available to complete all possible upgrades, those upgrades with the highest SIR must **be** completed first.

## COST EFFECTIVENESS PRIORITY LIST FOR MOBILE HOMES

## CLIMATE ZONE 4

The priority list can be use to determine cost effective weatherization materials/measures for mobile homes located in Climate Zone 4 (see Climate Zone map).

A computer audit is required if:

- There are potential cost-effective energy upgrades to the house that are not listed on the priority list or the General Waste Heat Items list.
- There are not sufficient funds to complete all the measures; including energy related health and safety measures and other energy related repairs.
- Energy related incidental repairs of more than $100 are included with the energy upgrades.

### Mobile Homes with Refrigeration Cooling and Heat Pump or Fossil Fuel Heating

- Reflective roof coating.
- Pressure diagnostics and repair following the pressure diagnostic procedure established by the WAP program.
- Air Conditioners twenty years old or older upgraded with a minimum 13 SEER unit.
- Jalousie windows retrofit (installed cost of under $9 per square foot).
- Shade screens on all sun struck south, east and west windows and glass doors.
- Water heater wrap (where allowed).

### Mobile Homes with Refrigeration Cooling and Electric Resistance Heating

- Reflective roof coating.
- Pressure diagnostics and repair following the pressure diagnostic procedure established by the WAP program.
- Air Conditioners twenty years old or older upgraded with a minimum 13 SEER Heat Pump.
- Jalousie windows retrofit (installed cost of under $12 per square foot).
- Shade screens on all sun struck south, east and west windows and glass doors.
- Water heater wrap (where allowed).

### Mobile Homes with Evaporative Cooling and Electric Resistance Heating

- Pressure diagnostics and repair following the pressure diagnostic procedure established by the WAP program.
- Jalousie windows retrofit (installed cost of under $8 per square foot).
- Upgrade of evaporative cooler motor with higher efficiency two-speed motor.
- Water heater wrap (where allowed).

### Housing Type Three: Mobile Homes with Evaporative Cooling and Fossil Fuel Heating

- Pressure diagnostics and repair following the pressure diagnostic procedure established by the WAP program.
- Jalousie windows retrofit (installed cost of under $6 per square foot).
- Upgrade of evaporative cooler motor with higher efficiency two-speed motor.
- Water heater wrap (where allowed).

In cases where there are potential cost effective energy upgrades not listed, incidental repairs of more than $100, or sufficient funds are not available to complete **all** (energy, health and safety and energy related repairs) possible upgrades, a computerized audit must be completed to develop a ranking of the energy upgrades, based on their SIR. Only those measures with a SIR of one or greater can be completed. If sufficient funds are not available to complete all possible upgrades, those upgrades with the highest SIR must be completed first.

## COST EFFECTIVENESS PRIORITY LIST FOR MOBILE HOMES

## CLIMATE ZONE 5

The priority list can be use to determine cost effective weatherization materials/measures for mobile homes located in Climate Zone 5 (see Climate Zone map).

A computer audit is required if:

- There are potential cost-effective energy upgrades to the house that are not listed on the priority list or the General Waste Heat Items list.
- There are not sufficient funds to complete all the measures; including energy related health and safety measures and other energy related repairs.
- Energy related incidental repairs of more than $100 are included with the energy upgrades.

### Mobile Homes with Refrigeration Cooling and Fossil Fuel

- Reflective roof coating.
- Pressure diagnostics and repair following the pressure diagnostic procedure established by the WAP program.
- Jalousie windows retrofit (installed cost of under $16 per square foot).
- Water heater wrap (where allowed).

### Mobile Homes with Refrigeration Cooling and Electric Resistance Heating

- Reflective roof coating.
- Pressure diagnostics and repair following the pressure diagnostic procedure established by the WAP program.
- Jalousie windows retrofit (installed cost of under $24 per square foot).
- Water heater wrap (where allowed).

### Mobile Homes with Evaporative Cooling and Electric Resistance Heating

- Pressure diagnostics and repair following the pressure diagnostic procedure established by the WAP program.
- Jalousie windows retrofit (installed cost of under $24 per square foot).
- Upgrade of evaporative cooler motor with higher efficiency two-speed motor.
- Water heater wrap (where allowed).

### Mobile Homes with Evaporative Cooling and Fossil Fuel

- Pressure diagnostics and repair following the pressure diagnostic procedure established by the WAP program.
- Jalousie windows retrofit (installed cost of under $15 per square foot).
- Upgrade of evaporative cooler motor with higher efficiency two-speed motor.
- Water heater wrap (where allowed).

In cases where there are potential cost effective energy upgrades not listed, incidental repairs of more than $100, or sufficient funds are not available to complete **all** (energy, health and safety and energy related repairs) possible upgrades, a computerized audit must be completed to develop a ranking of the energy upgrades, based on their SIR. Only those measures with a SIR of one or greater can be completed. If sufficient funds are not available to complete all possible upgrades, those upgrades with the highest SIR must be completed first.

## COST EFFECTIVENESS PRIORITY LIST FOR MOBILE HOMES

## CLIMATE ZONE 6

The priority list can be use to determine cost effective weatherization materials/measures for mobile homes located in Climate Zone 6 (see Climate Zone map).

A computer audit is required if:

- There are potential cost-effective energy upgrades to the house that are not listed on the priority list or the General Waste Heat Items list.
- There are not sufficient funds to complete all the measures; including energy related health and safety measures and other energy related repairs.
- Energy related incidental repairs of more than $100 are included with the energy upgrades.

### Mobile Homes with Refrigeration Cooling and Heat Pump or Fossil Fuel Heating

- Reflective roof coating.
- Pressure diagnostics and repair following the pressure diagnostic procedure established by the WAP program.
- Air Conditioners twenty years old or older upgraded with a minimum 13 SEER unit.
- Shade screens on all sun struck south, east and west windows and glass doors.
- Jalousie windows retrofit (installed cost of under $8 per square foot).
- Water heater wrap (where allowed).

### Mobile Homes with Refrigeration Cooling and Electric Resistance Heating

- Reflective roof coating.
- Pressure diagnostics and repair following the pressure diagnostic procedure established by the WAP program.
- Air Conditioners twenty years old or older upgraded with a minimum 13 SEER heat pump.
- Shade screens on all sun struck south, east and west windows and glass doors.
- Jalousie windows retrofit (installed cost of under $10 per square foot).
- Water heater wrap (where allowed).

### Mobile Homes with Evaporative Cooling and Heat Pump or Fossil Fuel Heating

- Pressure diagnostics and repair following the pressure diagnostic procedure established by the WAP program.
- Jalousie windows retrofit (installed cost of under $4 per square foot).
- Upgrade of evaporative cooler motor with higher efficiency two-speed motor.
- Water heater wrap (where allowed).

### Mobile Homes with Evaporative Cooling and Electric Resistance Heating

- Pressure diagnostics and repair following the pressure diagnostic procedure established by the WAP program.
- Jalousie windows retrofit (installed cost of under $6 per square foot).
- Upgrade of evaporative cooler motor with higher efficiency two-speed motor.
- Water heater wrap (where allowed).

In cases where there are potential cost effective energy upgrades not listed, incidental repairs of more than $100, or sufficient funds are not available to complete **all** (energy, health and safety and energy related repairs) possible upgrades, a computerized audit must be completed to develop a ranking of the energy upgrades, based on their SIR. Only those measures with a SIR of one or greater can be completed. If sufficient funds are not available to complete all possible upgrades, those upgrades with the highest SIR must be completed first.

## GENERAL WASTE HEAT ITEMS

## ALLOWABLE MEASURES WHICH DO NOT REQUIRE A COST EFFECTIVENESS TEST

### Domestic Hot Water

- Adjustment of the hot water temperature to 120 degrees if approved by the client.
- Replacement of existing showerhead, which exceeds a flow rate of 2.5 GPM, with a low-flow replacement showerhead if approved by the client.
- Faucet aerators

### Space Heating and Cooling Systems

- Equipment maintenance and tune-up.
- Heating or Cooling System setback thermostat(s) for people with mobility problems or other extenuating circumstances, which make it difficult for them to manually adjust thermostat set points.

### Existing Evaporative Coolers

- General evaporative cooler tune-ups.
- Replacement of a single speed evaporative cooler motor with a listed two-speed motor.

### Base Load Items

- Replacement of incandescent light bulbs, which are on for at least one hour per day, with an ENERGY STAR qualified compact fluorescent bulbs that emit the same amount of light.
- Replacement of Refrigerators following the procedure established by the WAP program.

### Door Replacement

- Door replacement can be completed on a limited basis.

## DURABILITY MEASURES

Measure installed to protect or insure the long-term effectiveness energy measures are allowed. Total expenditures are subject to budget limitations.

## PRESSURE DIAGNOSTIC PROCEDURE

The pressure diagnostic procedures are to be followed when performing air leakage diagnostics and repair. These procedures provide crews with immediate feedback on the effectiveness of air sealing work, insure that repairs will provide long-term energy benefit in a safe manner, and provide essential management information needed to monitor the cost effectiveness of the air sealing programs.
Pressure Diagnostic Decision Tree

The pressure diagnostic decision tree provides assistance to agency personnel in identifying the minimum level of pressure testing that needs to be performed to meet the Weatherization Program requirements. The decision tree is comprised of two levels of housing characteristics and corresponding test requirements. In all cases, air sealing can only be performed in conjunction with pressure diagnostics.

### Level One: Homes with Central Forced Air Heating or Cooling

- The **complete** pressure diagnostic process must be followed in all cases on homes with a central forced air heating or cooling system. (Evaporative cooling is not considered a forced air system in this case.)

### Level Two: Homes with No Central Forced Air Heating or Cooling

- The use of pressure diagnostic process is **optional** in homes that do not have a central forced air heating or cooling system and that do not contain the characteristics listed below.

- **Possible cost effective envelope sealing:** Pressure diagnostics must be completed on homes where the cost of space heating and/or cooling provides possible cost effective envelope sealing opportunities.

- **Combustion appliance zone testing:** The Worst Case Pressure Test must be performed in all zones that contain a combustion appliance.

**Testing Procedure**

When performing pressure diagnostic, crews are required to use the following procedures **IN SEQUENCE**. If a test is not performed, documentation must be provided in all cases stating the rational for not following the testing procedure.

1. Initial air leakage and room pressure tests
2. Duct repair
3. Envelope air sealing
4. Room pressure balancing

**1. Initial Air Leakage and Room Pressure Tests:**

These initial tests will provide reference information on the existing condition of the home. This information will be used to determine what retrofit measures are to be completed and their effectiveness.

A. Perform a complete energy audit and combustion safety test of the house. **No pressure testing or air sealing can be done until the required combustion safety procedure is completed.**
B. Perform Room Pressure Tests (dominant duct leakage test, room pressure test, and combustion appliance zone [CAZ] test) and record pressures. List combustion appliances located in rooms tested. **If a pressure of –3 Pascal's (Pa) or more exists in a CAZ, or the possibility exists that repair work will create a pressure of –3 Pa or more in a CAZ, corrective action must be completed before or in conjunction with air sealing or duct repair.** Discuss possible corrective action with the client. **If client refuses to allow corrective action to be completed,** no air sealing or duct repair can be completed.
C. Perform zonal pressures and record the results.
D. Perform initial Whole House CFM50 Test and record the results.
E. Perform Pressure Pan Test and record initial pressure difference.
F. Based on the results of the energy audit, combustion safety tests, and pressure tests, determine the extent of work to be completed.

**2. Duct Repair Procedure:**

A. Duct repair can only be performed under the supervision of a trained technician.
B. **In all cases, air sealing can only be performed in conjunction with pressure diagnostics.**
C. The Health and Safety Policy must be followed at all times.
D. Perform duct repair using approved products (see Product Guidelines) and repair techniques (see Duct Repair Techniques).
D. After initial duct repair is performed, evaluate if additional duct repair is possible.
E. Once all attainable duct leakage is repaired, perform post duct repair Whole House CFM50 Test and pressure pan readings. The difference between the initial Whole House CFM50 Test and the post duct repair Whole House CFM50 Test will provide the CFM reduction in duct leakage.

**3. Envelope Air Sealing Procedure:**

A. All duct repairs must be completed before envelope air sealing.
B. Envelope air sealing can only be performed under the supervision of a trained technician.
C. **In all cases, air sealing can only be performed in conjunction with pressure diagnostics.**
D. The Health and Safety Policy must be followed at all times.
E. Perform air sealing with high-quality products. Weatherization products must be permanent and guaranteed for at least 15 years.
F. Repeat Whole House CFM50 Test after air sealing work is performed and evaluate if additional air sealing is possible (see Health and Safety Policy for CFM ventilation requirements).
G .Once air sealing is completed, perform final Whole House CFM50 Test and record results.

**4. Room Pressure Balancing:**

A. All duct repair and air sealing must be completed before room pressure balancing.
B. Room pressure balancing can only be performed under the supervision of a trained technician.
C. **In all cases, room pressure balancing can only be performed in conjunction with pressure diagnostics.**
D. The Health and Safety Policy must be followed at all times.
E. Perform post air sealing room pressure tests (dominant duct leakage test, room pressure test, and worst case test) and record room pressures.
F. Review options to remedy pressure imbalances with the client. If pressure balancing is not performed, record reasons in the work summary.
G. Repeat room pressure tests after initial pressure balancing measures are installed and evaluate if addition pressure balancing is needed.
H. Once pressure balancing is completed, repeat room pressure tests and record results.

**Economics**
The cost effectiveness of pressure diagnostic and repair is to be based on a comparison of the present value of the reduced air leakage and the cost (labor and materials) to achieve the reduction. The values in the following tables are designed to provide general guidance on the present value of air leakage control.

**Infiltration**
The following table gives the present value of reducing the infiltration rate by 100 CFM50 for a typical weatherized home.

| Present value of 100 CFM50 reduction | Climate Zone 1 | Climate Zone 2 | Climate Zone 3 | Climate Zone 4 | Climate Zone 5 | Climate Zone 6 |
|---|---|---|---|---|---|---|
| | $160 | $40 | $90 | $40 | $90 | $40 |

**Duct Leakage**
The following table gives the present value of reducing duct leakage by 100 CFM50 for a typical weatherized home.

| Present Value of 100 CFM reduction | Climate Zone 1 | Climate Zone 2 | Climate Zone 3 | Climate Zone 4 | Climate Zone 5 | Climate Zone 6 |
|---|---|---|---|---|---|---|
| Heating | $600 | $90 | $345 | $95 | $385 | $50 |
| Cooling* | $10 | $450 | $80 | $300 | $100 | $570 |

*If a home has only evaporative cooling, only the heating values will be realized in duct repair.

**COMBUSTION SAFETY AND CARBON MONOXIDE PROCEDURES**
The Combustion Safety procedure records data on combustion appliances in the house, possible health and safety issues with these appliances and the actions taken by the Weatherization program. Because combustion appliances can be the dominant factor in the health and safety of the occupants, it is imperative that the combustion safety procedures are followed in all cases.

**Note: Gas/propane stoves cannot be replaced utilizing DOE funds.**

**Carbon Monoxide Tests**
Ambient CO levels shall be monitored upon entering the combustion appliance zone and during the test period for all appliances. If ambient levels exceed 35 ppm at any time, turn off the appliance immediately and make appropriate repair recommendations according to the charts provided.

CO shall be measured of undiluted flue gases, in the throat or flue of the appliance using a digital gauge and measured in parts per million (ppm). Do not drill holes in flues for power vented or sealed combustion units. Instead, measure CO at the exterior outlet of the flue and proceed with appropriate actions according to the CO limits identified in the Combustion Safety Action Level table. For all combustion appliances, CO shall be measured at steady-state operating conditions. Measurements shall be taken of undiluted flue gases.

With the exception of unvented gas or propane cooking appliances, CO must be tested in all combustion appliances under worst-case conditions and normal draft conditions (when the appliance fails under worst-case). In addition, it is recommended that CO be tested under a mild down-draft if conditions are safe.
For gas ovens, CO shall be measured at steady state (usually after 5-10 minutes of operation) at the highest setting. When measuring CO on gas ovens, it is recommended to turn on the exhaust hood and open a window to reduce risk of exposure to elevated ambient CO levels.

**Spillage and Draft Tests**
Spillage and draft tests must be completed for all natural and induced draft space heating systems and water heaters. Spillage and draft must first be tested under worst-case conditions (see procedure below) and then repeated for natural conditions if the appliance fails under worst-case.

When a chimney is shared by multiple appliances the appliance with the smallest Btu input rating shall be tested first and remaining appliances tested in order of increasing input rate.

Induced draft heating systems shall be checked for spillage at the base of the chimney liner or flue. If a chimney is shared between an induced draft heating system and a natural draft water heater, spillage shall be checked at the water heater draft diverter. Vent draft pressure shall be measured at steady-state operating conditions for all natural draft heating and hot water appliances. Draft test location should be approximately 1-2' downstream of the appliance draft diverter. The test hole must be sealed with an appropriate plug after the test. Acceptable draft test results are shown below:

**Acceptable Draft Test Ranges**

| Outside Temperature (degree F) | Minimum Draft Pressure Standard (Pa) |
|---|---|
| <10 | -2.5 |
| 10-90 (T. out ÷ 40) | – 2.75 |
| >90 | -0.5 |

Most appliances will spill upon startup with a cold chimney. Document the amount of time it takes for spillage to stop and a positive draft to be established. Any appliance that continues to spill flue gases beyond the time limits established in the statement below has failed the spillage test.

**Acceptable Appliance Spillage Periods**
Vented appliances, regardless of type, that spill flue gases for more than 60 seconds after startup, fail the spillage test.

**Gas Supply Safety**
The entire gas/propane line must be examined and all leaks repaired. Particular care should be made in the immediate vicinity of the appliances and at the joints, shutoff valves, and pilot lines. Identify leaks using a gas leak detector and accurately locate the source of the leak using a soap bubble solution. Flexible gas lines must be replaced if they are: kinked, corroded or show signs of visible wear, the line was manufactured before 1973 (date is stamped on the date ring attached to the line), or the line has any soldered connections.

**Combustion Air**
Combustion air requirements, as prescribed in NFPA 54 or local gas codes, must be met on all homes with combustion appliances.

The Kbtu per hr input for heating and water heating equipment must be listed. If Kbtu per hr information is not available, state this fact and estimate input.
The location of all heating and water heating equipment must be listed.

The source and amount of combustion air for all heating and water heating equipment must be listed. For appliances that are using an interior space for combustion air, the cubic feet available is determined by the volume (area times height) of the space. Areas that can be isolated and the flow of air restricted from the combustion appliance are not to be included.

**Heat Exchanger Safety Checks**
Tests for possible cracked heat exchanger must be performed on all systems possible.

**HVAC EQUIPMENT AND DISTRIBUTION INSTALLATION/REPAIR POLICY**
The following policy must be strictly adhered to when installing or repairing HVAC equipment and distribution systems.

**Repair/Replacement**
Replacement of inoperable equipment is allowed under the following conditions.

- Existing inoperable AC equipment upgraded with a minimum 13 SEER unit if the replacement costs are less than the estimated repair cost and the lost saving potential of the new equipment.

- Existing inoperable forced air furnace equipment upgraded with a 90+ AFUE unit if the replacement costs are less than the estimated repair cost and the lost saving potential of the new equipment.

Replacement of the equipment is also justified if there is a high probability that the repaired equipment will fail again in the near term.

**Sizing and Installing HVAC Equipment**

- Minimum HVAC efficiencies:
  - AC: 13 SEER
  - Heat Pump: 13 SEER and 7.7 HSPF
  - Combustion furnace: 80% AFUE.
- New mechanical systems shall be sized according to the ACCA Manual J. Room-by-room load calculations using the ACCA Manual J shall be submitted for each plan to verify sizing.
- Airflow across the indoor coil and/or heat exchanger shall conform to the manufacturer's specifications.
  - Refrigerant charge shall be installed per the manufacturer's specifications.
  - Indoor and outdoor units shall be "matched" according to the ARI Directory.

**Evaporative Cooler Installation**
It is strictly prohibited to install an evaporative cooler on the ductwork of a forced air heating or cooling system that did not previously include an evaporative cooler. Replacing an existing evaporative cooler with a new evaporative cooler on a forced air heating or cooling system is allowed.

All existing evaporative coolers must be equipped with a damper system that allows the cooler to be isolated from forced air ductwork or the conditioned space.

**Installation of Forced Air Distribution Systems**

- All new ductwork must be installed according to the Duct Installation/Repair Techniques and Product Guidelines.
- All duct systems must be pressure tested and the CFM leakage rate cannot exceed 3% of conditioned sqft or 5% of high speed fan flow of the systems air handler capacity.
- Airflow to each room shall match designed airflow calculations from the ACCA Manual J to within +/- 10%.

**Repair of Existing Air Distribution Systems**
All ductwork must be repaired according to the Duct Installation/Repair Techniques and Product Guidelines.

**Duct Installation / Repair Techniques**
A. Flex ducts

- Seal the start collar to the plenum using mastic reinforced with mesh around the entire circumference.
- At all connections (triangles, junction boxes, etc.), fasten the inner liner to the start collar using a mechanically tightened draw band for mechanical strength.
- Seal the inner liner using approved mastic reinforced with fiberglass mesh and overlaid with another layer of mastic sufficient to cover the entire pattern in the mesh.

- Fasten the outer liner well over the start collar using a mechanically tightened draw band.
- Seal all boots to the Sheetrock using mastic or silicone caulk applied at the point where the air barrier (metal or exterior foil backing) meets the Sheetrock.

B. Duct board

- Staple all duct board joints with appropriate staples every two inches.
- Apply a layer of mastic; embed reinforcing mesh and overcoat with another layer of mastic sufficiently thick to hide the pattern in the tape.
- Allow for proper curing (manufacturer's specifications) before starting the system. This is critical.
- Seal all boots to the Sheetrock at the point where the foil backing meets the Sheetrock.

C. Metal

- Seal all points where components join together using mastic. Special attention must be given to any area where tabs provide the method of securing the joint.
- Seal all boots to the Sheetrock at the point where the metal meets the Sheetrock.
- Join all components with screws or other mechanical fastening devices as required in listings or code.

D. Building Cavities Used as Returns

- If the cavity is lined with Sheetrock, seal all joints with mastic. All gaps over 1/4 inch must be reinforced with embedded mesh tape.

- If the cavity is lined with duct board with the fiberglass side facing inside, you must create a positive air barrier in the plenum by covering the fiberglass with a material such as Sheetrock, duct board with the foil facing inside, or coat the fiberglass with mastic, etc., and seal all remaining joints in the plenum.

- If the cavity is unlined (exposed studs) and it is impossible to line the plenum, seal all joints, holes and penetrations using mastic applied with a brush attached to a handle or other extension. It may be easier and more effective to simply create a ducted plenum or chase and avoid the problems associated with using a building cavity to convey conditioned air.

- It may be necessary to cut a hole in the plenum in order to gain access and seal the interior adequately.

E. Air Handler

- Seal all penetrations and gaps between materials using mastic or silicone. If the gap is over ¼ inch, reinforce with fiberglass mesh.
- Seal the areas where the air handler meets the supply/return plenums using mastic reinforced with fiberglass mesh or other approved methods.
- Seal any panels that will require frequent access by the client (such as the filter area), using a quality temporary tape (duct tape).
- The air handler must not have any noticeable leaks.

F. Wall Penetrations

(The most common wall penetration problem is where the opening for the return grille is cut through the wall. In such an installation, even in a lined plenum, the wall cavity is open into the plenum.)

- Where an un-ducted section of the air distribution system penetrates a wall cavity, the wall cavity must be sealed.
- The cavity will first be blocked using a rigid air barrier such as Sheetrock or duct board with the foil facing the airflow.
- All seams, cracks, crevices, and openings will then be sealed airtight using approved mastic.

**Duct Product Guidelines**

- All new ductwork will be a minimum of R-8.
- Duct sealing materials shall have both excellent cohesive and adhesive qualities.

- Water-based Latex mastic with at least 50 percent solids reinforced with fiberglass mesh at all duct connections, joints and seams shall be used. "Hardcast" type mastic with reinforcing mesh is also acceptable.
- The ducts shall be further attached as per manufacturer's specification, using a draw tie, plumbing strap or screws, as appropriate for a strong mechanical connection. The mechanical connection **does not** replace air sealing.
- Foil tapes, including UL 181 AP-type tapes, when used alone will not be accepted. If tape is used to temporarily hold a seam, it must be overlaid with a coating of mastic that extends at least one inch (1") past the tape on all sides, and is thick enough to hide the tape completely.
- Do not use materials that are potentially damaging or have harmful effects, such as toxic vapors or carcinogenic substances that may be harmful to the clients or the installer. Agencies are required to obtain and maintain the Material Safety Data Sheets (MSDS) for all materials used on the job. Federal law requires this procedure; further information is available locally from the vendor.
- Materials must meet all current codes and manufacturer's specifications.

## INSULATION STANDARDS

### Installation of Insulation

Insulation must be installed with no gaps, no voids, no compression of the insulation, or no wind intrusion into the insulation. Insulation must also be in alignment with the air barrier in all cases.

All items on the Thermal Bypass Inspection Checklist must be verified where accessible. Items not meeting these standards must be repaired unless the repair is not cost effective. The Checklist includes the following 12 areas:

- Shower/Tub at Exterior Wall: Exterior walls behind tub or shower have been fully insulated. Exterior walls behind tub or shower have been faced with air barrier material.
- Insulated Floor above Garage: Floor framing is completely filled with insulation or insulation is snug against sub-floor. Air barrier is installed at any exposed edges of insulation.
- Attic Knee Walls Air barrier is installed on attic side of insulated wall. Insulation is in complete alignment with interior wall finish.
- Attic Hatch/Drop-down Stair Attic: Opening is fully gasketed for an air-tight fit. Hatch is covered with insulation that is attached and fits snugly in framed opening.
- Cantilevered Floor: Floor framing is completely filled with insulation or insulation is snug against sub-floor. Air barrier installed at any exposed edges of insulation.
- Duct Shafts: Opening is enclosed as required with flashing and any remaining gaps are sealed with caulk or foam.
- Flue Shaft: Opening is fully enclosed as required with flashing. Combustion clearance between flue and combustible flashing (e.g., OSB panel) are properly closed with metal collars and any remaining gaps are sealed with fire-proof caulk or foam.
- Piping Shaft/ Penetrations: Opening is fully enclosed as required with flashing and any remaining gaps are sealed with caulk or foam.
- Dropped Ceiling/Soffit Air barrier is fully aligned with insulated framing and any gaps are fully sealed with caulk or foam.
- Fireplace Wall: Air barrier is fully aligned with insulated framing in framed shaft behind fireplace and any gaps are fully sealed with caulk or foam.
- Staircase Framing at Exterior Wall/Attic: Air barrier is fully aligned with insulated framing and any gaps are fully sealed with caulk or foam.
- Whole-house Fan Attic Penetration: An insulated cover is provided that is gasketed to the framed opening.

## RENEWABLES

Section 206 of the Energy Policy Act of 2005 (EPACT 2005) amended the Energy Conservation and Production Act to clarify that assistance under the Weatherization Assistance Program may be provided for renewable energy systems and to provide definitions and criteria to be used in assessing eligibility.

**Cost Effectiveness**
Renewable energy systems must follow the Cost Effectiveness Procedures. Local agencies must determine that the renewable energy system is cost effective by ensuring the discounted savings-to-investment ratio (SIR) is greater or equal to one. The net cost of renewable energy systems after rebates from third parties can be used for the SIR review.

**Product Guidelines**

Renewable energy systems must meet the requirements established by the State of Arizona for state tax credits which imposed several requirements on the seller of solar devices in order to qualify the equipment and application. Title 44, chapter 11, article 11 of the Arizona revised statues (44-1761- Definitions, and 44-1762 - Solar energy device warranties; installation standards; inspections) provides details on the requirements.

**FINAL INSPECTION REQUIREMENTS**
A final inspection shall be performed on all jobs.

The final inspection must be completed by designated inspector not directly involved with the completion of the job.

The final inspection shall verify that the house characteristics reported are correct.

The inspection shall verify that all cost effective opportunities were completed.

The inspection shall include all measures listed on the Work Performed report to verify installation has been completed in a safe and effective manner.

The inspection shall include a review of the diagnostic result, both pressure and combustion safety, to verify that all applicable tests were completed.

The inspector shall complete diagnostics on minimum of ten percent of completed homes to compare with reported results.

## HEALTH AND SAFETY PLAN

**PURPOSE**
To establish the policies and procedures under which health and safety concerns are addressed in the Weatherization Assistance Program (WAP).

**GOAL**
To ensure energy savings are the result of Weatherization Assistance Program actions while promoting a healthy and safe environment for clients and WAP workers and contractors.

**SCOPE**
Energy-related health and safety concerns need to be remedied before, or because of, the installation of weatherization materials. Therefore, energy-related health and safety hazards associated with weatherization activities may be remedied or prevented with DOE funds. Measures and their costs must be reasonable and must not seriously impair the primary energy conservation purpose of the program.

The Health and Safety Procedures are applicable to all activities under the WAP.

Total expenditures on Health and Safety are subject to budget limitations.

**A. Grantee Health & Safety**
OEP – WAP field monitors will follow all applicable health and safety rules with respect to the conduct of their on-site job visits including the use of face masks, hard hats, appropriate footwear, and such other applicable attire and equipment so as to minimize personal risks.

## B. Crew and/or Contractor Health & Safety

Arizona sub-grantees and their contractors will comply with Occupational Safety and Health Administration (OSHA) requirements in all weatherization activities.

The costs for sub-grantees to comply with OSHA requirements (action items and measures that DOE funds and receives credit for) may be charged under health and safety, tools and equipment, incidental repairs, etc. The cost category selected will be charged consistently throughout the state (from agency to agency) for the same activity.

Because of the wide range of activities involved in weatherizing a house, ensuring crew health and safety requires a broad knowledge of the appropriate OSHA requirements. Some of these requirements include, but are not limited to: respirator protection, techniques for safely lifting heavy objects, electrical equipment safety, ladder safety, and general worker protection. OSHA standards should be consulted for further details.

Other useful information includes Material Safety Data Sheets (MSDS) that identify potential health risks and describe the proper use, handling, and storage of a wide variety of materials, including some common weatherization materials. MSDS also recommend personal protective equipment and address first aid measures.

## C. Client Health and Safety

Weatherization services can be provided in a manner that minimizes risk to workers and clients. Although the Weatherization Assistance Program does not provide all the solutions, awareness of potential hazards is essential to providing quality services. A list of the more common hazards and DOE's preferred approach to them are discussed in Section D. Other energy-related hazards should be considered on a case-by-case basis

Grantees and sub-grantees are required to take all reasonable precautions against performing work on homes that will subject workers or clients to health and safety risks. If there is any doubt that weatherization work can be conducted in a manner that is safe for all parties concerned, the subgrantee must not proceed further.

Before beginning work on the residence, sub-grantees will take into consideration the health concerns of each occupant, the condition of the dwelling, and the possible effect of work to be performed on any particular health or medical condition of the occupants. When a person's health is fragile and/or the work activities would constitute a health or safety hazard, the occupants at risk will be required to leave the home during these work activities or the work will be suspended until such a time as it can be performed appropriately.

## D. Potential Hazard Considerations

### 1. Biological

Removal of mold, odors, viruses, bacteria, unsanitary (including raw sewage) conditions, and rotting wood is not a Weatherization responsibility; however, subgrantee frequently encounter these conditions. DOE funds may be used if these conditions must be remedied to allow effective weatherization work and/or to assure the immediate or future health of workers and clients. OEP – WAP requires that its sub-grantees seek prior approval to proceed before attempting to weatherize such dwellings with *Biological* problems.

Arizona sub-grantees will exercise caution when selecting air tightness limits for dwellings with these problems. Since these conditions are often related to moisture, Arizona sub-grantees may use DOE health and safety funding to acquire moisture detection instruments. Sub-grantees should incorporate moisture detection into their initial energy audits. If necessary, weatherization services may need to be delayed until moisture problems can be corrected by other funding sources.

### 2. Combustion Appliances and Combustion Gases

The following policy must be strictly adhered to when completing Weatherization work. If any house fails these program safety standards and the problem cannot be remedied, the homeowner must be notified in writing and a copy placed in the client's file.

- Perform air sealing and duct repair **only** in conjunction with pressure diagnostics to ensure that sufficient ventilation and draft rates are maintained in the home.

- A UL listed carbon monoxide detector (Underwriters Laboratories 2034-98) shall be installed in all structures with an attached garage or a combustion appliance located in the conditioned space.

- Research and follow the local health and safety codes and standards dealing with residential ventilation requirements for occupants and combustion equipment.

- No air sealing (including duct repair) should be done if there is a high pollution source, such as a non-vent combustion heater, that can't be removed.

- No air sealing (including duct repair) should be done if there are existing health and safety problems in the home.

- No air sealing (including duct repair) should be done if there is Carbon Monoxide (CO) present in the flue gases higher than 100 PPM.

- No air sealing (including duct repair) should be done if there is a possible gas leak.

- No air sealing (including duct repair) should be done if CO is greater than 9 PPM in the living space.

- If CFM50 is less than 1500 CFM for the home or 300 CFM per person (whichever is greater), the homeowner must be advised of the tightness of the home. Any further air sealing (including duct repair) may require that an active ventilation strategy be employed.

- Under normal operating conditions, an air handler cannot create room pressures with a magnitude of - 3.0 Pascal's, or greater with reference to outside, anywhere in a combustion appliance zone.

- Corrective action must be completed before or in conjunction with air sealing (including duct repair) if a negative pressure of 3 Pascal's or greater exists or is produced by repair work in a combustion appliance zone.

- Flame change is an indication of a cracked heat exchanger - no air sealing (including duct repair) should be done until the problem is fixed.

- If spillage of flue gases occurs for more than one minute - no air sealing (including duct repair) should be done until the problem is fixed.

- If draft is low, it must be fixed before air sealing (including duct repair) is completed.

**IF THE CONDITIONS DESCRIBED BELOW CONCERNING COMBUSTION AIR ARE NOT MET, <u>NO AIR SEALING</u> (INCLUDING DUCT REPAIR) SHOULD BE DONE:**

- In homes of ordinary tightness insofar as infiltration is concerned, all or a portion of the air for fuel-burning appliances may be obtained from infiltration when the requirements for 50 cubic feet per 1000 Btu/hr input is met. Two openings are required and one shall be within 12 inches of the bottom of the space containing the combustion equipment. Openings shall allow space to communicate with the rest of the house. A minimum free area of one square inch per 1000 Btu per hour (or 100 square inches, which ever is greater) of the total input rating of all gas utilization equipment in the space, shall be provided.

- In all cases where combustion air is from inside the home, the homeowner must be made aware of this and sign the Health and Safety Waiver before any air sealing or duct repair is completed.

(**Note:** If this method is used, special attention must be given to zonal and draft pressures. In buildings of unusually tight construction, combustion air shall be obtained from outside.)

- In homes that receive combustion air from outside the conditioned space, two openings are required. One shall be within 12 inches of the top and one within 12 inches of the bottom of the space containing the combustion equipment. The openings shall communicate directly, or by ducts, with the outdoors or spaces (crawl or attic) that communicate with the outdoors.

- The following guidelines must be met when determining the minimum free area for combustion air openings:

- Openings directly communicating with the outdoors shall provide one square inch per 4000 Btu per hour of the total input of all gas utilization equipment in the space.

- Openings communicating to outdoors with vertical ducts shall provide one square inch per 4000 Btu per hour of the total input of all gas utilization equipment in the space.

- Opening communicating to outdoors with horizontal ducts shall provide one square inch per 2000 Btu per hour of the total input of all gas utilization equipment in the space.

(**NOTE:** If the free area is not known because of louvers or screens, double the required opening size. **IF THESE NFPA 54 NATIONAL FUEL GAS CODE REQUIREMENTS ON COMBUSTION AIR ARE NOT MET**, THEN NO AIR SEALING (INCLUDING DUCT REPAIR) SHOULD BE DONE UNTIL THESE CONDITIONS ARE MET.)

**3. Fire Hazards**
Combustion appliances and their associated venting systems can also present potential fire hazards. Sub-grantees that accept clients with wood stoves and fireplaces will have procedures to identify potentially dangerous creosote build-up in chimneys and wood stove flues.

It is the sub-grantee's responsibility to ensure that any work on wood stoves and fireplaces conforms with applicable codes in jurisdictions where the work is being performed.

**4. Existing Occupant Health Problems**
Sub-grantees will be sensitive to client health problems that might be exacerbated by weatherization activities.

Sub-grantees will establish procedures to identify pre-existing client conditions (e.g., allergies) and address such problems when they are found. Those procedures should address the manner in which such problems will be identified and the steps to be taken to ensure that weatherization work will not worsen these problems.

**5. Indoor Air Quality (IAQ)**

**a. Asbestos**
General asbestos removal is not approved as a DOE WAP health and safety weatherization cost.

Major asbestos problems should be referred to the Arizona Department of Environmental Quality or to the Environmental Protection Agency (EPA).

Where local agencies work on large heating and distribution systems, including related piping, asbestos removal may be necessary. Removal is allowed to the extent that energy savings resulting from the measure will provide a cost-effective savings-to-investment ratio. This would normally be true with work done on large, multifamily heating systems. Where permitted by code or EPA regulations, less costly measures that fall short of asbestos removal, such as encapsulation, may be used. Removal and replacement of asbestos siding for purposes of wall cavity insulation is permissible if allowed by state and local codes.

**b. Radon**
Where there is a previously identified radon problem, work that would exacerbate this problem should be limited. Radon abatement is not an allowable activity under the Weatherization program. However, those costs associated with taking precautions in a dwelling known to have radon problems are allowable weatherization expenditures. These costs are

allowable if an energy audit indicates that weatherization techniques would help in radon remediation. While sub-grantees should establish sound radon-related strategies, major radon problems should be referred to the appropriate local environmental organization or agency for mitigation or abatement.

**c. Formaldehyde and Volatile Organic Compounds (VOCs)**
Formaldehyde vapors may be slowly released by some new carpets, wafer-board, plywood, etc. Some household cleaning agents also emits VOCs. Caution should be taken when selecting air tightness limits in dwellings with VOC problems.

**6. Lead Paint**

Lead Safe Weatherization (LSW) must be applied to all pre-1978 housing unless the house meets EPA's Final Rule Exemptions.

Exemptions

1. **No Lead-Based Paint will be Disturbed.** LSW must be applied to all pre-1978 housing unless there is existing evidence that the home has been certified as being lead-free or below the lead threshold limit (e.g., for paint containing lead below the regulated level, 1.0 mg/cm2 or 0.5% by weight). One of the following methods must be used to determine the paint to be disturbed is not lead-based paint: -Written determination by certified lead inspector or risk assessor; *OR*
   -Proper use of EPA-recognized test kit provided agencies (*documenting manufacturer and model of test kit used, description and location of components tested, and test kit results)*
   *Note: Beginning in 2010, tests must be performed by a Certified Renovator, per EPA final rule. Test kits are currently being evaluated but none have been approved to date – updates and approved kits will be posted athttp://www.epa.gov/lead/pubs/renovation.htm*
   *OR*
   -A State-approved lead-based paint test protocol (e.g., XRF scans verifying absence of lead paint).

2. **Mobile Homes.** Often, interiors of mobile homes were not painted but rather, paneling was applied to the surfaces. Therefore, pre-1978 mobile homes that were not painted by the manufacturer, occupant, landlord, or past owner of the unit before 1978, may be exempt from LSW. However, Weatherization Programs must verify the areas receiving weatherization services have never been painted or were painted for the first time after 1978. If this is not verifiable, then LSW protocols must be followed. Painted exterior surfaces on pre-1978 units should not be drilled, scraped, sanded, or receive any other work that disturbs the paint.

3. **Exempt from training and work practice requirements <u>if owner signs written statement</u> that <u>all</u> apply:**
   a. No pregnant women resides there; and
   b. Not a child-occupied facility ("occupied" includes being the child's primary residence or a home that is visited regularly by the same child, under age 6, on at least two different days within any week (Sunday through Saturday period), provided that each day's visit lasts at least 3 hours and the combined weekly visits last at least 6 hours, and the combined annual visits last at least 60 hours).

4. **Housing for the elderly or persons with disabilities** (unless any one or more children under age 6 resides or is expected to reside in such housing for the elderly or persons with disabilities).

5. **Any 0-bedroom dwelling.**

6. **Minor Repair or Maintenance Activities**: Activities that will disturb less than the following square feet of paint surfaces in 30 calendar days (counting all paint surface areas of a removed component):
   - 6 square feet per room for interior activities; or
   - 20 square feet for exterior activities.

But this exemption does *NOT* apply to the following:

- Window replacement.
- Demolition of painted surface areas.
  - Using any of the following:
- Open-flame burning or torching;
- Machines to remove paint through high-speed operation without HEPA exhaust control; or
- Operating a heat gun at temperatures at or above 1100 degrees Fahrenheit.

**Testing for lead-based paint and lead-based paint residues**
Testing for lead-based paint is not an allowable weatherization expense except, when it is related to the installation of energy efficiency measures. These expenditures must be within the limits set by the state in its Weatherization health and safety plan.

**U.S. Department of Energy Minimum Standards for LSW**

Safe Work Practices must be implemented to minimize exposure to hazards for residents and the workers, while allowing Weatherization to occur in a cost-effective manner and to not hinder production. The effort required will be based on the hazard, the work specifications, and customer health issues.

**CHECK:** Federal, state, and local regulations.

- OSHA has rules for worker safety.
- States and local communities may have rules for waste disposal.

**To meet the LSW minimum standards, crews and contractors MUST follow the general principles of working in a lead-safe manner. Best practices for working in a lead-safe manner are available in the benchmark LSW procedures and curriculum and should be reviewed and consistently enforced on LSW jobs.**

**A. Requirements**

**Client Protection and Notification**
For occupied homes, the Weatherization staff, crew, or contractor must have an adult tenant or homeowner sign an acknowledgement after receiving the pamphlet. The pamphlet can also be sent by certified mail with receipt to be placed in the customer file.

In multi-unit housing, the agency must:

- Provide written notice to each affected unit (notice must describe: general nature and locations of the planned renovation activities; the expected starting and ending dates; statement of how occupant can get pamphlet at no charge); or
- Post informational signs (signs must describe general nature and locations of the renovation and the anticipated completion date) and post the EPA pamphlet. (If pamphlet is not posted then agencies are required to provide information on how interested occupants can review a copy of the pamphlet or obtain a copy at no cost from the Weatherization Program).
- Delivery to owner/occupant. Owner's and/or occupant's signature with acknowledgment or certificate of mailing. The owner/occupant must acknowledge receipt of the EPA pamphlet prior to start of renovation that contains the address of unit undergoing renovation, name and signature of owner or occupant, and the date of signature. It must be in same language as "contract for renovation" for an owner-occupied (or the same language as the lease for occupant of non-owner occupied) target housing.

If the Weatherization Program cannot get a signed acknowledgment (either the occupant is not home or refuses to sign the form), then the self-certification section of the form must be signed to prove delivery.

The acknowledgement form must be filed and remain with the client file for three years from date of signature. In addition to providing a copy of the pamphlet to owners and occupants, designated local agency staff (e.g., intake specialist, auditor, crew chief) must discuss the hazards associated with lead-based paint and lead dust, and describe how they will conduct LSW in the home.

**Weatherization Worker Protection**

LSW includes these procedures and safety precautions:

- Wear personal protective gear specifically suited for the particular LSW measure. Use the National Institute for Occupational Safety and Health (NIOSH) approved respirators (at least ½ face) with HEPA filters.
- Use disposable overalls (with hood or a disposable painter's cap), gloves (cloth, plastic, or rubber as appropriate), goggles, and disposable shoe/boot covers.
- Keep dust to a minimum and properly contain dust and paint chips to the work area.
- Clean up area during and after work.
- During Weatherization, wash your hands and face frequently, particularly when leaving the work area and especially before leaving the area for the purpose of eating, drinking, or smoking.
- Before leaving a confined work area, remove your protective clothing and protective shoe/boot covers to avoid exposing others.
- Before leaving a confined work area, and before returning tools and equipment to vehicles, clean all tools to avoid exposing others and creating a lead-hazard to the next Weatherization job.
- Get annual medical exams to check blood lead levels. Do non-lead-related work if your blood lead level gets too high.
- Inform your employer if you develop signs of lead poisoning.

**B. General LSW Work Practice Standards**

- Crews and contractors must take steps to protect occupants from lead-based paint hazards while the work is in-progress using appropriate containment strategies.
- Occupants, especially young children or pregnant women, may not enter the work site. Occupants are allowed to return only after the work is done and the home has passed a visual inspection.
- Occupants' belongings must be protected from lead contamination. This can be done by removing them from the work area or covering them in protective bags and sealing it to prevent dust from getting on the items.
- The work site must be set up to prevent the spread of leaded dust and debris.
- Warning signs must be posted at entrances to the worksite when occupants are present; at the main and secondary entrances to the building; and at exterior work sites. The signs must be readable from 20 feet from the edge of the worksite. Signs should be in the occupants' primary language, when practical.
- The work area must be contained. If containment can not be achieved with occupants in the unit (e.g., work will take several days and involves the kitchen, bathrooms, or bedrooms that can not be sealed off from use), occupants must move out of the unit or the work must be deferred until containment can be achieved.
- Ensure containment does not interfere with occupant and worker egress in an emergency.

**Prohibited Work Activities**

- NEVER - use reusable cloth or fabric, such as a painter's drop cloth, as protective containment sheeting. Polyethylene and in some cases when working on the exterior garden fabric are the only acceptable protective containment sheeting and must never be reused.
- NEVER - use brooms and shop vacuums for cleanup. Wet cleaning and HEPA vacuums are the only acceptable methods for cleanup.
- NEVER – use a conventional shop vacuum with HEPA filters – only HEPA-designed vacuums are acceptable for LSW.
- NEVER - turn leaded paint into leaded dust by dry scraping or sanding (unless needed around electrical outlets) or grinding, abrasive blasting or planning.
- NEVER - use an open-flame torch or heat gun (above 1100°F) to remove paint or window glazing. Open flame/high heat methods to remove paint create fumes that are dangerous for workers to breathe. Small lead particles created by burning and heating also settle on surrounding surfaces and are very hard to clean up.
- NEVER - allow residents and pets access to the work area while work is underway.
- NEVER - open windows and doors allowing lead dust to float into other parts of the building or outside.
- NEVER - allow furniture and other objects to remain in the Weatherization work area while Weatherization work is being performed unless they are covered and sealed in polyethylene sheeting or bags.

**C. Containment**

*Containment is anything that stops any dust or debris from spreading beyond the work area to non-work areas. The level of containment must be determined by the auditor/inspector or supervisor before work is assigned to a crew or contractor.* To comply with EPA's LRRPP Rule requirements, **a Certified Renovator will be required at the jobsite to assess and set up the containment site.**

Every home and every specific Weatherization measure is unique, therefore the level of containment required will be based on the hazards present, the age of the home, the scope of work activities, and any customer health issues. Although Weatherization jobs require individual assessments, LSW work generally falls into two levels of containment and the related standards are outlined below.

**Level 1 Containment**

Level 1 containment is required in pre-1978 homes when ***less than*** 6 $ft^2$ of interior painted surface per room or 20 $ft^2$ of exterior painted surface will be disturbed.

Level 1 containment consists of methods that prevent dust generation and contains all debris generated during the work process. The containment establishes the work area which must be kept secure.

Measures that *may* fall within this guideline include:

- Installing or replacing a thermostat
- Drilling and patching test holes
- Replacing HEPA filters and cleaning HEPA vacuums
- Changing Furnace Filter
- Removing caulk or window putty (interior)
- Removing caulk or window putty (exterior)
- Removing weather-stripping

**Level 2 Containment**

Level 2 containment is required when Weatherization activities will disturb ***more than*** 6 $ft^2$ of interior surface per room or 20 $ft^2$ of exterior surfaces in homes built prior to 1978. Level 2 containment consists of methods that define a work area that will not allow any dust or debris from work area to spread. Level 2 containment requires the covering of all horizontal surfaces, constructing barrier walls, sealing doorways, covering HVAC registers with approved materials, and closing windows to prevent the spread of dust and debris.

Measures requiring level 2 containment *may* include:

- Drilling holes in interior walls
- Drilling holes in exterior walls, removing painted siding
- Cutting attic access into ceiling or knee walls
- Planing a door in place
- Replacing door jambs and thresholds
- Replacing windows or doors
- Furnace replacements

Additionally, Level 2 containment must ***ALWAYS*** be used where any of the following is conducted (even if the activities will disturb less than the hazard de minimis levels within the Level 1 category):

- Window replacement
- Demolition of painted surface areas
- Using any of the following:
    - Open-flame burning or torching;
    - Machines to remove paint through high-speed operation without HEPA exhaust control; or
    - Operating a heat gun at temperatures at or above 1100 degrees Fahrenheit.

### D. Proper LSW Clean-Up and Debris Disposal

Following the containment standards in the previous section will minimize the level of effort required to properly clean up the job site. All dust, dirt, material scraps, containers, wrappers, and work related debris must be removed from the customer's home. A HEPA vacuum should be used to clean up the work areas. Further cleaning may be necessary based on the hazard.

At the conclusion of the job, once all workers have "cleaned" the work areas thoroughly, Weatherization workers must adhere to the following:

**Safe and Secure Disposal**

- Bag and gooseneck-seal all waste in 6-mil plastic bags
- Safely dispose of all waste in accordance with federal, state, and local regulations

**Visual Inspection Verification**

Checking the quality of worksite cleanliness is a two-phase process:

- Phase 1: Worker visual inspection during the cleaning process; look for any visible paint chips, dust, or debris as you clean, using proper techniques.
- Phase 2: Supervisor visual inspection after cleanup. There should be no evidence of settled dust following a cleanup effort. If dust is observed, the Weatherization crew must be required to repeat the cleaning.

If work is done outside the house, the grounds around the dwelling and all exterior horizontal surfaces should also be examined visually to make certain that all waste and debris have been removed and that paint chips were not left behind.

**Deferrals**

Arizona's WAP sub-grantees will follow the lead-based paint "deferral policy" to determine when it is prudent to defer certain Weatherization work in homes that have either tested positive or are assumed to have lead-based painted surfaces.

- First, the subgrantee should assess the following factors:

  1) Is the subgrantee prepared to work with lead-based paint? (i.e., have workers received training in LSW work practices - is the necessary equipment, such as HEPA vacuum cleaners, available; and does the agency's liability insurance cover work with lead-based paint);

  2) What is the condition of the painted surfaces in the house that might be specifically disturbed in the course of an allowable weatherization measure? (i.e., are they *seriously* deteriorated);

  3) What is the extent to which the specific energy efficiency measures determined by the audit will disturb painted surfaces? (i.e., will the disturbance likely generate dust in excess of OSHA minimums); and,

  4) Will the cost of doing LSW work represent a large portion of the total cost, such as to exceed the amount allowed by the state's health and safety plan (which could be the case if large amounts of lead-based paint surfaces will be disturbed)?

- Second, the grantee should determine, based on consideration of the above factors, whether to:

  1) Proceed with all the weatherization work, following LSW work practices; or
  2) Do some of the weatherization tasks, defer others; or
  3) Defer all the weatherization work

Deferral would mean postponing the work either until the Weatherization agency is prepared to work with lead-based paint, or until another funding source has been identified that can finance corrections to the problem LBP area that weatherization can be safely performed.

In cases where extensive LSW would be necessary, agencies are encouraged to arrange with other organizations, which are funded to do lead-based paint hazard control, to perform some of the more costly activities, such as risk assessment or clearance testing. In areas where there are no organizations performing such work, Weatherization agencies may choose to develop their capabilities (purchase of equipment and advanced training for subgrantee crews) for lead-based paint hazard control work, but they may not use DOE Weatherization funds for this purpose. In such a home, regular Weatherization work that does not disturb painted surfaces can be done.

**Funding of lead safe weatherization**

Whereas DOE funds may be used to pay for Weatherization activities that disturb lead-based painted surfaces while installing energy efficiency measures or for case-by-case testing, the funds may not otherwise be used for abatement, stabilization or control of lead-based paint hazards, or routine entrance and clearance testing.

However, U. S. Department of Housing and Urban Development (HUD) funds such as Community Development Block Grant (CDBG), lead hazard control programs and HOME Repair and Rehabilitation Program funds may be used to do this work. Also, U. S. Department of Health and Human Services' (HHS) Low-Income Home Energy Assistance Program (LIHEAP), may be used for certain expenses related to Lead Safe Weatherization.

Specifically, for DOE funding, agencies should budget LSW costs under health and safety as a separate cost category, excluded from the calculation of average cost per home. Lead Safe Weatherization costs include labor, material, insurance, training, and equipment.

**Liability issues**

Unless an agency has specifically purchased additional insurance to cover pollution occurrences, they probably do not have sufficient insurance for their work as required by the WAP's Program Year 2002 Annual Guidance, **Weatherization Program Notice 02-1**. It is likely that their general liability insurance has a pollution occurrence exclusion.

All Arizona Sub-grantees must have liability insurance that covers work in a home with lead-based paint before any LSW work is implemented. This liability insurance does not and should not cover lead abatement projects.

Abatement projects are extensive projects designed to permanently eliminate the lead-based paint hazard. Only work that HUD refers to as "interim controls" must be covered. It is important to use this policy to demonstrate to the insurer the limited nature of the paint disturbance and the precautions being taken to avoid liability. The cost of such insurance is an allowable DOE expense, and we urge agencies to seek ways to obtain the coverage at reasonable rates.

For insurance shopping purposes, there are features about Weatherization work that local agencies should use in making the case for the lower risk associated with the nature of Weatherization work, especially when compared to lead-based paint abatement and lead hazard control work:

- Weatherization is different from lead hazard control work and involves lesser levels of work associated with painted surfaces. In fact, the disturbance of painted surfaces, by comparison, is minimal and when it happens, is incidental to the purpose of the work - the installation of energy conserving measures.

- In addition, not all weatherization work involves disturbing painted surfaces and some homes are lead free, and so the *risk basis* for insurance rates - unlike insurance for lead hazard control work - should not be based on one hundred percent operations in a lead paint environment for every home weatherized.

DOE is involved with EPA and HUD in continuing discussions with the insurance industry about ways to qualify Weatherization agencies for more favorable rates. We also welcome suggestions from state and local agencies with experience in obtaining reasonable rates for this kind of work, which we will share with the Arizona subgrantees.

**Training**

Arizona's WAP requires that *when disturbance of painted surfaces is significant*, Weatherization workers will use LSW practices.

Arizona's WAP will provide or recognize prior participation in the following training opportunities to sub-grantee as required, taking into consideration each subgrantees mix of action items and allowable measures:

- LSW workshops provided by trainers who are certified in The HUD Lead Safe Work Practices.
- Peer-to-Peer training.
- Individual agency training on an as needed basis.

All training will utilize the Lead Safe Weatherization curriculum developed by Montana State University.

**7. Building Structure**

Building rehabilitation is beyond the scope of the Weatherization Assistance Program; however, Arizona Subgrantees frequently encounter homes in poor structural condition. Dwellings whose structural integrity is in question should be referred to the Arizona Department of Housing.

Weatherization services may need to be delayed until the dwelling can be made safe for crews and occupants (see Deferral Standards).

Incidental repairs necessary for the effective performance or preservation of weatherization materials are allowed if the cost of the weatherization material and incidental repair are cost justified by the audit. Examples of these limited repairs include sealing minor roof leaks to preserve new attic insulation and repairing water-damaged flooring as part of replacing a water heater.

**8. Electrical Issues**

The two primary energy-related health and safety electrical concerns are
1) Insulating homes that contain knob-and-tube wiring and
2) Identifying overloaded electrical circuits.

Older electric wiring, primarily knob-and-tube wiring, located in a wall cavity or exposed on an attic floor was originally intended by code to have *free air movement* for that would cool the wire when carrying an electric current. Laboratory tests have shown that retrofitting thermal insulation around electric wiring can cause it to overheat, resulting in a fire hazard.

Arizona program policy requires that subgrantees ensure that insulation around knob-and-tube wiring conforms with applicable codes in jurisdictions where the work is being performed.

*Serious electrical hazards exist when gross overloads are present.* Should auditors and crews find such existing problems, they must notify the owner verbally and in writing by the subgrantee WAP program manager.

Weatherization measures that involve the installation of new equipment such as air conditioners, heat pumps, or electric water heaters can exacerbate previously marginal overload problems to hazardous levels. The problem must also be noted in the client file. To the extent that these problems prevent adequate weatherization, the agency should consider repairing them on a case-by-case basis.

**9. Refrigerant Issues**

The replacement of air conditioners requires subgrantees to ensure that the requirements of the Clean Air Act 1990, section 608, as amended by 40 CFR 82, 5/14/93, be enforced. The appliance vendor, de-manufacturing center, or other entity recovering the refrigerant must possess EPA-approved section 608 types I or universal certification. Subgrantees must ensure they have appropriate protocols in place that comply with all standards relating to the disposal of the existing appliances.

**10. Other Code Compliance Issues**

It is the subgrantee's responsibility to ensure that weatherization-related work conforms with applicable codes in jurisdictions where the work is being performed.

**E. Deferral Standards**

The decision to defer work in a dwelling is difficult, but necessary, in some cases. This does not mean that assistance will never be available, but that work must be postponed until the problems can be resolved and/or alternative sources of help are found. Note that subgrantees, including crews and contractors, are expected to pursue reasonable options on behalf of the client, including referrals, and to use good judgment in dealing with difficult situations.

Subgrantees will develop guidelines and a standardized form for such situations. The form will include the client's name and address, dates of the audit/assessment and when the client was informed, a clear description of the problem, conditions under which weatherization could continue, the responsibility of all parties involved, and the client(s) signature(s) indicating that they understand and have been informed of their rights and options.

**Deferral conditions may include**:

- The client has known health conditions that prohibit the installation of insulation and other weatherization materials.
- The building structure or its mechanical systems, including electrical and plumbing, are in such a state of disrepair that failure is imminent and the conditions cannot be resolved cost-effectively.
- The house has sewage or other sanitary problems that would further endanger the client and weatherization installers if weatherization work were performed.
- The house has been condemned or electrical, heating, plumbing, or other equipment has been "red tagged" by local or state building officials or utilities.
- Moisture problems are so severe they cannot be resolved under existing health and safety measures and with minor repairs.
- Dangerous conditions exist due to high carbon monoxide levels in combustion appliances, and cannot be resolved under existing health and safety measures.
- The client is uncooperative, abusive, or threatening to the crew, subcontractors, auditors, inspectors, or others who must work on or visit the house.
- The extent and condition of lead-based paint in the house would potentially create further health and safety hazards.
- In the judgment of the energy auditor, any condition exists which may endanger the health and/or safety of the work crew or subcontractor, the work should not proceed until the condition is corrected.

## REFRIGERATOR REPLACEMENT POLICY

The following criterion applies to replacement refrigerators:

**ELIGIBILITY FOR REPLACEMENT**

Weatherization Program Notice 00-5 lists the types of refrigerators that may be installed with U.S. Department of Energy (DOE) funds. Refrigerators and refrigerator-freezers with manual, automatic, or partial automatic defrost are eligible. Units must comply with UL-250 and with energy efficiency standards established in the National Appliance Energy Conservation Act of 1987 that are periodically updated. New replacement units may **not** have through-the-door ice or water service since this feature increases energy use.

To qualify for replacement, the refrigerator replacement unit must result in a savings-to-investment ratio (SIR) of 1.0 or greater.

To determine the SIR, one of the following methods must be used to determine the energy use of the existing unit:

- Refrigerator replacement analysis tools that utilize the Association of Home Appliance Manufacturers or other approved refrigerator databases.
- Meter electric usage of the existing unit utilizing an approved meter. A list of approved meters is available from the OEP.

## METERING REQUIREMENTS

- Meter at least 10% of units replaced — It is not required to meter every existing refrigerator that is replaced. Initially, as the program gains experience, DOE will require metering on at least 10% of the units replaced. Units that cannot be located in the Association of Home Appliance Manufacturers, or other refrigerator databases, may make up all or most of the 10% requirement.

- Meter at least 2 hours — The minimum metering duration required to obtain results accurate enough to make a reliable replacement decision has been debated for several years. DOE believes a two-hour minimum metering duration is an appropriate compromise.

## MATERIALS

- New refrigerators shall:
  - Not exceed the size of the replaced unit.
  - Have a minimum 1-year warranty.

## INSTALLATION

- The electrical outlet shall:
  - Provide the voltage specified on the ID plate of the new refrigerator.
  - Be properly grounded and/or protected with a properly functioning GFCI device.
  - Be located within reach of the refrigerator without the use of an extension cord.
  - Be in good condition with nothing visibly wrong (e.g., not cracked or broken, and no spark, smoke, or burn marks, etc.).
  - Meet refrigerator manufacturer's specifications for space and clearances.

- The contractor shall:
  - Deliver and install the new refrigerator.
  - Level the unit to ensure proper operation.
  - Ensure that door hinges are on the appropriate side.
  - Instruct the customer on refrigerator operation.
  - Deliver warranties and operating manuals to the customer.
  - Set temperature controls appropriately.

## DISPOSAL

- The contractor shall:
  - Take unit out of service. Make sure the existing refrigerator, removed from the house, and **DOES NOT** find its way back onto the electric grid.
  - Dispose of unit in an environmentally responsible manner. All refrigerators replaced must be properly disposed of according to the environmental standards in the Clean Air Act of 1990, section 608, as amended by Final Rule 40 CFR 82, May 14, 1993.
  - Take unit to a de-manufacturing facility or incorporate disposal requirements in vendor contract.
  - Remove all packing materials from the customer's premises.

## REPORTING

- The sub-grantee shall record the following information for both the existing and replacement refrigerators:

- Manufacturer (for years available)
- Brand
- Year of manufacture
- Model number
- Type (e.g., side-by-side, top freezer)
- Database estimated kWh/yr

- On metered units, the sub-grantee shall provide an estimated annual kWh usage and the duration of metered data.
- Provide saving to Investment Ratio for the replacement refrigerator.

**WRITTEN AUTHORIZATION**

There may be cases where it is the best interest of the client that a refrigerator be installed that does not meet the requirements of the Weatherization Assistance Program Refrigerator Replacement Policy. In these cases, written authorization must be obtained from OEP.

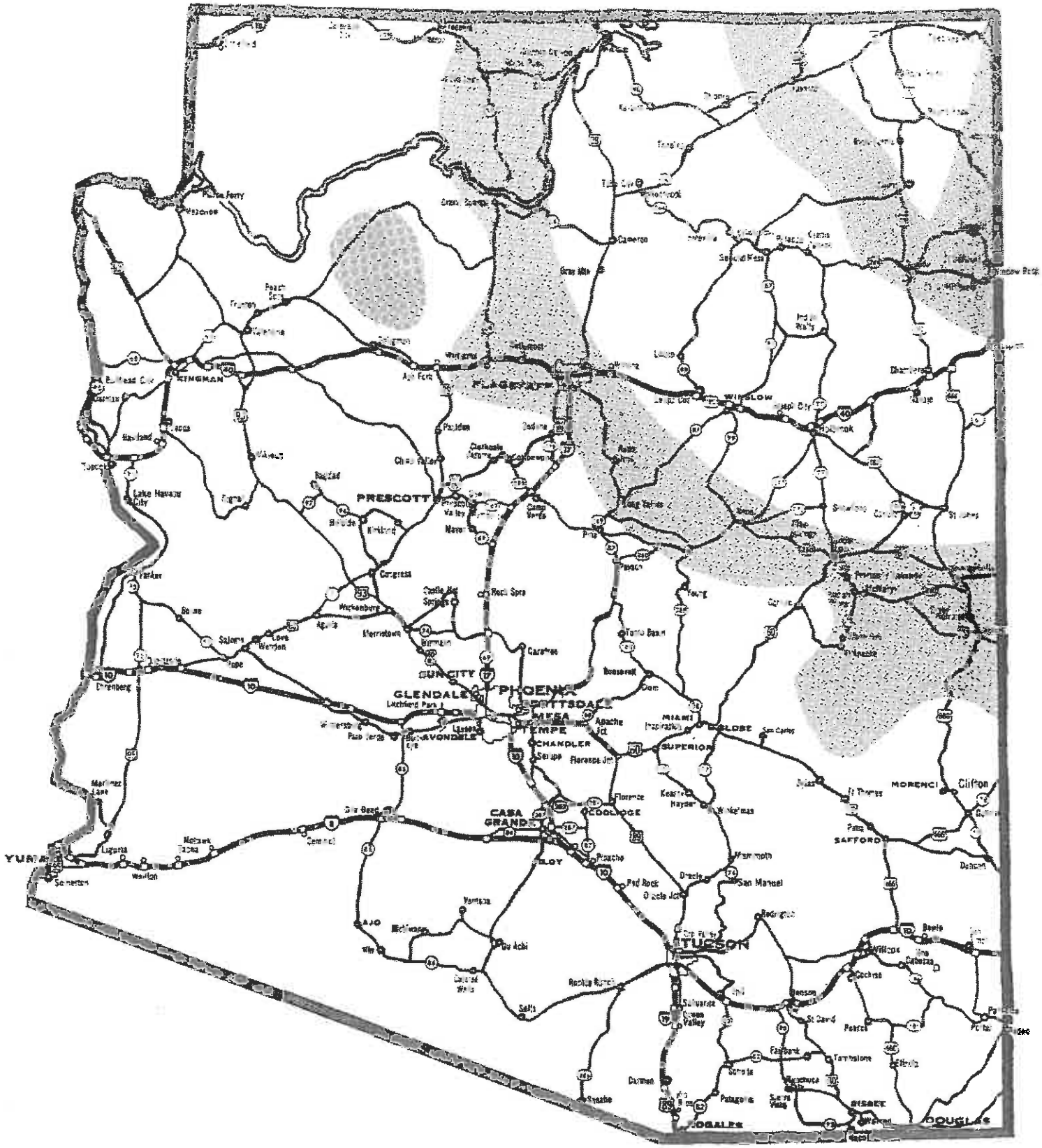


## Climate Zone 1 Locations

Flagstaff
Fort Defiance
Grand Canyon
Happy Jack
Heber
Kayenta
McNary
Nutrioso
Pinetop-Lakeside
Show Low
Springerville
Whiteriver
Williams
Window Rock

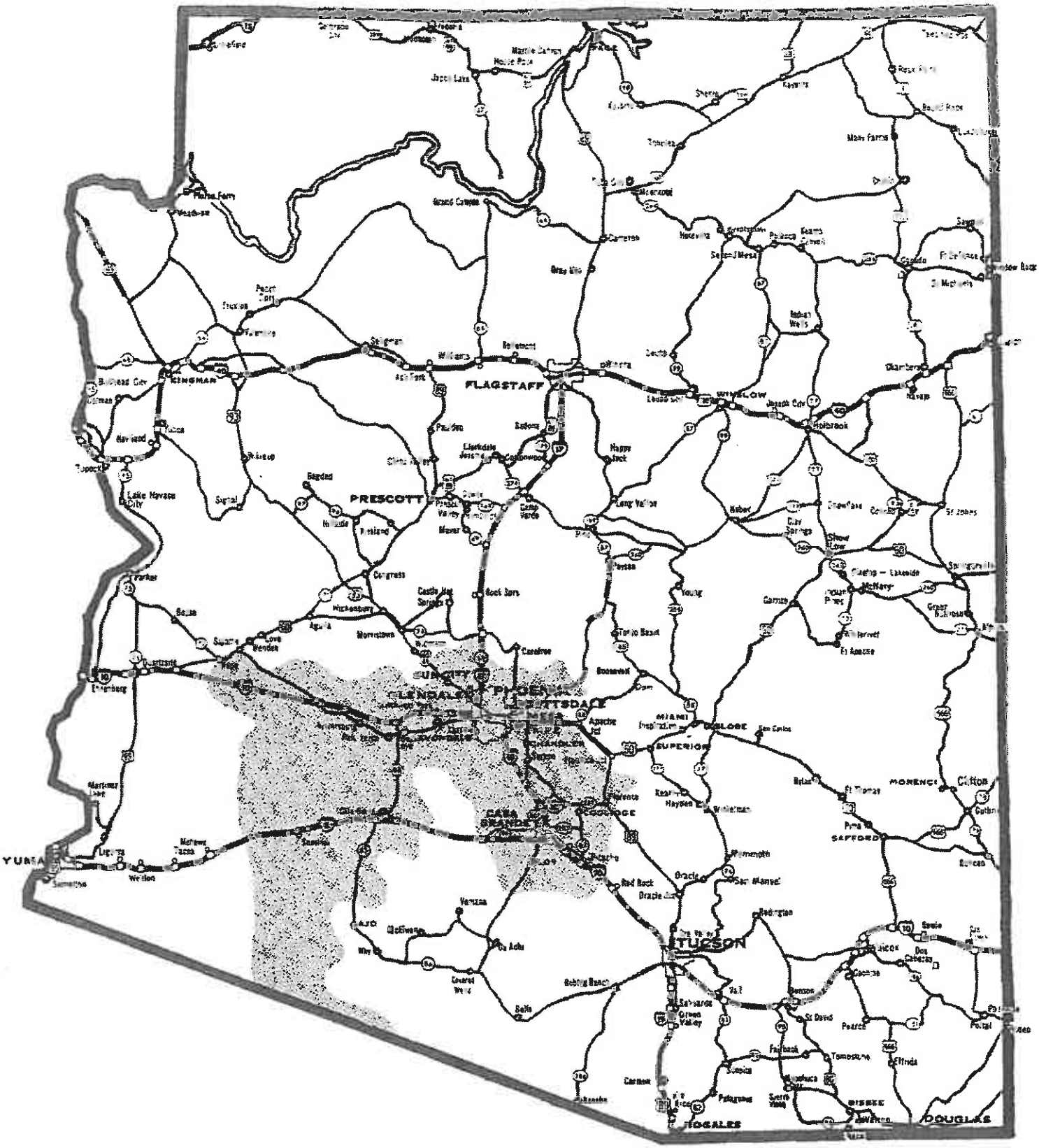


## Climate Zone 2 Locations

Apache Junction
Avondale
Buckeye
Casa Grande
Chandler
Coolidge
Eloy
Florence
Gila Bend
Glendale
Litchfield Park
Mesa
Phoenix Area
Picacho
Scottsdale
Sun City
Tempe

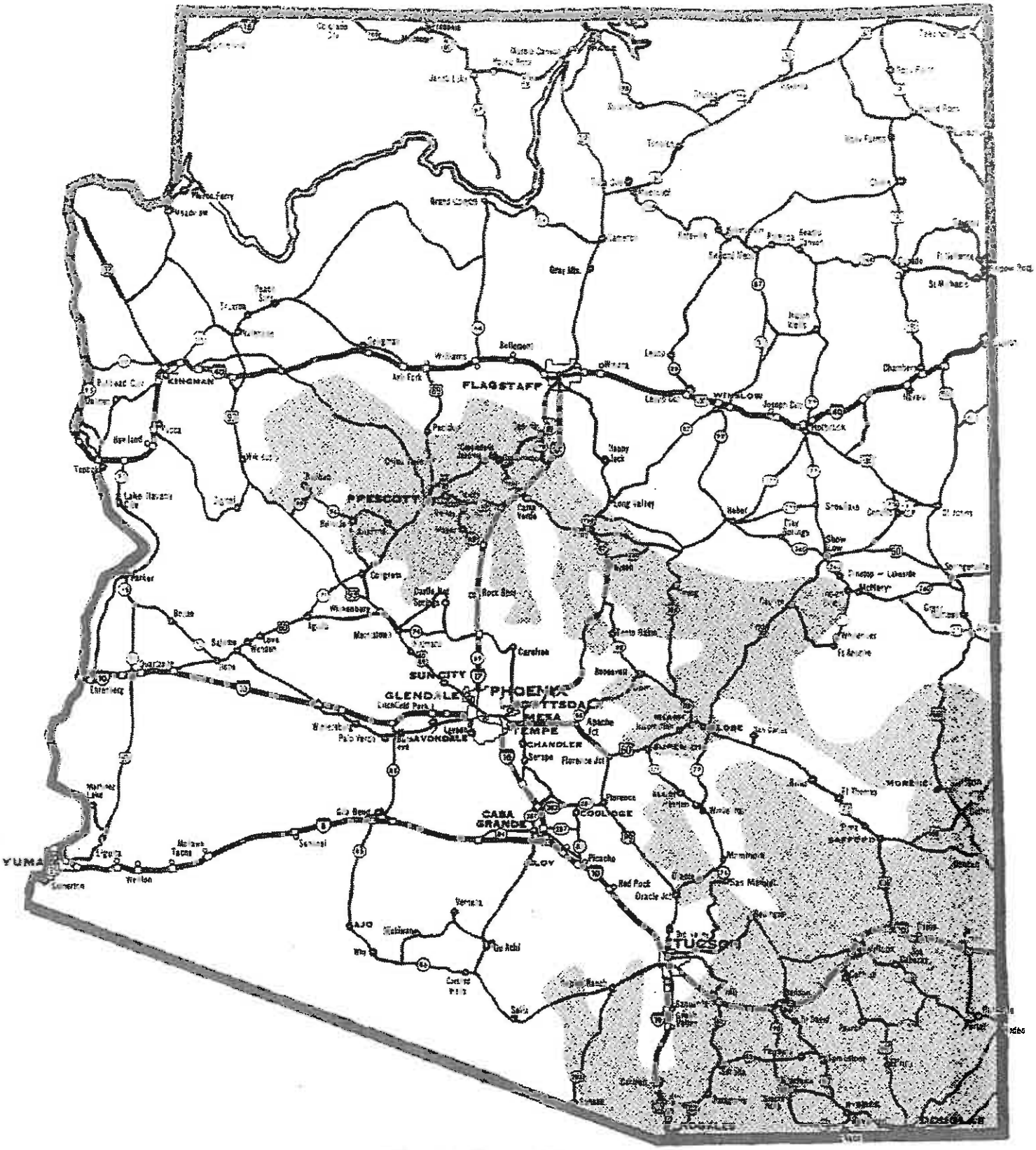


## Climate Zone 3 Locations

| | | |
|---|---|---|
| Bagdad | Douglas | Oracle |
| Bisbee | Duncan | Patagonia |
| Campe Verde | Globe | Payson |
| Chino Valley | Mayer | Prescott |
| Clifton | Miami | Sedona |
| Cottonwood | Nogales | Willcox |

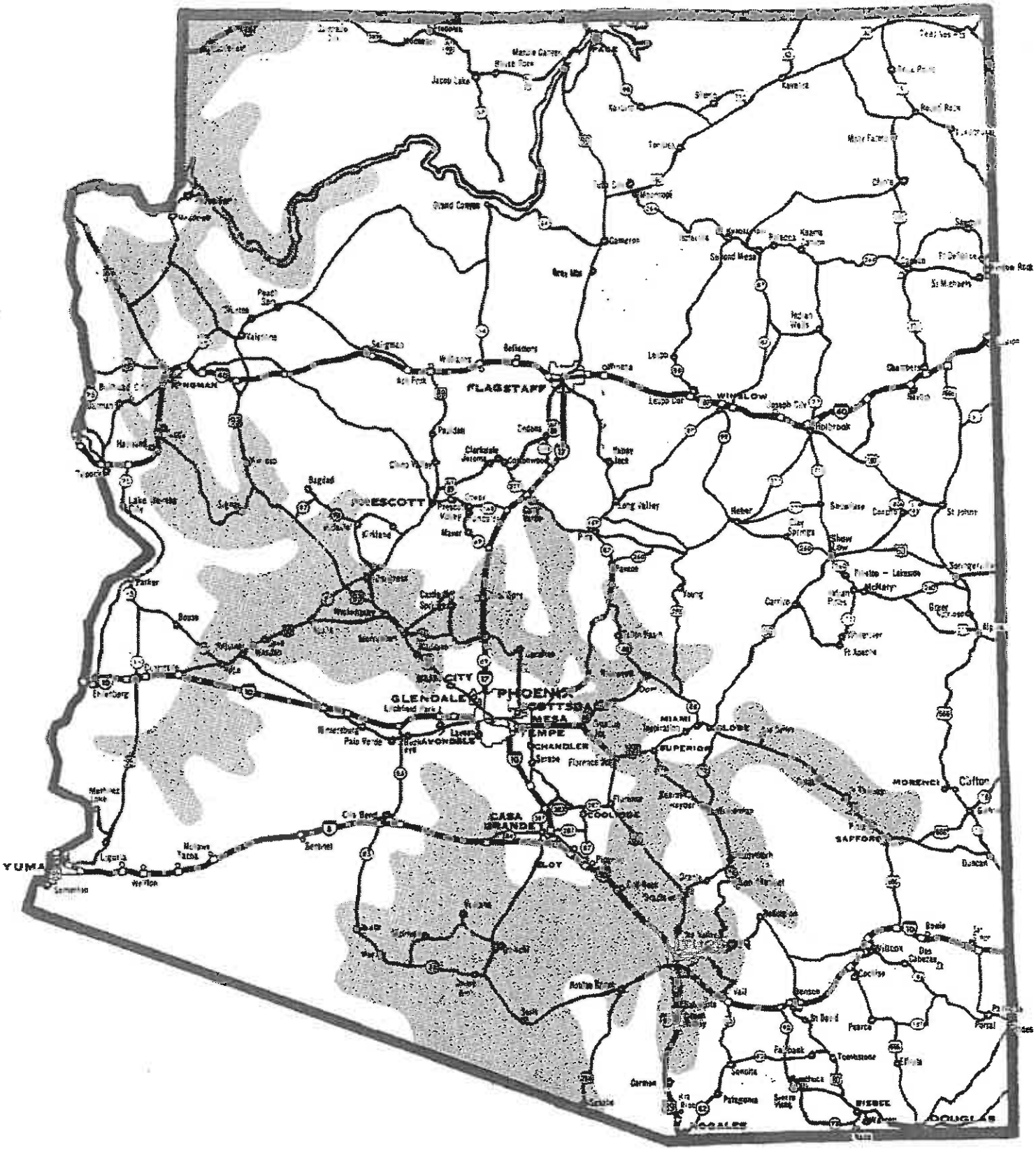


## Climate Zone 4 Locations

Aguila
Ajo
Carefree
Fort Thomas
Green Valley
Gu Achi
Hayden
Kearney
Kingman
Morristown
Pima
Safford
Salome
San Carlos
Sells
South Tucson
Superior
Tucson

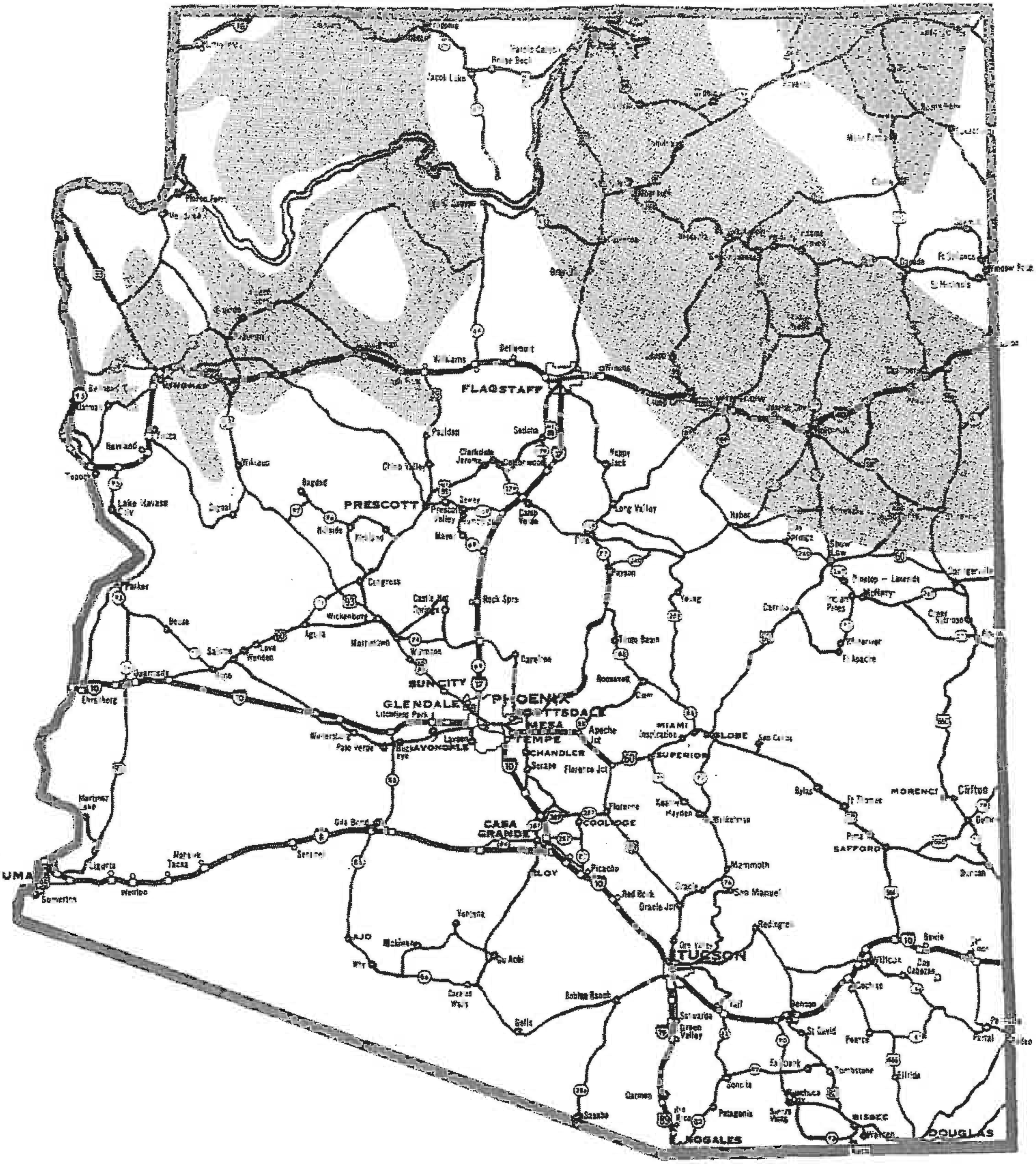


## Climate Zone 5 Locations

Ash Fork
Colorado City
Fredonia
Holbrook
Joseph City
Keams Canyon
Mocassin
Moenkopi
Page
Peach Spring
Polacca
Saint Johns
Seligman
Snowflake
Tuba City
Winslow

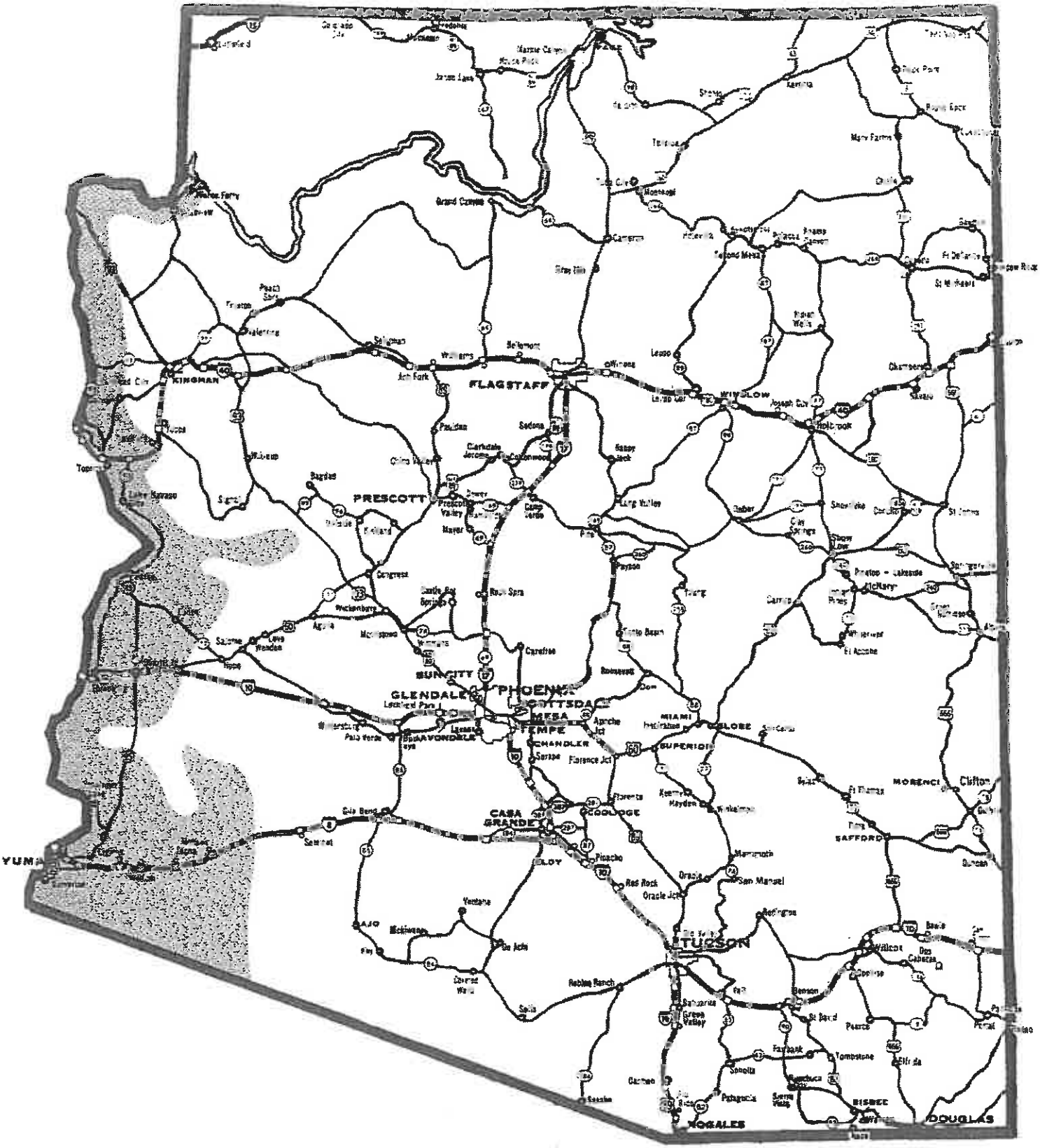


## Climate Zone 6 Locations

Bullhead City
Ehrenberg
Lake Havasu City
Parker
Quartzsite
Somerton
Wellton
Yuma

**FFATA (Federal Funding Accountability and Transparency Act) Reporting Requirements**
Public Law 109–282; 31 U.S.C. 6101

**This section must be completed for any awards greater than or equal to $25,000**

| | |
|---|---|
| Name of Entity Receiving Award | Gila County |
| Amount of Award | $135,693.00 |
| Funding Agency | Governor's Office of Energy Policy |
| CFDA number | 93.568 |
| Award Title | AZ Low-Income Weatherization Assistance |

Location: City Globe State AZ Congressional District 1

DUNS number 24071339

1) Is 80% or more of annual gross revenues from Federal awards? Yes [x] No [ ]

2) Do you receive $25 million or more annually from Federal awards? Yes [ ] No [x]

**If you answered Yes to both questions, you must provide the following:**

Names and Total Compensation of Top Five paid executives:

| | | | | |
|---|---|---|---|---|
| 1#: | Name | | Total Compensation | |
| 2#: | Name | | Total Compensation | |
| 3#: | Name | | Total Compensation | |
| 4#: | Name | | Total Compensation | |
| 5#: | Name | | Total Compensation | |

*GILA COUNTY ATTORNEY*
*Daisy Flores*

Re: County Attorney's Office approval of IGA pursuant to A.R.S. § 11-952(D).

To whom it may concern:

The County Attorney's Office has reviewed the Intergovernmental Agreement attached to this agenda item and has determined that it is in its "proper form" and "is within the powers and authority granted under the laws of this state to such public agency or public procurement unit" pursuant to A.R.S. § A.R.S. § 11-952(D).

## Explanation of the Gila County Attorney's Office Intergovernmental Agreement (IGA) Review

A.R.S. § 11-952(D) requires that

> every agreement or contract involving any public agency or public procurement unit of this state . . . before its execution, shall be submitted to the attorney for each such public agency or public procurement unit, who shall determine whether the agreement is in proper form and is within the powers and authority granted under the laws of this state to such public agency or public procurement unit.

In performing this review, the County Attorney's Office reviews IGAs to see that they are in "proper form" prior to their execution. "Proper form" means that the contract conforms to fundamental contract law, conforms to specific legislative requirements, and is within the powers and authority granted to the public agency. It does not mean that the County Attorney's Office approves of or supports the policy objectives contained in the IGA. That approval is solely the province of the public agency through its elected body.

Likewise, this approval is not a certification that the IGA has been properly executed. Proper execution can only be determined after all the entities entering into the IGA have taken legal action to approve the IGA. There is no statutory requirement for the County Attorney's Office to certify that IGAs are properly executed.

Nonetheless, it is imperative for each public agency to ensure that each IGA is properly executed because A.R.S. § 11-952(F) requires that "[a]ppropriate action … applicable to the governing bodies of the participating agencies approving or extending the duration of the … contract shall be necessary before any such agreement, contract or extension may be filed or become effective." This can be done by ensuring that the governing body gives the public proper notice of the meeting wherein action will be taken to approve the IGA, that the item is adequately described in the agenda accompanying the notice, and that the governing body takes such action. Any questions regarding whether the IGA has been properly executed may be directed to the County Attorney's Office.

Proper execution of IGAs is important because A.R.S. § 11-952(H) provides that "[p]ayment for services under this section shall not be made unless pursuant to a fully approved written contract." Additionally, A.R.S. § 11-952(I) provides that "[a] person who authorizes payment of any monies in violation of this section is liable for the monies paid plus twenty per cent of such amount and legal interest from the date of payment."

The public agency or department submitting the IGA for review has the responsibility to read and understand the IGA in order to completely understand its obligations under the IGA if it is ultimately approved by the public entity's board. This is because while the County Attorney's Office can approve the IGA as to form, the office may not have any idea whether the public agency has the capacity to actually comply with its contractual obligations. Also, the County Attorney's Office does not monitor IGA compliance. Hence the public entity or submitting department will need to be prepared to monitor their own compliance. A thorough knowledge of the provisions of the IGA will be necessary to monitor compliance.

Before determining whether an IGA contract "is in proper form," the County Attorney's Office will answer any questions or concerns the public agency has about the contract. It is the responsibility of the public agency or department submitting the IGA for review to ask any specific questions or address any concerns it has about the IGA to the County Attorney's Office at the same time they submit the IGA for review. Making such an inquiry also helps improve the County Attorney's Office review of the IGA because it will help focus the review on specific issues that are of greatest concern to the public agency. Failing to make such an inquiry when the agency does have issues or concerns will decrease the ability of the County Attorney's Office to meaningfully review the IGA.

**ARF-1012** **Consent Agenda Item 5- B**

**Regular BOS Meeting**

**Meeting Date:** 01/10/2012

| | | | |
|---|---|---|---|
| Submitted For: | Kendall Rhyne, Chief Probation Officer | Submitted By: | Lisa King, Administrative Clerk Sr., Superior Court |
| Department: | Superior Court | Division: | Probation Department |
| Fiscal Year: | 2012 | Budgeted?: | No |
| Contract Dates Begin & End: | October 29, 2011 - October 28, 2012 | Grant?: | No |
| Matching Requirement?: | No | Fund?: | Renewal |

Presenter's Name:

---

## Information

### Request/Subject

Renewal of Limited Use Agreement for Detention Services No. 08-99-0015 between the United States Marshals Service and Gila County, on behalf of the Gila County Juvenile Detention Center, for the period of October 29, 2011 through October 28, 2012.

### Background Information

The Gila County Juvenile Detention Center is currently providing detention services to the United States Marshals Service by contracting bed space for the custody and care of Federal detainees at a rate of $131.40 per day per detainee. This service generates additional revenue for Gila County.

### Evaluation

The purpose of this Limited Use Agreement for Detention Services No. 08-99-0015 between the United States Marshals Service and Gila County, on behalf of the Gila County Juvenile Detention Center, is to formalize an oral agreement between the United States Marshals Service and Gila County, on behalf of the Gila County Juvenile Detention Center, for the custody and care of Federal detainees during the period of October 29, 2011 through October 28, 2012.

### Conclusion

Limited Use Agreement for Detention Services No. 08-99-0015 between the United States Marshals Service and Gila County, on behalf of the Gila County Juvenile Detention Center, allows the Gila County Juvenile Detention Center to continue providing detention services to the United States Marshals Service for the custody and care of Federal detainees at a rate of $131.40 per day per detainee for a total of 1,200 detainee days amounting to $157,680 for Gila County.

### Recommendation

The Gila County Probation Department recommends the approval of the Limited Use Agreement for Detention Services No. 08-99-0015 between the United States Marshals Service and Gila County, on behalf of the Gila County Juvenile Detention Center, for the period of October 29, 2011 through October 28, 2012.

Suggested Motion

Approval of the renewal of the Limited Use Agreement for Detention Services No. 08-99-0015 between the United States Marshals Service and Gila County, on behalf of the Gila County Juvenile Detention Center, in the amount of $157,680 to allow the Gila County Juvenile Detention Center to continue to provide detention services to the United States Marshals Service for the period of October 29, 2011, through October 28, 2012.

---

Attachments

Limited Use Agreement No. 08-99-0015 FY2012

Original Limited Use Agreement No. 08-99-0015

Limited Use Agreement Attachment 1

Legal Explanation

Limited Use Agreement for Detention Services No. 08-99-0015

between

United States Marshals Service

and

Gila County, on behalf of the

Gila County Juvenile Detention Center

# UNITED STATES MARSHALS SERVICE
# LIMITED USE AGREEMENT (LUA) FOR DETENTION SERVICES

**SECTION I.**

| 1. DATE OF AGREEMENT | 2. AGREEMENT NUMBER | 3. JAIL CODE |
|---|---|---|
| 10/28/11 | 08-99-0015 | 8HX |

4. ISSUING OFFICE
UNITED STATES MARSHALS SERVICE
PRISONER OPERATIONS DIVISION
2604 JEFFERSON DAVIS HIGHWAY
ALEXANDRIA, VA 22301-1025

5. ACCOUNTING DATA

a. RDS NUMBER: 12-005
b. APPROPRIATION: 15X1020
c. FISCAL YEAR: 2011/12

6. LOCAL GOVERNMENT FACILITY NAME AND ADDRESS:

Gila County Juvenile Detention Center
1100 E. Monroe Street
Globe, AZ 85501

7. USMS UTILIZATION AND COST DATA

a. TIME PERIOD: *** 10/29/11 – 10/28/12 (see below)**

b. MAXIMUM PRISONER DAYS: **1,200**

c. JAIL DAY RATE: $131.40

d. TOTAL COST: $157,680.00

| 8. REQUESTING DISTRICT | 9. DIST. NO. |
|---|---|
| AZ | 08 |

**SECTION II.** SPECIFIC TERMS AND CONDITIONS OF THIS AGREEMENT

1. The purpose of this LUA is to formalize an oral agreement between the United States Marshals Service (USMS) and local government listed above for the custody and care of Federal prisoners during the period of time shown in block 7a of this document.

2. This LUA is predicated upon the Federal Government's requirement for detention space and services for Federal prisoners and the local government's willingness to provide such services at the same level as those provided to local prisoners.

3. The authority for this agreement is 18 USC 4002 and 4086.

4. *The jail day rate covers one (1) person per "prisoner day". The Federal Government may not be billed for two* (2) days when a prisoner is admitted one evening and removed the following morning. The Local Government may bill for the day of arrival, but not for the day of departure.

**SECTION III.** BILLING INSTRUCTIONS

Mail invoice to: United States Marshals Service
District of Arizona
Sandra Day O'Connor U.S. Courthouse, Suite 270
401 W. Washington Street, SPC 64
Phoenix, AZ 85003-2159

**SECTION IV.** AUTHORIZING OFFICIAL

SIGNATURE: _____ DATE: NOV -8 2011

Jackie Gomez, Grants Specialist

*** This is the final LUA for this facility. The Local Government must complete and submit a Cost Sheet for Detention Services, USM-243, immediately to enter into an Intergovernmental Agreement (IGA).**

Gila County Board of Supervisors

_____
Tommie C. Martin, Chairman

Attest:

_____
Marian Sheppard, Chief Deputy Clerk

Approved as to form:

_____
Bryan B. Chambers,
Chief Deputy County Attorney

# UNITED STATES MARSHALS SERVICE
# LIMITED USE AGREEMENT (LUA) FOR DETENTION SERVICES

**SECTION I.**

| 1. DATE OF AGREEMENT | 2. AGREEMENT NUMBER | 3. JAIL CODE |
|---|---|---|
| 10/29/2010 | 08-99-0015 | 8HX |

| | |
|---|---|
| 4. ISSUING OFFICE<br><br>UNITED STATES MARSHALS SERVICE<br>PRISONER OPERATIONS DIVISION<br>2604 Jefferson Davis Hwy<br>Alexandria, VA 22301 | 5. ACCOUNTING DATA<br><br>a. RDS NUMBER: 11-020<br>b. APPROPRIATION: 15X1020<br>c. FISCAL YEAR: 2010/11 |
| 6. LOCAL GOVERNMENT FACILITY NAME AND ADDRESS:<br><br>Gila County Juvenile Detention Center<br>1100 E. Monroe Street<br>Globe, AZ 85501 | 7. USMS UTILIZATION AND COST DATA<br><br>a. TIME PERIOD: 10/29/2010 – 10/28/2011<br><br>b. MAXIMUM PRISONER DAYS: 150<br><br>c. JAIL DAY RATE: $131.40<br><br>d. TOTAL COST: $19,710.00 |
| 8. REQUESTING DISTRICT<br>AZ<br><br>9. DIST. NO.<br>08 | |

**SECTION II.** SPECIFIC TERMS AND CONDITIONS OF THIS AGREEMENT

1. The purpose of this LUA is to formalize an oral agreement between the United States Marshals Service (USMS) and Local Government listed above for the custody and care of Federal prisoners during the period of time shown in block 7a of this document.

2. This LUA is predicated upon the Federal Government's requirement for detention space and services for Federal prisoners and the local government's willingness to provide such services at the same level as those provided to local prisoners.

3. The authority for this agreement is 18 USC 4002 and 4086.

4. The jail day rate covers one (1) person per "prisoner day". The Federal Government may not be billed for two (2) days when a prisoner is admitted one evening and removed the following morning. The Local Government may bill for the day of arrival, but not for the day of departure.

**SECTION III.** BILLING INSTRUCTIONS

Mail invoice to: United States Marshals Service
District of Arizona
Sandra Day O'Connor U.S. Courthouse, Suite 270
401 W. Washington Street, SPC 64
Phoenix, AZ 85003-2159

**SECTION IV.** AUTHORIZING OFFICIAL

SIGNATURE:_____ DATE:_____

Mary Horsey
Grants Analyst

Gila County Board of Supervisors

_____

Michael A. Pastor, Chairman

Attest:

_____

Marian Sheppard, Chief Deputy Clerk

Approved as to form:

_____

Bryan B. Chambers,
Chief Deputy County Attorney

# LIMITED USE AGREEMENT
## Between The United States Marshals Service and Gila County Juvenile Center
## Attachment #1

Parties:

United States Marshals Service
405 W. Congress St., #2300
Tucson, AZ 85701

Gila County Juvenile Center
1425 E. South St.
Globe, AZ 85501

Purpose:
The purpose of this attachment to the existing Limited Use Agreement (LUA) is to address the U.S. Marshals Service's need to exceed the estimated prisoner days and cost indicated in the agreement. Note that this is not a new contractual agreement but merely notification that original LUA estimates are insufficient to meet current U.S. Marshals Service juvenile housing demands.

Article I – Total Prisoner Days and Contract Amount:

1. The existing LUA currently has a listed guideline/estimate of 150 prisoner days at a cost of $19,710.00.
2. It is recognized that the existing guideline/estimate for both prisoner days and cost have been and will continue to be exceeded in order to accommodate the operational needs of the United States Marshals Service.
3. At minimum, the anticipated needs will be twice of the original guideline/estimate.

Article II – Per Diem:

1. The per diem rate will remain at $131.40 per juvenile.

Billing:

Gila County Juvenile Center will transmit monthly billing invoices as is currently provided for.

Michael A. Pastor 6/28/11
Board Of Supervisors Date
Michael A. Pastor, Chairman

Raymond Kaneda 5/6/2011
Assistant Chief Deputy Date

Attest:

Marian Sheppard, Chief Deputy Clerk

Approved as to form:

Bryan B. Chambers,
Chief Deputy County Attorney

*GILA COUNTY ATTORNEY*
*Daisy Flores*

Re: County Attorney's Office approval of IGA pursuant to A.R.S. § 11-952(D).

To whom it may concern:

The County Attorney's Office has reviewed the Intergovernmental Agreement attached to this agenda item and has determined that it is in its "proper form" and "is within the powers and authority granted under the laws of this state to such public agency or public procurement unit" pursuant to A.R.S. § A.R.S. § 11-952(D).

## Explanation of the Gila County Attorney's Office Intergovernmental Agreement (IGA) Review

A.R.S. § 11-952(D) requires that

> every agreement or contract involving any public agency or public procurement unit of this state . . . before its execution, shall be submitted to the attorney for each such public agency or public procurement unit, who shall determine whether the agreement is in proper form and is within the powers and authority granted under the laws of this state to such public agency or public procurement unit.

In performing this review, the County Attorney's Office reviews IGAs to see that they are in "proper form" prior to their execution. "Proper form" means that the contract conforms to fundamental contract law, conforms to specific legislative requirements, and is within the powers and authority granted to the public agency. It does not mean that the County Attorney's Office approves of or supports the policy objectives contained in the IGA. That approval is solely the province of the public agency through its elected body.

Likewise, this approval is not a certification that the IGA has been properly executed. Proper execution can only be determined after all the entities entering into the IGA have taken legal action to approve the IGA. There is no statutory requirement for the County Attorney's Office to certify that IGAs are properly executed.

Nonetheless, it is imperative for each public agency to ensure that each IGA is properly executed because A.R.S. § 11-952(F) requires that "[a]ppropriate action … applicable to the governing bodies of the participating agencies approving or extending the duration of the … contract shall be necessary before any such agreement, contract or extension may be filed or become effective." This can be done by ensuring that the governing body gives the public proper notice of the meeting wherein action will be taken to approve the IGA, that the item is adequately described in the agenda accompanying the notice, and that the governing body takes such action. Any questions regarding whether the IGA has been properly executed may be directed to the County Attorney's Office.

Proper execution of IGAs is important because A.R.S. § 11-952(H) provides that "[p]ayment for services under this section shall not be made unless pursuant to a fully approved written contract." Additionally, A.R.S. § 11-952(I) provides that "[a] person who authorizes payment of any monies in violation of this section is liable for the monies paid plus twenty per cent of such amount and legal interest from the date of payment."

The public agency or department submitting the IGA for review has the responsibility to read and understand the IGA in order to completely understand its obligations under the IGA if it is ultimately approved by the public entity's board. This is because while the County Attorney's Office can approve the IGA as to form, the office may not have any idea whether the public agency has the capacity to actually comply with its contractual obligations. Also, the County Attorney's Office does not monitor IGA compliance. Hence the public entity or submitting department will need to be prepared to monitor their own compliance. A thorough knowledge of the provisions of the IGA will be necessary to monitor compliance.

Before determining whether an IGA contract "is in proper form," the County Attorney's Office will answer any questions or concerns the public agency has about the contract. It is the responsibility of the public agency or department submitting the IGA for review to ask any specific questions or address any concerns it has about the IGA to the County Attorney's Office at the same time they submit the IGA for review. Making such an inquiry also helps improve the County Attorney's Office review of the IGA because it will help focus the review on specific issues that are of greatest concern to the public agency. Failing to make such an inquiry when the agency does have issues or concerns will decrease the ability of the County Attorney's Office to meaningfully review the IGA.

**ARF-1021** **Consent Agenda Item 5- C**

**Regular BOS Meeting**

**Meeting Date:** 01/10/2012

| | | | |
|---|---|---|---|
| Submitted For: | Kendall Rhyne, Chief Probation Officer | Submitted By: | Lisa King, Administrative Clerk Sr., Superior Court |
| Department: | Superior Court | Division: | Probation Department |
| Fiscal Year: | 2011 | Budgeted?: | Yes |
| Contract Dates Begin & End: | 10/1/08 through 3/31/11 | Grant?: | No |
| Matching Requirement?: | No | Fund?: | Replacement |

Presenter's Name:

---

Information

Request/Subject

Release of Claims to close Contract No. CMK0L090002 between the Bureau of Indian Affairs and Gila County, on behalf of the Gila County Juvenile Detention Center.

Background Information

The Gila County Juvenile Detention Center has contracted with the Bureau of Indian Affairs for several years. This contract is an excellent source of income for Gila County. The detention center provides services for the Bureau of Indian Affairs by contracting bed space for tribal juveniles at a rate of $131.40 per day per juvenile from the Truxton Canon Agency, the Colorado River Indian Tribe and the Pascua Yaqui Tribe.

Evaluation

This Release of Claims to Contract No. CMK0L090002 confirms that all financial obligations of the Bureau of Indian Affairs to Gila County, on behalf of the Gila County Juvenile Detention Center, have been satisfied for services rendered under Contract No. CMK0L090002. No future claims will be permitted against Contract No. CMK0L090002.

Attached are the following:
Amendment No. 9 to Conract No. CMK0L090002 added $215 in additional funding.
Amendment No. 7 to Contract No. CMK0L090002 added $142,000 in additional funding and extended the period of performance to December 31, 2010.
Amendment No. 6 to Contract No. CMK0L090002 added $175,000 in additional funding.
Amendment No. 4 to Contract No. CMK0L090002 added $123,000 in additional funding and extended the period of performance to September 30, 2010.
Amendment No. 3 to Contract No. CMK0L090002 added $22,245 in additional funding.
Amendment No. 1 to Contract No. CMK0L090002 added $28,166 in additional

funding.
Original Contract No. CMK0L090002 between Bureau of Indian Affairs and Gila County, on behalf of the Gila County Juvenile Detention Center.

Not attached are the following amendments:
Amendment No. 8 to Contract No. CMK0L090002 extended the period of performance from December 31, 2010 through March 31, 2011.
Amendment No. 5 to Contract No. CMK0L090002 administratively transferred the contract from the Southwest Regional Office in Albuquerque, New Mexico to the Bureau of Indian Affairs, Western Regional Office, 2600 N. Central Avenue, 4th Floor, Phoenix, Arizona 85004
Amendment No. 2 to Contract No. CMK0L090002 extended the period of performance from October 1, 2009 through December 31, 2009.

Conclusion

This Release of Claims to Contract No. CMK0L090002 finalizes all financial obligations of the Bureau of Indian Affairs to Gila County, on behalf of the Gila County Juvenile Detention Center, and all claims for services rendered under Contract No. CMK0L090002 are satisfied.

Recommendation

The Gila County Probation Department recommends approval of the Release of Claims to Contract No. CMK0L090002 between the Bureau of Indian Affairs and Gila County, on behalf of the Gila County Juvenile Detention Center.

Suggested Motion

Approval of the Release of Claims to Contract No. CMK0L090002 between the Bureau of Indian Affairs and Gila County, on behalf of the Gila County Juvenile Detention Center, to finalize and close out this contract.

---

Attachments

Release of Claims
Amendment No. 9
Amendment No. 7
Amendment No. 6
Amendment No. 4
Amendment No. 3
Amendment No. 1
Original Contract No. CMK0L090002

Release of Claims

to

Contract No. CMK0L090002

between

Bureau of Indian Affairs

and

Gila County, on behalf of the

Gila County Juvenile Detention Center

UNITED STATES
DEPARTMENT OF THE INTERIOR

# RELEASE OF CLAIMS

Contract Number

**CMK0L090002**

Award Date

**10-01-2008**

WHEREAS, by the terms of the above contract for **Juvenile Detention Services, for the BIA Office of Justice Services Agency,** entered into by the United States of America, hereinafter also referred to as the United States, and the contractor, **County of Gila, 1400 E. Ash Street, Globe, AZ 85501-1093**, it is provided that after completion of all work, and prior to final payment, the contractor will furnish the United States with a release of all claims:

NOW, THEREFORE, in consideration of the above premises and the payment by the United States to the contractor of the amount now due under the contract, to wit, the sum of zero, the contractor hereby remises, releases, and forever discharges the United States, its officers agents, and employees, of and from all manner of debts, dues, liabilities, obligations, accounts, claims, and demands whatsoever, in law and in equity, under or by virtue of the said contract, except:

No Exception

IN WITNESS WHEREOF, the contractor has executed this release this _____ day of January, 20 12.

Gila County, on behalf of
Gila County Juvenile Detention
(Contractor)

By _____
(Signature)

☐ Corporation ☐ Joint Venture
☐ Partnership ☐ Individual

Tommie C. Martin
(Name)

1400 E. Ash Street
(Street Number or RFD)

Chairman
(Title)

Globe, Arizona 85501
(City) (State) (ZIP Code)

**COMPLETE ONLY IF CONTRACTOR IS A CORPORATION**

I, _____, CERTIFY That I am the _____ of the corporation named as contractor herein; that _____, who signed this release on behalf of the corporation, was then _____ of said corporation; and that said release was duly signed for and on behalf of said corporation by authority of its governing body.

[SEAL]

_____
(Signature)

DI-137
(Rev. 8/96)

Attest:

_____

Marian Sheppard, Chief Deputy Clerk

Approved as to form:

_____

Bryan B. Chambers,
Chief Deputy County Attorney

Amendment No. 0009

to

Contract No. CMK0L090002

between

Bureau of Indian Affairs

and

Gila County on behalf of the

Gila County Juvenile Detention Center

# AMENDMENT OF SOLICITATION/MODIFICATION OF CONTRACT

1. CONTRACT ID CODE



| 2. AMENDMENT/MODIFICATION NO. | 3. EFFECTIVE DATE | 4. REQUISITION/PURCHASE REQ. NO. | 5. PROJECT NO. *(If applicable)* |
|---|---|---|---|
| 0009 | 03/31/2011 | | |

6. ISSUED BY CODE 00007
BIA-Albuquerque Acquisition Office
1001 Indian School Road NW, Room 347
Albuquerque, NM 87104

7. ADMINISTERED BY *(If other than Item 6)* CODE KH0230
BIA - OCFO-Western
Division of Acquisition,2600 N. Central Avenue, Suite 450
Phoenix, AZ 85004

8. NAME AND ADDRESS OF CONTRACTOR *(No., street, county, State and Zip Code)*

GILA, COUNTY OF
1400 E ASH ST
GLOBE, AZ 85501-1093

CODE * FACILITY CODE

| | |
|---|---|
| | 9A. AMENDMENT OF SOLICITATION NO. |
| | 9B. DATED *(SEE ITEM 11)* |
| (X) | 10A. MODIFICATION OF CONTRACT/ORDER NO. CMK0L090002 |
| (X) | 10B. DATED *(SEE ITEM 13)* 12/08/2008 |

11. THIS ITEM ONLY APPLIES TO AMENDMENTS OF SOLICITATIONS

☐ The above numbered solicitation is amended as set forth in Item 14. The hour and date specified for receipt of Offers ☐ is extended, ☐ is not extended.

Offers must acknowledge receipt of this amendment prior to the hour and date specified in the solicitation or as amended, by one of the following methods:

(a) By completing Items 8 and 15, and returning _____ copies of the amendment; (b) By acknowledging receipt of this amendment on each copy of the offer submitted; or (c) By separate letter or telegram which includes a reference to the solicitation and amendment numbers. FAILURE OF YOUR ACKNOWLEDGMENT TO BE RECEIVED AT THE PLACE DESIGNATED FOR THE RECEIPT OF OFFERS PRIOR TO THE HOUR AND DATE SPECIFIED MAY RESULT IN REJECTION OF YOUR OFFER. If by virtue of this amendment you desire to change an offer already submitted, such change may be made by telegram or letter, provided each telegram or letter makes reference to the solicitation and this amendment, and is received prior to the opening hour and date specified.

12. ACCOUNTING AND APPROPRIATION DATA *(If required)*

See Line Item Detail

13. THIS ITEM ONLY APPLIES TO MODIFICATION OF CONTRACTS/ORDERS.
IT MODIFIES THE CONTRACT/ORDER NO. AS DESCRIBED IN ITEM 14.

| CHECK ONE | |
|---|---|
| ☐ | A. THIS CHANGE ORDER IS ISSUED PURSUANT TO: (Specify authority) THE CHANGES SET FORTH IN ITEM 14 ARE MADE IN THE CONTRACT ORDER NO. IN ITEM 10A. |
| ☑ | B. THE ABOVE NUMBERED CONTRACT/ORDER IS MODIFIED TO REFLECT THE ADMINISTRATIVE CHANGES (such as changes in paying office, appropriation date, etc.) SET FORTH IN ITEM 14, PURSUANT TO THE AUTHORITY OF FAR 43.103(b). |
| ☐ | C. THIS SUPPLEMENTAL AGREEMENT IS ENTERED INTO PURSUANT TO AUTHORITY OF: |
| ☐ | D. OTHER *(Specify type of modification and authority)* |

E. IMPORTANT: Contractor [X] is not, [ ] is required to sign this document and return 1 copies to the issuing office.

14. DESCRIPTION OF AMENDMENT/MODIFICATION *(Organized by UCF section headings, including solicitation/contract subject matter where feasible.)*

A. INCREASE the total contract amount by $215.00 for payment purpose.

Except as provided herein, all terms and conditions of the document referenced in Item 9A or 10A, as heretofore changed, remains unchanged and in full force and effect.

| 15A. NAME AND TITLE OF SIGNER *(Type or print)* | | 16A. NAME AND TITLE OF CONTRACTING OFFICER *(Type or print)* | |
|---|---|---|---|
| Tommie C. Martin, Chairman | | Gerald Knox, 1420-0660-1012 | |
| 15B. CONTRACTOR/OFFEROR | 15C. DATE SIGNED | 16B. United States of America | 16C. DATE SIGNED |
| *(Signature of person authorized to sign)* | | BY Gerald Knox *(Signature of Contracting Officer)* | 06/15/2011 |

**Total Funding:** $512,460.00

| FYs | Fund | Budget Org | Sub | Object Class | Sub | Program | Cost Org | Sub | Proj/Job No. | Sub | Reporting Category |
|---|---|---|---|---|---|---|---|---|---|---|---|
| See Line Item(s) | | | | | | | | | | | |

**Division** **Closed FYs** **Cancelled Fund**

| Line Item Number | Description | Delivery Date (Start date to End date) | Quantity | Unit of Issue | Unit Price | Total Cost |
|---|---|---|---|---|---|---|
| | *The Contractor will assist BIA-OJS by providing detention correctional housing for Juvenile prisoners who have been arrested and are awaiting transport, awaiting adjudication, serving sentences, awaiting release, or are convicted of tribal violations occurring in Indian Country within the Agency's jurisdiction.* | | | | | |
| 0001 | Contracted bed space for juveniles @ $131.40 per day per juvenile for TCA, CRIT, & PYT<br>Change in Funding, Unit Price | 03/31/2011<br>(10/01/2008 to 03/31/2011) | 0.00 | YR | $215.00 | $215.00 |

Funding Information:
2011 - 2012 - - K0L400 - - 258A - - J3130 - - - - - - - -
- -
215.00

**Previous Total:** $512,245.00
**Modification Total:** $215.00
**Grand Total:** $512,460.00
(Includes Discounts)

*This is a Cost Reimbursement Type Contract. The contract amount may increase or decrease during the term of the contract to pay for actual costs for services provided to the BIA, OJS*

## Shipping Addresses

| Code | Detail | |
|---|---|---|
| 0001 | **Org:** | BIA - Office of Justice Services |
| | **Addr:** | 400 N. 5th Street 10th Floor |
| | | Phoenix AZ 85004 |
| | **Attn:** | Vincente Anchondo, Supv. Correctional Prog. Spec. |
| | **Phone:** | (602) 379-6958 ext. |
| | **Fax:** | (602) 379-6462 ext. |

## Invoice Addresses

| Code | Detail | |
|---|---|---|
| *0001* | **Org:** | BIA-Albuquerque Accounting Operations |
| | **Addr:** | 1001 Indian School Road NW, Suite 352 |
| | | Albuquerque NM 87104 |
| | **Attn:** | Cecilia Clark, Financial Manager |
| | **Phone:** | (505) 563-3151 ext. |
| | **Fax:** | (505) 563-3038 ext. |

Attest:

_____
Marian Sheppard, Chief Deputy Clerk

Approved as to form:

_____
Bryan B. Chambers,
Chief Deputy County Attorney

# AMENDMENT OF SOLICITATION/MODIFICATION OF CONTRACT

CONTRACT ID CODE



| 2. AMENDMENT/MODIFICATION NO. | 3. EFFECTIVE DATE | 4. REQUISITION/PURCHASE REQ. NO. | 5. PROJECT NO. *(If applicable)* |
|---|---|---|---|
| 0007 | 09/30/2010 | | |

**6. ISSUED BY** CODE 00007
BIA-Albuquerque Acquisition Office
1001 Indian School Road NW, Room 347
Albuquerque, NM 87104

**7. ADMINISTERED BY** *(If other than Item 6)* CODE KH0230
BIA - OCFO-Western
Division of Acquisition,2600 N. Central Avenue, Suite 450
Phoenix, AZ 85004

**8. NAME AND ADDRESS OF CONTRACTOR** *(No., street, county, State and Zip Code)*

GILA, COUNTY OF
1400 E ASH ST
GLOBE, AZ 85501-1093

CODE * FACILITY CODE

| | |
|---|---|
| | 9A. AMENDMENT OF SOLICITATION NO. |
| | 9B. DATED *(SEE ITEM 11)* |
| (X) | 10A. MODIFICATION OF CONTRACT/ORDER NO. CMK0L090002 |
| (X) | 10B. DATED *(SEE ITEM 13)* 12/08/2008 |

**11. THIS ITEM ONLY APPLIES TO AMENDMENTS OF SOLICITATIONS**

☐ The above numbered solicitation is amended as set forth in Item 14. The hour and date specified for receipt of Offers ☐ is extended, ☐ is not extended.

Offers must acknowledge receipt of this amendment prior to the hour and date specified in the solicitation or as amended, by one of the following methods:

(a) By completing Items 8 and 15, and returning _____ copies of the amendment; (b) By acknowledging receipt of this amendment on each copy of the offer submitted; or (c) By separate letter or telegram which includes a reference to the solicitation and amendment numbers. FAILURE OF YOUR ACKNOWLEDGMENT TO BE RECEIVED AT THE PLACE DESIGNATED FOR THE RECEIPT OF OFFERS PRIOR TO THE HOUR AND DATE SPECIFIED MAY RESULT IN REJECTION OF YOUR OFFER. If by virtue of this amendment you desire to change an offer already submitted, such change may be made by telegram or letter, provided each telegram or letter makes reference to the solicitation and this amendment, and is received prior to the opening hour and date specified.

**12. ACCOUNTING AND APPROPRIATION DATA** *(If required)*

See Line Item Detail

**13. THIS ITEM ONLY APPLIES TO MODIFICATION OF CONTRACTS/ORDERS. IT MODIFIES THE CONTRACT/ORDER NO. AS DESCRIBED IN ITEM 14.**

| CHECK ONE | |
|---|---|
| ☐ | A. THIS CHANGE ORDER IS ISSUED PURSUANT TO: (Specify authority) THE CHANGES SET FORTH IN ITEM 14 ARE MADE IN THE CONTRACT ORDER NO. IN ITEM 10A. |
| ☐ | B. THE ABOVE NUMBERED CONTRACT/ORDER IS MODIFIED TO REFLECT THE ADMINISTRATIVE CHANGES (such as changes in paying office, appropriation date, etc.) SET FORTH IN ITEM 14, PURSUANT TO THE AUTHORITY OF FAR 43.103(b). |
| ☑ | C. THIS SUPPLEMENTAL AGREEMENT IS ENTERED INTO PURSUANT TO AUTHORITY OF: FAR 52.243-2 Changes Clause |
| ☐ | D. OTHER *(Specify type of modification and authority)* |

E. IMPORTANT: Contractor ☐ is not, [X] is required to sign this document and return 2 copies to the issuing office.

**14. DESCRIPTION OF AMENDMENT/MODIFICATION** *(Organized by UCF section headings, including solicitation/contract subject matter where feasible.)*

A. EXTEND the period of performance from September 30, 2010 to December 31, 2010.

B. INCORPORATE additional funding of $142, 000.00 from $370, 245.00 to $512,245.00 for payment coverage of continuing detention services.

Except as provided herein, all terms and conditions of the document referenced in Item 9A or 10A, as heretofore changed, remains unchanged and in full force and effect.

| 15A. NAME AND TITLE OF SIGNER *(Type or print)* | | 16A. NAME AND TITLE OF CONTRACTING OFFICER *(Type or print)* | |
|---|---|---|---|
| Michael A. Pastor, Chairman | | Gerald Knox, 1420-0660-1012 | |
| 15B. CONTRACTOR/OFFEROR | 15C. DATE SIGNED | 16B. United States of America | 16C. DATE SIGNED |
| *(Signature of person authorized to sign)* | | BY Gerald Knox *(Signature of Contracting Officer)* | 10/28/2010 |

NSN 7540-01-152-8070
PREVIOUS EDITION UNUSABLE

Approved as to form: _____, Bryan Chambers, Chief Deputy County Attorney

STANDARD FORM 30 (REV. 10-83)
Prescribed by GSA FAR (48 CFR) 53.243

**Total Funding:** $512,245.00

| FYs | Fund | Budget Org | Sub | Object Class | Sub | Program | Cost Org | Sub | Proj/Job No. | Sub | Reporting Category |
|---|---|---|---|---|---|---|---|---|---|---|---|
| See Line Item(s) | | | | | | | | | | | |

**Division** **Closed FYs** **Cancelled Fund**

| Line Item Number | Description | Delivery Date (Start date to End date) | Quantity | Unit of Issue | Unit Price | Total Cost |
|---|---|---|---|---|---|---|
| | *The Contractor will assist BIA-OJS by providing detention correctional housing for Juvenile prisoners who have been arrested and are awaiting transport, awaiting adjudication, serving sentences, awaiting release, or are convicted of tribal violations occurring in Indian Country within the Agency's jurisdiction.* | | | | | |
| 0001 | Contracted bed space for juveniles @ $131.40 per day per juvenile for TCA, CRIT, & PYT<br>Change in Funding, Unit Price | 09/30/2010<br>(10/01/2008 to 09/30/2010) | 0.00 | YR | $142,000.00 | $142,000.00 |

Funding Information:
2010 - 2011 - - K0I400 - - 258A - - J3130 - - - - - - - - -
142,000.00

**Previous Total:** $370,245.00
**Modification Total:** $142,000.00
**Grand Total:** $512,245.00
(Includes Discounts)

*This is a Cost Reimbursement Type Contract. The contract amount may increase or decrease during the term of the contract to pay for actual costs for services provided to the BIA, OJS*

## Shipping Addresses

| Code | Detail | |
|---|---|---|
| 0001 | Org: | BIA - Office of Justice Services |
| | Addr: | 400 N. 5th Street 10th Floor |
| | | Phoenix AZ 85004 |
| | Attn: | Vincente Anchondo, Supv. Correctional Prog. Spec. |
| | Phone: | (602) 379-6958 ext. |
| | Fax: | (602) 379-6462 ext. |

| Code | Detail | |
|---|---|---|
| 0001 | Org: | BIA-Albuquerque Accounting Operations |
| | Addr: | 1001 Indian School Road NW, Suite 352 |
| | | Albuquerque NM 87104 |
| | Attn: | Cecilia Clark, Financial Manager |
| | Phone: | (505) 563-3151 ext. |
| | Fax: | (505) 563-3038 ext. |

# AMENDMENT OF SOLICITATION/MODIFICATION OF CONTRACT

1. CONTRACT ID CODE



| 2. AMENDMENT/MODIFICATION NO. | 3. EFFECTIVE DATE | 4. REQUISITION/PURCHASE REQ. NO. | 5. PROJECT NO. *(If applicable)* |
|---|---|---|---|
| 0006 | 05/07/2010 | | |

6. ISSUED BY CODE 00007
BIA-Albuquerque Acquisition Office
1001 Indian School Road NW, Room 347
Albuquerque, NM 87104

7. ADMINISTERED BY *(If other than Item 6)* CODE KH0230
BIA - OCFO-Western
Division of Acquisition,2600 N. Central Avenue, Suite 450
Phoenix, AZ 85004

8. NAME AND ADDRESS OF CONTRACTOR *(No., street, county, State and Zip Code)*

GILA, COUNTY OF
1400 E ASH ST
GLOBE, AZ 85501-1093

CODE * FACILITY CODE

| | |
|---|---|
| | 9A. AMENDMENT OF SOLICITATION NO. |
| | 9B. DATED *(SEE ITEM 11)* |
| (X) | 10A. MODIFICATION OF CONTRACT/ORDER NO. CMK0L090002 |
| (X) | 10B. DATED *(SEE ITEM 13)* 12/08/2008 |

11. THIS ITEM ONLY APPLIES TO AMENDMENTS OF SOLICITATIONS

☐ The above numbered solicitation is amended as set forth in Item 14. The hour and date specified for receipt of Offers ☐ is extended, ☐ is not extended.

Offers must acknowledge receipt of this amendment prior to the hour and date specified in the solicitation or as amended, by one of the following methods:

(a) By completing Items 8 and 15, and returning _____ copies of the amendment; (b) By acknowledging receipt of this amendment on each copy of the offer submitted; or (c) By separate letter or telegram which includes a reference to the solicitation and amendment numbers. FAILURE OF YOUR ACKNOWLEDGMENT TO BE RECEIVED AT THE PLACE DESIGNATED FOR THE RECEIPT OF OFFERS PRIOR TO THE HOUR AND DATE SPECIFIED MAY RESULT IN REJECTION OF YOUR OFFER. If by virtue of this amendment you desire to change an offer already submitted, such change may be made by telegram or letter, provided each telegram or letter makes reference to the solicitation and this amendment, and is received prior to the opening hour and date specified

12. ACCOUNTING AND APPROPRIATION DATA *(If required)*
See Line Item Detail

13. THIS ITEM ONLY APPLIES TO MODIFICATION OF CONTRACTS/ORDERS.
IT MODIFIES THE CONTRACT/ORDER NO. AS DESCRIBED IN ITEM 14.

| CHECK ONE | |
|---|---|
| | A. THIS CHANGE ORDER IS ISSUED PURSUANT TO: (Specify authority) THE CHANGES SET FORTH IN ITEM 14 ARE MADE IN THE CONTRACT ORDER NO. IN ITEM 10A. |
| | B. THE ABOVE NUMBERED CONTRACT/ORDER IS MODIFIED TO REFLECT THE ADMINISTRATIVE CHANGES (such as changes in paying office, appropriation date, etc.) SET FORTH IN ITEM 14, PURSUANT TO THE AUTHORITY OF FAR 43.103(b). |
| ✓ | C. THIS SUPPLEMENTAL AGREEMENT IS ENTERED INTO PURSUANT TO AUTHORITY OF: FAR 52.243-2 Changes Clause |
| | D. OTHER *(Specify type of modification and authority)* |

E. IMPORTANT: Contractor ☐ is not, [X] is required to sign this document and return 2 copies to the issuing office.

14. DESCRIPTION OF AMENDMENT/MODIFICATION *(Organized by UCF section headings, including solicitation/contract subject matter where feasible.)*

A. INCORPORATE additional funding of 175,000.00 due to an increase in inmate population, which increases the total contract amount from $195,245.00 to $370,245.00.

Except as provided herein, all terms and conditions of the document referenced in Item 9A or 10A, as heretofore changed, remains unchanged and in full force and effect.

| 15A. NAME AND TITLE OF SIGNER *(Type or print)* | | 16A. NAME AND TITLE OF CONTRACTING OFFICER *(Type or print)* | |
|---|---|---|---|
| Michael A. Pastor, Chairman | | Gerald Knox, 1420-0660-1110 | |
| 15B. CONTRACTOR/OFFEROR *(Signature of person authorized to sign)* | 15C. DATE SIGNED 6/8/10 | 16B. United States of America BY *(Signature of Contracting Officer)* | 16C. DATE SIGNED 05/12/2010 |

NSN 7540-01-152-8070
PREVIOUS EDITION UNUSABLE

Approved as to form: Bryan Chambers, Chief Deputy County Attorney

STANDARD FORM 30 (REV. 10-83)
Prescribed by GSA FAR (48 CFR) 53.243

**Total Funding:** $370,245.00

| FYs | Fund | Budget Org | Sub | Object Class | Sub | Program | Cost Org | Sub | Proj/Job No. | Sub | Reporting Category |
|---|---|---|---|---|---|---|---|---|---|---|---|
| See Line Item(s) | | | | | | | | | | | |

**Division** **Closed FYs** **Cancelled Fund**

| Line Item Number | Description | Delivery Date (Start date to End date) | Quantity | Unit of Issue | Unit Price | Total Cost |
|---|---|---|---|---|---|---|
| | *The Contractor will assist BIA-OJS by providing detention correctional housing for Juvenile prisoners who have been arrested and are awaiting transport, awaiting adjudication, serving sentences, awaiting release, or are convicted of tribal violations occurring in Indian Country within the Agency's jurisdiction.* | | | | | |
| 0001 | Contracted bed space for juveniles @ $131.40 per day per juvenile for TCA, CRIT, & PYT<br>Change in Funding, Unit Price | 09/30/2010<br>(10/01/2008 to 09/30/2010) | 0.00 | YR | $175,000.00 | $175,000.00 |

Funding Information:
2010 - 2011 - - K0I400 - - 258A - - J3130 - - - - - - - -
- -
175,000.00

**Previous Total:** $195,245.00
**Modification Total:** $175,000.00
**Grand Total:** $370,245.00
(Includes Discounts)

*This is a Cost Reimbursement Type Contract. The contract amount may increase or decrease during the term of the contract to pay for actual costs for services provided to the BIA, OJS*

## Shipping Addresses

| Code | Detail | |
|---|---|---|
| 0001 | **Org:** | BIA - Office of Justice Services |
| | ***Addr:*** | *400 N. 5th Street 10th Floor* |
| | | Phoenix AZ 85004 |
| | **Attn:** | Vincente Anchondo, Supv. Correctional Prog. Spec. |
| | **Phone:** | (602) 379-6958 ext. |
| | **Fax:** | (602) 379-6462 ext. |

## *Invoice Addresses*

| Code | Detail | |
|---|---|---|
| 0001 | **Org:** | BIA-Albuquerque Accounting Operations |
| | **Addr:** | 1001 Indian School Road NW, Suite 352 |
| | | Albuquerque NM 87104 |
| | **Attn:** | Cecilia Clark, Financial Manager |
| | **Phone:** | (505) 563-3151 ext. |
| | **Fax:** | (505) 563-3038 ext. |

# AMENDMENT OF SOLICITATION/MO ICATION OF CONTRACT

. CONTRACT ID CODE



| 2. AMENDMENT/MODIFICATION NO. | 3. EFFECTIVE DATE | 4. REQUISITION/PURCHASE REQ. NO. | 5. PROJECT NO. *(If applicable)* |
|---|---|---|---|
| 0004 | 11/21/2009 | | |

**6. ISSUED BY** CODE 00007
BIA-Albuquerque Acquisition Office
1001 Indian School Road NW, Room 347
Albuquerque, NM 87104

**7. ADMINISTERED BY** *(If other than Item 6)* CODE 00007
BIA-Albuquerque Acquisition Office
1001 Indian School Road NW, Room 347
Albuquerque, NM 87104

**8. NAME AND ADDRESS OF CONTRACTOR** *(No., street, county, State and Zip Code)*

GILA, COUNTY OF
1400 E ASH ST
GLOBE, AZ 85501-1093

CODE * FACILITY CODE

| | |
|---|---|
| | 9A. AMENDMENT OF SOLICITATION NO. |
| | 9B. DATED *(SEE ITEM 11)* |
| (X) | 10A. MODIFICATION OF CONTRACT/ORDER NO. CMK0L090002 |
| (X) | 10B. DATED *(SEE ITEM 13)* 12/08/2008 |

**11. THIS ITEM ONLY APPLIES TO AMENDMENTS OF SOLICITATIONS**

☐ The above numbered solicitation is amended as set forth in Item 14. The hour and date specified for receipt of Offers ☐ is extended, ☐ is not extended.

Offers must acknowledge receipt of this amendment prior to the hour and date specified in the solicitation or as amended, by one of the following methods:

(a) By completing Items 8 and 15, and returning _____ copies of the amendment; (b) By acknowledging receipt of this amendment on each copy of the offer submitted; or (c) By separate letter or telegram which includes a reference to the solicitation and amendment numbers. FAILURE OF YOUR ACKNOWLEDGMENT TO BE RECEIVED AT THE PLACE DESIGNATED FOR THE RECEIPT OF OFFERS PRIOR TO THE HOUR AND DATE SPECIFIED MAY RESULT IN REJECTION OF YOUR OFFER. If by virtue of this amendment you desire to change an offer already submitted, such change may be made by telegram or letter, provided each telegram or letter makes reference to the solicitation and this amendment, and is received prior to the opening hour and date specified.

**12. ACCOUNTING AND APPROPRIATION DATA** *(If required)*

See Line Item Detail

**13. THIS ITEM ONLY APPLIES TO MODIFICATION OF CONTRACTS/ORDERS. IT MODIFIES THE CONTRACT/ORDER NO. AS DESCRIBED IN ITEM 14.**

| CHECK ONE | |
|---|---|
| ☐ | A. THIS CHANGE ORDER IS ISSUED PURSUANT TO: (Specify authority) THE CHANGES SET FORTH IN ITEM 14 ARE MADE IN THE CONTRACT ORDER NO. IN ITEM 10A. |
| ☐ | B. THE ABOVE NUMBERED CONTRACT/ORDER IS MODIFIED TO REFLECT THE ADMINISTRATIVE CHANGES (such as changes in paying office, appropriation date, etc.) SET FORTH IN ITEM 14, PURSUANT TO THE AUTHORITY OF FAR 43.103(b). |
| ☑ | C. THIS SUPPLEMENTAL AGREEMENT IS ENTERED INTO PURSUANT TO AUTHORITY OF: FAR 52.243-2 Changes Clause |
| ☐ | D. OTHER *(Specify type of modification and authority)* |

E. IMPORTANT: Contractor ☐ is not, [X] is required to sign this document and return 2 copies to the issuing office.

**14. DESCRIPTION OF AMENDMENT/MODIFICATION** *(Organized by UCF section headings, including solicitation/contract subject matter where feasible.)*

The purpose of this modification is to increase the amount of the contract funds. Accordingly, (1) The amount of the contract funds is hereby increased by $123,000.00 from $72,245.00 to $195,245.00. The contract performance period is extended from of January 1, 2010 through September 30, 2010. (2) Any unused funds previously obligated in this contract for medical costs can be used to cover costs for bed space. (3) Item 25. of SF-33 Payment will be made by: BIA - Albuquerque Accounting Operations, 1001 Indian School Road NW, Ste 352, Albuquerque, New Mexico 87104.

All other terms and conditions remain in effect.

Except as provided herein, all terms and conditions of the document referenced in Item 9A or 10A, as heretofore changed, remains unchanged and in full force and effect.

| 15A. NAME AND TITLE OF SIGNER *(Type or print)* | | 16A. NAME AND TITLE OF CONTRACTING OFFICER *(Type or print)* | |
|---|---|---|---|
| Shirley L. Dawson, Chairwoman | | Stella Bellanger 1420-0776-0411 | |
| 15B. CONTRACTOR/OFFEROR | 15C. DATE SIGNED | 16B. United States of America | 16C. DATE SIGNED |
| Shirley L. Dawson *(Signature of person authorized to sign)* | 1/5/10 | BY Stella Bellanger *(Signature of Contracting Officer)* | 11/21/2009 |

NSN 7540-01-152-8070
PREVIOUS EDITION UNUSABLE

Approved as to form: _____, Bryan Chambers, Chief Deputy County Attorney

STANDARD FORM 30 (REV. 10-83)
Prescribed by GSA FAR (48 CFR) 53.243

**Total Funding:** $195,245.00

| FYs | Fund | Budget Org | Sub | Object Class | Sub | Program | Cost Org | Sub | Proj/Job No. | Sub | Reporting Category |
|---|---|---|---|---|---|---|---|---|---|---|---|
| See Line Item(s) | | | | | | | | | | | |

**Division** **Closed FYs** **Cancelled Fund**

| Line Item Number | Description | Delivery Date (Start date to End date) | Quantity | Unit of Issue | Unit Price | Total Cost |
|---|---|---|---|---|---|---|
| *The Contractor will assist BIA-OJS by providing detention correctional housing for Juvenile prisoners who have been arrested and are awaiting transport, awaiting adjudication, serving sentences, awaiting release, or are convicted of tribal violations occurring in Indian Country within the Agency's jurisdiction.* | | | | | | |
| 0001 | Contracted bed space for juveniles @ $131.40 per day per juvenile for TCA, CRIT, & PYT<br>Change in Funding, Unit Price | 09/30/2010<br>(10/01/2008 to 09/30/2010) | 0.00 | YR | $123,000.00 | $123,000.00 |

Funding Information:
2010 - 2011 - - K0I400 - - 258A - - J3130 - - - - - - - - -
123,000.00

**Previous Total:** $72,245.00
**Modification Total:** $123,000.00
**Grand Total:** $195,245.00
(Includes Discounts)

*This is a Cost Reimbursement Type Contract. The contract amount may increase or decrease during the term of the contract to pay for actual costs for services provided to the BIA, OJS*

## Shipping Addresses

| Code | Detail | |
|---|---|---|
| 0001 | Org: | BIA - Office of Justice Services |
| | Addr: | 400 N. 5th Street 10th Floor |
| | | Phoenix AZ 85004 |
| | Attn: | Vincente Anchondo, Supv. Correctional Prog. Spec. |
| | Phone: | (602) 379-6958 ext. |
| | Fax: | (602) 379-6462 ext. |

## Invoice Addresses

| Code | Detail | |
|---|---|---|
| 0001 | Org: | BIA-Albuquerque Accounting Operations |
| | Addr: | 1001 Indian School Road NW, Suite 352 |
| | | Albuquerque NM 87104 |
| | Attn: | Cecilia Clark, Financial Manager |
| | Phone: | (505) 563-3151 ext. |
| | Fax: | (505) 563-3038 ext. |

# AMENDMENT OF SOLICITATION/MODIFICATION OF CONTRACT

CONTRACT ID CODE



| 2. AMENDMENT/MODIFICATION NO. | 3. EFFECTIVE DATE | 4. REQUISITION/PURCHASE REQ. NO. | 5. PROJECT NO. *(If applicable)* |
|---|---|---|---|
| 0003 | 11/15/2009 | | |

6. ISSUED BY CODE 00007
BIA-Albuquerque Acquisition Office
1001 Indian School Road NW, Room 347
Albuquerque, NM 87104

7. ADMINISTERED BY *(If other than Item 6)* CODE 00007
BIA-Albuquerque Acquisition Office
1001 Indian School Road NW, Room 347
Albuquerque, NM 87104

8. NAME AND ADDRESS OF CONTRACTOR *(No., street, county, State and Zip Code)*

GILA, COUNTY OF
1400 E ASH ST
GLOBE, AZ 85501-1093

CODE * FACILITY CODE

| | |
|---|---|
| | 9A. AMENDMENT OF SOLICITATION NO. |
| | 9B. DATED *(SEE ITEM 11)* |
| (X) | 10A. MODIFICATION OF CONTRACT/ORDER NO. CMK0L090002 |
| (X) | 10B. DATED *(SEE ITEM 13)* 12/08/2008 |

11. THIS ITEM ONLY APPLIES TO AMENDMENTS OF SOLICITATIONS

☐ The above numbered solicitation is amended as set forth in Item 14. The hour and date specified for receipt of Offers ☐ is extended, ☐ is not extended.

Offers must acknowledge receipt of this amendment prior to the hour and date specified in the solicitation or as amended, by one of the following methods:

(a) By completing Items 8 and 15, and returning _____ copies of the amendment; (b) By acknowledging receipt of this amendment on each copy of the offer submitted; or (c) By separate letter or telegram which includes a reference to the solicitation and amendment numbers. FAILURE OF YOUR ACKNOWLEDGMENT TO BE RECEIVED AT THE PLACE DESIGNATED FOR THE RECEIPT OF OFFERS PRIOR TO THE HOUR AND DATE SPECIFIED MAY RESULT IN REJECTION OF YOUR OFFER. If by virtue of this amendment you desire to change an offer already submitted, such change may be made by telegram or letter, provided each telegram or letter makes reference to the solicitation and this amendment, and is received prior to the opening hour and date specified.

12. ACCOUNTING AND APPROPRIATION DATA *(If required)*

See Line Item Detail

13. THIS ITEM ONLY APPLIES TO MODIFICATION OF CONTRACTS/ORDERS.
IT MODIFIES THE CONTRACT/ORDER NO. AS DESCRIBED IN ITEM 14.

| CHECK ONE | |
|---|---|
| ☐ | A. THIS CHANGE ORDER IS ISSUED PURSUANT TO: (Specify authority) THE CHANGES SET FORTH IN ITEM 14 ARE MADE IN THE CONTRACT ORDER NO. IN ITEM 10A. |
| ☐ | B. THE ABOVE NUMBERED CONTRACT/ORDER IS MODIFIED TO REFLECT THE ADMINISTRATIVE CHANGES (such as changes in paying office, appropriation date, etc.) SET FORTH IN ITEM 14, PURSUANT TO THE AUTHORITY OF FAR 43.103(b). |
| ☑ | C. THIS SUPPLEMENTAL AGREEMENT IS ENTERED INTO PURSUANT TO AUTHORITY OF: FAR 52.243-2 Changes Clause |
| ☐ | D. OTHER *(Specify type of modification and authority)* |

E. IMPORTANT: Contractor ☐ is not, [X] is required to sign this document and return 2 copies to the issuing office.

14. DESCRIPTION OF AMENDMENT/MODIFICATION *(Organized by UCF section headings, including solicitation/contract subject matter where feasible.)*

The purpose of this modification is to increase the amount of the contract funds. Accordingly, (1) The amount of the contract funds is hereby increased by $22,245.00 from $50,000.00 to $72,245.00. The contract performance period is extended from of January 1, 2010 through September 30, 2010. (2) Any unused funds previously obligated in this contract for medical costs can be used to cover costs for bed space. (3) Item 25, of SF-33 Payment will be made by: BIA - Albuquerque Accounting Operations, 1001 Indian School Road NW, Ste 352, Albuquerque, New Mexico 87104.

All other terms and conditions remain in effect.

Except as provided herein, all terms and conditions of the document referenced in Item 9A or 10A, as heretofore changed, remains unchanged and in full force and effect.

| 15A. NAME AND TITLE OF SIGNER *(Type or print)* | | 16A. NAME AND TITLE OF CONTRACTING OFFICER *(Type or print)* | |
|---|---|---|---|
| Shirley L. Dawson, Chairwoman | | Stella Bellanger 1420-0776-0411 | |
| 15B. CONTRACTOR/OFFEROR | 15C. DATE SIGNED | 16B. United States of America | 16C. DATE SIGNED |
| Shirley L. Dawson *(Signature of person authorized to sign)* | 12/15/09 | BY Stella Bellanger *(Signature of Contracting Officer)* | 11/15/2009 |

NSN 7540-01-152-8070
PREVIOUS EDITION UNUSABLE

Approved as to form: Bryan Chambers, Chief Deputy County Attorney

STANDARD FORM 30 (REV. 10-83)
Prescribed by GSA FAR (48 CFR) 53.243

**Total Funding:** $72,245.00

| FYs | Fund | Budget Org | Sub | Object Class | Sub | Program | Cost Org | Sub | Proj/Job No. | Sub | Reporting Category |
|---|---|---|---|---|---|---|---|---|---|---|---|
| See Line Item(s) | | | | | | | | | | | |

**Division** **Closed FYs** **Cancelled Fund**

| Line Item Number | Description | Delivery Date (Start date to End date) | Quantity | Unit of Issue | Unit Price | Total Cost |
|---|---|---|---|---|---|---|
| *The Contractor will assist BIA-OJS by providing detention correctional housing for Juvenile prisoners who have been arrested and are awaiting transport, awaiting adjudication, serving sentences, awaiting release, or are convicted of tribal violations occurring in Indian Country within the Agency's jurisdiction.* | | | | | | |
| 0001 | Contracted bed space for juveniles @ $131.40 per day per juvenile for TCA, CRIT, & PYT<br>Change in Delivery Date, Performance Period, Funding, Unit Price | 09/30/2010<br>(10/01/2008 to 09/30/2010) | 0.00 | YR | $22,245.00 | $22,245.00 |
| Funding Information:<br>2010 - 2011 - - K0I400 - - 258A - - J3130 - - - - - - - -<br>- -<br>22,245.00 | | | | | | |
| 0002 | Emergency Services<br>Change in Delivery Date, Performance Period<br>This includes emergencies such as needed medical and psychological treatment, prescriptions for inmates or emergencies such as detention center closures. This is included on a not-to-exceed basis. | 09/30/2010<br>(10/01/2008 to 09/30/2010) | 0.00 | YR | $0.00 | $0.00 |

**Previous Total:** $50,000.00
**Modification Total:** $22,245.00
**Grand Total:** $72,245.00
(Includes Discounts)

*This is a Cost Reimbursement Type Contract. The contract amount may increase or decrease during the term of the contract to pay for actual costs for services provided to the BIA, OJS*

## Shipping Addresses

| Code | Detail | |
|---|---|---|
| 0001 | Org: | BIA - Office of Justice Services |
| | Addr: | 400 N. 5th Street 10th Floor |
| | | Phoenix AZ 85004 |
| | Attn: | Vincente Anchondo, Supv. Correctional Prog. Spec. |
| | Phone: | (602) 379-6958 ext. |
| | Fax: | (602) 379-6462 ext. |

## Invoice Addresses

| Code | Detail | |
|---|---|---|
| 0001 | Org: | BIA-Albuquerque Accounting Operations |
| | Addr: | 1001 Indian School Road NW, Suite 352 |
| | | Albuquerque NM 87104 |
| | Attn: | Cecilia Clark, Financial Manager |
| | Phone: | (505) 563-3151 ext. |
| | Fax: | (505) 563-3038 ext. |

# AMENDMENT OF SOLICITATION/MOD...ICATION OF CONTRACT

1. CONTRACT ID CODE



| 2. AMENDMENT/MODIFICATION NO. | 3. EFFECTIVE DATE | 4. REQUISITION/PURCHASE REQ. NO. | 5. PROJECT NO. (If applicable) |
|---|---|---|---|
| 0001 | 03/22/2009 | | |

6. ISSUED BY CODE 00007
BIA-Albuquerque Acquisition Office
1001 Indian School Road NW, Room 347
Albuquerque, NM 87104

7. ADMINISTERED BY (If other than Item 6) CODE 00007
BIA-Albuquerque Acquisition Office
1001 Indian School Road NW, Room 347
Albuquerque, NM 87104

8. NAME AND ADDRESS OF CONTRACTOR (No., street, county, State and Zip Code)

GILA, COUNTY OF

1400 EAST ASH STREET,P.O. BOX 1093

GLOBE, AZ 85501-1093

CODE * FACILITY CODE

| | |
|---|---|
| | 9A. AMENDMENT OF SOLICITATION NO. |
| | 9B. DATED (SEE ITEM 11) |
| (X) | 10A. MODIFICATION OF CONTRACT/ORDER NO. CMK0L090002 |
| (X) | 10B. DATED (SEE ITEM 13) 12/08/2008 |

11. THIS ITEM ONLY APPLIES TO AMENDMENTS OF SOLICITATIONS

☐ The above numbered solicitation is amended as set forth in Item 14. The hour and date specified for receipt of Offers ☐ is extended, ☐ is not extended.

Offers must acknowledge receipt of this amendment prior to the hour and date specified in the solicitation or as amended, by one of the following methods:

(a) By completing Items 8 and 15, and returning _____ copies of the amendment; (b) By acknowledging receipt of this amendment on each copy of the offer submitted; or (c) By separate letter or telegram which includes a reference to the solicitation and amendment numbers. FAILURE OF YOUR ACKNOWLEDGMENT TO BE RECEIVED AT THE PLACE DESIGNATED FOR THE RECEIPT OF OFFERS PRIOR TO THE HOUR AND DATE SPECIFIED MAY RESULT IN REJECTION OF YOUR OFFER. If by virtue of this amendment you desire to change an offer already submitted, such change may be made by telegram or letter, provided each telegram or letter makes reference to the solicitation and this amendment, and is received prior to the opening hour and date specified.

12. ACCOUNTING AND APPROPRIATION DATA (If required)

2009 - 2010 - - K0L400 - - 258A - - J3130 - - - - - - - - - -

13. THIS ITEM ONLY APPLIES TO MODIFICATION OF CONTRACTS/ORDERS.
IT MODIFIES THE CONTRACT/ORDER NO. AS DESCRIBED IN ITEM 14.

| CHECK ONE | |
|---|---|
| ☐ | A. THIS CHANGE ORDER IS ISSUED PURSUANT TO: (Specify authority) THE CHANGES SET FORTH IN ITEM 14 ARE MADE IN THE CONTRACT ORDER NO. IN ITEM 10A. |
| ☐ | B. THE ABOVE NUMBERED CONTRACT/ORDER IS MODIFIED TO REFLECT THE ADMINISTRATIVE CHANGES (such as changes in paying office, appropriation date, etc.) SET FORTH IN ITEM 14, PURSUANT TO THE AUTHORITY OF FAR 43.103(b). |
| ☑ | C. THIS SUPPLEMENTAL AGREEMENT IS ENTERED INTO PURSUANT TO AUTHORITY OF: FAR 52.243-2 Changes Clause |
| ☐ | D. OTHER (Specify type of modification and authority) |

E. IMPORTANT: Contractor ☐ is not, [X] is required to sign this document and return _____ copies to the issuing office.

14. DESCRIPTION OF AMENDMENT/MODIFICATION (Organized by UCF section headings, including solicitation/contract subject matter where feasible.)

The purpose of this modification is to increase the amount of the contract funds. Accordingly, (1) The amount of the contract funds is hereby increased by $28,166.00 from $21,834.00 to $50,000.00 for the contract performance period of March 6, 2009 through September 30, 2009. (2) The daily bed rate remains at $131.40 per day per inmate. (3) Any unused funds previously obligated in this contract for medical costs can be used to cover costs for bed space. (4) Item 25, of SF-33 Payment will be made by: BIA - Albuquerque Accounting Operations, 1001 Indian School Road NW, Ste 352, Albuquerque, New Mexico 87104.

All other terms and conditions remain in effect.

Except as provided herein, all terms and conditions of the document referenced in Item 9A or 10A, as heretofore changed, remains unchanged and in full force and effect.

| 15A. NAME AND TITLE OF SIGNER (Type or print) | 16A. NAME AND TITLE OF CONTRACTING OFFICER (Type or print) |
|---|---|
| Shirley L. Dawson, Chairwoman | Stella Bellanger 1420-0776-0411 |

| 15B. CONTRACTOR/OFFEROR | 15C. DATE SIGNED | 16B. United States of America | 16C. DATE SIGNED |
|---|---|---|---|
| Shirley L. Dawson (Signature of person authorized to sign) | 12/15/09 | BY Stella Bellanger (Signature of Contracting Officer) | 04/07/2009 |

Approved as to form: Bryan Chambers, Chief Deputy County Attorney

**Total Funding:** $50,000.00

| FYs | Fund | Budget Org | Sub | Object Class | Sub | Program | Cost Org | Sub | Proj/Job No. | Sub | Reporting Category |
|---|---|---|---|---|---|---|---|---|---|---|---|

**Division** **Closed FYs** **Cancelled Fund**

| Line Item Number | Description | Delivery Date (Start date to End date) | Quantity | Unit of Issue | Unit Price | Total Cost |
|---|---|---|---|---|---|---|
| *The Contractor will assist BIA-OJS by providing detention correctional housing for Juvenile prisoners who have been arrested and are awaiting transport, awaiting adjudication, serving sentences, awaiting release, or are convicted of tribal violations occurring in Indian Country within the Agency's jurisdiction.* | | | | | | |
| 0001 | Contracted bed space for juveniles @ $131.40 per day per juvenile for TCA, CRIT, & PYT<br>Change in Funding, Unit Price | 09/30/2009<br>(10/01/2008 to 09/30/2009) | 0.00 | YR | $28,166.00 | $28,166.00 |

Funding Information:
2009 - 2010 - - K0L400 - - 258A - - J3130 - - - - - - - -
- -
28,166.00

**Previous Total:** $21,834.00
**Modification Total:** $28,166.00
**Grand Total:** $50,000.00
(Includes Discounts)

*This is a Cost Reimbursement Type Contract. The contract amount may increase or decrease during the term of the contract to pay for actual costs for services provided to the BIA, OJS*

## Shipping Addresses

| Code | Detail |
|---|---|
| 0001 | **Org:** BIA - Office of Justice Services<br>**Addr:** 400 N. 5th Street 10th Floor<br><br>Phoenix AZ 85004<br>**Attn:** Vincente Anchondo, Supv. Correctional Prog. Spec.<br>**Phone:** (602) 379-6958 ext.<br>**Fax:** (602) 379-6462 ext. |

## Invoice Addresses

| Code | Detail |
|---|---|
| 0001 | **Org:** BIA-Albuquerque Accounting Operations<br>**Addr:** 1001 Indian School Road NW, Suite 352<br><br>Albuquerque NM 87104<br>**Attn:** Cecilia Clark, Financial Manager<br>**Phone:** (505) 563-3151 ext.<br>**Fax:** (505) 563-3038 ext. |

# SOLICITATION, OFFER AND AWARD

1. THIS CONTRACT IS A RATED ORDER UNDER DPAS (15 CFR 700)

RATING



2. CONTRACT NUMBER: CMK0L090002

3. SOLICITATION NUMBER:

4. TYPE OF SOLICITATION: ☐ SEALED BID (IFB) ☐ NEGOTIATED (RFP)

5. DATE ISSUED:

6. REQUISITION/PURCHASE NUMBER:

7. ISSUED BY — CODE 00007

BIA-Albuquerque Acquisition Office
1001 Indian School Road NW, Room 347
Albuquerque,NM 87104

TEL: (505) 563-3007 ext. FAX: (505) 563-3030 ext.

8. ADDRESS OFFER TO *(If other than Item 7)*

NOTE: In sealed bid solicitations "offer" and "offeror" mean "bid" and "bidder".

## SOLICITATION

9. Sealed offers in original and _____ copies for furnishing the supplies or services in the Schedule will be received at the place specified in Item 8, or if handcarried, in the depository located in _____ until _____ (Hour) local time _____ (Date)

CAUTION - LATE submissions, Modifications, and Withdrawals: See Section L, Provision No. 52.214-7 or 52.215-1. All offers are subject to all terms and conditions contained in this solicitation.

| 10. FOR INFORMATION CALL: | A. NAME | B. TELEPHONE *(NO COLLECT CALLS)* | | | C. E-MAIL ADDRESS |
|---|---|---|---|---|---|
| | | AREA CODE | NUMBER | EXT. | |
| | | | - | | |

11. TABLE OF CONTENTS

| (X) | SEC. | DESCRIPTION | PAGE(S) | (X) | SEC. | DESCRIPTION | PAGE(S) |
|---|---|---|---|---|---|---|---|
| | | PART I - THE SCHEDULE | | | | PART II - CONTRACT CLAUSES | |
| X | A | SOLICITATION/CONTRACT FORM | 1 | X | I | CONTRACT CLAUSES | 7-13 |
| X | B | SUPPLIES OR SERVICES AND PRICES/COSTS | 2-3 | | | PART III - LIST OF DOCUMENTS, EXHIBITS AND OTHER ATTACH. | |
| | C | DESCRIPTION/SPECS./WORK STATEMENT | | X | J | LIST OF ATTACHMENTS | |
| X | D | PACKAGING AND MARKING | 3-4 | | | PART IV - REPRESENTATIONS AND INSTRUCTIONS | |
| | E | INSPECTION AND ACCEPTANCE | | | K | REPRESENTATIONS, CERTIFICATIONS, AND OTHER STATEMENTS OF OFFERORS | |
| | F | DELIVERIES OR PERFORMANCE | | | | | |
| | G | CONTRACT ADMINISTRATION DATA | | | L | INSTRS., CONDS., AND NOTICES TO OFFERORS | |
| | H | SPECIAL CONTRACT REQUIREMENTS | | | M | EVALUATION FACTORS FOR AWARD | |

## OFFER *(Must be fully completed by offeror)*

NOTE: Item 12 does not apply if the solicitation includes the provisions at 52.214-16, Minimum Bid Acceptance Period

12. In compliance with the above, the undersigned agrees, if this offer is accepted within 60 calendar days *(60 calendar days unless a different period is inserted by the offeror)* from the date for receipt of offers specified above, to furnish any or all items upon which prices are offered at the price set opposite each item, delivered at the designated point(s), within the time specified in the schedule.

| 13. DISCOUNT FOR PROMPT PAYMENT (See Section I, Clause No. 52-232-8) | 10 CALENDAR DAYS ( % ) | 20 CALENDAR DAYS ( % ) | 30 CALENDAR DAYS ( % ) | 30 CALENDAR DAYS ( % ) |
|---|---|---|---|---|
| | | | | 0.000 |

| 14. ACKNOWLEDGMENT OF AMENDMENTS *(the offeror acknowledges receipt of amendments to the SOLICITATION for offerors and related documents numbered and dated):* | AMENDMENT NO. | DATE | AMENDMENT NO. | DATE |
|---|---|---|---|---|
| | | | | |
| | | | | |

15A. NAME AND ADDRESS OF OFFEROR — CODE * FACILITY

GILA, COUNTY OF
1400 EAST ASH STREET,P.O. BOX 1093
GLOBE, AZ 85501-1093

16. NAME AND TITLE OF PERSON AUTHORIZED TO SIGN OFFER *(Type or print)*
Joseph Eylmo
Detention Admin, Gila County

15B. TELEPHONE NUMBER

| AREA CODE | NUMBER | EXT. |
|---|---|---|
| 928 | 425-6051 | |

☐ 15C. CHECK IF REMITTANCE ADDRESS IS DIFFERENT FROM ABOVE - ENTER SUCH ADDRESS IN SCHEDULE.

17. SIGNATURE

18. OFFER DATE

## AWARD *(To be completed by Government)*

19. ACCEPTED AS TO ITEMS NUMBERED

20. AMOUNT $21,834.00

21. ACCOUNTING AND APPROPRIATION
2009 - 2010 - - K0L400 - - 258A - - J3130 - - - - - - - - -

22. AUTHORITY FOR USING OTHER THAN FULL AND OPEN COMPETITION:
☒ 10 U.S.C. 2304 (c) ( 1 ) ☐ 41. U.S.C. 253(c) ( )

23. SUBMIT INVOICES TO ADDRESS SHOWN IN *(4 copies unless otherwise specified)* — ITEM 25

24. ADMINISTERED BY *(If other than Item 7)* — CODE 00007

BIA-Albuquerque Acquisition Office
1001 Indian School Road NW, Room 347
Albuquerque, NM 87104

25. PAYMENT WILL BE MADE BY — CODE ABQ

BIA-Albuquerque Accounting Operations
1001 Indian School Road NW, Suite 352
Albuquerque, NM 87104

26. NAME OF CONTRACTING OFFICER *(Type or print)*
Stella Bellanger 1420-3199-1208

27. UNITED STATES OF AMERICA *(Signature of Contracting Offider)*
Stella Bellanger

28. AWARD DATE 12/08/2008

IMPORTANT - Award will be made on this Form, or on Standard Form 26, or by other authorized official written notice.

**Total Funding:** $21,834.00

| FYs | | Fund | Budget Org | Sub | Object Class | Sub | Program | Cost Org | Sub | Proj/Job No. | Sub | Reporting Category |
|---|---|---|---|---|---|---|---|---|---|---|---|---|
| 2009 | 2010 | | K0L400 | | 258A | | J3130 | | | | | |

**Division** **Closed FYs** **Cancelled Fund**

| Line Item Number | Description | Delivery Date (Start Date to End Date) | Quantity | Unit of Issue | Unit Price | Total Cost (Includes Discounts) |
|---|---|---|---|---|---|---|
| | *The Contractor will assist BIA-OJS by providing detention correctional housing for Juvenile prisoners who have been arrested and are awaiting transport, awaiting adjudication, serving sentences, awaiting release, or are convicted of tribal violations occurring in Indian Country within the Agency's jurisdiction.* | | | | | |
| 0001 | Contracted bed space for juveniles @ $131.40 per day per juvenile for TCA, CRIT, & PYT | 09/30/2009 (10/01/2008 to 09/30/2009) | 1.00 | YR | $21,334.000 | $ 21,334.00 |
| | Funding Information: 2009 - 2010 - - K0L400 - - 258A - - J3130 - - - - - - - - - - $21,334.00 | | | | | |
| 0002 | Emergency Services | 09/30/2009 (10/01/2008 to 09/30/2009) | 1.00 | YR | $500.000 | $ 500.00 |
| | This includes emergencies such as needed medical and psychological treatment, prescriptions for inmates or emergencies such as detention center closures. This is included on a not-to-exceed basis. | | | | | |
| | Funding Information: 2009 - 2010 - - K0L400 - - 258A - - J3130 - - - - - - - - - - $500.00 | | | | | |

**Total Cost:** $21,834.00

*This is a Cost Reimbursement Type Contract. The contract amount may increase or decrease during the term of the contract to pay for actual costs for services provided to the BIA, OJS*

## Shipping Addresses

| Code | Detail | |
|---|---|---|
| 0001 | **Org:** | BIA - Office of Justice Services |
| | **Addr:** | 400 N. 5th Street 10th Floor |
| | | Phoenix AZ 85004 |
| | **Attn:** | Vincente Anchondo, Supv. Correctional Prog. Spec. |
| | **Phone:** | (602) 379-6958 ext. |
| | **Fax:** | (602) 379-6462 ext. |

## Invoice Addresses

| Code | Detail | |
|---|---|---|
| 0001 | **Org:** | BIA-Albuquerque Accounting Operations |
| | **Addr:** | 1001 Indian School Road NW, Suite 352 |
| | | Albuquerque NM 87104 |
| | **Attn:** | Cecilia Clark, Financial Manager |
| | **Phone:** | (505) 563-3151 ext. |
| | **Fax:** | (505) 563-3038 ext. |

TABLE OF CONTENTS

SECTION E -- Inspection and Acceptance 5
E.1 Inspection of Services--Cost-Reimbursement 5
SECTION F -- Deliveries or Performance 6
F.1 Stop-Work Order 6
SECTION I -- Contract Clauses 7
I.1 Clauses By Reference 7
I.2 Release of Claims--Department of the Interior 8
I.3 Indian Preference 8
I.4 Indian Preference Program 9
I.5 Payments 11
I.6 Availability Of Funds 11
I.7 Limitation Of Cost 11
52.217-9 Option to Extend the 12
SECTION L -- Instructions, Conditions and Notices to Bidders 13
L.1 Type of Contract 13

# SECTION E -- INSPECTION AND ACCEPTANCE

## E.1 52.246-05 INSPECTION OF SERVICES--COST-REIMBURSEMENT APRIL 1984

(a) Definition. "Services," as used in this clause, includes services performed, workmanship, and material furnished or used in performing services.

(b) The Contractor shall provide and maintain an inspection system acceptable to the Government covering the services under this contract. Complete records of all inspection work performed by the Contractor shall be maintained and made available to the Government during contract performance and for as long afterwards as the contract requires.

(c) The Government has the right to inspect and test all services called for by the contract, to the extent practicable at all places and times during the term of the contract. The Government shall perform inspections and tests in a manner that will not unduly delay the work.

(d) If any of the services performed do not conform with contract requirements, the Government may require the Contractor to perform the services again in conformity with contract requirements, for no additional fee. When the defects in services cannot be corrected by reperformance, the Government may--

(1) require the Contractor to take necessary action to ensure that future performance conforms to contract requirements; and
(2) reduce any fee payable under the contract to reflect the reduced value of the services performed.

(e) If the Contractor fails to promptly perform the services again or take the action necessary to ensure future performance in conformity with contract requirements, the Government may

(1) by contract or otherwise, perform the services and reduce any fee payable by an amount that is equitable under the circumstances; or
(2) terminate the contract for default.

# SECTION F -- DELIVERIES OR PERFORMANCE

## F.1 52.242-15 STOP-WORK ORDER AUGUST 1989

(a) The Contracting Officer may, at any time, by written order to the Contractor, require the Contractor to stop all, or any part, of the work called for by this contract for a period of 90 days after the order is delivered to the Contractor, and for any further period to which the parties may agree. The order shall be specifically identified as a stop-work order issued under this clause. Upon receipt of the order, the Contractor shall immediately comply with its terms and take all reasonable steps to minimize the incurrence of costs allocable to the work covered by the order during the period of work stoppage. Within a period of 90 days after a stop-work is delivered to the Contractor, or within any extension of that period to which the parties shall have agreed, the Contracting Officer shall either--

(1) Cancel the stop-work order; or

(2) Terminate the work covered by the order as provided in the Default, or the Termination for Convenience of the Government, clause of this contract.

(b) If a stop-work order issued under this clause is canceled or the period of the order or any extension thereof expires, the Contractor shall resume work. The Contracting Officer shall make an equitable adjustment in the delivery schedule or contract price, or both, and the contract shall be modified, in writing, accordingly, if--

(1) The stop-work order results in an increase in the time required for, or in the Contractor's cost properly allocable to, the performance of any part of this contract; and

(2) The Contractor asserts its right to the adjustment within 30 days after the end of the period of work stoppage; provided, that, if the Contracting Officer decides the facts justify the action, the Contracting Officer may receive and act upon the claim submitted at any time before final payment under this contract.

(c) If a stop-work order is not canceled and the work covered by the order is terminated for the convenience of the Government, the Contracting Officer shall allow reasonable costs resulting from the stop-work order in arriving at the termination settlement.

(d) If a stop-work order is not canceled and the work covered by the order is terminated for default, the Contracting Officer shall allow, by equitable adjustment or otherwise, reasonable costs resulting from the stop-work order.

# SECTION I -- CONTRACT CLAUSES

## I.1 52.252-02 CLAUSES INCORPORATED BY REFERENCE

This contract incorporates one or more clauses by reference, with the same force and effect as if they were given in full text. Upon request, the Contracting Officer will make their full text available. Also, the full text of a clause may be accessed electronically at this/these address(es):

http://www.acqnet.gov/far
http://www.doi.gov/pam

| Clause | Title | Date |
|---|---|---|
| 52.202-01 | Definitions | July 2004 |
| 52.203-03 | Gratuities | April 1984 |
| 52.203-05 | Covenant Against Contingent Fees | April 1984 |
| 52.203-06 | Restrictions on Subcontractor Sales to the Government | September 2006 |
| 52.203-07 | Anti-Kickback Procedures | July 1995 |
| 52.203-08 | Cancellation, Rescission, and Recovery of Funds for Illegal or Improper Activity | January 1997 |
| 52.203-10 | Price or Fee Adjustment for Illegal or Improper Activity | January 1997 |
| 52.203-12 | Limitation on Payments to Influence Certain Federal Transactions | September 2007 |
| 52.204-04 | Printed or Copied Double-Sided on Recycled Paper. | August 2000 |
| 52.204-07 | Central Contractor Registration | July 2006 |
| 52.207-03 | Right of First Refusal of Employment | May 2006 |
| 52.209-06 | Protecting the Government's Interest When Subcontracting with Contractors Debarred, Suspended, or Proposed for Debarment | September 2006 |
| 52.215-08 | Order of Precedence--Uniform Contract Format | October 1997 |
| 52.215-10 | Price Reduction for Defective Cost or Pricing Data | October 1997 |
| 52.215-11 | Price Reduction for Defective Cost or Pricing Data--Modifications | October 1997 |
| 52.215-14 | Integrity of Unit Prices | October 1997 |
| 52.216-07 | Allowable Cost and Payment | February 2002 |
| 52.216-11 Alt I | Cost Contract--No Fee (Apr 1984) - Alternate I | April 1984 |
| 52.216-23 | Execution and Commencement of Work | April 1984 |
| 52.217-09 | Option to Extend the Term of the Contract | March 2000 |
| 52.219-08 | Utilization of Small Business Concerns | May 2004 |
| 52.219-14 | Limitations On Subcontracting | December 1996 |
| 52.222-03 | Convict Labor | June 2003 |
| 52.222-20 | Walsh-Healy Public Contracts Act | December 1996 |
| 52.222-21 | Prohibition of Segregated Facilities | February 1999 |
| 52.222-26 | Equal Opportunity | March 2007 |
| 52.222-35 | Equal Opportunity for Special Disabled Veterans, Veterans of the Vietnam Era, and Other Eligible Veterans | September 2006 |
| 52.222-36 | Affirmative Action For Workers with Disabilities | June 1998 |
| 52.222-41 | Service Contract Act of 1965, As Amended | November 2007 |
| 52.223-06 | Drug-Free Workplace | May 2001 |
| 52.226-01 | Utilization of Indian Organizations and Indian-Owned Economic Enterprises | June 2000 |
| 52.228-07 | Insurance--Liability To Third Persons | March 1996 |
| 52.229-03 | Federal, State And Local Taxes | January 1991 |

| | | |
|---|---|---|
| 52.232-09 | Limitation on Withholding of Payments | April 1984 |
| 52.232-17 | Interest | June 1996 |
| 52.232-19 | Availability of Funds for the Next Fiscal Year | April 1984 |
| 52.232-23 | Assignment of Claims | January 1986 |
| 52.232-25 | Prompt Payment | February 2002 |
| 52.232-33 | Payment by Electronic Funds Transfer--Central Contractor Registration | May 1999 |
| 52.232-36 | Payment by Third Party | May 1999 |
| 52.233-01 | Disputes | July 2002 |
| 52.239-01 | Privacy or Security Safeguards | August 1996 |
| 52.242-01 | Notice of Intent to Disallow Costs | April 1984 |
| 52.242-13 | Bankruptcy | July 1995 |
| 52.243-02 Alt I | Changes--Cost-Reimbursement (Aug 1987) - Alternate I | April 1984 |
| 52.246-25 | Limitation of Liability--Services | February 1997 |
| 52.249-06 | Termination (Cost-Reimbursement) | May 2004 |
| 52.249-13 | Failure To Perform | June 2007 |
| 52.249-14 | Excusable Delays | April 1984 |

## I.2 1452.204-70 RELEASE OF CLAIMS--DEPARTMENT OF THE INTERIOR JULY 1996

After completion of work and prior to final payment, the Contractor shall furnish the Contracting Officer with a release of claims against the United States relating to this contract. The Release of Claims form (DI-137) shall be used for this purpose. The form provides for exception of specified claims from operation of the release.

## I.3 1452.226-70 INDIAN PREFERENCE APRIL 1984

(a) The Contractor agrees to give preferences to Indians who can perform the work required regardless of age (subject to existing laws and regulations), sex, religion, or tribal affiliation for training and employment opportunities under this contract and, to the extent feasible consistent with the efficient performance of this contract, training and employment preferences and opportunities shall be provided to Indians regardless of age (subject to existing laws and regulations), sex, religion, or tribal affiliation who are not fully qualified to perform under this contract. The Contractor also agrees to give preference to Indian organizations and Indian-owned economic enterprises in the awarding of any subcontracts consistent with the efficient performance of this contract. The Contractor shall maintain such records as are necessary to indicate compliance with this paragraph.

(b) In connection with the Indian employment preference requirements of this clause, the Contractor shall also provide opportunities for training incident to such employment. Such training shall include on-the-job, classroom, or apprenticeship training which is designed to increase the vocational effectiveness of an Indian employee.

(c) If the Contractor is unable to fill its training and employment needs after giving full consideration to Indians as required by this clause, those needs may be satisfied by selection of persons other than Indians in accordance with the clause of this contract entitled "Equal Opportunity."

(d) If no Indian organizations or Indian-owned economic enterprises are available for awarding of subcontracts in connection with the work performed under this contract, the Contractor agrees to comply with the provisions of this contract involving utilization of small business concerns, small business concerns owned and controlled by socially and economically disadvantaged individuals, or labor surplus area concerns.

(e) As used in this clause:

(1) "Indian" means a person who is a member of an Indian Tribe. If the Contractor has reason to doubt that a person seeking employment preference is an Indian, the contractor shall grant the preference but shall require the individual within thirty (30) days to provide evidence from the Tribe concerned that the person is a member of that Tribe.

(2) "Indian organization" means the governing body of any Indian Tribe or entity established or recognized by such governing body in accordance with the Indian Financing Act of 1974 (88 Stat. 77; 25 U.S.C. 1451); and

(3) "Indian-owned economic enterprise" means any Indian-owned commercial, industrial, or business activity established or organized for the purpose of profit provided that such Indian ownership shall constitute not less than 51 percent of the enterprise.

(4) "Indian Tribe" means an Indian Tribe, band, nation, or other organized group or community, including any Alaska Native village or regional or village corporation as defined in or established pursuant to the Alaska Native Claims Settlement Act (85 Stat. 668; 43 U.S.C. 1601) which is recognized as eligible for the special programs and services provided by the United States to Indians because of their status as Indians.

(f) The Contractor agrees to include the provisions of the clause including this paragraph (f) in each subcontract awarded under this contract.

(g) In the event of noncompliance with this clause, the Contractor's right to proceed may be terminated in whole or in part by the Contracting Officer and the work completed in a manner determined by the Contracting Officer to be in the best interests of the Government.
(End of clause)

I.4 1452.226-71 INDIAN PREFERENCE PROGRAM APRIL 1984

(a) In addition to the requirements of the clause of this contract entitled "Indian Preference -- Department of the Interior," the Contractor agrees to establish and conduct an Indian preference program which will expand the opportunities for Indian organizations and Indian-owned economic enterprises to receive a preference in the awarding of subcontracts and which will expand opportunities for Indians to receive preference for training and employment in connection with the work to be performed under this contract. In this connection, the Contractor shall --

(1) Designate a liaison officer who will:
i.maintain liaison with the Government and Tribe(s) on Indian preference matters; ii.supervise compliance with the provisions of this clause; and iii.administer the Contractor's Indian preference program.

(2) Advise its recruitment sources in writing and include a statement in all advertisements for employment that Indian applicants will be given preference in employment and training incident to such employment.

(3) Not less than twenty (20) calendar days prior to commencement of work under this contract, post a written notice in the Tribal office of any reservations on which or near where the work under this contract is to be performed, which sets forth the Contractor's employment needs and related training opportunities. The notice shall include the approximate number and types of employees needed, the approximate dates of employment; the experience or special skills required for employment, if any; training opportunities available; and all other pertinent information necessary to advise prospective employees of any other employment requirements. The Contractor shall also request the Tribe(s) on or near whose reservation(s) the work is to be performed to provide assistance to the Contractor in filling its employment needs and training opportunities. The Contracting Officer will advise the Contractor of the name, location, and phone number of the Tribal officials to contact in regard to the posting of notices and requests for Tribal assistance.

(4) Establish and conduct a subcontracting program which gives preference to Indian organizations and Indian-owned economic enterprises as subcontractors and suppliers under this contract. Consistent with the efficient performance of this contract, the Contractor shall give public notice of existing subcontracting opportunities by soliciting bids or proposals only from Indian organizations or Indian-owned economic enterprises. The Contractor shall request assistance and information on Indian firms qualified as suppliers or subcontractors from the Tribe(s) on or near whose reservation(s) the work under the contract is to be performed. The Contracting Officer will advise the Contractor of the name, location, and phone number of the Tribal officials to be contacted in regard to the request for assistance and information. Public notices and solicitations for existing subcontracting opportunities shall provide an equitable opportunity for Indian firms to submit bids or proposals by including --

i.a clear description of the supplies or services required including quantities, specifications, and delivery schedules which facilitate the participation of Indian firms; ii.a statement indicating the preference will be given to Indian organizations and Indian-owned economic enterprises in accordance with Section 7(b) of Public Law 93-638; (88 Stat. 2205; 25 U.S.C. 450e(b)); iii.definitions for the terms "Indian organization" and "Indian-owned economic enterprise" as prescribed under the "Indian Preference -- Department of the Interior" clause of this contract; iv.a representation to be completed by the bidder or offeror that it is an Indian organization or Indian-owned economic enterprise; and

(v) a closing date for receipt of bids or proposals which provides sufficient time for preparation and submission of a bid or proposal. If after soliciting bids from Indian organizations and Indian-owned economic enterprises, no responsible bid is received, the Contractor shall comply with the requirements of paragraph (d) of the "Indian Preference -- Department of the Interior" clause of this contract. If one or more responsible bids are received, award shall be made to the low responsible bidder if the bid price is determined to be reasonable. If the low responsive bid is determined to be unreasonable as to price, the Contractor shall attempt to negotiate a reasonable price and award a subcontract. If a reasonable price cannot be agreed upon, the Contractor shall comply with the requirements of paragraph (d) of the "Indian Preference -- Department of the Interior" clause of the contract.

(5) Maintain written records under this contract which indicate:

i.the names and addresses of all Indians seeking employment for each employment position available under this contract; ii.the number and types of positions filled by (A) Indians and (B) non-Indians, and the name, address and position of each Indian employed under this contract; iii.for those positions where there are both Indian and non-Indian applicants, and a non-Indian is selected for employment, the reason(s) why the Indian applicant was not selected; iv.actions taken to give preference to Indian organizations and Indian-owned economic enterprises for subcontracting opportunities which exist under this contract; v.reasons why preference was not given to Indian firms as subcontractors or suppliers for each requirement where it was determined by the Contractor that such preference would not be consistent with the efficient performance of the contract, and vi.the names and addresses of all Indian organizations and Indian-owned economic enterprises (A) contacted, and (B) receiving subcontract awards under this contract.

(6) The Contractor shall submit to the Contracting Officer for approval a semiannual report which summarizes the Contractor's Indian preference program and indicates (i) the number and types of available positions filled and dollar amounts of all subcontracts awarded to (a) Indian organizations and Indian-owned economic enterprises and (b) all other firms.

(7) Records maintained pursuant to this clause will be kept available for review by the Government until expiration of one (1) year after final payment under this contract, or for such longer period as may be required by any other clause of this contract or by applicable law or regulation.

(b) For purpose of this clause, the following definitions of terms shall apply:

(1) The terms "Indian," "Indian Tribe," "Indian Organization, and "Indian-owned economic enterprise" are defined in the clause of this contract entitled "Indian Preference."

(2) "Indian reservation" includes Indian reservations, public domain Indian allotments, former Indian reservations on Oklahoma, and land held by incorporated Native groups, regional corporations, and village corporations under the provisions of the Alaska Native Claims Settlement Act, (85 Stat. 688; 43 U.S.C. 1601 et seq.).

(3) "On or near an Indian Reservation" means on a reservation or reservations or within that area surrounding an Indian reservation(s) where a person seeking employment could reasonably be expected to commute to and from in the course of a work day.

(c) Nothing in the requirements of this clause shall be interpreted to preclude Indian Tribes from independently developing and enforcing their own Indian preference requirements. Such requirements must not hinder the Government's right to award contracts and to administer their provisions.

(d) The Contractor agrees to include the provisions of this clause including this paragraph (d) in each subcontract awarded under this contract and to notify the Contracting Officer of such subcontracts.

(e) In the event of noncompliance with this clause, the Contractor's right to proceed may be terminated in whole or in part by the Contracting Officer and the work completed in a manner determined by the Contracting Officer to be in the best interest of the Government.
(End of clause)

## I.5 52.232-01 PAYMENTS APRIL 1984

The Government shall pay the Contractor, upon the submission of proper invoices or vouchers, the prices stipulated in this contract for supplies delivered and accepted or services rendered and accepted, less any deductions provided in this contract. Unless otherwise specified in this contract, payment shall be made on partial deliveries accepted by the Government if--

(a) The amount due on the deliveries warrants it; or

(b) The Contractor requests it and the amount due on the deliveries is at least $1,000 or 50 percent of the total contract price.

## I.6 52.232-18 AVAILABILITY OF FUNDS APRIL 1984

Funds are not presently available for this contract. The Government's obligation under this contract is contingent upon the availability of appropriated funds from which payment for contract purposes can be made. No legal liability on the part of the Government for any payment may arise until funds are made available to the Contracting Officer for this contract and until the Contractor receives notice of such availability, to be confirmed in writing by the Contracting Officer.

## I.7 52.232-20 LIMITATION OF COST APRIL 1984

(a) The parties estimate that performance of this contract, exclusive of any fee, will not cost the Government more than--

(1) the estimated cost specified in the Schedule; or

(2) if this is a cost-sharing contract, the Government's share of the estimated cost specified in the Schedule. The Contractor agrees to use its best efforts to perform the work specified in the Schedule and all obligations under this contract within the estimated cost, which, if this is a cost-sharing contract, includes both the Government's and the Contractor's share of the cost.

(b) The Contractor shall notify the Contracting Officer in writing whenever it has reason to believe that--

(1) The costs the Contractor expects to incur under this contract in the next 60 days, when added to all costs previously incurred, will exceed 75 percent of the estimated cost specified in the Schedule; or

(2) The total cost for the performance of this contract, exclusive of any fee, will be either greater or substantially less than had been previously estimated.

(c) As part of the notification, the Contractor shall provide the Contracting Officer a revised estimate of the total cost of performing this contract.

(d) Except as required by other provisions of this contract, specifically citing and stated to be an exception to this clause--

(1) The Government is not obligated to reimburse the Contractor for costs incurred in excess of--

(i) the estimated cost specified in the Schedule; or

(ii) if this is a cost-sharing contract, the estimated cost to the Government specified in the Schedule; and

(2) The Contractor is not obligated to continue performance under this contract (including actions under the Termination clause of this contract) or otherwise incur costs in excess of the estimated cost specified in the Schedule, until the Contracting Officer--

(i) notifies the Contractor in writing that the estimated cost has been increased; and

(ii) provides a revised estimated total cost of performing this contract. If this is a cost-sharing contract, the increase shall be allocated in accordance with the formula specified in the Schedule.

(e) No notice, communication, or representation in any form other than that specified in subparagraph (d)(2) above, or from any person other than the Contracting Officer, shall affect this contract's estimated cost to the Government. In the absence of the specified notice, the Government is not obligated to reimburse the Contractor for any costs in excess of the estimated cost or, if this is a cost-sharing contract, for any costs in excess of the estimated cost to the Government specified in the Schedule, whether those excess costs were incurred during the course of the contract or as a result of termination.

(f) If the estimated cost specified in the Schedule is increased, any costs the Contractor incurs before the increase that are in excess of the previously estimated cost shall be allowable to the same extent as if incurred afterward, unless the Contracting Officer issues a termination or other notice directing that the increase is solely to cover termination or other specified expenses.

(g) Change orders shall not be considered an authorization to exceed the estimated cost to the Government specified in the Schedule, unless they contain a statement increasing the estimated cost.

(h) If this contract is terminated or the estimated cost is not increased, the Government and the Contractor shall negotiate an equitable distribution of all property produced or purchased under the contract, based upon the share of costs incurred by each.

52.217-9 OPTION TO EXTEND THE

# SECTION L -- INSTRUCTIONS, CONDITIONS AND NOTICES TO BIDDERS

## L.1 52.216-01 TYPE OF CONTRACT APRIL 1984

The Government contemplates award of a Cost Reimbursement contract resulting from this solicitation.

# Statement of Work
# Gila County Juvenile Detention Center

## SECTION 1 – GENERAL INFORMATION

### 1.1. Scope of Work

The contractor shall provide safe and secure detention/correctional services in accordance with the specific tasks as outlined in Section 3.

1.1.1. **Purpose.** The Gila County Juvenile Detention Center will actively assist the BIA-OJS by providing housing within its detention facility, for adult individuals who have been arrested and awaiting transport, or awaiting adjudication, serving sentences and/or awaiting release from custody as a result of having been arrested, or having been convicted of tribal violations occurring in Indian Country within the Truxton Canon Agency , Colorado River Agency and Pascua Yaqui Tribe jurisdiction.

### 1.2 Contractor Personnel

1.2.1 The contractor shall provide or designate a qualified and capable on-site contract manager who shall be responsible for the performance of the work.

1.2.1.1. The contract manager or alternate shall have full authority to act for the contractor on all contract matters relating to the daily operation of this contract.

1.2.1.2. The contract manager or alternate shall be available during normal working hours to discuss issues relating to the contract with authorized government officials specific to this contract.

1.2.2. **Contractor Employees.** The contractor shall ensure contract employees are qualified and trained in accordance with contractor facility standards.

### 1.3 Quality Control

1.3.1. The contractor shall make available any reports of inspection and/or sanitation reports.

### 1.4 Quality Assurance

1.4.1. The government reserves the right to visit the facility to ensure adequate services are being provided.

### 1.5. Cost for services.

1.5.1. The cost shall be $131.40 per prisoner day.

1.5.1.1. For the purpose of computing daily cost a "day" shall begin at 12:01 a.m. and end the following midnight.

1.5.1.2. Any part of a day shall be paid on a pro-rated basis (daily).

**1.6. Contract Information**

1.6.1 Contractor: Gila County Juvenile Detention Center
1425 E South Street
Globe, AZ 85501
(928) 425-6051
Fax (928) 425-3952

1.6.2 Agency: Vincente M Anchondo, SCS (example)
400 N 5th street, Floor 10
Phoenix, Arizona 85001
(602) 379-6958 ext 234
(602) 541-7166 (cellular)

**1.7. Period of Performance.**

1.7.1. Shall be for the period beginning October 1, 2008 to September 30, 2009.

**SECTION 2 - DEFINITIONS**

**2.1. General Definitions**

2.1.1. "BIA-OJS" or "Agency" means the United States Department of the Interior, Bureau of Indian Affairs (BIA), Office of Justice Services.

2.1.2. "County" means the County of Gila, in the State of Arizona, and the Gila County Juvenile Detention Center, Globe, Arizona.

2.1.3. "Agency's jurisdiction" means the jurisdiction of the BIA-OJS, Truxton Canon Agency, the Colorado River Agency and the Pascua Yaqui Tribe including within the exterior boundaries of the respective Indian Reservations and Indian Allotments.

2.1.4. "BIA-OJS Supervisory Corrections Specialist" means the Agency's District III Supervisory Correctional Specialist (SCS)

2.1.5. "Indian Country" has the same meaning as that term is defined in Section 1151 of Title 18, United States Code.

2.1.6. "Indian reservation or reservation" means within the exterior boundaries of Indian Reservation(s) and Indian Allotments of the Pascua Yaqui Tribe and respective tribes under the jurisdiction of the Truxton Canon Agency and Colorado River Agency.

2.1.7. "Tribal prisoner or tribal inmate" means a juvenile arrested under authority of the

respective Tribal Codes(s); or convicted by a tribal court with personal jurisdiction over the offender and subject matter jurisdiction over the offense for a violation of the Tribal code, within the Tribes' and Agency's jurisdiction.

2.1.8. "Delinquent child" means a person under (18) years of age, who has committed an act that violates the Law and Order Code and/or or would be a crime if committed by an adult, or is verified fugitive from another jurisdiction. [As amended by Ordinance DOI 3(98)] or detained or convicted by a tribal court with personal jurisdiction over the child/offender and subject matter jurisdiction over the Agency's jurisdiction.

2.1.9. "Tribal violation" means a violation which offends the criminal laws of the respective Tribal Code(s). This provision will not permit the confinement of juvenile offenders whose only charge or conviction is for a status offense as defined by the Office of Juvenile Justice and Delinquency Act of 1974 and subsequent revisions.

**Section 3 – Specific Tasks**

**3.1.** The Gila County Juvenile Detention Center will accept juvenile offenders who have committed violations of tribal criminal law and who are placed there by the District III SCS or their authorized agents.

3.1.1. The Gila County Juvenile Detention Center agrees to house juvenile inmates and provide the necessary food, shelter and supervision services. Any Bureau or Tribal inmate lodged in the Gila County Juvenile Detention Center facility shall be subject to the same rules and regulations as any other person lodged within the facility.

3.1.2. Any Bureau or Tribal arrestee/prisoner awaiting adjudication or awaiting release who has not served his/her full sentence shall not be released except upon written orders from the appropriate tribal court.

3.1.3. The Gila County Juvenile Detention Center will not accept any person that has attained the age of 18 years for lodging within the facility. Gila County Juvenile Detention Center will accept female and male inmates.

3.1.4. The Agency making the arrest shall be responsible for transporting tribal arrestees and prisoners to the Gila County Juvenile Detention Center, Globe, Arizona while awaiting adjudication, serving sentence and/or while awaiting release from custody.

3.1.5. Any unusual incident which affects any Bureau or tribal juvenile inmate held under this contract/purchase order will require the Gila County Juvenile Detention Center to contact the Supervisory Corrections Specialist within twenty-four (24) hours of its' occurrence, unless the incident resulted in serious injury or medical condition, death, escape, change of location of the

tribal arrestee or prisoner, in such instances, the Gila County Juvenile Detention Center shall immediately notify Vincente Anchondo, District Supervisory Corrections Specialist, at (602) 541-7166 or Justin Wendland, Supervisory Correctional Program Specialist, at (602) 908-7236.

**3.2. Medical needs of prisoners.**

3.2.1. Whenever feasible and practicable, emergency medical, mental or dental needs of Bureau or Tribal juvenile inmates, who are enrolled members of a Federally-recognized Tribe, shall be provided by the Indian Health Service or a tribal health care facility/provider.

3.2.2. The Gila County Juvenile Detention Center shall promptly notify the BIA-OJS, District III Supervisory Corrections Specialist, or designee of such needs to afford the Agency the opportunity to arrange for the treatment and the transport to treatment or to otherwise advise the Gila County Juvenile Detention Center on action to be taken.

3.2.3. In case of extreme emergency where it is not feasible or practicable to seek BIA-OJS advice in advance, the Gila County Juvenile Detention Center may obtain such care for prisoners at local, Federal, or state facilities as emergency needs dictate.

3.2.3.1 In such instances the care provider will be advised by the Gila County Juvenile Detention Center to contact the nearest Indian Health Service facility for further instructions and for claims advice within 72 hours of first furnishing care or treatment.

3.2.3.2. The Gila County Juvenile Detention Center shall promptly notify the Supervisory Corrections Specialist, District III of actions taken when such emergency circumstances occur.

3.2.4. The following are health care facilities closest to the Gila County Juvenile Detention Center:

Cobre Valley Community Hospital
5880 S Hospital Drive
Globe, Arizona 85501
(928) 425-3261

3.2.4.1. In case of **extreme** emergency only, the following Health Care Facility will be used:

Cobre Valley community Hospital
5880 S Hospital Drive
Globe, Arizona 85501
(928) 425-3261

3.2.5. In instances where Indian Health Service rejects claims for care provided by a non-Indian facility and the costs cannot be recovered by the provider under other federal or state

programs, the Gila County Juvenile Detention Center will be billed by the provider.

3.2.6. BIA-OJS Division of Corrections will only reimburse the Gila County Juvenile Detention Center for medical services if the treatment has been approved by BIA-OJS. BIA-OJS will only reimburse the contractor and not the actual provider of treatment, for authorized emergency medical, mental and dental care and medications.

3.2.7. A medical voucher (Attachment A) will be prepared listing alphabetically the health care providers and total amount due to each vendor, the full inmate name, services provided, date of service, and total amount billed for each inmate. Original invoices from the health care provider must be attached to the medical voucher. Invoices must contain name and address of vendor, full inmate name, itemized description of services provided, date of service, cost of inmate's treatment, and total amount to be reimbursed by BIA-OJS. A statement certifying the accuracy of the medical voucher shall be placed on the bottom of each medical voucher by the Gila County Juvenile Detention Center facility administrator.

3.2.8. BIA-OJS will be responsible for providing a medical release of information form signed by the juvenile offender's parent/guardian or custodian for the purpose of obtaining the medical records.

3.2.8.1. The Gila County Juvenile Detention Center will be responsible for providing medical screening of the inmate at the time of booking and the BIA-OJS Police Officer, from their respective Agency, shall provide information regarding any current medical concerns at the time of transportation and booking.

3.2.8.2. BIA OJS or Tribal Police Officer shall be responsible to obtain medical clearance for any known or obvious medical needs prior to incarceration at Gila County Juvenile Detention Center.

**Section 4 - Negative Declaration**

**4.1.** This Statement of Work (SOW) does not reflect, in this or any other context any party's position with respect to the jurisdictional authority of another. Nothing in this SOW, or in any conduct undertaken pursuant to this SOW, shall be construed as enlarging or diminishing the jurisdictional authority of either party except to the extent necessary to implement and effectuate the provisions of this SOW. Nothing herein affects to any extent, statutory or tribal code provisions regarding the sovereign immunity of the parties. Neither this SOW nor the activities of the parties pursuant to this SOW shall be used to affect the legal or equitable position of any party in any pending or future litigation. Nothing in this Statement of Work shall be construed to impact or impair the extradition authority and processes of the Parties.

4.1.2. Nothing in this SOW shall be construed as waiving the sovereign immunity of Gila County Juvenile Detention Center or their employees from suit in State, Tribal or Federal court.

Liability for suit in State, Tribal or Federal court is determined by existing State, Tribal and Federal law and is not altered by this Agreement. Nothing in this Agreement waives the sovereign immunity of the United States or BIA Police Officers, except as provided for in the Federal Tort Claims Act, 28 U.S.C. §§ 2401, 2671-2680.

**Section 5 – Board Bill**

**5.1.** The Gila County Juvenile Detention Center will submit, by the tenth day of the month, a board bill for the previous month's costs of housing BIA-OJS inmates. The board bill will contain the name and address of the Contractor, the contract or purchase order number, date that the board bill is prepared, name of each inmate housed for BIA-OJS, in conjunction with the number of days or portion of days each inmate was physically housed by the Gila County Juvenile Detention Center, daily inmate rate, and the total amount to be paid by BIA-OJS Division of Corrections. Any discrepancies shall be justified in writing by the Gila County Juvenile Detention Center.

5.1.1. The monthly board bill is to be mailed to:

Bureau of Indian Affairs
OJS-Accounting Operations
Attn: Cecilia Clark
1001 Indian School Road NW, Suite 352
Albuquerque, NM 87104

5.1.2. One copy of the board bill is to be mailed to:

Vincente Anchondo, Supervisory Correctional Specialist
BIA-Office of Justice Services
Division of Corrections/District III
400 N. 5th Street, 12th Floor
Phoenix, AZ 85004

**Section 6 – Right to Refuse Placement**

**6.1.** Notwithstanding any of the above provisions of this SOW, should a limit be set by statute, judicial, or administrative decision, or otherwise, on the number of prisoners, which the Gila County Juvenile Detention Center may lawfully lodge in its facility at any one time, then Gila County Juvenile Detention Center may refuse to lodge any BIA-OJS prisoners if the number of prisoners in the Gila County Juvenile Detention Center at that time has reached 75 % of the maximum capacity allowable by law.

**Section 7 – Hold Harmless**

**7.1.** The Gila County Juvenile Detention Center agrees to hold harmless the BIA-OJS from:

7.1.1. Violation of constitutional rights arising from the detention of persons in the Gila County Juvenile Detention Center pursuant to this SOW.

7.1.2. The BIA-OJS and the Gila County Juvenile Detention Center agrees to assume its' own liability for any and all claims of any nature, including all costs, expenses and attorney's fees, which may in any manner, result from or arise out of this agreement.

**Section 8 - Indemnification, Liability, and Insurance**

**8.1** The BIA-OJS assumes no liability and will not defend or indemnify for any claims, judgments, or liabilities by third parties for property damage, personal injury, or civil liability arising from the actions of the County or its officers, pursuant to this SOW.

**8.2.** The Gila County Juvenile Detention Center assumes no liability and will not defend or indemnify for any claims, judgments, or liabilities by third parties for property damage, personal injury, or civil liability arising from the actions of the BIA-OJS.

**8.3.** Each party shall remain solely responsible for the ordinary expenses of its employees and property, including insurance.

**8.4.** The Gila County Juvenile Detention Center will at all times maintain insurance coverage to protect the BIA-OJS from reasonable loss by liability claims arising out of the negligence of Grady County Detention or its agents or employees in the performance of this SOW.

**8.5.** Nothing in this SOW is intended to alter the parties' insurance obligations toward their employees or others.

**ARF-1010** **Consent Agenda Item 5- D**

**Regular BOS Meeting**

**Meeting Date:** 01/10/2012

| | | | |
|---|---|---|---|
| Submitted For: | Steve Stratton, Public Works Division Director | Submitted By: | Valrie Bejarano, Contracts Support Specialist, Finance Department |
| Department: | Public Works Division | Division: | Roads |
| Fiscal Year: | FY 2011-2012 | Budgeted?: | Yes |
| Contract Dates Begin & End: | 12-17-11 to 12-16-2012 | Grant?: | No |
| Matching Requirement?: | No | Fund?: | Renewal |
| Presenter's Name: | | | |

## Information

### Request/Subject

Amendment No. 2 to Contract 050709-1 with Southwest Asphalt for 1/2 Chips and Asphalt in the Copper Region

### Background Information

Effective August 17, 2009, Gila County and Southwest Asphalt entered into a contract whereby the contractor agreed to provide 1/2 chips and asphalt to various locations in the Copper Region of Gila County.

### Evaluation

Per Section 2.2 of the contract the County shall have the right to renew the Contract for two additional one year periods.
On February 1, 2011, Amendment No. 1 was approved by the Board to extend the contract to December 16, 2011.
Amendment No. 2 will extend the contract for its final one year term from December 17, 2011, to December 16, 2012.
All terms, conditions and provisions of the original contract shall remain the same and apply during the renewal period.

### Conclusion

The Consolidated Roads Department requires 1/2 chips and asphalt in order to maintain roads in Gila County. Extending contract 050709-1 with Southwest Asphalt would provide these products for the Copper Region for one more year.

### Recommendation

The Public Works Director recommends that the Board of Supervisors approve amendment No. 2 to contract 050709-1 to extend the contract term for one year for 1/2 chips and asphalt.

### Suggested Motion

Authorization of the Chairman's signature on Amendment No. 2 to Contract 050709-1 between Gila County and Southwest Asphalt whereby the contractor will continue to provide 1/2 Chips and Asphalt for repair and maintenance of Gila County Copper Region roads from December 17, 2011, to December 16, 2012.

Attachments

Amendment No. 1 to Contract 050709-1
Amendment No. 2 Contract 050709-1
Original Contract No. 050709-1 Southwest Asphalt
Legal Explanation

**Tommie C. Martin, District I Supervisor**
P.O. Box 2297 Payson, AZ. 85547
(928) 474-2029 Ext. 7100

**Michael A. Pastor, District II Supervisor**
1400 E. Ash St. Globe, AZ. 85501
(928) 425-3231 Ext. 8753

**Shirley L. Dawson, District III Supervisor**
1400 E. Ash St., Globe, AZ 85501
(928)425-3231 Ext. 8511

**Don E. McDaniel Jr., County Manager,**
Phone (928) 425-3231 Ext.8761

**Joseph Heatherly, Finance Director**
1400 E. Ash St., Globe, AZ 85501
(928)425-3231 Ext. 8743

FAX ((28)425-8104
TTY: 7-1-1

**GILA COUNTY**
**www.gilacountyaz.gov**

# CONTRACT NO. 050709-1

## CHIPS AND ASPHALT
## COPPER REGION

## AMENDMENT #1

Effective August 17, 2009, Gila County and Southwest Asphalt entered into a contract whereby Southwest Asphalt agreed to provide ½ Chips and Asphalt to various locations in the Copper Region of Gila County for a sixteen (16) month period. Per Section 2.2 of the Contract, the County shall have the right, at its sole option, to renew the Contract for two (2) additional one (1) year periods.

Amendment No. 1 will allow the Contract period to be extended for a one (1) year period from December 17, 2010 to December 16, 2011.

All terms, conditions and provisions of the original Contract shall remain the same and apply during the renewal period.

**IN WITNESS WHEREOF,** three (3) identical counterparts of this contract, each which shall include original signatures and for all purposes be deemed an original thereof, have been duly executed by the parties hereinabove named, on this 1st day of February, 2011.

**CONTRACT NO. 050709-1 CHIPS AND ASPHALT COPPER REGION**
**AMENDMENT #1**

**GILA COUNTY:**

**GILA COUNTY BOARD OF SUPERVISORS**

**Michael A. Pastor, Chairman, Board of Supervisors**

**SOUTHWEST ASPHALT**

**Supplier Signature**

GREG GRONEBERG
**Print Name**

**ATTEST**

**Marian Sheppard, Chief Deputy Clerk of the Board**

**APPROVED AS TO FORM:**

**Bryan B. Chambers, Chief Deputy County Attorney**
***for* Daisy Flores, County Attorney**

**Tommie C. Martin, District I Supervisor**
P.O. Box 2297 Payson, AZ. 85547
(928) 474-2029 Ext. 7100

**Michael A. Pastor, District II Supervisor**
1400 E. Ash St. Globe, AZ. 85501
(928) 425-3231 Ext. 8753

**Shirley L. Dawson, District III Supervisor**
1400 E. Ash St., Globe, AZ 85501
(928)425-3231 Ext. 8511

**Don E. McDaniel Jr., County Manager,**
Phone (928) 425-3231 Ext.8761

**Joseph Heatherly, Finance Director**
1400 E. Ash St., Globe, AZ 85501
(928)425-3231 Ext. 8743

FAX ((28)425-8104
TTY: 7-1-1

**GILA COUNTY**
**www.gilacountyaz.gov**

**CONTRACT NO. 050709-1**

**CHIPS AND ASPHALT**
**COPPER REGION**

**AMENDMENT #2**

Effective August 17, 2009, Gila County and Southwest Asphalt entered into a contract whereby Southwest Asphalt agreed to provide ½ Chips and Asphalt to various locations in the Copper Region of Gila County for a sixteen (16) month period. Per Section 2.2 of the Contract, the County shall have the right, at its sole option, to renew the Contract for two (2) additional one (1) year periods.

On February 1, 2011 Amendment No. 1 was approved by the Board of Supervisors to extend the contract for a one (1) year period from December 17, 2010, to December 16, 2011.

Amendment No. 2 will allow the contract to be extended for its final one (1) year term from December 17, 2011, to December 16, 2012.

All terms, conditions and provisions of the original Contract shall remain the same and apply during the renewal period.

**IN WITNESS WHEREOF,** three (3) identical counterparts of this contract, each which shall include original signatures and for all purposes be deemed an original thereof, have been duly executed by the parties hereinabove named, on this _____ day of _____, 2011.

**CONTRACT NO. 050709-1**

**AMENDMENT #2**

**GILA COUNTY:**

**GILA COUNTY BOARD OF SUPERVISORS**

_____

**Tommie C. Martin, Chairman, Board of Supervisors**

**ATTEST**

_____

**Marian Sheppard, Chief Deputy Clerk of the Board**

**APPROVED AS TO FORM:**

_____

**Bryan B. Chambers, Chief Deputy County Attorney**
***for* Daisy Flores, County Attorney**

**SUPPLIER:**

**SOUTHWEST ASPHALT**

_____

**Suppliers Signature**

GREG GRONBERG

**Print Name**

# CHIPS, AB, & ASPHALT

## BID NO. 050709-1

## BIDDER'S INFORMATION
## CONTRACT DOCUMENTS AND SPECIFICATIONS


*BOARD OF SUPERVISORS*
Shirley L. Dawson, Chairman
Tommie C. Martin, Vice Chairman
Michael A. Pastor, Member

*County Manager / Clerk of the Board*
Steven L. Besich

*Public Works Director*
Steve Stratton

## TABLE OF CONTENTS


| Content | Page |
|---|---|
| **Table of Contents** | **1** |
| **Advertisement** | **2** |
| **Scope of Work** | **3** |
| **Exhibit "A"; Instructions to Suppliers** | **4-7** |
| Preparation of Sealed Proposal | 4 |
| Amendments | 5 |
| Inquires | 5 |
| Late Proposal | 6 |
| Submittal Proposal Format | 6 |
| **General Terms and Conditions** | **8-9** |
| Acceptance Contract/Agreement | 8 |
| Protests | 9 |
| Laws & Ordinances | 9 |
| **Exhibit "B" Contract Award Agreement** | **9-13** |
| Overcharges by antitrust Violations | 10 |
| Authority to Contract | 10 |
| Contract Amendments | 10 |
| Contract Default | 11 |
| Right of Assurance | 11 |
| Co-op Intergovernmental Purchasing Agreement | 11 |
| Cancellation of County Contracts | 11 |
| Termination of Contract | 12 |
| Proposal Evaluation Process | 13 |
| **Exhibit "C", Minimum Product Specifications/Information** | **14-19** |
| Section 1.0; General Purpose | 14 |
| Section 2.0; Proposal Pricing | 15 |
| Section 3.0; Price Adjustments | 15 |
| Section 4.0; Ordering / Pricing | 16 |
| Section 5.0; Product Specifications | 18 |
| **Insurance Provisions** | **20-23** |
| Indemnification Clause | 20 |
| Insurance Requirements | 20 |
| Commercial General Liability – Occurrence Form | 20 |
| Automobile Liability Insurance | 21 |
| Worker's Compensation and Employee's Liability | 21 |
| Builders' Risk Insurance or Installation Floater | 21 |
| Additional Insurance Requirements | 22 |
| Notice of Cancellation | 22 |
| Acceptability of Insurers | 23 |
| Verification of Coverage | 23 |
| Subcontractors | 23 |
| Approval | 23 |
| **Qualification and Certification Forms** | **24-25** |
| **Proposal Price Sheet** | **26** |
| **Reference List** | **27** |
| **No Collusion in Bidding** | **28** |
| **Intentions Concerning Subcontracting** | **29** |
| **Anti-Terrorism Warranty** | **30** |
| **Legal Arizona Workers Act Compliance** | **31** |
| **Check List & Addenda Acknowledgment** | **32** |
| **Offer Page (Signature Required)** | **33-34** |

**GILA COUNTY**
**REQUEST FOR PROPOSALS**
**BID NO. 050709-1 CHIPS, AB & ASPHALT**

**Notice is hereby given that Gila County is requesting proposals from qualified Supplier(s) to provide Chips, AB, & Asphalt as specified for the Gila County Public Works Division.**

**SUBMITTAL DUE DATE:** **2:00 P.M., Local AZ Time, Thursday, June 18 2009**

**RETURN PROPOSAL TO:** **GILA COUNTY PUBLIC WORKS**
**GUERRERO COMPLEX**
**1400 EAST ASH STREET**
**GLOBE, ARIZONA**

**NOTICE IS HEREBY GIVEN,** that sealed competitive Proposals for the material or services as specified will be received by the Gila County Public Works Division, until the time and date cited.

Proposals received by the correct time and date will be publicly opened and recorded thereafter in the Public Works Guerrero Conference Room or other site, which may be designated. Any proposal received later than the date and time specified above will be returned unopened. **Late proposals shall not be considered.** The prevailing time shall be the atomic clock in the reception area of the Guerrero Complex building.

Interested suppliers may obtain a copy of this solicitation by calling the Gila County Public Works Division at 928-402-8612 and are strongly encouraged to carefully read the entire Request for Proposal.

Questions regarding the technical aspects of this Request for Sealed Proposal should be directed to, Brent Cline, Consolidated Roads Manager, ( 928)402-8526

Questions regarding the general terms and conditions of this Request for Sealed Proposals and Professional Services Contract should be directed to, Valrie Bejarano, (928)402-8612.

The Board of Supervisors reserves the right to reject any or all proposals, or to accept any proposals, or to waive any informality in any proposal, or to withhold the award if deemed in the best interest of Gila County. All procurement activities conducted by Gila County are in conformance with the rules and regulations of the Gila County procurement code. A copy of the Code is available for review in the office of the Clerk of the Board, Gila County Courthouse, 1400 E. Ash St., Globe, AZ.

**Arizona Silver Belt Advertisement Dates: June 3rd and 10th, 2009**

Signed: _____ Date:____/____/____
Bryan B. Chambers, Chief Deputy County Attorney
*for* Daisy Flores, County Attorney

Signed: _____ Date: ____/____/____
Steven L. Besich, County Manager / Clerk of the Board

## GENERAL SCOPE OF WORK

It is the intent of this Request for Proposals to establish a contract for a supplier(s) to furnish Chips, AB, and Asphalt to the Public Works Division at various locations for the Copper and Timber Regions of Gila County.

All specifications, and terms and conditions, under the Contract includes furnishing at least, but not limited to, minimum specification of product specifications (see attached: Exhibit "C") Pages 14 through 19 and Price Sheet page 26.

The County may choose to award this Request for Proposals to one or more supplier(s) depending on what is deemed to be in the best interest of Gila County.

## INSTRUCTIONS TO SUPPLIERS

**IMPORTANT: EXHIBIT "A", INSTRUCTIONS TO SUPPLIERS AND EXHIBIT "B", SUPPLIERS AWARD AGREEMENT ARE BASIC CONTENT TO GILA COUNTY BID PACKAGES. INDIVIDUAL PROPOSALS MAY REQUIRE DIFFERENT LANGUAGE FOR INSTRUCTIONS AND AWARD AGREEMENTS. WHERE APPLICABLE, SUCH CHANGES WILL APPEAR IN EXHIBIT "C", MINIMUM PRODUCT SPECIFICATIONS AND INFORMATION AND TAKE PRECEDENCE OVER THE LANGUAGE APPEARING IN EXHIBITS "A" & "B".**

**EXHIBIT "A" INSTRUCTIONS TO SUPPLIERS**

**Preparation of Sealed Proposals**

A. Sealed Proposals will be received by the County of Gila Public Works Division, from individuals and suppliers to deliver the product(s), goods and services contained to establish a contract for specified locations within Gila County. The County seeks sealed proposals only from qualified, experienced suppliers able to provide service which is, in all respects, responsive to the specifications. All proposals shall be on the forms provided in this Request for Proposal's package. It is permissible to copy these forms if required.

B. Before submitting its Proposal and Qualification Forms each Supplier shall familiarize itself with the Scope of Work, and laws, regulations and other factors affecting performance of work. It shall carefully correlate its observations with requirements of the Contract and otherwise satisfy itself of the expense and difficulties attending the performance of the work. The submission of a proposal will constitute a representation of compliance by the supplier. The submission of a proposal will constitute a representation of compliance by the supplier. There will be no subsequent financial adjustment, other than that provided for by the Contract, for lack of such familiarization.

C. Suppliers must complete the Proposal and Qualification Forms provided in this Request for Proposals package in full, original signature in ink, by the person(s) authorized to sign the proposal and to be submitted at the time of Proposal opening, and made a part of this contract. The County will use the Proposal and Qualification Form in evaluating the capacity of suppliers to perform the Scope of Services as set forth in the Contract. Failure of any supplier to complete and submit the Price Sheet and Signature/Offer Page at time and place of opening shall be grounds for automatic disqualification of supplier(s) from further consideration.

*Instructions to Suppliers continued.....*

D. The names of all persons authorized to sign the proposal must also be legibly printed below the signature. Evidence of the authority of the person signing shall be furnished.

E. The full name of each person or company interested in the RFP shall be listed on the proposal.

F. No alterations in Proposals, or in the printed forms therefore, by erasures, interpolations, or otherwise will be acceptable unless each such alteration is signed or initialed by the supplier; if initialed, the County may require the supplier to identify any alteration so initialed.

## Amendments

Any addendum issued as a result of any change in this Request for Proposals must be acknowledged by all suppliers in the following manner:

1. Completion of the Supplier Checklist and Acknowledgment of Addenda Form on page 32 (the numbers of which shall be filled in on the Proposal Form).
2. Copies of all addenda must be attached to the submittal.

Failure to indicate receipt of addenda in one of the above manners may result in a proposal being rejected as non-responsive.

## Inquires

A. Any questions related to this Request for Proposals must be directed to those whose names appear on the Notice. Questions should be submitted in writing when time permits. The Gila County Supervisors, at their sole discretion, may require all questions be submitted in writing. Any correspondence related to the Request for Proposals should refer to the appropriate Request for Proposals number, page, and paragraph number. However, the suppliers(s) must not place the Request for Proposals number on the outside of an envelope containing questions since such an envelope may be identified as a Sealed Proposal and may not be opened until after the official Request for Proposals due date and time. Questions received less than three (3) working days prior to the date for opening Proposals will be answered only if time permits. Only questions answered by formal written addenda will be binding. Oral and other interpretations or clarifications will be without legal effect.

*Instructions to Suppliers continued.....*

B. Proposal results ARE NOT provided in response to telephone inquires. A tabulation of proposals received is on file in the Gila County Board of Supervisors and Procurement offices and available for review after contract award.

**Late Proposals**

Any Proposal received later than the date and time specified on notice for Sealed Proposal will be returned unopened. Late Proposals shall not be considered. Any supplier submitting a late Proposal shall be so notified.

**Submittal Proposal Format:**

**It is requested that One (1) Original and Two (2) copies ( 3 TOTAL) with original signatures on all three (3) of the Proposal and Qualification Forms, Reference List, Price Sheet, and Offer Page shall be submitted on the forms and in the format specified in the Request for Proposal.** The County will not be liable for any cost incident to the preparation of Proposals, materials, reproductions, presentations, copy-right infringements, etc. It is permissible to copy these forms if required. Facsimiles or mailgrams shall not be considered.

1. By signature in the offer section of the Offer and Acceptance page, supplier certifies:

   A. The submission of the offer did not involve collusion or other anti-competitive practices.

   B. The supplier has not given, offered to give, nor intends to give at any time hereafter, any economic opportunity, future employment, gift, loan, gratuity, special discount, trip, favor, or service to a public servant in connection with the submitted offer.

   C. In order to conserve resources, reduce procurement costs, improve timely acquisition and cost of supplies and to improve efficiency and economy of procurement, any political subdivision, Stated, County, City, Town, etc., of the State of Arizona, will be allowed by supplier awarded the contract to purchase the same products, goods and services, at the same prices stated in the Proposal. Delivery charges may differentiate depending on geographical location.

*Instructions to Suppliers continued.....*

2. Proposals submitted early may be modified or withdrawn by notice to the party receiving proposals at the place and prior to the time designated for receipts of Proposals.

3. The County is not responsible for any supplier's errors or omissions. Negligence in preparing an offer confers no right to the supplier unless the supplier discovers and corrects such errors prior to the Proposal deadline.

**The Proposal shall be submitted in a sealed envelope, a *minimum of Three (3) copies with original signatures* shall be provided by the Supplier. The words "REQUEST FOR PROPOSAL" with Proposal Title "CHIPS, AB, & ASPHALT", Contract Number, "050709-1", Date "JUNE 18, 2009", and Time "2:00 PM/MST" of Proposal opening shall be written on the envelope. The Supplier shall assume full responsibility for timely delivery at the location designated in the Notice.**

## GENERAL TERMS AND CONDITIONS

### Award Contract

1. The Gila County Board of Supervisors reserves the right to award any Proposal by individual line item, by group of line items or as total, or any part thereof, whichever is deemed to be in the best interest, most advantageous of the County of Gila.

    a. Notwithstanding any or other provisions of the RFP, the County reserves the right to:

        1. Waive any immaterial defects or informalities; or
        2. Reject any or all Proposals; or portions thereof; or
        3. Reissue a Request for Proposal.

2. It is the responsibility of the Gila County Board of Supervisors to let the County contracts to the lowest responsive and responsible supplier(s). To ensure that all Suppliers are experienced, reasonably equipped and adequately financed to meet their contractual obligations, a determination of responsibility shall be made by the Gila County Board of Supervisors prior to contract award.

3. Further, the County reserves the right to reject the Proposal of any supplier(s) who has previously failed to perform adequately after having once been awarded a prior Proposal for furnishing and installing materials similar in nature.

4. All submitted forms provided in this Request for Proposals will be reviewed by the Gila County Board of Supervisors.

5. Those Supplier(s) who, in the opinion of the Gila County Board of Supervisors, are best qualified and whose Proposals are most advantageous of the County <u>may</u> be invited to appear before the Board for an oral review.

6. The apparent successful Supplier(s) shall sign and file with the County, within ten (10) days after Notice of Intent to Award, all documents necessary to successfully execute the contract.

*General Terms and Conditions continued.....*

## Protests

Only other Suppliers who have submitted a bid proposal have the right to protest. A protest of a proposed award or of an award must be filed within ten (10) days after the award by the Board of Supervisors. A protest must be in writing and must include the following:

A. Name, address and telephone number of the protester.
B. Signature of the protester or its representative, and evidence of authority to sign.
C. Identification of the contract and the solicitation or contract number.
D. Detailed statement of the legal and factual grounds of protest including copies of relevant documents.
E. The form of relief requested.

All protests shall be sent to the attention of the Gila County Board of Supervisors, 1400 East Ash Street, Globe, Arizona 85501.

## Laws and Ordinances

This agreement shall be enforced under the laws of the State of Arizona and Gila County. Supplier shall maintain in current status all Federal, State and Local licenses and permits required for the operation of the business conducted by the Supplier. The Supplier shall comply with the applicable provisions of the Americans with Disabilities Act (Public Law 101-336, 42 U.S.C. 12101-12213) and applicable federal regulations under the act.

## EXHIBIT "B" SUPPLIER AWARD AGREEMENT

This exhibit shall serve as an example of the contract agreement to any Supplier, their agents, subcontractors and/or representatives, awarded this or any portion of this contract by the County, by submitting Proposals to this or any other solicitation requiring sealed Proposals, does hereby agree to the following provisions. Proof of acceptance of these provisions will be the Supplier's signature(s) appearing on page 33, Suppliers OFFER PAGE, and Exhibit "D" Suppliers Qualification and Certification forms(s) pages 24-25.

*General Terms and Conditions continued.....*

## Overcharges by Antitrust Violations

The County maintains that, in actual practice, overcharges resulting from antitrust violations are borne by the purchaser. Therefore, to the extent permitted by law, the Supplier hereby assigns to the County any and all claims for such overcharges as to the goods or services used to fulfill the contract.

## Authority to Contract

This contract shall be based upon the Request for Proposal issued by the County and the offer submitted by the Supplier in response to the RFP. The offer shall substantially conform to the terms, conditions, specifications and other requirements set forth within the text of the RFP. The county reserves the right to clarify any contractual terms with the concurrence of the Supplier; however, any substantial non-conformity in the offer, as determined by the Gila County Attorney, shall be deemed non-responsive and the offer rejected. The contract shall contain the entire agreement between Gila County and the Supplier relating to these requirements and shall prevail over any and all previous agreements, contracts, proposals, negotiations, purchase orders, or master agreement in any form. The contract activity is issued under the authority of the Gila County Manager, after the Gila County Board of Supervisors approves the award. No alteration of any portion of the contract, any items or services awarded, or any other agreement that is based upon this contract may be made without express written approval of the Gila County Board of Supervisors in the form of an official contract amendment. Any attempt to alter any documents on the part of the Supplier or any agency is a violation of the County Procurement Code. Any such action is subject to the legal and contractual remedies available to the County inclusive, but not limited to, contract cancellation, suspension and/or debarment of the Supplier.

## Contract Amendments

The contract shall be modified only by a written contract amendment signed by the Gila County Board of Supervisors and persons duly authorized to enter into contracts on behalf of the Supplier.

*General Terms and Conditions continued.....*

## Contract Default

A. The County, by written notice of default to the Supplier, may terminate the whole or any part of this contract in any one of the following circumstances:

1. If the Supplier fails to make delivery of the supplies or to perform the services within the times specified; or
2. If the Supplier fails to perform any of the other provisions of this contract; and fails to remedy the situation within a period of ten (10) days after receipt of notice.

B. In the event the County terminates this contract in whole or part, the County may procure supplies or services similar to those terminated, and the Supplier shall be liable to the County for any excess costs for such similar supplies or services.

## Right to Assurance

Whenever one party to this contract in good faith has reason to question the other party's intent to perform, the other party may demand that the other party give a written assurance of this intent to perform. In the event that a demand is made and no written assurance is given within five (5) days, the demanding party may treat this failure as an anticipatory repudiation of this contract.

## Co-op Use of Contract – Intergovernmental Purchasing

Gila County has entered into an active purchasing agreement with other political subdivisions, cities, and towns of the State of Arizona in order to conserve resources, reduce procurement costs and improve timely acquisition and cost of supplies, equipment and services. The Supplier(s) to whom this contract is awarded may be requested by other parties of said interactive purchasing agreements to extend to those parties the right to purchase supplies, equipment and services provided by the Supplier under this contract, pursuant to the terms and conditions stated herein. Any such usage by other entities must be in accord with the rules and regulations of the respective entity and the approval of the Supplier.

## Cancellation of County Contracts

This contract is subject to the cancellation provisions of **A.R.S. §38-511.**

*General Terms and Conditions continued.....*

## Termination of Contract

The County, with or without cause, may terminate this contract at any time by mutual written consent, or by giving **thirty (30)** days written notice to you. The County at its convenience, by written notice, may terminate this contract, in whole or in part. If this contract is terminated, the County shall be liable only for payment under the payment provisions of this contract for the services rendered and accepted material received by the County before the effective date of termination.

The County reserves the right to cancel the whole or any part of this contract due to failure of Supplier(s) to carry out any term, promise, or condition of the contract. The County will issue a written ten (10) day notice of default to Supplier(s) for acting or failing to act as in any of the following:

1. In the opinion of the County, Supplier fails to perform adequately the stipulations, conditions or services/specifications required in the contract.
2. In the opinion of the County, Supplier attempts to impose on the County material products, or workmanship, which is of unacceptable quality.
3. Supplier fails to furnish the required service and/or product within the time stipulated in the contract.
4. In the opinion of the County, Supplier fails to make progress in the performance of the requirements of the contract and/or give the County a positive indication that Supplier will not or cannot perform to the requirements of the contract.

Each payment obligation of the County created hereby is conditioned upon the availability of County, State and Federal funds, which are appropriated or allocated for the payment of such an obligation. If funds are not allocated by the County and available for the continuance of service herein contemplated, the contract period for the service may be terminated by the County at the end of the period for which funds are available. The County shall notify the Supplier at the earliest possible time which service may be affected by a shortage of funds. No penalty shall accrue to the County in the event this provision is exercised, and the County shall not be obligated or liable for any future payments due or for any damages as a result of termination under this paragraph.

*General Terms and Conditions continued.....*

## Proposal Evaluation Process

**All proposals shall be evaluated by using the following criteria. The recommendation for contract award will be made to the responsible Supplier whose proposal is determined to be the most advantageous to Gila County when applying the weighted criteria: 50% price, 25% compliance with specifications, and 25% serviceability. The County reserves the right to award in whole or in part, by item or group of items, by section or geographic area, or make multiple awards, where such action serves the County's best interest.**

## General

After receipt of all proposals, each submittal shall be screened to determine if any shall be deemed non-responsive. Unsigned proposals, unacknowledged Addenda, incomplete proposals, non-conformance with mandatory requirements, etc., may result in the determination of non-responsive.

**Subsequent to the initial review, all remaining proposals shall be reviewed by the Gila County Public Works Fiscal Manager to evaluate the information submitted, perform tests when necessary and make comparisons in order to approve or reject the Request. If rejected, the purchasing department shall give written notice to the Supplier submitting this request.**

## MINIMUM SPECIFICATIONS -TERMS AND CONDITIONS

**Exhibit "C" Minimum Specifications – Product Specifications**

**Purpose**

It is the intent of Gila County to establish, by this Request for Proposals, the contract for a Supplier(s) to provide Chips, AB, and Asphalt.

| |
|---|
| This specification is intended to describe the type, size, and quality, which will best meet the demands of the using department. It is **NOT** intended to favor any one brand or make. The mention of brand names or components merely serves to specify the quality or general type required. |

**SECTION 1.0**

**General Purpose**

1.1 All product specifications are **minimum.** Supplier must provide product specification sheet. MSDS sheets must be included. Please provide MSDS sheets in MS Word Format or Adobe Acrobat on compact disc or print them.

1.2 Supplier(s) should have adequate manufacturing / stocking facilities to serve the needs of Gila County.

1.3 All Proposals must represent the entire package. Partial awards will not be made unless otherwise stated in the Proposal specifications.

1.4 The parties specifically understand and agree that the quantities used for bidding purposes are estimates of County needs and in no event shall the County be obligated to purchase the exact quantities of any item set forth in the Proposal. The County does not guarantee any maximum or minimum amounts of purchase.

1.5 Supplier shall review its Proposal submission to assure the following requirements are met.

1.5.1 One (1) original and two (2) copies with original signatures of all submissions is MANDATORY.

*Minimum Specifications continued.....*

1.5.2 Qualification and Certification Forms, (page 24 & 25)

1.5.3 Price Sheet, (page 26)

1.5.4 References, (page 27)

1.5.5 No Collusion in Bidding, (page 28)

1.5.6 Intentions for Subcontracting, (page 29)

1.5.7 Anti-Terrorism Warranty, (page 30)

1.5.8 Legal Arizona Workers Act Compliance, (page 31)

1.5.9 Checklist and Addenda Acknowledgment, (page 32)

1.5.10 Agreement page, MANDATORY (Attachment page 33-34)

## SECTION 2.0

### Proposal Pricing

2.1 The Supplier shall submit the Proposal in the form of a firm unit price for the product. Prices shall be in effect for the duration of the contract period at the unit prices bid, subject to the price adjustment in *Section 4.0.* Supplier shall incorporate all profit and discount into their price.

2.2 The term of the contract shall commence upon award and shall remain in effect for a period of sixteen (16) months unless terminated, canceled or extended as otherwise provided herein. The Supplier agrees that Gila County shall have the right, at its sole option, to renew the contract for two (2) additional one (1) year periods. In the event the County exercises such a right, all terms, conditions and provisions of the original contract shall remain the same and apply during the renewal period.

2.3 Suppliers are encouraged to offer additional pricing for other related products, items, and/or components which are not specifically addressed as line items in the Request for Proposals. Pricing offered should be noted on the price sheet, page 26, in the format requested. Pricing documents/catalogs shall accompany any additional pricing offered.

*Minimum Specifications continued.....*

## SECTION 3.0

### Price Adjustments

3.1 Prices shall be in effect for the duration of the contract at the unit prices bid, with a price adjustment as follows:

3.1.1 The term "bituminous material" as used herein shall include asphalt cement, liquid asphalt and emulsified asphalt.

3.1.2 "Initial Cost" of bituminous materials as used herein shall mean the cost as determined by the ADOT Price Adjustment for Bituminous Material for the month proposals are opened (See http://www.azdot.gov/highway/cns/bitmat/asp).

3.2 The contract unit price for each item that contains bituminous material will be considered to include all costs of materials as required, including the "initial cost" of bituminous material. The initial cost of bituminous material will be based on the ADOT Monthly Index as follows:

3.2.1 The Adjustment in compensation, either increase or decrease, for bituminous material will be based on the dollar amount change in the ADOT Monthly Index from the month in which the contract was bid compared to the month in which the material was used, on a calendar month basis. This adjustment will apply only to the amount of bituminous material used in the bid item and not to the overall unit cost. The amount of bituminous material in each bid item will be as follows: MC's and liquid asphalt 100%, Terminal blend asphalt rubber 93%, Emulsions, Concentrate 60% (diluted 2:1 40%, diluted 1:1 30%).

3.2.2 Additionally, the adjustment for compensation of bituminous materials will be based on the tons of bituminous material prior to dilution. This adjustment will apply to bituminous material only.

3.2.3 Sample of formula as follows:

($ amount change in ADOT index) X (% of bituminous material) + (amount bid)

3.3 The Supplier certifies in signing this Bid Proposal that the price will be no higher than the lowest price the Supplier charges other buyers for similar quantities under similar conditions.

*Minimum Specifications continued.....*

## SECTION 4.0

## Ordering

4.1 Ordering

4.1.1 Gila County does not warrant the order quantity of any materials or services prior to actual need. Gila County's Public Works personnel may re-order materials as it becomes necessary or based on the required needs within the County during the term of this contract.

4.1.2 Material Supplier shall be given advance notice of material order as needed by Gila County.

4.1.3 SAMPLES: Supplier may be requested to furnish samples of products for examination by the County. Any items so requested shall be furnished within five (5) working days from the date of request and furnished at no cost to the County and sent to the address designated in the Request for Proposals. Unless otherwise specified, materials purchased will be inspected by the Using Agency to ensure the product meets the quality and quantity requirements of the Specifications. Material may be sampled for compliance, as deemed necessary by the County. Any material not meeting the specifications of the contract will be rejected.

4.1.4 TESTING: The awarded Material Supplier is responsible for all laboratory or other appropriate agency for analysis and testing as to whether the product conforms in all respects to the Specifications. It is the responsibility of the material Supplier to furnish the product material certifications at the time of pick-up. Testing shall be done in accordance with ADOT Standard Specifications Section 1005.

4.2 **PRICING:** Prices shall be F.O.B. at plant. Material Supplier – Supplier shall retain title and control of all goods until they are picked-up.

**4.3 MATERIAL MEASURES AND PRICING ADJUSTMENTS:** The product shall be measured by the ton and shall be weighed on approved scales furnished by the Material Supplier or certified public scales at the Suppliers expense. Quantities of material will be determined by the collected weight tickets at the source. Suppliers shall provide certified weight tickets for all picked-up quantities.

*Minimum Specifications continued.....*

4.3.1 Cancellation: Gila County retains the right to cancel orders at any time in the event of inclement weather or other emergency, and other unforeseen work stoppages beyond the control of the successful Supplier or the County. The standby rate shall only apply to time at the project site and until such time as the equipment is directed to leave due to inclement weather or other unforeseen conditions.

## SECTION 5.0

### Product Specifications – Minimum Specifications: Bid No. 050709-1 Chips, AB, and Asphalt

The Supplier shall provide a source of Cover Material as described in the Arizona Department of Transportation Standard Specifications for Road and Bridge Construction as stated in Section 404-2.02.© Aggregate Materials.

The aggregate material will be sampled for acceptance in the final stockpile before incorporation into the work. The aggregate material will be considered to be acceptable when the test values for the specified cover material characteristic are within the specified limits. Test values will be provided by the Supplier upon request.

### Asphalt

M.A.G. Specifications; 710, Table 710-1; Oil Content is 5.1

### AB

ADOT Specifications, Class II

### Chips

Aggregate for cover material shall be of clean sand, gravel or crushed rock and shall be free from lumps or balls of clay and shall not contain calcareous or clay coatings, caliches, synthetic materials, organic matter or foreign substances.

*Minimum Specifications continued.....*

The grade shall meet the following requirements when tested in accordance with the requirements of Arizona Test Method 201.

| Minimum Specifications – Chips (Arizona Test Method 201) | |
|---|---|
| **Sieve Size** | **Percent Passing** |
| 3.8 | 100 |
| No. 4 | 0 - 25 |
| No. 8 | 0 - 5 |
| No. 200 | 0 – 2.0 |

The loss on abrasion will be determined in accordance with the requirements of AASHTO T 96 and shall meet the following Requirements.

- Maximum loss of nine percent (9%) at one-hundred (100) revolutions.
- Maximum loss of forty percent (40%) at five-hundred (500) revolutions.

Percent of carbonates in aggregate shall be a maximum of thirty (30) when tested in accordance with the requirements of Arizona Test Method 238.

Percent of fractured coarse aggregate particles shall be a minimum of seventy (70) when tested in accordance with the requirements of Arizona Test Method 212.

Flakiness Index shall be a maximum of twenty-five (25) when tested in accordance with the requirements of Arizona Test Method 233.

Bulk Oven Dry Specific Gravity shall range from 2.30 to 2.85 when tested in accordance with the requirements of Arizona Test Method 210.

## INSURANCE PROVISIONS

### INDEMNIFICATION CLAUSE:

The Supplier agrees to indemnify and save harmless the County of Gila, its officers, agents and employees, and any jurisdiction or agency issuing permits for any work included in the project, their officers, agents and employees, hereinafter referred to as indemnitee, from all suits and claims, including attorney's fees and cost of litigation, actions, loss, damage, expense, cost or claims of any character or any nature arising out of the work done in fulfillment of the terms of this Contract or on account of any act, claim or amount arising or recovered under workers' compensation law or arising out of the failure of the Supplier to conform to any statutes, ordinances, regulation, law or court decree. It is agreed that the Supplier will be responsible for primary loss investigation, defense and judgment costs where this contract of indemnity applies. In consideration of the award of this contract, the Supplier agrees to waive all rights of subrogation against the County, its officers, officials, agents and employees for losses arising from the work performed by the Supplier for the County.

### INSURANCE REQUIREMENTS:

Supplier and subcontractors shall procure and maintain until all of their obligations have been discharged, including any warranty periods under this Contract are satisfied, insurance against claims for injury to persons or damage to property which may arise from or in connection with the performance of the work hereunder by the Supplier, his agents, representatives, employees or subcontractors.

The insurance requirements herein are minimum requirements for this Contract and in no way limit the indemnity covenants contained in this Contract.

The County in no way warrants that the minimum limits contained herein are sufficient to protect the Supplier from liabilities that might arise out of the performance of the work under this Contract by the Supplier, his agents, representatives, employees, or subcontractors. Supplier is free to purchase such additional insurance as may be determined necessary.

A. **MINIMUM SCOPE AND LIMITS OF INSURANCE** - Supplier shall provide coverage with limits of liability not less than those stated below:

1. **Commercial General Liability – Occurrence Form**

   Policy shall include bodily injury, property damage, broad form contractual liability and XCU coverage.

*Insurance Provisions continued.....*

- General Aggregate $2,000,000
- Products – Completed Operations Aggregate $1,000,000
- Personal and Advertising Injury $1,000,000
- Each Occurrence $1,000,000

a. The policy shall be endorsed to include the following additional insured language: **"The County of Gila shall be named as an additional insured with respect to liability arising out of the activities performed by, or on behalf of the Supplier".**

2. **Automobile Liability**

Bodily injury and property damage for any owned, hired, and non-owned vehicles used in the performance of this Contract.

Combined Single Limit (CSL) $1,000,000

a. The policy shall be endorsed to include the following additional insured language: **"The County of Gila shall be named as an additional insured with respect to liability arising out of the activities performed by, or on behalf of the Supplier, including automobiles owned, leased, hired or borrowed by the Supplier".**

3. **Worker's Compensation and Employers' Liability**

| | |
|---|---|
| Workers' Compensation | Statutory |
| Employers' Liability | |
| Each Accident | $100,000 |
| Disease – Each Employee | $100,000 |
| Disease – Policy Limit | $500,000 |

a. Policy shall contain a **waiver of subrogation** against the County of Gila.

4. **Builders' Risk Insurance or Installation Floater** $_____

In an amount equal to the initial Contract Amount plus additional coverage equal to Contract Amount for all subsequent change orders.

a. The County of Gila, the Supplier, subcontractors, engineer and engineer's consultant and any others with an insurable interest in the work shall be **Insured's** on the policy.

*Insurance Provisions continued.....*

b. Coverage shall be written on an all risk, replacement cost basis and **shall include coverage for soft costs, flood and earth movement.**

c. Policy shall be maintained until whichever of the following shall first occur: (1) final payment has been made; or, (2) until no person or entity, other than the County of Gila, has an insurable interest in the property required to be covered.

d. Policy shall be endorsed such that the insurance shall not be canceled or lapse because of any partial use or occupancy by the County.

e. Policy must provide coverage from the time any covered property becomes the responsibility of the Supplier, and continue without interruption during construction, renovation, or installation, including any time during which the covered property is being transported to the construction installation site, or awaiting installation, whether on or off site.

f. Policy shall contain a **waiver of subrogation** against the County of Gila.

g. Supplier is responsible for the payment of all policy deductibles.

B. **ADDITIONAL INSURANCE REQUIREMENTS:** The policies shall include, or be endorsed to include, the following provisions:

1. On insurance policies where the County of Gila is named as an additional insured, the County of Gila shall be an additional insured to the full limits of liability purchased by the Supplier even if those limits of liability are in excess of those required by this Contract.
2. The Supplier's insurance coverage shall be primary insurance and non-contributory with respect to all other available sources.
3. Coverage provided by the Supplier shall not be limited to the liability assumed under the indemnification provisions of this Contract.

C. **NOTICE OF CANCELLATION:** Each insurance policy required by the insurance provisions of this Contract shall provide the required coverage and shall not be suspended, voided, canceled, reduced in coverage or endorsed to lower limits except after thirty (30) days prior written notice has been given to the County. Such notice shall be sent directly to Steve Stratton, 1400 E. Ash St., Globe, AZ 85501 and shall be sent by certified mail, return receipt requested.

*Insurance Provisions continued.....*

D. **ACCEPTABILITY OF INSURERS:** Insurance is to be placed with insurers duly licensed or approved unlicensed companies in the state of Arizona and with an "A.M. Best" rating of not less than B+ VI. The County in no way warrants that the above-required minimum insurer rating is sufficient to protect the Supplier from potential insurer insolvency.

E. **VERIFICATION OF COVERAGE:** Supplier shall furnish the County with certificates of insurance (ACORD form or equivalent approved by the County) as required by this Contract. The certificates for each insurance policy are to be signed by a person authorized by that insurer to bind coverage on its behalf.

All certificates and endorsements are to be received and approved by the County before work commences. Each insurance policy required by this Contract must be in effect at or prior to commencement of work under this Contract and remain in effect for the duration of the project. Failure to maintain the insurance policies as required by this Contract or to provide evidence of renewal is a material breach of contract.

All certificates required by this Contract shall be sent directly to Steve Stratton, 1400 E. Ash St., Globe, AZ 85501. The County project/contract number and project description shall be noted on the certificate of insurance. The County reserves the right to require complete, certified copies of all insurance policies required by this Contract at any time.

F. **SUBCONTRACTORS:** Suppliers' certificate(s) shall include all subcontractors as additional insured's under its policies **or** Supplier shall furnish to the County separate certificates and endorsements for each subcontractor. All coverage's for subcontractors shall be subject to the minimum requirements identified above.

G. **APPROVAL:** Any modification or variation from the insurance requirements in this Contract shall be made by the County Attorney, whose decision shall be final. Such action will not require a formal Contract amendment, but may be made by administrative action.

## QUALIFICATION AND CERTIFICATION FORMS

### Exhibit "D" Suppliers Qualifications and Reference List

**Purpose**

This exhibit shall serve as a requirement to enable the evaluation team to assess the qualifications of Suppliers under consideration for final award.

The information may or may not be a determining factor in award.

**SECTION 6.0**

**Contract Number 050709-1 Chips, AB, and Asphalt**

The applicant submitting this Proposal warrants the following:

6.1 Name, Address, and Telephone Number of Principal Supplier:

SOUTHWEST ASPHALT
1302 W. DRIVERS WAY
TEMPE, AZ 85284

6.2 Had Supplier (under its present or any previous name) ever failed to complete a contract? _____Yes __X__No. If "Yes, give details, including the date, the contracting agency, and the reasons Supplier failed to perform in the narrative part of this Contract.

6.3 Has Supplier (under its present or any previous name) ever been disbarred or prohibited from competing for a contract? _____Yes __X__No. If "Yes", give details, including the date, the contracting agency, the reasons for the Suppliers disqualification, and whether this disqualification remains in effect in the narrative part of this Contract.

6.4 Has a contracting agency ever terminated a contract for cause with Supplier (under your firm's present or any previous name)? _____Yes __X__No. If "Yes", give details including the date, the contracting agency, and the reasons Supplier was terminated in the narrative part of this Contract.

*Qualification & Certification continued.....*

6.5 Supplier must also provide at least the following information:

a. A brief history of the Suppliers Firm.

b. A Cost Proposal shall be submitted on the Price Sheet, attached hereon and made a full part of this contract by this reference.

c. A list of previous and current customers, which are considered identical or similar to the Scope of Work described herein; shall be submitted on the Reference List, attached hereon and made a full part of this contract by this reference.

d. List the specific qualifications the Supplier has in supplying the specified services.

e. A list of any subcontractors (if applicable) to be used in performing the service must accompany the Proposal. For each subcontractor proposed, this form must be completed in its entirety and **three (3) copies (one (1) original and two copies with original signatures)** included in the Proposal package.

f. Gila County reserves the right to request additional information.

**6.6 Supplier Experience Modifier (e-mod) Rating:** .88

A method the National Council on Compensation Insurance (NCCI) uses to measure a business' computed loss ratio and determine a factor, which when multiplied by premium, can reward policyholders with lower losses. E-mod rate may be a determining factor in bid award.

**6.7 Current Arizona Supplier License Number:** N/A

**Signature of Authorized Representative**

GREG GRONEBERG

**Printed Name**

SALES MANAGER

**Title**

## PRICE SHEET

Provide the total price proposed on this form. Attach any pertinent cost breakdowns, sub-totals of component cost, etc. to this proposal-pricing page.

| Product Description | FOB Plant *Price Per Ton | Delivered 1400 E. Ash St., Globe, AZ *Price Per Ton |
|---|---|---|
| 1/2" Chips (12.7 mm) ADOT Spec. | $ 9.50 | $ 19.50 |
| 3/8" Chips (9.5 mm) ADOT Spec. | $ 9.50 | $ 19.50 |
| A.B.C. (ADOT Class 2) | $ 5.50 | $ 15.50 |
| 3/8" Asphalt (9.5 mm) MAG Spec. | $ 49.– | $ 63.– |
| 3/4" Asphalt (19.0 mm) MAG Spec. / 4/12 A.R.O.T. | $ 45.– | $ 59.– |

EEMEX

**Cost per mile for delivery to other Gila County Locations:** $ .18 (Ton mile)

Minimum 5- Dry Products 45 - ASPHALT Ton for pick up FOB plant

Amount $ 50– each occurrence for product returned and disposed.

For product specifications, see Section 6.0, pages 18 and 19. Pricing shall be F.O.B. plant.

* Price to Include All Applicable Taxes and Required Fees. No Tax shall be levied against Labor.

## REFERENCE LIST

These references are required to enable the evaluation team to assess the qualifications of the Suppliers under consideration for final award.

The information may or may not be a determining factor in award.

**References**

List at least four customers for whom you have provided service of a similar scope as this Request or Proposal during the past twelve months, in or as close to Gila county as possible.

| CUSTOMER NAME AND ADDRESS | TELEPHONE | PRIMARY CONTACT |
|---|---|---|
| SEE FOLLOWING PAGE | | |

Signature of Authorized Representative

GREG GRUNESEN

Printed Name

SALES Manager

Title

## AFFIDAVIT BY SUPPLIER
## CERTIFYING THAT THERE WAS NO COLLUSION
## IN BIDDING FOR CONTRACT

STATE OF ARIZONA )
)ss
COUNTY OF: GILA )

GREG GRANEBERG
(Name of Individual)

being first duly sworn, deposes and says:

That he is SALES Manager
(Title)

Of SOUTHWEST ASPHALT and
(Name of Business)

That he is properly pre-qualified by Gila County for bidding on BID NO. 050709-1 and,

That pursuant to Section 112 (C) of Title 23 USC, he certifies as follows:

That neither he nor anyone associated with the said

SOUTHWEST Asphalt
(Name of Business)

has, directly or indirectly entered into any agreement, participated in any collusion or otherwise taken any action in restraint of free competitive bidding in connection with the above mentioned project.

SOUTHWEST Asphalt
Name of Business

By

SALES Manager
Title

Subscribed and sworn to before me this 17 day of June, 2009.

Mindy Olson
Notary Public

My Commission expires: 12/28/2009

Mindy Olson
Notary Public - Arizona
Maricopa County
My Commission Expires
December 28, 2009

## CERTIFICATION: INTENTIONS CONCERNING SUBCONTRACTING

At the time of the submission of **Request for Proposals No. 050709-1 Chips, AB & Asphalt,** my intention concerning subcontracting a portion of the work is as indicated below.

In indicating that it is my intention to subcontract a portion of the work, this will acknowledge that such subcontractors will be identified and approved by the County prior to award of contract; and that documentation, such as copies of letters, requests for quotations, etc., substantiating the actions taken and the responses to such actions is on file and available for review.

- [x] YES, it is my intention to subcontract a portion of the work.
- [ ] NO, it is not my intention to subcontract a portion of the work.

Southwest Asphalt
**Name of Business**

**Signature of Authorized Representative**

Sales Manager
**Title**

6/15/09
**Date**

## ANTI-TERRORISM WARRANTY

Pursuant to A.R.S. §35-397 the Supplier certifies that it does not have scrutinized business operations in Iran or Sudan and that each is in compliance with the Export Administration Act and not on the Excluded Parties List.

Signature of Authorized Representative

GREG GRONEGENE

Printed Name

SALES MANAGER

Title

## LEGAL ARIZONA WORKERS ACT COMPLIANCE

Supplier hereby warrants that it will at all times during the term of this Contract comply with all federal immigration laws applicable to Supplier's employment of its employees, and with the requirements of A.R.S. § 23-214 (A) (together the "State and Federal Immigration Laws"). Supplier shall further ensure that each subcontractor who performs any work for Supplier under this contract likewise complies with the State and Federal Immigration Laws.

County shall have the right at any time to inspect the books and records of Supplier and any subcontractor in order to verify such party's compliance with the State and Federal Immigration Laws.

Any breach of Supplier's or any subcontractor's warranty of compliance with the State and Federal Immigration Laws, or of any other provision of this section, shall be deemed to be a material breach of this Contract subjecting Supplier to penalties up to and including suspension or termination of this Contract. If the breach is by a subcontractor, and the subcontract is suspended or terminated as a result, Supplier shall be required to take such steps as may be necessary to either self-perform the services that would have been provided under the subcontract or retain a replacement subcontractor, (subject to County approval if MWBE preferences apply) as soon as possible so as not to delay project completion.

Supplier shall advise each subcontractor of County's rights, and the subcontractor's obligations, under this Article by including a provision in each subcontract substantially in the following form:
"Subcontractor hereby warrants that it will at all times during the term of this contract comply with all federal immigration laws applicable to Subcontractor's employees, and with the requirements of A.R.S. § 23-214 (A). Subcontractor further agrees that County may inspect the Subcontractor's books and records to insure that Subcontractor is in compliance with these requirements. Any breach of this paragraph by Subcontractor will be deemed to be a material breach of this contract subjecting Subcontractor to penalties up to and including suspension or termination of this contract."

Any additional costs attributable directly or indirectly to remedial action under this Article shall be the responsibility of Supplier. In the event that remedial action under this Article results in delay to one or more tasks on the critical path of Supplier's approved construction or critical milestones schedule, such period of delay shall be deemed excusable delay for which Supplier shall be entitled to an extension of time, but not costs.

**Signature of Authorized Representative**

GREG GRONEMENT
**Printed Name**

SALES MANAGER
**Title**

## SUPPLIERS CHECKLIST

NOTICE IS HEREBY GIVEN that all Proposal Documents shall be completed and/or executed and submitted with this proposal. If supplier fails to complete and/or execute any portion of the Proposal Documents, this bid will be determined to be "non-responsive" and rejected.

### CHECKLIST

| REQUIRED DOCUMENT | COMPLETED/EXECUTED |
|---|---|
| QUALIFICATION & CERTIFICATION FORM | X |
| REFERENCE LIST | X |
| PRICE SHEET | X |
| AFFIDAVIT OF NON-COLLUSION | X |
| INTENTIONS CONCERNING SUBCONTRACTING | X |
| SCRUTINIZED OPERATIONS | X |
| LEGAL AZ WORKERS ACK COMPLIANCE | X |
| OFFER PAGE | X |

---

**ACKNOWLEDGMENT OF RECEIPT OF ADDENDA:**

| | #1 | #2 | #3 | #4 | #5 |
|---|---|---|---|---|---|
| Initials/ Date | | | | | |

Signed and dated this 17th day of June, 2009.

SUPPLIER: Southwest Asphalt

BY: [signature]

Each proposal shall be sealed in an envelope addressed to Gila County Public Works Division and bearing the following statement on the outside of the envelope: Proposal to Supply: **CHIPS, AB, & ASHPALT, Gila County Arizona, Bid Proposal No. 050709-1.** All proposals shall be filed at **Gila County Public Works Division, 1400 E. Ash St., Globe, AZ 85501**, on or before **2:00 AM/MST, Thursday, June 18, 2009.**

## OFFER PAGE

**To Gila County**

The undersigned hereby offers and agrees to furnish the material or services in compliance with all terms and conditions, instructions, specifications, and any amendments contained in this Request for Proposals document.

Signature also certifies the Suppliers Bid Proposal is genuine, and is not in any way collusive or a sham; that the Bid Proposal is not made with the intent to restrict or prohibit competition; that the Supplier submitting the proposal has not revealed the contents of the proposal to, or in any way colluded with, any other supplier which may compete for the contract; and that no other Supplier which may compete for the contract has reveled the contents of a proposal to, or in any way colluded with, the supplier submitting this proposal.

**Contract Number: 050709-1 Chips, AB, & Asphalt**

**Supplier Submitting Proposal:**

Southwest Asphalt
**Company Name**

1302 W. Drevens Way
**Address**

Tempe AZ 85284
**City State Zip**

**For Clarification of this offer, contact:**

**Name:** Greg Gronenberg

**Phone No.:** 602-540-8487

**Fax No.:** 480-730-1264

**Email:** GGronenberg@fishenind.com

**Signature of Authorized Representative**

Greg Gronenberg
**Printed Name**

Sales
**Title**

Proposal must be signed by a duly authorized officer(s) eligible to sign contract documents for the Supplier.

*Offer Page continued.....*

The offer is hereby accepted.

The Supplier Southwest Asphalt is now bound to provide the materials or services listed in RFP Number 050709-1, including all terms and conditions, specifications, amendments, etc. and the Supplier's Offer as accepted by County/public entity.

The Supplier has been cautioned not to commence any billable work or to provide any material or service under this contract until Supplier receives this signed sheet, or written notice to proceed.

GILA COUNTY BOARD OF SUPERVISORS;

Awarded this ~~18th~~ 17th day of August, 2009

Shirley L. Dawson, Chairman, Board of Supervisors

ATTEST;

Steven L. Besich, Clerk of the Board / County Manager

APPROVED AS TO FORM;

Bryan Chambers, Chief Deputy County Attorney
*for* Daisy Flores, County Attorney

*Offer Page continued.....*

The offer is hereby accepted.

The Supplier Southwest Asphalt is now bound to provide the materials or services listed in RFP Number 050709-1, including all terms and conditions, specifications, amendments, etc. and the Supplier's Offer as accepted by County/public entity.

The Supplier has been cautioned not to commence any billable work or to provide any material or service under this contract until Supplier receives this signed sheet, or written notice to proceed.

GILA COUNTY BOARD OF SUPERVISORS;

Awarded this ~~18th~~ 17th day of August, 2009

Shirley L. Dawson

Shirley L. Dawson, Chairman, Board of Supervisors

ATTEST;

for Marion Sheppard Chief Deputy Clerk

Steven L. Besich, Clerk of the Board / County Manager

APPROVED AS TO FORM;

Bryan Chambers, Chief Deputy County Attorney
*for* Daisy Flores, County Attorney

# GILA COUNTY ATTORNEY

*Daisy Flores*

Re: County Attorney's Office "approval as to form" of contract or agreement.

To whom it may concern:

The County Attorney's Office has reviewed the contract or agreement attached to this agenda item and has determined that it is in its proper form and is within the powers and authority granted under the laws of this state to the public agency requesting the County Attorney's Office review.

## Explanation of the Gila County Attorney's Office "Approval as to Form" Review

The Gila County Attorney's Office is often called upon to review contracts and other agreements between public entities represented by the County Attorney and private venders, contractors, and individuals.

In performing this review, the County Attorney's Office reviews these contracts to see that they are in "proper form" prior to their execution. "Proper form" means that the contract conforms to fundamental contract law, conforms to specific legislative requirements, and is within the powers and authority granted to the public agency. It does not mean that the County Attorney's Office approves of or supports the policy objectives contained in the contract. That approval is solely the province of the public agency through its elected body.

The public agency or department submitting the contract for review has the responsibility to read and understand the contract in order to completely understand its obligations under the contract if it is ultimately approved by the public entity's board. This is because while the County Attorney's Office can approve the contract as to form, the office may not have any idea whether the public agency has the capacity to actually comply with its contractual obligations. Also, the County Attorney's Office does not monitor contract compliance. Hence the public entity or

submitting department will need to be prepared to monitor their own compliance. A thorough knowledge of the provisions of the contract will be necessary to monitor compliance.

Before signing a contract "approved as to form," the County Attorney's Office will answer any questions or concerns the public agency has about the contract. It is the responsibility of the public agency or department submitting the contract for review to ask any specific questions or address any concerns it has about the contract to the County Attorney's Office at the same time they submit the contract for review. Making such an inquiry also helps improve the County Attorney's Office review of the contract because it will help focus the review on specific issues that are of greatest concern to the public agency. Failing to make such an inquiry when the agency does have issues or concerns will decrease the ability of the County Attorney's Office to meaningfully review the agreement.

**ARF-1013** **Consent Agenda Item 5- E**

**Regular BOS Meeting**

**Meeting Date:** 01/10/2012

| | | | |
|---|---|---|---|
| Submitted For: | Steve Stratton, Public Works Division Director | Submitted By: | Valrie Bejarano, Contracts Support Specialist, Finance Department |
| Department: | Public Works Division | Division: | Roads |
| Fiscal Year: | FY 2011-2012 | Budgeted?: | Yes |
| Contract Dates Begin & End: | 12-17-11 to 12-16-12 | Grant?: | No |
| Matching Requirement?: | No | Fund?: | Renewal |
| Presenter's Name: | | | |

---

Information

Request/Subject

Amendment No. 2 to Contract 050709-1 with CEMEX for 3/8" Chips and ABC in the Copper Region

Background Information

Effective August 17, 2009, Gila County and CEMEX entered into a contract whereby the contractor agreed to provide 3/8" chips and ABC (asphalt base concrete) to various locations in the Copper Region of Gila County.

Evaluation

Per Section 2.2 of the contract the County shall have the right to renew the Contract for two additional one year periods.
On January 4, 2011, Amendment No. 1 was approved by the Board to extend the contract to December 16, 2011.
Amendment No. 2 will extend the contract for its final one year term from December 17, 2011, to December 16, 2012.
All terms, conditions and provisions of the original contract shall remain the same and apply during the renewal period.

Conclusion

The Consolidated Roads Department requires 3/8" chips and ABC in order to maintain roads in Gila County. Extending contract 050709-1 with CEMEX would provide these products for the Copper Region for one more year.

Recommendation

The Public Works Director recommends that the Board of Supervisors approve amendment No. 2 to contract 050709-1 to extend the contract term for one year for 3/8" chips and ABC.

Suggested Motion

Authorization of the Chairman's signature on Amendment No. 2 to Contract 050709-1 between Gila County and CEMEX whereby the contractor will continue to provide 1/8" Chips and ABC for repair and maintenance of Gila County Copper Region roads from December 17, 2011, to December 16, 2012.

---

Attachments

Original Contract 050709-1 CEMEX
Amendment No. 2 to Contract 050709-1 CEMEX
Amendment No. 1 to Contract 050709-1 CEMEX
Legal explanation

# CHIPS, AB, & ASPHALT

## BID NO. 050709-1

## BIDDER'S INFORMATION
## CONTRACT DOCUMENTS AND SPECIFICATIONS

***BOARD OF SUPERVISORS***
**Shirley L. Dawson, Chairman**
**Tommie C. Martin, Vice Chairman**
**Michael A. Pastor, Member**

***County Manager / Clerk of the Board***
**Steven L. Besich**

***Public Works Director***
**Steve Stratton**

## TABLE OF CONTENTS

**Content** **Page**


**Table of Contents** ..... **1**
**Advertisement** ..... **2**
**Scope of Work** ..... **3**

**Exhibit "A"; Instructions to Suppliers** ..... **4-7**
Preparation of Sealed Proposal ..... 4
Amendments ..... 5
Inquires ..... 5
Late Proposal ..... 6
Submittal Proposal Format ..... 6

**General Terms and Conditions** ..... **8-9**
Acceptance Contract/Agreement ..... 8
Protests ..... 9
Laws & Ordinances ..... 9

**Exhibit "B" Contract Award Agreement** ..... **9-13**
Overcharges by antitrust Violations ..... 10
Authority to Contract ..... 10
Contract Amendments ..... 10
Contract Default ..... 11
Right of Assurance ..... 11
Co-op Intergovernmental Purchasing Agreement ..... 11
Cancellation of County Contracts ..... 11
Termination of Contract ..... 12
Proposal Evaluation Process ..... 13

**Exhibit "C", Minimum Product Specifications/Information** ..... **14-19**
Section 1.0; General Purpose ..... 14
Section 2.0; Proposal Pricing ..... 15
Section 3.0; Price Adjustments ..... 15
Section 4.0; Ordering / Pricing ..... 16
Section 5.0; Product Specifications ..... 18

**Insurance Provisions** ..... **20-23**
Indemnification Clause ..... 20
Insurance Requirements ..... 20
Commercial General Liability – Occurrence Form ..... 20
Automobile Liability Insurance ..... 21
Worker's Compensation and Employee's Liability ..... 21
Builders' Risk Insurance or Installation Floater ..... 21
Additional Insurance Requirements ..... 22
Notice of Cancellation ..... 22
Acceptability of Insurers ..... 23
Verification of Coverage ..... 23
Subcontractors ..... 23
Approval ..... 23

**Qualification and Certification Forms** ..... **24-25**
**Proposal Price Sheet** ..... **26**
**Reference List** ..... **27**
**No Collusion in Bidding** ..... **28**
**Intentions Concerning Subcontracting** ..... **29**
**Anti-Terrorism Warranty** ..... **30**
**Legal Arizona Workers Act Compliance** ..... **31**
**Check List & Addenda Acknowledgment** ..... **32**
**Offer Page (Signature Required)** ..... **33-34**

**GILA COUNTY**
**REQUEST FOR PROPOSALS**
**BID NO. 050709-1 CHIPS, AB & ASPHALT**

**Notice is hereby given that Gila County is requesting proposals from qualified Supplier(s) to provide Chips, AB, & Asphalt as specified for the Gila County Public Works Division.**

**SUBMITTAL DUE DATE:** **2:00 P.M., Local AZ Time, Thursday, June ~~11~~ 18 2007**

**RETURN PROPOSAL TO:** **GILA COUNTY PUBLIC WORKS**
**GUERRERO COMPLEX**
**1400 EAST ASH STREET**
**GLOBE, ARIZONA**

**NOTICE IS HEREBY GIVEN,** that sealed competitive Proposals for the material or services as specified will be received by the Gila County Public Works Division, until the time and date cited.

Proposals received by the correct time and date will be publicly opened and recorded thereafter in the Public Works Guerrero Conference Room or other site, which may be designated. Any proposal received later than the date and time specified above will be returned unopened. **Late proposals shall not be considered.** The prevailing time shall be the atomic clock in the reception area of the Guerrero Complex building.

Interested suppliers may obtain a copy of this solicitation by calling the Gila County Public Works Division at 928-402-8612 and are strongly encouraged to carefully read the entire Request for Proposal.

Questions regarding the technical aspects of this Request for Sealed Proposal should be directed to, Brent Cline, Consolidated Roads Manager, ( 928)402-8526

Questions regarding the general terms and conditions of this Request for Sealed Proposals and Professional Services Contract should be directed to, Valrie Bejarano, (928)402-8612.

The Board of Supervisors reserves the right to reject any or all proposals, or to accept any proposals, or to waive any informality in any proposal, or to withhold the award if deemed in the best interest of Gila County. All procurement activities conducted by Gila County are in conformance with the rules and regulations of the Gila County procurement code. A copy of the Code is available for review in the office of the Clerk of the Board, Gila County Courthouse, 1400 E. Ash St., Globe, AZ.

**Arizona Silver Belt Advertisement Dates:** **~~May 27~~ June 3 and June ~~3~~ 10, 2009**

Signed: _____ Date: 5 / 13 / 2009
Bryan B. Chambers, Chief Deputy County Attorney
*for* Daisy Flores, County Attorney

Signed: _____ Deputy Clerk Date: 6 / 2 / 09
FOR Steven L. Besich, County Manager / Clerk of the Board

## GENERAL SCOPE OF WORK

It is the intent of this Request for Proposals to establish a contract for a supplier(s) to furnish Chips, AB, and Asphalt to the Public Works Division at various locations for the Copper and Timber Regions of Gila County.

All specifications, and terms and conditions, under the Contract includes furnishing at least, but not limited to, minimum specification of product specifications (see attached: Exhibit "C") Pages 14 through 19 and Price Sheet page 26.

The County may choose to award this Request for Proposals to one or more supplier(s) depending on what is deemed to be in the best interest of Gila County.

## INSTRUCTIONS TO SUPPLIERS

**IMPORTANT: EXHIBIT "A", INSTRUCTIONS TO SUPPLIERS AND EXHIBIT "B", SUPPLIERS AWARD AGREEMENT ARE BASIC CONTENT TO GILA COUNTY BID PACKAGES. INDIVIDUAL PROPOSALS MAY REQUIRE DIFFERENT LANGUAGE FOR INSTRUCTIONS AND AWARD AGREEMENTS. WHERE APPLICABLE, SUCH CHANGES WILL APPEAR IN EXHIBIT "C", MINIMUM PRODUCT SPECIFICATIONS AND INFORMATION AND TAKE PRECEDENCE OVER THE LANGUAGE APPEARING IN EXHIBITS "A" & "B".**

**EXHIBIT "A" INSTRUCTIONS TO SUPPLIERS**

**Preparation of Sealed Proposals**

A. Sealed Proposals will be received by the County of Gila Public Works Division, from individuals and suppliers to deliver the product(s), goods and services contained to establish a contract for specified locations within Gila County. The County seeks sealed proposals only from qualified, experienced suppliers able to provide service which is, in all respects, responsive to the specifications. All proposals shall be on the forms provided in this Request for Proposal's package. It is permissible to copy these forms if required.

B. Before submitting its Proposal and Qualification Forms each Supplier shall familiarize itself with the Scope of Work, and laws, regulations and other factors affecting performance of work. It shall carefully correlate its observations with requirements of the Contract and otherwise satisfy itself of the expense and difficulties attending the performance of the work. The submission of a proposal will constitute a representation of compliance by the supplier. The submission of a proposal will constitute a representation of compliance by the supplier. There will be no subsequent financial adjustment, other than that provided for by the Contract, for lack of such familiarization.

C. Suppliers must complete the Proposal and Qualification Forms provided in this Request for Proposals package in full, original signature in ink, by the person(s) authorized to sign the proposal and to be submitted at the time of Proposal opening, and made a part of this contract. The County will use the Proposal and Qualification Form in evaluating the capacity of suppliers to perform the Scope of Services as set forth in the Contract. Failure of any supplier to complete and submit the Price Sheet and Signature/Offer Page at time and place of opening shall be grounds for automatic disqualification of supplier(s) from further consideration.

*Instructions to Suppliers continued.....*

D. The names of all persons authorized to sign the proposal must also be legibly printed below the signature. Evidence of the authority of the person signing shall be furnished.

E. The full name of each person or company interested in the RFP shall be listed on the proposal.

F. No alterations in Proposals, or in the printed forms therefore, by erasures, interpolations, or otherwise will be acceptable unless each such alteration is signed or initialed by the supplier; if initialed, the County may require the supplier to identify any alteration so initialed.

## Amendments

Any addendum issued as a result of any change in this Request for Proposals must be acknowledged by all suppliers in the following manner:

1. Completion of the Supplier Checklist and Acknowledgment of Addenda Form on page 32 (the numbers of which shall be filled in on the Proposal Form).
2. Copies of all addenda must be attached to the submittal.

Failure to indicate receipt of addenda in one of the above manners may result in a proposal being rejected as non-responsive.

## Inquires

A. Any questions related to this Request for Proposals must be directed to those whose names appear on the Notice. Questions should be submitted in writing when time permits. The Gila County Supervisors, at their sole discretion, may require all questions be submitted in writing. Any correspondence related to the Request for Proposals should refer to the appropriate Request for Proposals number, page, and paragraph number. However, the suppliers(s) must not place the Request for Proposals number on the outside of an envelope containing questions since such an envelope may be identified as a Sealed Proposal and may not be opened until after the official Request for Proposals due date and time. Questions received less than three (3) working days prior to the date for opening Proposals will be answered only if time permits. Only questions answered by formal written addenda will be binding. Oral and other interpretations or clarifications will be without legal effect.

*Instructions to Suppliers continued.....*

B. Proposal results ARE NOT provided in response to telephone inquires. A tabulation of proposals received is on file in the Gila County Board of Supervisors and Procurement offices and available for review after contract award.

**Late Proposals**

Any Proposal received later than the date and time specified on notice for Sealed Proposal will be returned unopened. Late Proposals shall not be considered. Any supplier submitting a late Proposal shall be so notified.

**Submittal Proposal Format:**

**It is requested that One (1) Original and Two (2) copies ( 3 TOTAL) with original signatures on all three (3) of the Proposal and Qualification Forms, Reference List, Price Sheet, and Offer Page shall be submitted on the forms and in the format specified in the Request for Proposal.** The County will not be liable for any cost incident to the preparation of Proposals, materials, reproductions, presentations, copy-right infringements, etc. It is permissible to copy these forms if required. Facsimiles or mailgrams shall not be considered.

1. By signature in the offer section of the Offer and Acceptance page, supplier certifies:

   A. The submission of the offer did not involve collusion or other anti-competitive practices.

   B. The supplier has not given, offered to give, nor intends to give at any time hereafter, any economic opportunity, future employment, gift, loan, gratuity, special discount, trip, favor, or service to a public servant in connection with the submitted offer.

   C. In order to conserve resources, reduce procurement costs, improve timely acquisition and cost of supplies and to improve efficiency and economy of procurement, any political subdivision, Stated, County, City, Town, etc., of the State of Arizona, will be allowed by supplier awarded the contract to purchase the same products, goods and services, at the same prices stated in the Proposal. Delivery charges may differentiate depending on geographical location.

*Instructions to Suppliers continued.....*

2. Proposals submitted early may be modified or withdrawn by notice to the party receiving proposals at the place and prior to the time designated for receipts of Proposals.

3. The County is not responsible for any supplier's errors or omissions. Negligence in preparing an offer confers no right to the supplier unless the supplier discovers and corrects such errors prior to the Proposal deadline.

**The Proposal shall be submitted in a sealed envelope, a *minimum of Three (3) copies with original signatures* shall be provided by the Supplier. The words "REQUEST FOR PROPOSAL" with Proposal Title "CHIPS, AB, & ASPHALT", Contract Number, "050709-1", Date "JUNE 18, 2009", and Time "2:00 PM/MST" of Proposal opening shall be written on the envelope. The Supplier shall assume full responsibility for timely delivery at the location designated in the Notice.**

## GENERAL TERMS AND CONDITIONS

### Award Contract

1. The Gila County Board of Supervisors reserves the right to award any Proposal by individual line item, by group of line items or as total, or any part thereof, whichever is deemed to be in the best interest, most advantageous of the County of Gila.

    a. Notwithstanding any or other provisions of the RFP, the County reserves the right to:

        1. Waive any immaterial defects or informalities; or
        2. Reject any or all Proposals; or portions thereof; or
        3. Reissue a Request for Proposal.

2. It is the responsibility of the Gila County Board of Supervisors to let the County contracts to the lowest responsive and responsible supplier(s). To ensure that all Suppliers are experienced, reasonably equipped and adequately financed to meet their contractual obligations, a determination of responsibility shall be made by the Gila County Board of Supervisors prior to contract award.

3. Further, the County reserves the right to reject the Proposal of any supplier(s) who has previously failed to perform adequately after having once been awarded a prior Proposal for furnishing and installing materials similar in nature.

4. All submitted forms provided in this Request for Proposals will be reviewed by the Gila County Board of Supervisors.

5. Those Supplier(s) who, in the opinion of the Gila County Board of Supervisors, are best qualified and whose Proposals are most advantageous of the County <u>may</u> be invited to appear before the Board for an oral review.

6. The apparent successful Supplier(s) shall sign and file with the County, within ten (10) days after Notice of Intent to Award, all documents necessary to successfully execute the contract.

*General Terms and Conditions continued.....*

## Protests

Only other Suppliers who have submitted a bid proposal have the right to protest. A protest of a proposed award or of an award must be filed within ten (10) days after the award by the Board of Supervisors. A protest must be in writing and must include the following:

A. Name, address and telephone number of the protester.
B. Signature of the protester or its representative, and evidence of authority to sign.
C. Identification of the contract and the solicitation or contract number.
D. Detailed statement of the legal and factual grounds of protest including copies of relevant documents.
E. The form of relief requested.

All protests shall be sent to the attention of the Gila County Board of Supervisors, 1400 East Ash Street, Globe, Arizona 85501.

## Laws and Ordinances

This agreement shall be enforced under the laws of the State of Arizona and Gila County. Supplier shall maintain in current status all Federal, State and Local licenses and permits required for the operation of the business conducted by the Supplier. The Supplier shall comply with the applicable provisions of the Americans with Disabilities Act (Public Law 101-336, 42 U.S.C. 12101-12213) and applicable federal regulations under the act.

## EXHIBIT "B" SUPPLIER AWARD AGREEMENT

This exhibit shall serve as an example of the contract agreement to any Supplier, their agents, subcontractors and/or representatives, awarded this or any portion of this contract by the County, by submitting Proposals to this or any other solicitation requiring sealed Proposals, does hereby agree to the following provisions. Proof of acceptance of these provisions will be the Supplier's signature(s) appearing on page 33, Suppliers OFFER PAGE, and Exhibit "D" Suppliers Qualification and Certification forms(s) pages 24-25.

*General Terms and Conditions continued.....*

## Overcharges by Antitrust Violations

The County maintains that, in actual practice, overcharges resulting from antitrust violations are borne by the purchaser. Therefore, to the extent permitted by law, the Supplier hereby assigns to the County any and all claims for such overcharges as to the goods or services used to fulfill the contract.

## Authority to Contract

This contract shall be based upon the Request for Proposal issued by the County and the offer submitted by the Supplier in response to the RFP. The offer shall substantially conform to the terms, conditions, specifications and other requirements set forth within the text of the RFP. The county reserves the right to clarify any contractual terms with the concurrence of the Supplier; however, any substantial non-conformity in the offer, as determined by the Gila County Attorney, shall be deemed non-responsive and the offer rejected. The contract shall contain the entire agreement between Gila County and the Supplier relating to these requirements and shall prevail over any and all previous agreements, contracts, proposals, negotiations, purchase orders, or master agreement in any form. The contract activity is issued under the authority of the Gila County Manager, after the Gila County Board of Supervisors approves the award. No alteration of any portion of the contract, any items or services awarded, or any other agreement that is based upon this contract may be made without express written approval of the Gila County Board of Supervisors in the form of an official contract amendment. Any attempt to alter any documents on the part of the Supplier or any agency is a violation of the County Procurement Code. Any such action is subject to the legal and contractual remedies available to the County inclusive, but not limited to, contract cancellation, suspension and/or debarment of the Supplier.

## Contract Amendments

The contract shall be modified only by a written contract amendment signed by the Gila County Board of Supervisors and persons duly authorized to enter into contracts on behalf of the Supplier.

*General Terms and Conditions continued.....*

## Contract Default

A. The County, by written notice of default to the Supplier, may terminate the whole or any part of this contract in any one of the following circumstances:

1. If the Supplier fails to make delivery of the supplies or to perform the services within the times specified; or
2. If the Supplier fails to perform any of the other provisions of this contract; and fails to remedy the situation within a period of ten (10) days after receipt of notice.

B. In the event the County terminates this contract in whole or part, the County may procure supplies or services similar to those terminated, and the Supplier shall be liable to the County for any excess costs for such similar supplies or services.

## Right to Assurance

Whenever one party to this contract in good faith has reason to question the other party's intent to perform, the other party may demand that the other party give a written assurance of this intent to perform. In the event that a demand is made and no written assurance is given within five (5) days, the demanding party may treat this failure as an anticipatory repudiation of this contract.

## Co-op Use of Contract – Intergovernmental Purchasing

Gila County has entered into an active purchasing agreement with other political subdivisions, cities, and towns of the State of Arizona in order to conserve resources, reduce procurement costs and improve timely acquisition and cost of supplies, equipment and services. The Supplier(s) to whom this contract is awarded may be requested by other parties of said interactive purchasing agreements to extend to those parties the right to purchase supplies, equipment and services provided by the Supplier under this contract, pursuant to the terms and conditions stated herein. Any such usage by other entities must be in accord with the rules and regulations of the respective entity and the approval of the Supplier.

## Cancellation of County Contracts

This contract is subject to the cancellation provisions of **A.R.S. §38-511.**

*General Terms and Conditions continued.....*

## Termination of Contract

The County, with or without cause, may terminate this contract at any time by mutual written consent, or by giving **thirty (30)** days written notice to you. The County at its convenience, by written notice, may terminate this contract, in whole or in part. If this contract is terminated, the County shall be liable only for payment under the payment provisions of this contract for the services rendered and accepted material received by the County before the effective date of termination.

The County reserves the right to cancel the whole or any part of this contract due to failure of Supplier(s) to carry out any term, promise, or condition of the contract. The County will issue a written ten (10) day notice of default to Supplier(s) for acting or failing to act as in any of the following:

1. In the opinion of the County, Supplier fails to perform adequately the stipulations, conditions or services/specifications required in the contract.
2. In the opinion of the County, Supplier attempts to impose on the County material products, or workmanship, which is of unacceptable quality.
3. Supplier fails to furnish the required service and/or product within the time stipulated in the contract.
4. In the opinion of the County, Supplier fails to make progress in the performance of the requirements of the contract and/or give the County a positive indication that Supplier will not or cannot perform to the requirements of the contract.

Each payment obligation of the County created hereby is conditioned upon the availability of County, State and Federal funds, which are appropriated or allocated for the payment of such an obligation. If funds are not allocated by the County and available for the continuance of service herein contemplated, the contract period for the service may be terminated by the County at the end of the period for which funds are available. The County shall notify the Supplier at the earliest possible time which service may be affected by a shortage of funds. No penalty shall accrue to the County in the event this provision is exercised, and the County shall not be obligated or liable for any future payments due or for any damages as a result of termination under this paragraph.

*General Terms and Conditions continued.....*

## Proposal Evaluation Process

**All proposals shall be evaluated by using the following criteria. The recommendation for contract award will be made to the responsible Supplier whose proposal is determined to be the most advantageous to Gila County when applying the weighted criteria: 50% price, 25% compliance with specifications, and 25% serviceability. The County reserves the right to award in whole or in part, by item or group of items, by section or geographic area, or make multiple awards, where such action serves the County's best interest.**

## General

After receipt of all proposals, each submittal shall be screened to determine if any shall be deemed non-responsive. Unsigned proposals, unacknowledged Addenda, incomplete proposals, non-conformance with mandatory requirements, etc., may result in the determination of non-responsive.

**Subsequent to the initial review, all remaining proposals shall be reviewed by the Gila County Public Works Fiscal Manager to evaluate the information submitted, perform tests when necessary and make comparisons in order to approve or reject the Request. If rejected, the purchasing department shall give written notice to the Supplier submitting this request.**

## MINIMUM SPECIFICATIONS -TERMS AND CONDITIONS

**Exhibit "C" Minimum Specifications – Product Specifications**

**Purpose**

It is the intent of Gila County to establish, by this Request for Proposals, the contract for a Supplier(s) to provide Chips, AB, and Asphalt.

| |
|---|
| This specification is intended to describe the type, size, and quality, which will best meet the demands of the using department. It is **NOT** intended to favor any one brand or make. The mention of brand names or components merely serves to specify the quality or general type required. |

**SECTION 1.0**

**General Purpose**

1.1 All product specifications are **minimum.** Supplier must provide product specification sheet. MSDS sheets must be included. Please provide MSDS sheets in MS Word Format or Adobe Acrobat on compact disc or print them.

1.2 Supplier(s) should have adequate manufacturing / stocking facilities to serve the needs of Gila County.

1.3 All Proposals must represent the entire package. Partial awards will not be made unless otherwise stated in the Proposal specifications.

1.4 The parties specifically understand and agree that the quantities used for bidding purposes are estimates of County needs and in no event shall the County be obligated to purchase the exact quantities of any item set forth in the Proposal. The County does not guarantee any maximum or minimum amounts of purchase.

1.5 Supplier shall review its Proposal submission to assure the following requirements are met.

1.5.1 One (1) original and two (2) copies with original signatures of all submissions is MANDATORY.

*Minimum Specifications continued.....*

1.5.2 Qualification and Certification Forms, (page 24 & 25)

1.5.3 Price Sheet, (page 26)

1.5.4 References, (page 27)

1.5.5 No Collusion in Bidding, (page 28)

1.5.6 Intentions for Subcontracting, (page 29)

1.5.7 Anti-Terrorism Warranty, (page 30)

1.5.8 Legal Arizona Workers Act Compliance, (page 31)

1.5.9 Checklist and Addenda Acknowledgment, (page 32)

1.5.10 Agreement page, MANDATORY (Attachment page 33-34)

## SECTION 2.0

### Proposal Pricing

2.1 The Supplier shall submit the Proposal in the form of a firm unit price for the product. Prices shall be in effect for the duration of the contract period at the unit prices bid, subject to the price adjustment in *Section 4.0.* Supplier shall incorporate all profit and discount into their price.

2.2 The term of the contract shall commence upon award and shall remain in effect for a period of sixteen (16) months unless terminated, canceled or extended as otherwise provided herein. The Supplier agrees that Gila County shall have the right, at its sole option, to renew the contract for two (2) additional one (1) year periods. In the event the County exercises such a right, all terms, conditions and provisions of the original contract shall remain the same and apply during the renewal period.

2.3 Suppliers are encouraged to offer additional pricing for other related products, items, and/or components which are not specifically addressed as line items in the Request for Proposals. Pricing offered should be noted on the price sheet, page 26, in the format requested. Pricing documents/catalogs shall accompany any additional pricing offered.

*Minimum Specifications continued.....*

## SECTION 3.0

### Price Adjustments

3.1 Prices shall be in effect for the duration of the contract at the unit prices bid, with a price adjustment as follows:

3.1.1 The term "bituminous material" as used herein shall include asphalt cement, liquid asphalt and emulsified asphalt.

3.1.2 "Initial Cost" of bituminous materials as used herein shall mean the cost as determined by the ADOT Price Adjustment for Bituminous Material for the month proposals are opened (See http://www.azdot.gov/highway/cns/bitmat/asp).

3.2 The contract unit price for each item that contains bituminous material will be considered to include all costs of materials as required, including the "initial cost" of bituminous material. The initial cost of bituminous material will be based on the ADOT Monthly Index as follows:

3.2.1 The Adjustment in compensation, either increase or decrease, for bituminous material will be based on the dollar amount change in the ADOT Monthly Index from the month in which the contract was bid compared to the month in which the material was used, on a calendar month basis. This adjustment will apply only to the amount of bituminous material used in the bid item and not to the overall unit cost. The amount of bituminous material in each bid item will be as follows: MC's and liquid asphalt 100%, Terminal blend asphalt rubber 93%, Emulsions, Concentrate 60% (diluted 2:1 40%, diluted 1:1 30%).

3.2.2 Additionally, the adjustment for compensation of bituminous materials will be based on the tons of bituminous material prior to dilution. This adjustment will apply to bituminous material only.

3.2.3 Sample of formula as follows:

($ amount change in ADOT index) X (% of bituminous material) + (amount bid)

3.3 The Supplier certifies in signing this Bid Proposal that the price will be no higher than the lowest price the Supplier charges other buyers for similar quantities under similar conditions.

*Minimum Specifications continued.....*

## SECTION 4.0

## Ordering

4.1 Ordering

4.1.1 Gila County does not warrant the order quantity of any materials or services prior to actual need. Gila County's Public Works personnel may re-order materials as it becomes necessary or based on the required needs within the County during the term of this contract.

4.1.2 Material Supplier shall be given advance notice of material order as needed by Gila County.

4.1.3 SAMPLES: Supplier may be requested to furnish samples of products for examination by the County. Any items so requested shall be furnished within five (5) working days from the date of request and furnished at no cost to the County and sent to the address designated in the Request for Proposals. Unless otherwise specified, materials purchased will be inspected by the Using Agency to ensure the product meets the quality and quantity requirements of the Specifications. Material may be sampled for compliance, as deemed necessary by the County. Any material not meeting the specifications of the contract will be rejected.

4.1.4 TESTING: The awarded Material Supplier is responsible for all laboratory or other appropriate agency for analysis and testing as to whether the product conforms in all respects to the Specifications. It is the responsibility of the material Supplier to furnish the product material certifications at the time of pick-up. Testing shall be done in accordance with ADOT Standard Specifications Section 1005.

4.2 **PRICING:** Prices shall be F.O.B. at plant. Material Supplier – Supplier shall retain title and control of all goods until they are picked-up.

**4.3 MATERIAL MEASURES AND PRICING ADJUSTMENTS:** The product shall be measured by the ton and shall be weighed on approved scales furnished by the Material Supplier or certified public scales at the Suppliers expense. Quantities of material will be determined by the collected weight tickets at the source. Suppliers shall provide certified weight tickets for all picked-up quantities.

*Minimum Specifications continued.....*

4.3.1 Cancellation: Gila County retains the right to cancel orders at any time in the event of inclement weather or other emergency, and other unforeseen work stoppages beyond the control of the successful Supplier or the County. The standby rate shall only apply to time at the project site and until such time as the equipment is directed to leave due to inclement weather or other unforeseen conditions.

**SECTION 5.0**

**Product Specifications – Minimum Specifications: Bid No. 050709-1 Chips, AB, and Asphalt**

The Supplier shall provide a source of Cover Material as described in the Arizona Department of Transportation Standard Specifications for Road and Bridge Construction as stated in Section 404-2.02.© Aggregate Materials.

The aggregate material will be sampled for acceptance in the final stockpile before incorporation into the work. The aggregate material will be considered to be acceptable when the test values for the specified cover material characteristic are within the specified limits. Test values will be provided by the Supplier upon request.

**Asphalt**

M.A.G. Specifications; 710, Table 710-1; Oil Content is 5.1

**AB**

ADOT Specifications, Class II

**Chips**

Aggregate for cover material shall be of clean sand, gravel or crushed rock and shall be free from lumps or balls of clay and shall not contain calcareous or clay coatings, caliches, synthetic materials, organic matter or foreign substances.

*Minimum Specifications continued.....*

The grade shall meet the following requirements when tested in accordance with the requirements of Arizona Test Method 201.

| Minimum Specifications – Chips (Arizona Test Method 201) | |
|---|---|
| **Sieve Size** | **Percent Passing** |
| 3.8 | 100 |
| No. 4 | 0 - 25 |
| No. 8 | 0 - 5 |
| No. 200 | 0 – 2.0 |

The loss on abrasion will be determined in accordance with the requirements of AASHTO T 96 and shall meet the following Requirements.

- Maximum loss of nine percent (9%) at one-hundred (100) revolutions.
- Maximum loss of forty percent (40%) at five-hundred (500) revolutions.

Percent of carbonates in aggregate shall be a maximum of thirty (30) when tested in accordance with the requirements of Arizona Test Method 238.

Percent of fractured coarse aggregate particles shall be a minimum of seventy (70) when tested in accordance with the requirements of Arizona Test Method 212.

Flakiness Index shall be a maximum of twenty-five (25) when tested in accordance with the requirements of Arizona Test Method 233.

Bulk Oven Dry Specific Gravity shall range from 2.30 to 2.85 when tested in accordance with the requirements of Arizona Test Method 210.

## INSURANCE PROVISIONS

### INDEMNIFICATION CLAUSE:

The Supplier agrees to indemnify and save harmless the County of Gila, its officers, agents and employees, and any jurisdiction or agency issuing permits for any work included in the project, their officers, agents and employees, hereinafter referred to as indemnitee, from all suits and claims, including attorney's fees and cost of litigation, actions, loss, damage, expense, cost or claims of any character or any nature arising out of the work done in fulfillment of the terms of this Contract or on account of any act, claim or amount arising or recovered under workers' compensation law or arising out of the failure of the Supplier to conform to any statutes, ordinances, regulation, law or court decree. It is agreed that the Supplier will be responsible for primary loss investigation, defense and judgment costs where this contract of indemnity applies. In consideration of the award of this contract, the Supplier agrees to waive all rights of subrogation against the County, its officers, officials, agents and employees for losses arising from the work performed by the Supplier for the County.

### INSURANCE REQUIREMENTS:

Supplier and subcontractors shall procure and maintain until all of their obligations have been discharged, including any warranty periods under this Contract are satisfied, insurance against claims for injury to persons or damage to property which may arise from or in connection with the performance of the work hereunder by the Supplier, his agents, representatives, employees or subcontractors.

The insurance requirements herein are minimum requirements for this Contract and in no way limit the indemnity covenants contained in this Contract.

The County in no way warrants that the minimum limits contained herein are sufficient to protect the Supplier from liabilities that might arise out of the performance of the work under this Contract by the Supplier, his agents, representatives, employees, or subcontractors. Supplier is free to purchase such additional insurance as may be determined necessary.

A. **MINIMUM SCOPE AND LIMITS OF INSURANCE** - Supplier shall provide coverage with limits of liability not less than those stated below:

1. **Commercial General Liability – Occurrence Form**

   Policy shall include bodily injury, property damage, broad form contractual liability and XCU coverage.

*Insurance Provisions continued.....*

- General Aggregate $2,000,000
- Products – Completed Operations Aggregate $1,000,000
- Personal and Advertising Injury $1,000,000
- Each Occurrence $1,000,000

a. The policy shall be endorsed to include the following additional insured language: **"The County of Gila shall be named as an additional insured with respect to liability arising out of the activities performed by, or on behalf of the Supplier".**

2. **Automobile Liability**

Bodily injury and property damage for any owned, hired, and non-owned vehicles used in the performance of this Contract.

Combined Single Limit (CSL) $1,000,000

a. The policy shall be endorsed to include the following additional insured language: **"The County of Gila shall be named as an additional insured with respect to liability arising out of the activities performed by, or on behalf of the Supplier, including automobiles owned, leased, hired or borrowed by the Supplier".**

3. **Worker's Compensation and Employers' Liability**

| | |
|---|---|
| Workers' Compensation | Statutory |
| Employers' Liability | |
| Each Accident | $100,000 |
| Disease – Each Employee | $100,000 |
| Disease – Policy Limit | $500,000 |

a. Policy shall contain a **waiver of subrogation** against the County of Gila.

4. **Builders' Risk Insurance or Installation Floater** $_____

In an amount equal to the initial Contract Amount plus additional coverage equal to Contract Amount for all subsequent change orders.

a. The County of Gila, the Supplier, subcontractors, engineer and engineer's consultant and any others with an insurable interest in the work shall be **Insured's** on the policy.

*Insurance Provisions continued.....*

b. Coverage shall be written on an all risk, replacement cost basis and **shall include coverage for soft costs, flood and earth movement**.

c. Policy shall be maintained until whichever of the following shall first occur: (1) final payment has been made; or, (2) until no person or entity, other than the County of Gila, has an insurable interest in the property required to be covered.

d. Policy shall be endorsed such that the insurance shall not be canceled or lapse because of any partial use or occupancy by the County.

e. Policy must provide coverage from the time any covered property becomes the responsibility of the Supplier, and continue without interruption during construction, renovation, or installation, including any time during which the covered property is being transported to the construction installation site, or awaiting installation, whether on or off site.

f. Policy shall contain a **waiver of subrogation** against the County of Gila.

g. Supplier is responsible for the payment of all policy deductibles.

B. **ADDITIONAL INSURANCE REQUIREMENTS:** The policies shall include, or be endorsed to include, the following provisions:

1. On insurance policies where the County of Gila is named as an additional insured, the County of Gila shall be an additional insured to the full limits of liability purchased by the Supplier even if those limits of liability are in excess of those required by this Contract.
2. The Supplier's insurance coverage shall be primary insurance and non-contributory with respect to all other available sources.
3. Coverage provided by the Supplier shall not be limited to the liability assumed under the indemnification provisions of this Contract.

C. **NOTICE OF CANCELLATION:** Each insurance policy required by the insurance provisions of this Contract shall provide the required coverage and shall not be suspended, voided, canceled, reduced in coverage or endorsed to lower limits except after thirty (30) days prior written notice has been given to the County. Such notice shall be sent directly to Steve Stratton, 1400 E. Ash St., Globe, AZ 85501 and shall be sent by certified mail, return receipt requested.

*Insurance Provisions continued.....*

D. **ACCEPTABILITY OF INSURERS:** Insurance is to be placed with insurers duly licensed or approved unlicensed companies in the state of Arizona and with an "A.M. Best" rating of not less than B+ VI. The County in no way warrants that the above-required minimum insurer rating is sufficient to protect the Supplier from potential insurer insolvency.

E. **VERIFICATION OF COVERAGE:** Supplier shall furnish the County with certificates of insurance (ACORD form or equivalent approved by the County) as required by this Contract. The certificates for each insurance policy are to be signed by a person authorized by that insurer to bind coverage on its behalf.

All certificates and endorsements are to be received and approved by the County before work commences. Each insurance policy required by this Contract must be in effect at or prior to commencement of work under this Contract and remain in effect for the duration of the project. Failure to maintain the insurance policies as required by this Contract or to provide evidence of renewal is a material breach of contract.

All certificates required by this Contract shall be sent directly to Steve Stratton, 1400 E. Ash St., Globe, AZ 85501. The County project/contract number and project description shall be noted on the certificate of insurance. The County reserves the right to require complete, certified copies of all insurance policies required by this Contract at any time.

F. **SUBCONTRACTORS:** Suppliers' certificate(s) shall include all subcontractors as additional insured's under its policies **or** Supplier shall furnish to the County separate certificates and endorsements for each subcontractor. All coverage's for subcontractors shall be subject to the minimum requirements identified above.

G. **APPROVAL:** Any modification or variation from the insurance requirements in this Contract shall be made by the County Attorney, whose decision shall be final. Such action will not require a formal Contract amendment, but may be made by administrative action.

## QUALIFICATION AND CERTIFICATION FORMS

### Exhibit "D" Suppliers Qualifications and Reference List

### Purpose

This exhibit shall serve as a requirement to enable the evaluation team to assess the qualifications of Suppliers under consideration for final award.

The information may or may not be a determining factor in award.

### SECTION 6.0

**Contract Number 050709-1 Chips, AB, and Asphalt**

The applicant submitting this Proposal warrants the following:

6.1 Name, Address, and Telephone Number of Principal Supplier:

CEMEX
401 E. HOOPES RD
GLOBE, AZ 85501 (928) 425-5775

6.2 Had Supplier (under its present or any previous name) ever failed to complete a contract? _____Yes __X__No. If "Yes, give details, including the date, the contracting agency, and the reasons Supplier failed to perform in the narrative part of this Contract.

6.3 Has Supplier (under its present or any previous name) ever been disbarred or prohibited from competing for a contract? _____Yes __X__No. If "Yes", give details, including the date, the contracting agency, the reasons for the Suppliers disqualification, and whether this disqualification remains in effect in the narrative part of this Contract.

6.4 Has a contracting agency ever terminated a contract for cause with Supplier (under your firm's present or any previous name)? _____Yes __X__No. If "Yes", give details including the date, the contracting agency, and the reasons Supplier was terminated in the narrative part of this Contract.

*Qualification & Certification continued.....*

6.5 Supplier must also provide at least the following information:

a. A brief history of the Suppliers Firm.

b. A Cost Proposal shall be submitted on the Price Sheet, attached hereon and made a full part of this contract by this reference.

c. A list of previous and current customers, which are considered identical or similar to the Scope of Work described herein; shall be submitted on the Reference List, attached hereon and made a full part of this contract by this reference.

d. List the specific qualifications the Supplier has in supplying the specified services.

e. A list of any subcontractors (if applicable) to be used in performing the service must accompany the Proposal. For each subcontractor proposed, this form must be completed in its entirety and **three (3) copies (one (1) original and two copies with original signatures)** included in the Proposal package.

f. Gila County reserves the right to request additional information.

**6.6 Supplier Experience Modifier (e-mod) Rating:** 0.69

A method the National Council on Compensation Insurance (NCCI) uses to measure a business' computed loss ratio and determine a factor, which when multiplied by premium, can reward policyholders with lower losses. E-mod rate may be a determining factor in bid award.

**6.7 Current Arizona Supplier License Number:** 86-0085020

M Reyes
**Signature of Authorized Representative**

MARIO REYES
**Printed Name**

GLOBE AREA MANAGER
**Title**

## PRICE SHEET

Provide the total price proposed on this form. Attach any pertinent cost breakdowns, sub-totals of component cost, etc. to this proposal-pricing page.

CEMEX

| Product Description | FOB Plant *Price Per Ton | Delivered 1400 E. Ash St., Globe, AZ *Price Per Ton |
|---|---|---|
| **1/2" Chips** (12.7 mm) ADOT Spec. | $ ____.____ | $ ____.____ |
| **3/8" Chips** (9.5 mm) ADOT Spec. | $ 12.00 | $ 17.00 |
| **A.B.C.** (ADOT Class 2) | $ 8.00 | $ 13.00 |
| **3/8" Asphalt** (9.5 mm) MAG Spec. | $ ____.____ | $ ____.____ |
| **3/4" Asphalt** (19.0 mm) MAG Spec. | $ ____.____ | $ ____.____ |

**Cost per mile for delivery to other Gila County Locations:** $ PER HOUR/TON

Minimum 0 Ton for pick up FOB plant

Amount $ Ø each occurrence for product returned and disposed.

For product specifications, see Section 6.0, pages 18 and 19. Pricing shall be F.O.B. plant.

* Price to Include All Applicable Taxes and Required Fees. No Tax shall be levied against Labor.

## REFERENCE LIST

These references are required to enable the evaluation team to assess the qualifications of the Suppliers under consideration for final award.

The information may or may not be a determining factor in award.

### References

List at least four customers for whom you have provided service of a similar scope as this Request or Proposal during the past twelve months, in or as close to Gila county as possible.

| CUSTOMER NAME AND ADDRESS | TELEPHONE | PRIMARY CONTACT |
|---|---|---|
| CITY OF GLOBE<br>1250 S. HAGEN ST.<br>GLOBE, AZ 85501 | (928) 425-4959 | MIKE HUMPHREY |
| RUMMEL CONSTRUCTION<br>7520 E. ADOBE DR<br>SCOTTSDALE, AZ 85255 | (480) 222-9922 | TRENT SHORT |
| CONCRETE PLACEMENT<br>6527 W. NORTHVIEW<br>GLENDALE, AZ 85301 | (623) 931-1100 | LIBERTY PRESLEY |
| GILA COUNTY PUBLIC WORKS<br>1400 E. ASH ST.<br>GLOBE, AZ 85501 | (928) 402-8509 | STEVE STRATTON |

M Reyes
Signature of Authorized Representative

MARIO REYES
Printed Name

GLOBE AREA MANAGER
Title

## AFFIDAVIT BY SUPPLIER
## CERTIFYING THAT THERE WAS NO COLLUSION
## IN BIDDING FOR CONTRACT

STATE OF ARIZONA )
)ss
COUNTY OF: GILA )

MARIO REYES
(Name of Individual)

being first duly sworn, deposes and says:

That he is GLOBE AREA MANAGER
(Title)

Of CEMEX and
(Name of Business)

That he is properly pre-qualified by Gila County for bidding on BID **NO. 050709-1** and,

That pursuant to Section 112 (C) of Title 23 USC, he certifies as follows:

That neither he nor anyone associated with the said _____

CEMEX
(Name of Business)

has, directly or indirectly entered into any agreement, participated in any collusion or otherwise taken any action in restraint of free competitive bidding in connection with the above mentioned project.

CEMEX
**Name of Business**

VIRGINIA MOUNCE
NOTARY PUBLIC - ARIZONA
GILA COUNTY
My Commission Expires
February 27, 2011

MARIO REYES
**By**

GLOBE AREA MANAGER
**Title**

**Subscribed and sworn to before me this** 17 **day of** June, **2009.**

Virginia Mounce
**Notary Public**

**My Commission expires:** Feb 27, 2011

## CERTIFICATION: INTENTIONS CONCERNING SUBCONTRACTING

At the time of the submission of **Request for Proposals No. 050709-1 Chips, AB & Asphalt,** my intention concerning subcontracting a portion of the work is as indicated below.

In indicating that it is my intention to subcontract a portion of the work, this will acknowledge that such subcontractors will be identified and approved by the County prior to award of contract; and that documentation, such as copies of letters, requests for quotations, etc., substantiating the actions taken and the responses to such actions is on file and available for review.

☐ YES, it is my intention to subcontract a portion of the work.

☒ NO, it is not my intention to subcontract a portion of the work.

CEMEX
**Name of Business**

M Reyes
**Signature of Authorized Representative**

GLOBE AREA MANAGER
**Title**

6/17/09
**Date**

## ANTI-TERRORISM WARRANTY

**Pursuant to A.R.S. §35-397 the Supplier certifies that it does not have scrutinized business operations in Iran or Sudan and that each is in compliance with the Export Administration Act and not on the Excluded Parties List.**

M Reyes
**Signature of Authorized Representative**

MARIO REYES
**Printed Name**

GLOBE AREA MANAGER
**Title**

## LEGAL ARIZONA WORKERS ACT COMPLIANCE

Supplier hereby warrants that it will at all times during the term of this Contract comply with all federal immigration laws applicable to Supplier's employment of its employees, and with the requirements of A.R.S. § 23-214 (A) (together the "State and Federal Immigration Laws"). Supplier shall further ensure that each subcontractor who performs any work for Supplier under this contract likewise complies with the State and Federal Immigration Laws.

County shall have the right at any time to inspect the books and records of Supplier and any subcontractor in order to verify such party's compliance with the State and Federal Immigration Laws.

Any breach of Supplier's or any subcontractor's warranty of compliance with the State and Federal Immigration Laws, or of any other provision of this section, shall be deemed to be a material breach of this Contract subjecting Supplier to penalties up to and including suspension or termination of this Contract. If the breach is by a subcontractor, and the subcontract is suspended or terminated as a result, Supplier shall be required to take such steps as may be necessary to either self-perform the services that would have been provided under the subcontract or retain a replacement subcontractor, (subject to County approval if MWBE preferences apply) as soon as possible so as not to delay project completion.

Supplier shall advise each subcontractor of County's rights, and the subcontractor's obligations, under this Article by including a provision in each subcontract substantially in the following form:
"Subcontractor hereby warrants that it will at all times during the term of this contract comply with all federal immigration laws applicable to Subcontractor's employees, and with the requirements of A.R.S. § 23-214 (A). Subcontractor further agrees that County may inspect the Subcontractor's books and records to insure that Subcontractor is in compliance with these requirements. Any breach of this paragraph by Subcontractor will be deemed to be a material breach of this contract subjecting Subcontractor to penalties up to and including suspension or termination of this contract."

Any additional costs attributable directly or indirectly to remedial action under this Article shall be the responsibility of Supplier. In the event that remedial action under this Article results in delay to one or more tasks on the critical path of Supplier's approved construction or critical milestones schedule, such period of delay shall be deemed excusable delay for which Supplier shall be entitled to an extension of time, but not costs.

M Reyes
**Signature of Authorized Representative**

MARIO REYES
**Printed Name**

GLOBE AREA MANAGER
**Title**

## SUPPLIERS CHECKLIST

NOTICE IS HEREBY GIVEN that all Proposal Documents shall be completed and/or executed and submitted with this proposal. If supplier fails to complete and/or execute any portion of the Proposal Documents, this bid will be determined to be "non-responsive" and rejected.

### CHECKLIST

| REQUIRED DOCUMENT | COMPLETED/EXECUTED |
|---|---|
| QUALIFICATION & CERTIFICATION FORM | ✓ |
| REFERENCE LIST | ✓ |
| PRICE SHEET | ✓ |
| AFFIDAVIT OF NON-COLLUSION | ✓ |
| INTENTIONS CONCERNING SUBCONTRACTING | ✓ |
| SCRUTINIZED OPERATIONS | ✓ |
| LEGAL AZ WORKERS ACK COMPLIANCE | ✓ |
| OFFER PAGE | ✓ |

---

**ACKNOWLEDGMENT OF RECEIPT OF ADDENDA:**

| | #1 | #2 | #3 | #4 | #5 |
|---|---|---|---|---|---|
| Initials/ Date | | | | | |

Signed and dated this 17 day of JUNE, 2009.

CEMEX
SUPPLIER:

M Leya
BY:

Each proposal shall be sealed in an envelope addressed to Gila County Public Works Division and bearing the following statement on the outside of the envelope: Proposal to Supply: **CHIPS, AB, & ASHPALT, Gila County Arizona, Bid Proposal No. 050709-1.** All proposals shall be filed at **Gila County Public Works Division, 1400 E. Ash St., Globe, AZ 85501**, on or before 2:**00 AM/MST, Thursday, June 18, 2009.**

## OFFER PAGE

**To Gila County**

The undersigned hereby offers and agrees to furnish the material or services in compliance with all terms and conditions, instructions, specifications, and any amendments contained in this Request for Proposals document.

Signature also certifies the Suppliers Bid Proposal is genuine, and is not in any way collusive or a sham; that the Bid Proposal is not made with the intent to restrict or prohibit competition; that the Supplier submitting the proposal has not revealed the contents of the proposal to, or in any way colluded with, any other supplier which may compete for the contract; and that no other Supplier which may compete for the contract has reveled the contents of a proposal to, or in any way colluded with, the supplier submitting this proposal.

**Contract Number: 050709-1 Chips, AB, & Asphalt**

**Supplier Submitting Proposal:**

CEMEX
**Company Name**

401 E. HOOPES RD.
**Address**

GLOBE AZ 85501
**City State Zip**

**For Clarification of this offer, contact:**

**Name:** MARIO REYES

**Phone No.:** (928) 425-5775

**Fax No.:** (928) 425-5779

**Email:** MREYES@CEMEXUSA.com

M Reyes
**Signature of Authorized Representative**

MARIO REYES
**Printed Name**

GLOBE AREA MANAGER
**Title**

Proposal must be signed by a duly authorized officer(s) eligible to sign contract documents for the Supplier.

*Offer Page continued.....*

**The offer is hereby accepted.**

**The Supplier** CEMEX **is now bound to provide the materials or services listed in RFP Number 050709-1, including all terms and conditions, specifications, amendments, etc. and the Supplier's Offer as accepted by County/public entity.**

**The Supplier has been cautioned not to commence any billable work or to provide any material or service under this contract until Supplier receives this signed sheet, or written notice to proceed.**

**GILA COUNTY BOARD OF SUPERVISORS;**

**Awarded this** ~~18th~~ 17th **day of** August**, 2009**

Shirley L. Dawson

**Shirley L. Dawson, Chairman, Board of Supervisors**

**ATTEST;**

for Marian Sheppard Chief Deputy Clerk

**Steven L. Besich, Clerk of the Board / County Manager**

**APPROVED AS TO FORM;**

**Bryan Chambers, Chief Deputy County Attorney**
***for* Daisy Flores, County Attorney**

**Tommie C. Martin, District I Supervisor**
P.O. Box 2297 Payson, AZ. 85547
(928) 474-2029 Ext. 7100

**Michael A. Pastor, District II Supervisor**
1400 E. Ash St. Globe, AZ. 85501
(928) 425-3231 Ext. 8753

**Shirley L. Dawson, District III Supervisor**
1400 E. Ash St., Globe, AZ 85501
(928)425-3231 Ext. 8511

**Don E. McDaniel Jr., County Manager,**
Phone (928) 425-3231 Ext.8761

**Joseph T. Heatherly, Finance Director**
1400 E. Ash St., Globe, AZ 85501
(928)425-3231 Ext. 8743

FAX ((28)425-8104
TTY: 7-1-1

**GILA COUNTY**
**www.gilacountyaz.gov**

**CONTRACT NO. 050709-1**

**CHIPS AND ABC**
**COPPER REGION**

**AMENDMENT #2**

Effective August 17, 2009, Gila County and CEMEX entered into a contract whereby CEMEX agreed to provide 3/8" Chips and ABC to various locations in the Copper Region of Gila County for a sixteen (16) month period. Per Section 2.2 of the Contract, the County shall have the right, at its sole option, to renew the Contract for two (2) additional one (1) year periods.

On January 4, 2011 Amendment No. 1 was approved by the Board of Supervisors to extend the contract for a one (1) year period from December 17, 2010, to December 16, 2011.

Amendment No. 2 will allow the contract to be extended for its final one (1) year term from December 17, 2011, to December 16, 2012.

All terms, conditions and provisions of the original Contract shall remain the same and apply during the renewal period.

**IN WITNESS WHEREOF,** two (2) identical counterparts of this contract, each which shall include original signatures and for all purposes be deemed an original thereof, have been duly executed by the parties hereinabove named, on this _____ day of _____, 2011.

**CONTRACT NO. 050709-1**

**AMENDMENT #2**

**GILA COUNTY:**

**GILA COUNTY BOARD OF SUPERVISORS**

_____

**Tommie C. Martin, Chairman, Board of Supervisors**

**ATTEST**

_____

**Marian Sheppard, Chief Deputy Clerk of the Board**

**APPROVED AS TO FORM:**

_____

**Bryan B. Chambers, Chief Deputy County Attorney**
***for* Daisy Flores, County Attorney**

**SUPPLIER:**

**CEMEX**

_____

**Suppliers Signature**

MARIO REYES

**Print Name**

**Tommie C. Martin, District I Supervisor**
P.O. Box 2297 Payson, AZ. 85547
(928) 474-2029 Ext. 7100

**Michael A. Pastor, District II Supervisor**
1400 E. Ash St. Globe, AZ. 85501
(928) 425-3231 Ext. 8753

**Shirley L. Dawson, District III Supervisor**
1400 E. Ash St., Globe, AZ 85501
(928)425-3231 Ext. 8511

**Don E. McDaniel Jr., County Manager,**
Phone (928) 425-3231 Ext.8761

**Joseph Heatherly, Finance Director**
1400 E. Ash St., Globe, AZ 85501
(928)425-3231 Ext. 8743

FAX ((28)425-8104
TTY: 7-1-1

**GILA COUNTY**
www.gilacountyaz.gov

# CONTRACT NO. 050709-1

## CHIPS and AB
## COPPER REGION

## AMENDMENT #1

Effective August 17, 2009, Gila County and CEMEX entered into a contract whereby CEMEX agreed to provide 3/8" Chips and ABC to various locations in the Copper Region of Gila County for a sixteen (16) month period. Per Section 2.2 of the Contract, the County shall have the right, at its sole option, to renew the Contract for two (2) additional one (1) year periods.

Amendment No. 1 will allow the Contract period to be extended for a one (1) year period from December 17, 2010 to December 17, 2011.

All terms, conditions and provisions of the original Contract shall remain the same and apply during the renewal period.

**IN WITNESS WHEREOF,** three (3) identical counterparts of this contract, each which shall include original signatures and for all purposes be deemed an original thereof, have been duly executed by the parties hereinabove named, on this 4th day of January, ~~2010.~~ 2011.

**CONTRACT NO. 050709-1 CHIPS and ABC COPPER REGION**
**AMENDMENT #1**

**GILA COUNTY:**

**GILA COUNTY BOARD OF SUPERVISORS**

**Michael A. Pastor, Chairman, Board of Supervisors**

**ATTEST**

**Marian Sheppard, Chief Deputy Clerk of the Board**

**APPROVED AS TO FORM:**

**Bryan B. Chambers, Chief Deputy County Attorney**
***for* Daisy Flores, County Attorney**

**CEMEX**

**Supplier Signature**

MARIO REYES
**Print Name**

# GILA COUNTY ATTORNEY

*Daisy Flores*

Re: County Attorney's Office "approval as to form" of contract or agreement.

To whom it may concern:

The County Attorney's Office has reviewed the contract or agreement attached to this agenda item and has determined that it is in its proper form and is within the powers and authority granted under the laws of this state to the public agency requesting the County Attorney's Office review.

## Explanation of the Gila County Attorney's Office "Approval as to Form" Review

The Gila County Attorney's Office is often called upon to review contracts and other agreements between public entities represented by the County Attorney and private venders, contractors, and individuals.

In performing this review, the County Attorney's Office reviews these contracts to see that they are in "proper form" prior to their execution. "Proper form" means that the contract conforms to fundamental contract law, conforms to specific legislative requirements, and is within the powers and authority granted to the public agency. It does not mean that the County Attorney's Office approves of or supports the policy objectives contained in the contract. That approval is solely the province of the public agency through its elected body.

The public agency or department submitting the contract for review has the responsibility to read and understand the contract in order to completely understand its obligations under the contract if it is ultimately approved by the public entity's board. This is because while the County Attorney's Office can approve the contract as to form, the office may not have any idea whether the public agency has the capacity to actually comply with its contractual obligations. Also, the County Attorney's Office does not monitor contract compliance. Hence the public entity or

submitting department will need to be prepared to monitor their own compliance. A thorough knowledge of the provisions of the contract will be necessary to monitor compliance.

Before signing a contract "approved as to form," the County Attorney's Office will answer any questions or concerns the public agency has about the contract. It is the responsibility of the public agency or department submitting the contract for review to ask any specific questions or address any concerns it has about the contract to the County Attorney's Office at the same time they submit the contract for review. Making such an inquiry also helps improve the County Attorney's Office review of the contract because it will help focus the review on specific issues that are of greatest concern to the public agency. Failing to make such an inquiry when the agency does have issues or concerns will decrease the ability of the County Attorney's Office to meaningfully review the agreement.

**ARF-1023** **Consent Agenda Item 5- F**

**Regular BOS Meeting**

**Meeting Date:** 01/10/2012

| | | | |
|---|---|---|---|
| Submitted For: | Linda O'Dell, School Superintendent | Submitted By: | Julie Vasquez, Administrative Assistant, School Superintendent's Office |
| Department: | School Superintendent's Office | | |
| Fiscal Year: | 2012 | Budgeted?: | Yes |
| Contract Dates Begin & End: | 07/01/2011 - 09/30/2012 | Grant?: | Yes |
| Matching Requirement?: | No | Fund?: | Renewal |
| Presenter's Name: | Linda O'Dell | | |

---

Information

Request/Subject

Intergovernmental Agreement No. KR11-0001 among the Gila County Board of Supervisors, the Gila County School Superintendent, the Gila County Superior Court through the Juvenile Court and the Arizona Supreme Court through the Administrative Office of the Courts (AOC).

Background Information

The Arizona Office of the Courts (AOC), on behalf of the Superior Courts for all counties in Arizona and the superintendents of schools for each county, has applied for and received $1,306,718.55 as a sub-grant from the Arizona Department of Education pursuant to PL 107-110, the No Child Left Behind Act of 2001 and other Federal Programs, including Title I-D, Prevention and Intervention Programs for Children and Youth Who are Neglected, Delinquent or At-Risk; Title II-A, Teacher and Principal Training and Recruiting; Part B IDEA Basic (Special Education); and Special Education Secure Care. The purpose of the Intergovernmental Agreement (IGA) is to define the responsibilities of the parties in the development of education programs and the use of funds for Gila County in the amount of $68,559, which represents a portion of the funds sub-granted to the AOC as set forth in Exhibits A-1 and A-2. Involved parties are the Arizona Supreme Court through the Administrative Office of the Courts, the Gila County Board of Supervisors, the Gila County School Superintendent, and the Gila County Superior Court through the Juvenile Court. This IGA becomes effective on the date of final signature, and terminates on September 30, 2013.

Evaluation

Intergovernmental Agreement (IGA) No. KR11-0111 has been reviewed and approved for form by an Assistant Attorney General of the Office of the Attorney General, State of Arizona. The IGA includes twenty-nine (29) sections, including Recitals; Purpose; Authority; Term and Renewal; Duties of the AOC, Courts and Superintendent; Fund Accounting; Expenditures; and other contractual elements. Recitals reflect that the AOC, on behalf of the Superior Courts for all counties in Arizona and the superintendents of schools for each county, applied for and received $1,306,718.55 as a sub-grant from the Arizona Department of Education (ADE) for fiscal years 2011/2012 and 2012/2013, respectively. The portion of these funds allocated to Gila County is $68,559, which represents a portion of the funds sub-granted to the AOC and is set forth in the attached Exhibits A-1 and A-2.

Conclusion

Intergovernmental Agreement No. KR11-0111 needs to be approved and signed by the Board of Supervisors in order for the School Superintendent to submit it to the Arizona Supreme Court, Administrative Office of the Courts for final signatures and subsequent receipt of funds.

Recommendation

The Gila County School Superintendent recommends that the Board of Supervisors approve Intergovernmental Agreement No. KR11-0111 in order to support continued services for the Juvenile Detention Education Program.

Suggested Motion

Approval of Intergovernmental Agreement No. KR11-0111 between the Gila County Board of Supervisors, the Gila County School Superintendent, the Gila County Superior Court through the Juvenile Court and the Arizona Supreme Court through the Administrative Office of the Courts, for Title I, Special Education and other associated funds in the amount of $68,559 to support continued services for the Gila County Juvenile Detention Education Program effective upon the date of final signature through September 30, 2013.

---

Attachments

KR11-0111

IGA Legal Approval

Gila

Thomas C. Horne
Attorney General

**Office of the Attorney General**
State of Arizona

# INTERGOVERNMENTAL AGREEMENT DETERMINATION

Attorney General Contract No. KR11-0111 which is an Agreement between public agencies, has been reviewed pursuant to A.R.S. § 11-952 by the undersigned Assistant Attorney General, who has determined that it is in the proper form and is within the powers granted under the laws of the State of Arizona to those Parties to the Agreement represented by the Attorney General.

Dated this 12th Day of December, 2011

THOMAS C. HORNE
The Attorney General

Assistant Attorney General

351714

KR11-0111

# INTERGOVERNMENTAL AGREEMENT AMONG THE ARIZONA SUPREME COURT, THE GILA COUNTY SCHOOL SUPERINTENDENT AND THE GILA COUNTY SUPERIOR COURT

This is an Intergovernmental Agreement, hereinafter referred to as "IGA", among the Arizona Supreme Court through the Administrative Office of the Courts, hereinafter referred to as "AOC", the Gila County Board of Supervisors, hereinafter referred to as "Board", the Gila County School Superintendent, hereinafter referred to as "Superintendent", and the Gila County Superior Court through the Juvenile Court, hereinafter referred to as "Court", subject to the following terms and conditions:

## 1. Recitals

The AOC, on behalf of the Superior Courts for all counties in Arizona and the superintendents of schools for each county, applied for and received $1,306,718.55 as a sub-grant from the Arizona Department of Education (ADE) pursuant to PL 107-110, No Child Left Behind Act of 2001 (NCLB), 20 USCA Ch. 70, Subch. I, Improving the Academic Achievement of the Disadvantaged, 20 USCA Ch. 70, Subch. I, § 6301 et. seq. and 34 CFR 76, as applicable. The specific sections of 20 USCA Ch. 70, Subch. I include Part D- Prevention and Intervention Programs for Children and Youth Who are Neglected, Delinquent or At-Risk (20 USCA Ch. 70, Subch. I, Part D, § 6421 et. seq.). Additional sources of funding include: 20 USCA Ch. 70, Subch. II, Part A (Teacher and Principal Training and Recruiting Fund); Part B IDEA Basic; P.L. 108-446, 20 USCA, Sections 1400-1409, 1411-1419, 1431-1444, 1450-1455, 1461-1466, 1470-1475 and 1481-1482, Special Education Secure Care Grant, and other associated funds.

## 2. Purpose

The purpose of the IGA is to define the responsibilities of the parties in the development of education programs and the use of funds in the amount of $ 68,559 which represents a portion of the funds sub-granted to the AOC and is set forth in the attached Exhibits A-1 and A-2.

## 3. Authority

The AOC and the Court have the authority to enter into this IGA pursuant to Article VI, section 3, of the Arizona Constitution, A.R.S. §§ 11-952, 8-371 (as applicable), and § 15-913. The Superintendent has the authority to enter into this IGA pursuant to A.R.S. §§ 15-302, 15-308 (as applicable), 15-913, 15-342, (as applicable), and § 11-952. The Board has the authority to enter into this IGA pursuant to § 11-952.

## 4. Term and Renewal

This IGA shall become effective on the date of final signature, and shall terminate on September 30, 2013.

5. **Duties of the AOC**

The AOC shall:

a. Provide technical assistance regarding Title I and associated other funds, including its purpose, appropriate use of funds, reporting requirements and the development of appropriate Title I and associated fund programs

b. Provide Gila County $ 68,559 to the Superintendent to be spent as outlined in Exhibit A-1 and A-2.

c. Provide administrative support services for the application, budget and reporting to the Arizona Department of Education for the sub-grant which was obtained on behalf of the parties.

d. Provide administrative support for the preparation of the application to the Department of Education for a new sub-grant for funds to be applied for on behalf of the parties for fiscal years 2011/2012 and 2012/2013, respectively.

e. Provide training, education and support for detention educators regarding appropriate education remediation.

f. Review contracts with third parties relating to this IGA and school operations, as necessary to carry out obligations as the fiscal pass-through agent. Maintain documentation of contracts at the AOC and the Superintendent's office.

g. Make financial distributions as approved by the Arizona Department of Education (ADE) to the Superintendent within 10 business days after all of the following conditions have been met:

    1. receipt of funds from the ADE,

    2. a current original executed IGA or Amendment,

6. **Duties of the Court**

The Court shall:

a. Pursuant to A.R.S. § 15-913, the Court shall work in cooperation with the Superintendent and shall agree on the method of delivery of the juvenile detention center education program. Pursuant to the court's statutory obligation to agree on the method of delivery of juvenile detention education programs, the Court shall:

    1. Work in cooperation with the Superintendent to develop and deliver programs which are in accordance with the Arizona Consolidated State Application which received approval

by the United States Department of Education (USDOE) on June 10, 2003, the State Plan (20 USCA Ch. 70, Subch. I, § 6311) and the Title Funds Budget Application, attached as Exhibit A-1.

2. Comply with any applicable requirements of No Child Left Behind Act of 2001 (NCLB) P L 107-110, 20 USCA Ch. 70, Subch. I, § 6301 et. seq.; 20 USCA Ch. 70, Subch. I, Part D, § 6421 et. seq. and applicable CFRs, Titles II-A; Part B IDEA Basic, Special Education Secure Care Grant, and other associated funds.

**b.** Carry out the duties of the court in a manner that assists and supports the Superintendent's duties as enumerated in section 7 of this IGA.

**c.** Work in cooperation with the superintendent to provide a minimum of 225 total instructional days in the juvenile detention center.

**d.** Provide program reports, as requested, and maintain adequate documentation for purposes of fiscal audit, monitoring and program evaluation.

**e.** Should the Court and Superintendent agree that the Court rather than the Superintendent perform these duties; a written agreement shall record such intent and operations. Such an agreement shall be presented by the Court to the AOC for review and approval as the pass-through fiscal agent for funds associated with this IGA, prior to the execution of the IGA.

## 7. Duties of the Superintendent

The Superintendent shall:

**a.** Pursuant to A.R.S. § 15-913, the Superintendent shall work in cooperation with the Court and shall agree on the method of delivery of the juvenile detention center education program. Pursuant to the superintendent's statutory obligation to agree on the method of delivery of juvenile detention education programs, the Superintendent shall:

1. Work in cooperation with the Court to develop and deliver programs which are in accordance with the Arizona Consolidated State Application which received approval by the USDOE on June 10, 2003, the State Plan (20 USCA Ch. 70, Subch. I, § 6311) and the Title Funds Budget Application, attached as Exhibit A-1.

2. Comply with any applicable requirements of No Child Left Behind Act of 2001 (NCLB) P L 107-110, 20 USCA Ch. 70, Subch. I, § 6301 et. seq.; 20 USCA Ch. 70, Subch. I, Part D, § 6421 et. seq. and applicable CFRs, Titles II-A; Part B IDEA Basic, Special Education Secure Care Grant, and other associated funds.

**b.** Work with the Court and the AOC in the preparation of the application for NCLB and associated funds for fiscal years 2011/2012 and 2012/2013, respectively.

**c.** Work with the Court to implement eligible program activities and maintain adequate documentation to fulfill all statutory program requirements.

**d.** Implement appropriate supplemental instructional activities in keeping with the intent and purpose of Title I (as described in PL 107-110 "No Child Left Behind Act of 2001" as amended and CFR) and shall provide program reports as requested to the AOC and the Court.

**e.** Spend Title I funds for salaries which reflect at least 12%, but no more than 35%, in benefits.

**f.** Follow requirements of the Uniform System of Financial Records (USFR), described in A.R.S. § 15-271, and published in a manual by the Arizona Department of Education and the Auditor General.

**g.** Work in cooperation with the Court to ensure that the total instructional days in juvenile detention centers shall have a minimum threshold of 225 days.

**h.** Maintain a comprehensive inventory of all capital equipment purchased and file an annual financial report with the AOC using the forms supplied by the AOC, which include the "Capital Outlay" worksheet.

**i.** Maintain and provide to the AOC upon request job descriptions, certification information, annual teacher assessments, salary schedules, and documented performance initiatives, if applicable.

**j.** Ensure that the funds are not used to supplant already existing funds that would, in the absence of Title I and all related funds, be available from non-federal sources for the education of these juveniles.

**k.** Work with the Court to provide services to students in secure care settings that:

1. provide for an academic assessment and survey of educational status while in the detention education program,

2. attempt to coordinate the program with each pupil's school district of residence to assist the pupil's transition back to the school district at the appropriate time pursuant to A.R.S. § 15-913 this includes assisting pupils to re-enter or re-enroll into a public school after leaving the detention education program,

3. ensure students successfully complete assigned work while in the detention facility,

4. ensure transfer credits for work completed while in the detention facility,

5. assist students to transition to public and/or alternative education placements, including assisting the pupil's transition back to the school district at the appropriate time pursuant to A.R.S. § 15-913.

**l.** Complete an annual program evaluation report on forms supplied by the AOC and submit to the AOC by August 31st of each fiscal year, and include it in the final report required in paragraph 9.

**m.** Document the results of an assessment of basic academic skills for each student and summarize the results, and include it in the final reports required in paragraph 9.

**n.** Ensure that funds are spent in accordance with all state and federal Title I and associated funds rules and regulations.

**o.** Ensure that funds are spent in accordance with Exhibit A-1 and A-2.

**p.** Ensure that funds are spent and programs are developed which are in accordance with the Arizona Consolidated State Application approved by the USDOE on June 10, 2003.

**q.** Provide program reports, as requested, and maintain adequate documentation for purposes of fiscal audit, monitoring and program evaluation and shall adhere, in particular, to assurances given pursuant to Title II-A.

**r.** Retain contracts with third parties relating to this IGA and school operations. Documentation of contracts shall be maintained at the Superintendent's office and will be provided as requested. Adequate documentation will be maintained for audit and monitoring purposes.

**s.** Should the Superintendent and the Court agree that the Court rather than the Superintendent perform these duties; a written agreement shall record such intent and operations. Such an agreement shall be presented by the Court to the AOC for review and approval as the pass-through fiscal agent for funds associated with this IGA, prior to the execution of the IGA.

## 8. Fund Accounting

Funds distributed to the Superintendent shall be deposited in a Special Reserve Fund ***and each program must be accounted for separately.*** Any interest earned on these monies while in the possession of the Superintendent shall accrue to ***each separate program account*** and must be reverted to the AOC when the Fiscal Closing Report is submitted in accordance with Exhibit A and the terms of this IGA.

## 9. Expenditures

**a. Reporting Requirements.** A closing report is required. The Superintendent shall submit a final report no later than August 31st of each fiscal year. The final report shall include a closing financial statement, a final report outlining program achievements (progress toward goals identified) and a check/warrant for any unexpended funds and interest as requested.

**b. Unexpended Funds.** The Superintendent may carry over no more than 15% for Title I funds unencumbered and unexpended as of June 30th of each fiscal year, upon request of AOC, and if approved by the ADE. However, if the AOC determines that the funds have been misspent or that the Superintendent shall not be approved to receive funds for the next fiscal cycle, or the AOC shall not receive funds from the ADE for the next fiscal cycle, all unexpended funds and interest shall be returned within 30 days of written notification. A closing financial statement shall be signed

by the Superintendent and Director of Juvenile Court Services. Unexpended funds shall be handled pursuant to federal and state requirements.

c. **Inappropriate Expenditures.** The Superintendent shall expend funds only for the purposes and uses specified in the budgets which were approved by the AOC. The Superintendent agrees to reimburse the AOC for any unauthorized or inappropriate expenditures which are not in compliance with this IGA. Funds may be used to pay county or city administrative costs for legitimate services associated with receipt of these funds to not exceed a combination of 8%, if approved in the budget, attached as Exhibit A-1. All equipment purchased with these funds shall be used solely for purposes identified in this IGA unless written permission is received from the AOC to utilize such equipment for other specified purposes, as appropriate within the guidelines and intent of the funds as defined in this agreement.

d. **Budget Modifications.** The Superintendent shall not shift funds from, to, or within budgeted categories of the approved budgets by more than 10% without prior written authorization from the AOC. All budget modifications shall be in accordance with federal and state budget policies.

e. **Termination of Funding.** In the event that this IGA is terminated prior to September 30, 2013 all unexpended funds in the possession of the Superintendent shall be returned to the AOC within 30 days of such termination, along with, but not limited to: (1) a closing financial statement; (2) a final report outlining the program achievements and progress toward identified goals; and (3) an inventory, including serial numbers, of all equipment purchased with these funds. If termination is due to failure of the Superintendent to comply with the approved plan or the terms of this IGA, the AOC may require return of equipment and supplies purchased with these funds.

10. **Books and Records**

a. **Financial Records and Examination.** The Superintendent shall maintain and shall require its subcontractors to maintain acceptable accounting systems, records, and documents to properly reflect all funds expended in the performance of this IGA. All books, records and other documents relevant to this IGA shall be retained by the Superintendent and subcontractors for a period of 5 years after the final payment has been made, or until after the resolution of any audit questions or contract disputes, whichever is longer. AOC, state, or federal auditors, as applicable, and any other persons duly authorized by the AOC shall have full access to, and the right to examine, audit, copy and make use of any and all said materials. All subcontracts shall include a provision acknowledging the authority of the AOC to conduct such audits or examinations.

b. **Program Records and Evaluation.** The AOC shall monitor and evaluate compliance with this IGA. The Superintendent and Court agree to maintain and provide to the AOC such data and statistics as may be required by the AOC for purposes of evaluation. The Superintendent and Court further agree that authorized agents of the AOC shall have the right to conduct on-site visits for purposes of compliance monitoring and program evaluation. All subcontracts shall include a

provision acknowledging the authority of the AOC to conduct such inspections and evaluations.

## 11. Inventory

The Superintendent shall retain ownership of equipment purchased with funds received pursuant to and in compliance with this IGA, and shall maintain written inventory and property control policies and procedures in accordance with applicable federal requirements and requirements of USFR.

## 12. Use, Loss and Disposition of Equipment

Equipment must be used as required by this IGA for five years, unless written permission is given by the AOC. After this time, the equipment may be transferred upon agreement between the presiding judge and the Superintendent. The Superintendent is responsible for any maintenance, loss or damage to the equipment. Equipment which is no longer needed or usable shall be surplused as required by local surplus property procedures and may be utilized as long as the procedures are consistent with federal and state requirements.

Property purchased from funds disbursed pursuant to this IGA shall belong to the Superintendent upon the termination or cancellation of the IGA or upon its expiration without further renewal, but shall remain at the detention center as long as the property is being used in a manner similar and consistent with its original intent.

## 13. Confidentiality

**a.** There shall be no disclosure of personally identifiable information from any student's education records except in compliance with A.R.S. § 15-141, the Family Educational Rights and Privacy Act (FERPA) and regulations adopted pursuant to that Act, the Individuals with Disabilities Education Act (IDEA) and regulations adopted thereunder, and applicable school board policies.

**b.** The parties shall establish and maintain procedures and controls that are acceptable to the AOC for the purpose of assuring that no information contained in court records or obtained for the Court shall be disclosed by anyone except as is necessary in the performance of the duties as described herein. No information pertaining to juveniles shall be divulged, other than as required in the performance of the duties as described herein.

**c.** The provision and use of all information covered by the terms of this Agreement shall be in strict compliance with federal and state statutes, court rules and regulations concerning confidentiality, in particular, Rule 19, Rules of Procedure Juvenile Court, and Rule 123, Rules of the Supreme Court. The parties shall establish and maintain procedures and controls that are acceptable to the Court for the purpose of assuring that no information contained in its records or obtained from the Court or from others in carrying out its functions under the IGA shall be used or disclosed by it, its agents, officers, or employees, except as is necessary in the performance of duties under this IGA. Persons requesting such information shall be referred to the Court. The parties also agree that any information pertaining to probationers or juveniles shall not be divulged, other than to employees or officers of

Contractor as required of the performance of duties under the Contract, except upon the prior, written consent of the Court.

## 14. Modification and Termination

a. This IGA may be terminated for any reason by any party upon thirty (30) days written notice to all parties. Notice of termination must be in writing and delivered personally to the designated representative or sent by certified mail.

b. Any modification to this IGA must be done in writing and executed by all parties, including transfer of funds to another county.

## 15. Indemnity

Each party agrees to be responsible for the conduct of its operations and performance of contract obligations and for any accidents or injuries to persons or property arising out of acts or omissions by its officers, agents or employees acting in the course or scope of their employment while performing duties undertaken pursuant to this IGA.

## 16. Rights and Duties of Party Only

The provisions of this IGA govern the duties and responsibilities of the parties to the IGA and are not intended to confer any right, entitlement, privilege or benefit on any third party.

## 17. Entire IGA

This IGA contains the entire understanding of the parties hereto. There are no representations or other provisions other than those contained herein, and any amendment or modification of this IGA shall be made only in writing and signed by the parties to this IGA.

## 18. Incorporation by Reference and Invalidity of Part of the IGA

The parties agree that should any part of this IGA be held to be invalid or void, the remainder of the IGA shall remain in full force and effect. This IGA shall be deemed to have incorporated by reference all laws governing the intergovernmental agency agreements and mandatory contract provisions of state agencies required by statute or executive order and shall be construed accordingly.

## 19. Compliance with Non-Discrimination Laws

All parties shall comply with applicable provisions of Title VII of the Civil Rights Act of 1964, as amended by the Age Discrimination in Employment Act, and State Executive Order No. 2009-9 which mandates that all persons, regardless of race, color, religion, sex, age, national origin or political affiliations, shall have equal access to employment opportunities. The parties shall also comply with the Rehabilitation Act of 1973, as amended, which prohibits discrimination in the employment or advancement of qualified persons because of physical or mental disability, and the Americans with Disabilities Act.

## 20. Conflict of Interest

The parties acknowledge that this IGA is subject to cancellation provisions pursuant to A.R.S. § 38-511, the provisions of which are incorporated herein and made a part thereof.

## 21. Legal Authority

Neither party warrants to the other its legal authority to enter into this Agreement. If a court, at the request of a third person, should declare that either party lacks authority to enter in this IGA, or any part of it, then the IGA, or parts of it affected by such order, shall be null and void, and no recovery may be had by either party against the other for lack of performance or otherwise.

## 22. Worker's Compensation

Each party shall comply with the notice of A.R.S. § 23-1022 (E). For purposes of A.R.S. § 23-1022, each party shall be considered the primary employer of all personnel currently or hereafter employed by that party, irrespective of the operations of protocol in place, and said party shall have the sole responsibility for the payment of Worker's Compensation benefits or other fringe benefits of said employees.

## 23. No Joint Venture

It is not intended by this IGA to, and nothing contained in this IGA shall be construed to, create any partnership, joint venture or employment relationship between the parties or create any employer-employee relationship between the employees of one Party to another Party. Neither party shall be liable for any debts, accounts, obligations or other liabilities whatsoever of the other, including (without limitation) the other party's obligation to withhold Social Security and income taxes for itself or any of its employees.

## 24. No Third Party Beneficiaries

Nothing in the provisions of this IGA is intended to create duties or obligations to or rights in third parties not parties to this IGA or affect the legal liability of either party to the IGA by imposing any standard of care with respect to the maintenance of public facilities different from the standard of care imposed by law.

## 25. Availability of Funds

Every payment obligation of the State under this Agreement is conditioned upon the availability of funds appropriated or allocated for the payment of such obligation. If funds are not allocated and available for the continuance of this Agreement, this Agreement may be terminated by the State at the end of the period for which funds are available. No liability shall accrue to the State in the event this provision is exercised, and the State shall not be obligated or liable for any future payments or for any damages as a result of termination under this paragraph.

## 26. Compliance with the Arizona Legal Workers Act, A.R.S. § 41-4401.

**a.** Each party warrants compliance with all Federal immigration laws and regulations relating to employees and warrants its compliance with A.R.S. § 23-214(A). (That subsection reads: "After December 31, 2007, every employer, after hiring an employee, shall verify the employment eligibility of the employee through the E-Verify program."). If this compliance requirement disqualifies any of the parties' key personnel or individuals working at the direction of any of the parties and no acceptable alternative is provided the Court may terminate this contract.

**b.** A breach of a warranty regarding compliance under subparagraph A shall be deemed a material breach of the contract that is subject to penalties up to and including termination of the contract.

**c.** The Court retains the legal right to audit and inspect the papers of any of the parties' employees or subcontractor's employees who work on the contract to ensure that the parties' personnel and any person working at the direction of any party is complying with the warranty under subparagraph A.

## 27. Scrutinized Business Operations.

Pursuant to A.R.S. §§ 35-391.06 and 35-393.06, the parties certify that they do not have a scrutinized business operation in Sudan or Iran. For the purpose of this Section the term "scrutinized business operations" shall have the meanings set forth in A.R.S. § 35-391 or and 35-393, as applicable. If the Court determines that any of the parties submitted a false certification, the Court may impose remedies as provided by law including cancellation or termination of this Agreement.

## 28. Audits.

Pursuant to A.R.S. §§ 35-214 and 35-215, the parties shall retain all records relating to this Agreement for a period of five years after completion of the Agreement. All records shall be subject to inspection and audit by the State of Arizona at reasonable times. Upon request of either party, the other party shall produce the original of any or all such records at the offices of the requesting party.

(REMAINDER OF PAGE INTENTIONALLY LEFT BLANK)

**29. Notice**

All notices, requests for payment, or other correspondence between the parties regarding this IGA shall be mailed or delivered personally to the respective parties to the following addresses:

**AOC:**
Teasie Colla
Arizona Supreme Court
Juvenile Justice Services Division
1501 West Washington, Suite 337
Phoenix, AZ 85007

**COURT:**
Kendall Rhyne
Director of Juvenile Court Services
Gila County Juvenile Court
1100 E. Monroe St.
Globe, Arizona 85501

**SUPERINTENDENT:**
Dr. Linda O'Dell
Gila County Superintendent of Schools
1400 E. Ash Street
Globe, Arizona 85501

SIGNATURE PAGE FOLLOWS

**IN WITNESS WHEREOF**, the parties hereto have executed this Intergovernmental Agreement on the date written below.

**AOC:**

By: David K. Byers
Administrative Director
Arizona Supreme Court

Date

**Superior Court of Arizona in and for Gila County:**

By: Honorable Peter Cahill
Presiding Juvenile Court Judge

12-22-11
Date

**Superintendent:**

Linda L. O'Dell

By: Dr. Linda O'Dell

12-16-11
12-16-11
Date

**Board of Supervisors:**

By: Chairman

Date:

**Superintendent's Counsel:**

By:

Date:

**Board of Supervisors Counsel:**

By:

Date:

# Exhibit A-1
## FY12 Budget Application

| Public Educational Agency (PEA) **Arizona Supreme Court** | County **GILA** | | Name Richard Vierling | | Phone 928.402.8781 | |
|---|---|---|---|---|---|---|
| **Function Code** | **Object Code** | **Title I-D** | **Title II-A** | **Part B IDEA Basic** | **IDEA Secure Care** | **Line Item Totals** |
| **Current FY12 Allocation** | | **$20,233.00** | **$6,147.00** | **$36,634.00** | **$5,545.00** | **$68,559.00** |
| Carryover from FY11 (+) | | **$2,897.03** | **$1,671.58** | **$30,646.88** | **$6,171.88** | **$41,387.37** |
| ADE Approved **Interest** Carryover FY11 | | **$3.00** | **$6.00** | **$65.00** | **$0.00** | **$74.00** |
| ***Total Program Budget Allocation FY12 (=)** | | **$23,133.03** | **$7,824.58** | **$67,345.88** | **$11,716.88** | **$110,020.37** |
| **Instruction 1000** | | | | | | |
| Salaries | 1000-6100 | $7,560.00 | | $8,544.00 | | **$16,104.00** |
| Employee Benefits | 1000-6200 | $617.65 | | $1,536.00 | | **$2,153.65** |
| Purchased Professional Services | 1000-6300 | | | | | **$0.00** |
| Purchased Property Services | 1000-6400 | | | | | **$0.00** |
| Other Purchased Services | 1000-6500 | | | | | **$0.00** |
| Supplies | 1000-6600 | | | $20,000.00 | $11,716.88 | **$31,716.88** |
| Other Expenses | 1000-6800 | | | | | |
| **Support Services 2100, 2200, 2600-2900** | | | | | | |
| Salaries | 2100-6100 | $3,000.00 | | $5,000.00 | | **$8,000.00** |
| Employee Benefits | 2100-6200 | $533.40 | | $500.00 | | **$1,033.40** |
| Purchased Professional Services | 2100-6300 | | $2,824.58 | $20,765.88 | | **$23,590.46** |
| Purchased Property Services | 2100-6400 | | | | | |
| Other Purchased Services | 2100-6500 | | $2,500.00 | $5,000.00 | | **$7,500.00** |
| Supplies | 2100-6600 | | | | | **$0.00** |
| Other Expenses | 2100-6800 | | | | | **$0.00** |
| **Support Services - Admin 2300, 2400, 2500** | | | | | | |
| Salaries | 2300-6100 | $10,383.00 | | | | **$10,383.00** |
| Employee Benefits | 2300-6200 | $1,038.98 | | | | **$1,038.98** |
| Purchased Professional Services | 2300-6300 | | | | | |
| Purchased Property Services | 2300-6400 | | | | | |
| Other Purchased Services | 2300-6500 | | $2,500.00 | | | **$2,500.00** |
| Supplies | 2300-6600 | | | | | |
| Other Expenses | 2300-6800 | | | | | |
| **Capital Outlay** | 6700 et al. | | | $6,000.00 | | **$6,000.00** |
| **PROPOSED BUDGET EXPENDITURE TOTAL FY12** | | **$23,133.03** | **$7,824.58** | **$67,345.88** | **$11,716.88** | **$110,020.37** |

12-22-11
Director of Juvenile Court Services Date

Linda L. O'Dell 12-16-11
County School Superintendent Date

P. L. 107-110 NO CHILD LEFT BEHIND ACT OF 2001 (NCLB)

# Budget Description Page FY2012, Exhibit A – 2

When listing staff salaries, calculate and include full-time equivalencies (FTEs)
For ALL costs, give specific program descriptions and rationale

| Budget Description | | |
|---|---|---|
| Function and Object Code | Itemized Project Costs | Budgeted Amount |
| **Instruction 1000** | | |
| **Salaries 6100**<br>Title I-D and Part B IDEA Basic only | **Title ID:** .55 Instructional Aide (135 days X 4 hours X $14.00 =$7,560, **IDEA Basic:** .11 FTE Special Education Teacher (11% of $50,400=$5,544), Substitutes for SPED teacher to attend professional development activities=$3,000. | $16,104 |
| **Employee Benefits 6200**<br>Title I-D and Part B IDEA Basic only | **Title ID:** Benefits for Instructional Aide @ 8.17%= =$617.65, **IDEA Basic:** Benefits for .11 FTE Special Education Teacher:(11% of 8.17% of $50,400 (453) + 11% of medical benefits of $5,000 (550). Total: 1003), B.) Benefits for substitutes @ 17.78%=533 | $2,687.05 |
| **Purchased Professional Services 6300**<br>Title I-D only | | |
| **Purchased Property Services 6400**<br>Title I-D only | | |
| **Other Purchased Services 6500**<br>IDEA Secure Care only | | |
| **Supplies 6600**<br>Title I-D, Part B IDEA Basic, and IDEA Secure Care only | **IDEA Basic:** Supplies and classroom materials=$20,000. Includes filing cabinets for Special Education records. **IDEA Secure Care:** Classroom supplies and materials= $11,716.88 | $31,716.88 |
| **Support Services 2100** | | |
| **Salaries 6100**<br>Title I-D, II-A, and Part B IDEA Basic only | **Title I:** Substitutes for regular teacher to attend professional development activities=$3,000. **IDEA Basic:** Merit Pay for SPED teacher for completion of NCA/CITA School Improvement Goals for FY2012= $5,000. | $8,000 |
| **Employee Benefits 6200**<br>Title I-D, II-A, and Part B IDEA Basic only | **Title I:** Benefits for instructional aide @ 17.78%=$533.40, **IDEA Basic:** Benefits for Merit Pay @ 10%=$500 | $500 |
| **Purchased Professional Services 6300**<br>Title I-D, II-A, and Part B IDEA Basic only | **Title IID:** ASCD Membership fee, fee for Advanced Education for Accreditation for FY2012, other PD fees =$2,824.58. **IDEA Basic:** Fees for professional development, counseling/transition and other Special Education services= $20,765.88. Includes fee for | $23,590.46 |

| | | |
|---|---|---|
| | "Towards No Tobacco" program. | |
| **Other Purchased Services 6500**<br>Title I-D, II-A, and Part B IDEA Basic only | **Title IID:** Travel expenses in support of professional development for teacher and aide =$2,500. **IDEA Basic:** Travel for Special Education teacher to attend conferences, workshops, etc. = $5,000 | $7,500 |
| **Supplies 6600**<br>Title II-A and Part B IDEA Basic Only | | |
| **Other Expenses 6800**<br>Title I-D and Part B IDEA Basic Only | | |
| **Support Services 2300** | | |
| **Salaries 6100**<br>Title I-D and Title II-A only | **Title ID:** .13 Administrative Support salaries=$10,383 | $10,383 |
| **Employee Benefits 6200**<br>Title I-D and Title II-A only | **Title ID:** Benefits for .13 Administrative Support salaries=$1038.98 | $1,038.98 |
| **Other Purchased Services 6500**<br>Title II-A only | **Title IID**: Administrative travel to support professional development activities=$2,500 | $2,500 |
| **Capital Outlay 6700 et. al.**<br>Title I-D, Part B IDEA Basic and IDEA Secure Care only | **IDEA Basic:** 3 Laptops for teacher, student and aide use =$6,000. | $6,000 |

*GILA COUNTY ATTORNEY*
*Daisy Flores*

Re: County Attorney's Office approval of IGA pursuant to A.R.S. § 11-952(D).

To whom it may concern:

The County Attorney's Office has reviewed the Intergovernmental Agreement attached to this agenda item and has determined that it is in its "proper form" and "is within the powers and authority granted under the laws of this state to such public agency or public procurement unit" pursuant to A.R.S. § A.R.S. § 11-952(D).

## Explanation of the Gila County Attorney's Office Intergovernmental Agreement (IGA) Review

A.R.S. § 11-952(D) requires that

> every agreement or contract involving any public agency or public procurement unit of this state . . . before its execution, shall be submitted to the attorney for each such public agency or public procurement unit, who shall determine whether the agreement is in proper form and is within the powers and authority granted under the laws of this state to such public agency or public procurement unit.

In performing this review, the County Attorney's Office reviews IGAs to see that they are in "proper form" prior to their execution. "Proper form" means that the contract conforms to fundamental contract law, conforms to specific legislative requirements, and is within the powers and authority granted to the public agency. It does not mean that the County Attorney's Office approves of or supports the policy objectives contained in the IGA. That approval is solely the province of the public agency through its elected body.

Likewise, this approval is not a certification that the IGA has been properly executed. Proper execution can only be determined after all the entities entering into the IGA have taken legal action to approve the IGA. There is no statutory requirement for the County Attorney's Office to certify that IGAs are properly executed.

Nonetheless, it is imperative for each public agency to ensure that each IGA is properly executed because A.R.S. § 11-952(F) requires that "[a]ppropriate action … applicable to the governing bodies of the participating agencies approving or extending the duration of the … contract shall be necessary before any such agreement, contract or extension may be filed or become effective." This can be done by ensuring that the governing body gives the public proper notice of the meeting wherein action will be taken to approve the IGA, that the item is adequately described in the agenda accompanying the notice, and that the governing body takes such action. Any questions regarding whether the IGA has been properly executed may be directed to the County Attorney's Office.

Proper execution of IGAs is important because A.R.S. § 11-952(H) provides that "[p]ayment for services under this section shall not be made unless pursuant to a fully approved written contract." Additionally, A.R.S. § 11-952(I) provides that "[a] person who authorizes payment of any monies in violation of this section is liable for the monies paid plus twenty per cent of such amount and legal interest from the date of payment."

The public agency or department submitting the IGA for review has the responsibility to read and understand the IGA in order to completely understand its obligations under the IGA if it is ultimately approved by the public entity's board. This is because while the County Attorney's Office can approve the IGA as to form, the office may not have any idea whether the public agency has the capacity to actually comply with its contractual obligations. Also, the County Attorney's Office does not monitor IGA compliance. Hence the public entity or submitting department will need to be prepared to monitor their own compliance. A thorough knowledge of the provisions of the IGA will be necessary to monitor compliance.

Before determining whether an IGA contract "is in proper form," the County Attorney's Office will answer any questions or concerns the public agency has about the contract. It is the responsibility of the public agency or department submitting the IGA for review to ask any specific questions or address any concerns it has about the IGA to the County Attorney's Office at the same time they submit the IGA for review. Making such an inquiry also helps improve the County Attorney's Office review of the IGA because it will help focus the review on specific issues that are of greatest concern to the public agency. Failing to make such an inquiry when the agency does have issues or concerns will decrease the ability of the County Attorney's Office to meaningfully review the IGA.

**ARF-1018** **Consent Agenda Item 5- G**

**Regular BOS Meeting**

**Meeting Date:** 01/10/2012

Submitted For: Linda Eastlick, Elections Director

Submitted By: David Rogers, Elections Specialist, Elections Department

Department: Elections Department

Presenter's Name:

---

## Information

### Request/Subject

Accept Governor Janice K. Brewer's proclamation for the February 28, 2012, Presidential Preference Election.

### Background Information

Section 16-241(B), Arizona Revised Statutes, provides that the Governor shall transmit a copy of the election proclamation to the Clerk of the County Board of Supervisors.

### Evaluation

Prior to each Presidential Preference Election, the Gila County Elections Director presents the Board of Supervisors with notification that she has received the Governor's Proclamation proclaiming the Presidential Preference Election for that particular year.

### Conclusion

Gila County has received an official copy of the Governor's Proclamation for the February 28, 2012, Presidential Preference Election.

### Recommendation

The Elections Director recommends the Board's acceptance of the Governor's Proclamation.

### Suggested Motion

Acceptance of Governor Janice K. Brewer's Proclamation for the February 28, 2012, Presidential Preference Election.

---

## Attachments

A.R.S. 16-241

Governor's Proclamation

16-241. Presidential preference election; conduct of election

A. A presidential preference election shall be held on the fourth Tuesday in February of each year in which the president of the United States is elected to give qualified electors the opportunity to express their preference for the presidential candidate of the political party indicated as their preference by the record of their registration. No other election may appear on the same ballot as the presidential preference election.

B. Notwithstanding subsection A of this section, the governor may issue a proclamation that the presidential preference election is to be held on a date earlier than the fourth Tuesday in February. The proclamation shall be issued no later than one hundred fifty days before the date of the election as set forth in the proclamation. The governor shall transmit a copy of the election proclamation to the clerk of the county boards of supervisors.

C. Except as otherwise provided in this article, the presidential preference election shall be conducted and canvassed in the same manner as prescribed in this title for the primary election held pursuant to section 16-201. All provisions of other laws that govern elections and that are not in conflict with this article apply to a presidential preference election, including laws relating to registration and qualifications of electors.

D. Unless otherwise specifically prescribed by this article, the powers and duties conferred by law on boards of supervisors, officers in charge of elections, county recorders, precinct boards and central counting boards in connection with a primary election are conferred on those persons for purposes of a presidential preference election and shall be exercised by them for a presidential preference election.

E. Every act that is an offense pursuant to the election laws of this state is an offense for purposes of a presidential preference election, and a person is subject to the penalties prescribed by those laws.

Janice K. Brewer
Governor

# Office of the Governor

**PROCLAMATION**

**2012 Presidential Preference Election**

**WHEREAS,** 2012 is a presidential election year in the United States of America;

**WHEREAS,** Arizona is at the forefront of reviving federalism and advancing solutions to national issues such as illegal immigration and border security, Medicaid spending and the fiscal crisis facing governments throughout the country; and

**WHEREAS,** pursuant to Arizona Revised Statute § 16-241(A) and (B), Arizona's presidential preference election is to be held on the fourth Tuesday in February of a presidential election year, unless the Governor decides to hold the presidential preference election on an earlier date.

**NOW, THEREFORE,** I, Janice K. Brewer, Governor of the State of Arizona, by virtue of the authority vested in me by the Arizona Constitution and laws of the State of Arizona, do hereby proclaim and order that Arizona's 2012 Presidential Preference election shall remain on the fourth Tuesday in February and be held on February 28, 2012.

**IN WITNESS WHEREOF**, I have hereunto set my hand and caused to be affixed the Great Seal of the State of Arizona.

Janice K. Brewer
**GOVERNOR**

**DONE** at the Capitol in Phoenix at this 12th day of September in the Year Two Thousand and Eleven and of the Independence of the United States of America the Two Hundred and Thirty-Sixth.

**ATTEST:**

Ken Bennett
**SECRETARY OF STATE**

**ARF-1020** **Consent Agenda Item 5- H**

**Regular BOS Meeting**

**Meeting Date:** 01/10/2012

Submitted For: Linda Eastlick, Elections Director

Submitted By: David Rogers, Elections Specialist, Elections Department

Department: Elections Department

Presenter's Name:

---

Information

Request/Subject

February 28 Presidential Preference Election Precinct Consolidation Plan Order

Background Information

ARS 16-248 provides not less than twenty days before a presidential preference election, the board of supervisors shall designate a reasonable and adequate number of polling places where the election shall be held. Further the statute provides counties with less than two hundred thousand active registered voters shall determine the number of polling places for this election by using no more than one polling place for every two thousand active registered voters. This does not apply to land located on an Indian reservation. In precincts that contain fewer than three hundred active registered voters, the election may be conducted by mail.

Evaluation

The recommended Precinct Consolidation Plan was developed taking into consideration those precincts which could be conducted by mail (Hayden, Winkelman, Christmas, Roosevelt, Sierra Ancha, Whispering Pines, Zane Gray, Gisela, and Young); maintaining polling places in those areas where travel to a consolidated precinct would place a burden on the voter (Tonto Basin, Star Valley, and Pine-Strawberry); those precincts located on reservation lands (Canyon Day, Carrizo, San Carlos); and the number of registered voters in areas which could be consolidated (Globe, Miami, Central Heights, Claypool, and Payson).

Conclusion

All precincts in Gila County were evaluated according to ARS 16-248 and a determination was made as to the best Precinct Consolidation Plan to use for the 2012 Presidential Preference Election.

Recommendation

The Elections Director recommends the board’s acceptance of the Order to adopt the February 28, 2012, Presidential Preference Election Precinct Consolidation Plan Order

Suggested Motion

Approval of the February 28, 2012, Presidential Preference Election Precinct Consolidation Plan designating precinct consolidations, polling place locations, and mail ballot precincts with ballot replacement sites.

---

Attachments

A.R.S. 16-248

2012 PPE Polling Place Consolidation Plan

16-248. Designation of polling places

A. Not less than twenty days before a presidential preference election, the board of supervisors shall designate a reasonable and adequate number of polling places where the election shall be held.

B. The number of polling places for the presidential preference election is to be determined according to the number of active registered voters as of January 1 of the year of the presidential preference election.

C. Each county with two hundred thousand or more active registered voters shall determine the number of polling places for the presidential preference election by using no more than one-half of the number of precincts as of January 1 of the year of the presidential preference election.

D. Each county with less than two hundred thousand active registered voters but ten thousand or more active registered voters shall determine the number of polling places for the presidential preference election by using no more than one polling place for every two thousand active registered voters as of January 1 of the year of the presidential preference primary.

E. Each county with less than ten thousand active registered voters shall determine the number of polling places for the presidential preference election by using no more than one polling place for every one thousand active registered voters as of January 1 of the year of the presidential preference election.

F. If it is determined by the secretary of state that compliance with state and federal regulations would be jeopardized, the secretary of state has the authority to release a county from the number of polling places prescribed by this section.

G. This section does not apply to land located on an Indian reservation.

H. In precincts that contain fewer than three hundred active registered voters, the officer in charge of elections may conduct a presidential preference election by mail.

# ORDER

It is hereby Ordered by the Board of Supervisors of Gila County, that the following precinct consolidations, polling place locations, and mail ballot precincts with ballot replacement sites are hereby designated for use during the Presidential Preference Election to be held in Gila County, Arizona on Tuesday, February 28, 2012:

District No. 1
Globe-Miami Chamber of Commerce
Globe #1, #2, #3, #4, #5, #6, #7, #8, #11, and East Globe Precincts

District #2
St Paul's Lutheran Church
Miami #1 and #3, Central Heights, Claypool #1, #2, and #3 Precincts

District 3
Tonto Basin Chamber of Commerce
Tonto Basin Precinct

District No. 4
St. Philip's Catholic Church
Payson #1, #2, and #6 Precincts

District No. 5
Payson Public Library
Payson #3, #7, and #8 Precincts

District No. 6
Best Western Payson Inn
Payson #4 and #5 Precincts

District No. 7
Star Valley Southern Baptist Church
Star Valley Precinct

District No. 8
First Baptist Church of Pine
Pine-Strawberry Precinct

District No. 9
Canyon Day Junior High
Canyon Day Precinct

District No. 10
Carrizo Assembly of God Church
Carrizo Precinct

District No. 11
Rice Gym
San Carlos Precinct

District No. 12
Hayden Town Hall Ballot Replacement Site
Christmas Precinct - Mail Ballot

District No. 13
Gisela Valley Community Center Ballot Replacement Site
Gisela Precinct - Mail Ballot

District No. 14
Hayden Town Hall Ballot Replacement Site
Hayden Precinct

District No. 15
Roosevelt Baptist Church Ballot Replacement Site
Roosevelt Precinct - Mail Ballot

District No. 16
Roosevelt Baptist Church Ballot Replacement Site
Sierra Ancha Precinct - Mail Ballot

District No. 17
Whispering Pines Fire Station Ballot Replacement Site
Whispering Pines Precinct - Mail Ballot

District No. 18
Hayden Town Hall Ballot Replacement Site
Winkelman Precinct - Mail Ballot

District No. 19
Pleasant Valley Community Center Ballot Replacement Site
Young Precinct - Mail Ballot

District No. 20
Christopher Creek Bible Fellowship Church Ballot Replacement Site
Zane Grey Precinct - Mail Ballot

DATED this 10th day of January, 2012, at Globe, Gila County, Arizona.

Gila County Board of Supervisors

_____
Tommie C. Martin, Chairman

Attest:

_____
Marian Sheppard, Chief Deputy Clerk

**ARF-1015** **Consent Agenda Item 5- I**

**Regular BOS Meeting**

**Meeting Date:** 01/10/2012

Submitted For: Mike Pastor, Member, Board of Supervisors

Submitted By: Sherry Grice, Supervisor's Staff Specialist, Board of Supervisors-District 2

Department: Board of Supervisors-District 2

Presenter's Name: District II Supervisor Michael Pastor

---

## Information

### Request/Subject

Gila County Personnel Commission Board Member Resignation and Replacement

### Background Information

The Gila County Personnel Commission Current Members: Jonathan Barber; Mitch Malkovich; Ken Volz; Tom Moody; and Ophelia James.

Appointing Authority: Gila County Board of Supervisors

### Evaluation

Mr. Malkovich was appointed by the late District II Supervisor, Edward "Bunch" Guerrero. Current District II Supervisor, Michael Pastor has nominated Jerry McCreary as his replacement.

### Conclusion

N/A

### Recommendation

It is the recommendation of Supervisor Michael Pastor to appoint Jerry McCreary to the Gila County Personnel Commission to replace Mr. Malkovich.

### Suggested Motion

Acknowledgment of the resignation of Mitch Malkovich from the Gila County Personnel Commission at the completion of his term as of December 31, 2011, and approval of the appointment of Jerry McCreary as Mr. Malkovich's replacement for a term of 4 years from January 1, 2012, through December 31, 2015.

---

## Attachments

Malkovich Resignation

Jerry McCreary Appointment

Proposed Personnel Commission Membership List 1-10-12

December 2, 2011

Michael A. Pastor
Gila County Board of Supervisors
District II
1400 E. Ash Street
Globe, Arizona 85501

RECEIVED
DEC 6 2011
GILA COUNTY - DISTRICT II
BOARD OF SUPERVISORS

Re: Re-Appointment to Gila County Personnel Commission

Dear Michael,

This letter is to inform you that I will no longer seek reappointment by you as a member of the Gila County Personnel Commission. My current 4-year term expires December 31, 2011.

Having been originally appointed to the Commission by District II Supervisor Edward (Bunch) Guerrero I have enjoyed working with the Personnel Commission, and the County, and will miss it. I feel however that due to my current involvement as Board Chairman of the Tri-City Fire District, Board Member of the Tri-City Regional Sanitary District, and the City of Globe Fire Department Retirement Board, my available time when necessitated becomes an issue.

Please know that I appreciate your consideration of reappointing me to this position and if and when I can be of further assistance on anything in the future, I am open for consideration of such.

Respectfully,

Mitchell Malkovich
4321 E.Broadway
Claypool, Arizona 85532

Cc: Berthan DeNero, Human Resources Director

**Tommie C. Martin, District I**
610 E. Hwy 260, Payson, 85547
(928) 474-2029
tmartin@gilacountyaz.gov

**Michael A. Pastor, District II**
(928) 402-8753
mpastor@gilacountyaz.gov

**Shirley L. Dawson, District III**
(928) 402-8511
sdawson@gilacountyaz.gov

# GILA COUNTY
**BOARD OF SUPERVISORS**
1400 E. Ash Street
Globe, Arizona 85501

**Don E. McDaniel, Jr.,**
**County Manager**
(928) 425-3231
dmcdaniel@gilacountyaz.gov

**John F. Nelson,**
**Deputy County Manager/**
**Clerk of the Board of Supervisors**
(928) 402-8754
jnelson@gilacountyaz.gov

December 13, 2011

Gila County Clerk of the Board
1400 E Ash Street
Globe, AZ 85501

RE: Personnel Commission Member Resignation and Replacement

To Whom It May Concern:

Mitchell Malkovich has forwarded to me a copy of his letter of resignation as a member of the Gila County Personnel Commission. As you know, his current 4-year term will end on December 31, 2011. Mr. Malkovich was originally appointed to the Commission by late District II Supervisor, Edward "Bunch" Guerrero.

At this time I would like to take this opportunity to recommend Mr. Jerry McCreary, and ask that the Board of Supervisors appoint him as Mr. Malkovich's replacement.

Respectfully,

Michael A. Pastor
District Two Supervisor

*MP/slg*

GILA COUNTY PERSONNEL COMMISSION

(Proposed to BOS on 1/10/12, and if approved the list will be as follows)

| NAME OF MEMBER | TYPE OF APPOINTMENT<br><br>Mark with A, B, C, D or E – see below | NEW APPOINTMENT OR REAPPOINTMENT<br>(Include BOS approval date next to letter)<br><br>New Appointment: Choose "A" or "B"<br>A -for existing vacancy or<br>B -to fill a vacancy created by (provide name)<br>or<br>Reappointment: Mark with a "C" and include number of years served prior to most recent appointment | | DATES OF TERM<br>(Put the month, day and year both beginning & ending dates) | LENGTH OF TERM FOR CURRENT APPOINTMENT<br>(# of years) |
|---|---|---|---|---|---|
| Jonathan Barber | B | C (12/15/09) | 3 years, 3 months | 01/01/10–12/31/13 | 4 |
| ~~Mitch Malkovich~~ | ~~B~~ | ~~C (05/06/08)~~ | ~~6 years, 9 months~~ | ~~01/01/08–12/31/11~~ | ~~4~~ |
| Ken Volz | B | C (11/15/11) | 4 years | 01/01/12–12/31/15 | 4 |
| Tom Moody | B | C (12/15/09) | 9 months | 01/01/10–12/31/13 | 4 |
| Ophelia James | B | C (12/15/09) | 3 years, 6 months | 01/01/10–12/31/13 | 4 |
| Jerry McCreary | B | A(01/01/12) | ---------- | 01/01/12-12/31/15 | 4 |
| | | | | | |
| | | | | | |
| | | | | | |
| | | | | | |

Appointment Designation Definitions:

A) Statutory District Appointment: Member must reside within the supervisorial district boundary from which he/she is appointed.

B) Supervisor Appointment: Member unrestricted by district.

C) Joint Appointment: Membership is comprised of appointments from different jurisdictions. Appointments made by other entities are acknowledged by the Board of Supervisors.

D) County at Large: Members are unrestricted by district and can be recommended by appointment by any supervisorial district or by the committee.

E) Alternate Members: As defined by individual committee criteria.

**ARF-1033** **Consent Agenda Item 5- J**

**Regular BOS Meeting**

**Meeting Date:** 01/10/2012

Submitted By: Marian Sheppard, Chief Deputy Clerk, BOS, Clerk of the Board of Supervisors

Department: Clerk of the Board of Supervisors

Presenter's Name:

---

Information

Request/Subject

Approval of two membership lists: one for the Arizona Correctional Officers Retirement Plan (CORP) Local Board of Directors for Gila County Sheriff's Office (GCSO) Detention Officers & Non-Uniformed Officers; and one for Arizona CORP Local Board of Directors for GCSO Dispatchers.

Background Information

On April 10, 2001, the Board of Supervisors (BOS) adopted Resolution No. 01-03-07 authorizing preliminary steps to be taken by the Gila County Sheriff's Office (GCSO) to become a participating employer in the Arizona Corrections Officers Retirement Plan (CORP) on behalf of its Detention Officers.

On September 9, 2003, the BOS authorized the inclusion of GCSO Dispatchers and Detention Officers into the CORP.

On September 23, 2003, the BOS adopted Resolution Nos. 03-09-03, 03-09-04, 03-09-05 and 03-09-06, and approved two separate Joinder Agreements between the GCSO and the CORP; one Joinder Agreement for Detention Officers and one for Dispatchers.

On March 16, 2004, the BOS adopted Resolution Nos. 04-03-01 and 04-03-02, which allowed Gila County to enter into two Joinder Agreements on behalf of the GCSO full-time Detention Officers, Detention Medical Staff, and Dispatchers and approved 2 Amendments to Joinder Agreements to change the effective date of the Agreement to 3/22/04 for Dispatchers, and change the effective date to 3/22/04, and add Detention Medical Staff to the other Agreement.

On May 20, 2004, the BOS adopted Resolution No. 04-04-04 authorizing the GCSO to enter into a Joinder Agreement with the Arizona CORP for full-time Detention Officers and Non-Uniformed Employees of the GCSO, and to authorize the signing of an Amendment to the Joinder Agreement of 9/22/03, which was revised on 4/7/04. (This was the 2nd revision for both the Resolution and the Amendment to the Joinder Agreement. Resolution No. 04-04-04 will supersede previously adopted Resolution Nos. 03-09-03 and 04-03-01. The purpose for revising these documents was to change the name from Detention Medical Staff to Non-Uniformed Employees of the GCSO whose primary duties require direct contact with inmates.

On August 16, 2004, the Gila County Board of Supervisors approved the appointments and acknowledged the elected members of the Arizona CORP Local Board for Detention Officers and Non-Uniformed Officers, and the Arizona CORP Local Board for Dispatchers.

Evaluation

Since the initial appointments and acknowledgement of elected members of the two Arizona CORP Local Boards that took place on August 16, 2004, there have been changes in the membership for both Local Boards; however, over time these Boards were not being represented according to Arizona Revised Statutes, which is to have the BOS Chairman act as the Chairman of each Local Board; for the BOS Chairman with the overall approval of the BOS members to appoint 2 other members, represented as "Citizens" to each Board of which one Citizen must be the head of the Gila County Personnel Commission; and for the BOS to acknowledge the remaining two members, represented as "Elected Members", who are elected by the Plan members of each Local Board.

Conclusion

The membership for the Arizona CORP Local Board for Detention Officers and Non-Uniformed Officers; and the membership for the Arizona CORP Local Board for Dispatchers is now in compliance with A.R.S. 38-893.

A.R.S. 38-893 (B) specifices that the initial term for one of the CITIZENS and one of the ELECTED MEMBERS must be two years (in order to have staggered terms.) Thereafter when that term is up and as a vacancy occurs, an office shall be filled for a term of four (4) years in the same manner as the previous members were appointed and/or elected.

Recommendation

It is recommended that the BOS approve two proposed membership lists (attached to this agenda item) for the Arizona CORP Local Board for Gila County Sheriff's Office Detention Officers and Non-Uniformed Officers; and for the Arizona CORP Local Board for Gila County Sheriff's Office Dispatchers.

Suggested Motion

Approval of the corrected and current membership lists for the Arizona Correctional Officers Retirement Plan (CORP) Local Board for Gila County Sheriff's Office Detention Officers and Non-Uniformed Officers; and for the Arizona CORP Local Board for Gila County Sheriff's Office Dispatchers.

---

Attachments

Arizona CORP Local Board for Detention Officers and Non-Uniformed Officers of the Gila County Sheriff's Office

Arizona CORP Local Board for Dispatchers of the Gila County Sheriff's Office

CORRECTIONAL OFFICERS RETIREMENT PLAN LOCAL BOARD OF DIRECTORS –
FOR GILA COUNTY SHERIFF'S OFFICE DETENTION OFFICERS & NON-UNIFORMED OFFICERS
(Proposed to BOS on 1/10/12, and if approved the list will be as follows)

| NAME OF MEMBER (Also include supervisorial district if a member is representing a certain one.) | TYPE OF APPOINTMENT<br><br>Mark with A, B, C, D or E – see below | NEW APPOINTMENT OR REAPPOINTMENT (Include BOS approval date next to letter)<br>New Appointment: Choose "A" or "B"<br>A -for existing vacancy or<br>B -to fill a vacancy created by (provide name)<br>or<br>Reappointment: Mark with a "C" and include number of years served prior to most recent appointment | | DATES OF TERM (Put the month, day and year both beginning & ending dates) | LENGTH OF TERM FOR CURRENT APPOINTMENT (# of years) |
|---|---|---|---|---|---|
| Mike Pastor (represented as the BOS CHAIRMAN with the overall approval of the BOS) | B | A (01/10/12) | - | 01/10/12-01/09/16 | 4 |
| Ophelia James (represented as a CITIZEN and this member needs to be the head of the Gila County Personnel Commission, and with the overall approval of the BOS) | B | A (01/10/12) | - | 01/10/12-01/09/14 | 2 |
| Ed Carpenter (represented as a CITIZEN with the overall approval of the BOS. Ed's term expired 11/01/10, so the BOS needs to reappoint him retroactively from 11/02/10 to 11/01/14 for another 4-year term) | B | C (01/10/12) | 7 years | 11/02/10-11/01/14 | 4 |
| Swede Carlson (represented as an ELECTED MEMBER by the members of the Plan, and the BOS needs to officially "acknowledge" said member) | C | C (01/10/12) | 7 years | 04/08/10-04/07/12 (Swede was reelected by Plan members for this term; however, at that time his membership was never officially acknowledged by the BOS) | 2 |

| | | | | | |
|---|---|---|---|---|---|
| Richard Hobson (represented as an ELECTED MEMBER by the members of the Plan, and the BOS needs to officially "acknowledge" said member) | C | A (01/10/12) | - | 04/08/10-04/07/14 (Richard was elected by Plan members for this term; however, at that time his membership was never officially acknowledged by the BOS) | 4 |

Appointment Designation Definitions:

A) Statutory District Appointment: Member must reside within the supervisorial district boundary from which he/she is appointed.

B) Supervisor Appointment: Member unrestricted by district.

C) Joint Appointment: Membership is comprised of appointments from different jurisdictions. Appointments made by other entities are acknowledged by the Board of Supervisors. [Per A.R.S. §38-893(A)(2), 3 members are to be appointed by the BOS Chairman (1 as Chairman of this Local Board and the other 2 as Citizens of this Local Board) with the overall approval of the other 2 BOS members, and 2 members are elected by secret ballot by Plan members, and their membership is officially "acknowledged" by the BOS.]

D) County at Large: Members are unrestricted by district and can be recommended by appointment by any supervisorial district or by the committee.

E) Alternate Members: As defined by individual committee criteria.

CORRECTIONAL OFFICERS RETIREMENT PLAN LOCAL BOARD OF DIRECTORS –
FOR GILA COUNTY SHERIFF'S OFFICE DISPATCHERS
(Proposed to BOS on 1/10/12, and if approved the list will be as follows)

| NAME OF MEMBER (Also include supervisorial district if a member is representing a certain one.) | TYPE OF APPOINTMENT<br><br>Mark with A, B, C, D or E – see below | NEW APPOINTMENT OR REAPPOINTMENT (Include BOS approval date next to letter)<br>New Appointment: Choose "A" or "B"<br>A -for existing vacancy or<br>B -to fill a vacancy created by (provide name)<br>or<br>Reappointment: Mark with a "C" and include number of years served prior to most recent appointment | | DATES OF TERM (Put the month, day and year both beginning & ending dates) | LENGTH OF TERM FOR CURRENT APPOINTMENT (# of years) |
|---|---|---|---|---|---|
| Mike Pastor (represented as the BOS CHAIRMAN with the overall approval of the BOS) | B | A (01/10/12) | - | 01/10/12-01/09/16 | 4 |
| Ophelia James (represented as a CITIZEN and this member needs to be the head of the Gila County Personnel Commission, and with the overall approval of the BOS) | B | A (01/10/12) | - | 01/10/12-01/09/14 | 2 |
| Ed Carpenter (represented as a CITIZEN with the overall approval of the BOS. Ed's term expired 11/01/10, so the BOS needs to reappoint him retroactively from 11/02/10 to 11/01/14 for another 4-year term) | B | C (01/10/12) | 7 years | 11/02/10-11/01/14 | 4 |
| Lyndi Lopez (represented as an ELECTED MEMBER by the members of the Plan, and the BOS needs to officially "acknowledge" her membership retroactively from 04/08/10 to 04/07/12 | C | A (01/10/12) | - | 04/08/10 –04/07/12 | 2 |

| | | | | | |
|---|---|---|---|---|---|
| for a 2-year term) | | | | | |
| Chadwick Peters (represented as an ELECTED MEMBER by the members of the Plan, and the BOS needs to officially "acknowledge" his membership retroactively from 04/08/10 to 04/07/12 for a 2-year term) | C | A (01/10/12) | - | 04/08/10-04/07/14 | 4 |

Appointment Designation Definitions:

A) Statutory District Appointment: Member must reside within the supervisorial district boundary from which he/she is appointed.

B) Supervisor Appointment: Member unrestricted by district.

C) Joint Appointment: Membership is comprised of appointments from different jurisdictions. Appointments made by other entities are acknowledged by the Board of Supervisors. (Per A.R.S. §38-893(A)(2), 3 members are to be appointed by the BOS Chairman (1 as Chairman of this Local Board and the other 2 as Citizens of this Local Board) with the overall approval of the other 2 BOS members, and 2 members are elected by secret ballot by Plan members, and their membership is officially "acknowledged" by the BOS.)

D) County at Large: Members are unrestricted by district and can be recommended by appointment by any supervisorial district or by the committee.

E) Alternate Members: As defined by individual committee criteria.

**ARF-989** **5- K**

**Regular BOS Meeting**

**Meeting Date:** 01/10/2012

**Reporting Period:** Human Resources weekly reports for the month of December 2011

**Submitted For:** Berthan DeNero

**Submitted By:** Erica Raymond, Human Resources Assistant, Human Resources

---

## Information

**Subject**

Human Resources weekly reports for the month of December 2011.

**Suggested Motion**

Acknowledgement of the Human Resources weekly reports for all personnel action items approved by the County Manager for the month of December 2011, as follows: December 6, 2011, December 13, 2011, December 20, 2011, December 27, 2011.

---

## Attachments

12/06/11 Human Resources Report

12/13/11 Human Resources Report

12/20/11 Human Resources Report

12/27/11 Human Resources Report

December Human Resources Summary Report

**HUMAN RESOURCES ACTION ITEMS**
**DECEMBER 6, 2011**

DEPARTURES FROM COUNTY SERVICE:

1. Colleen Valencia – Clerk of the Superior Court – Court Clerk – 11/21/11 – Drug Enforcement Fund – DOH 10/20/11 – Services no longer needed

DEPARTMENTAL TRANSERS:

2. Michelle Lynn Duarte – From Payson Justice Court – To Clerk of the Superior Court – From Justice Court Clerk – To Courtroom Clerk – 12/12/11 – General Fund

**SHERIFF'S PERSONNEL ACTION ITEMS**

DEPARTURES FROM COUNTY SERVICE:

3. Johnna Kemper – Sheriff's Office – Deputy Sheriff – 11/21/11 – General Fund – DOH 01/27/92 – Retirement

**HUMAN RESOURCES ACTION ITEMS**
**DECEMBER 13, 2011**

DEPARTURES FROM COUNTY SERVICE:

1. Domingo Gonzales – Public Works – Temporary Custodian – 12/01/11 – Facilities Management Fund – DOH 06/08/11 – Services no longer required

TEMPORARY HIRES TO COUNTY SERVICE:

2. Valerie Kaufmann – Community Services – Community Services Worker – 12/15/11 – GEST Fund
3. Faylynn Crook – Community Services – Administrative Clerk – 12/12/11 – Workforce Investment Act Fund

**SHERIFF'S PERSONNEL ACTION ITEMS**

HIRES TO COUNTY SERVICE:

4. Stacey Rachelle Porter – Sheriff's Office – 911 Dispatcher – 12/26/11 – General Fund – Replacing Edward McGuire

**HUMAN RESOURCES ACTION ITEMS**
**DECEMBER 20, 2011**

DEPARTURES FROM COUNTY SERVICE:

1. Nancy Hannigan – Probation – Juvenile Detention Shift Supervisor – 12/7/11 – General Fund – DOH 04/13/09 – Resignation
2. JoAnn Perea – Probation – Juvenile Detention Officer – 11/29/11 – General Fund – DOH 08/21/02 – Resignation
3. Cecilia Pat Wentz – Public Works – Administrative Assistant – 01/30/12 – Public Works Fund – DOH 05/17/93 - Retirement

HIRES TO COUNTY SERVICE:

4. Karrie Schaal – Probation – Administrative Clerk Sr. – 12/27/11 – State Aid Enhancement Fund – Replacing Debra Gildersleeve
5. Elizabeth Maupin – County Attorney's Office – Deputy County Attorney (Underfill) – 12/22/11 – General Fund – Replacing Pascal Brown

TEMPORARY HIRES TO COUNTY SERVICE:

6. Mary Jane Rogers – Community Services – Community Services Worker – 12/22/11 – GEST Fund
7. Nancy Holland – Community Services – Community Services Worker – 12/22/11 – GEST Fund

END PROBATIONARY PERIOD:

8. Virginia E. Mounce – Treasurer's Office – Treasurer's Service Assistant – 10/25/11 – General Fund
9. Michael O'Driscoll – Health and Emergency Services – Director of Health and Emergency Services – 01/05/12 – Various Funds

**SHERIFF'S PERSONNEL ACTION ITEMS**

DEPARTMENTAL TRANSFERS:

10. Lisa Modglin – Sheriff's Office – From 911 Dispatcher – To I.T. Administrator and Support Sr. (Underfill) – 11/21/11 – General Fund

END PROBATIONARY PERIOD:

11. Amber Terees Warden – Sheriff's Office – Accounting Clerk Specialist – 12/27/11 – General Fund
12. Johnnie Everett Brake – Sheriff's Office – Detention Officer Sgt. (Underfill) – 01/03/12 – General Fund

REQUEST PERMISSION TO POST:

13. Sheriff's Office – Deputy Sheriff – Vacated by Doreen Spychala – Date Vacated 01/29/11

**HUMAN RESOURCES ACTION ITEMS**
**DECEMBER 27, 2011**

DEPARTMENTAL TRANSFERS:

1. Kay St. Laurent – From Clerk of the Superior Court – To Superior Court, Division One – From Courtroom Clerk – To Judicial Assistant – 01/02/12 – General Fund

END PROBATIONARY PERIOD:

2. Thomas Kaufman – Public Works – Building Maintenance Technician – 01/02/12 – Facilities Maintenance Fund

POSITION REVIEW:

3. Deloris Rascon – Probation – Juvenile Detention Shift Supervisor – 12/20/11 – One step increase, completed 6 months of service

REQUEST PERMISSION TO POST:

4. Public Works – Temporary Custodian – Vacated by Domingo Gonzales – Date Vacated 11/30/11

Summary Dec-11

# Human Resources Action Items

| | |
|---|---|
| DEPARTURES FROM COUNTY SERVICE | 6 |
| HIRES TO COUNTY SERVICE | 3 |
| TEMPORARY HIRES TO COUNTY SERVICE | 4 |
| VOLUNTEERS TO COUNTY SERVICE | |
| DEPARTMENTAL TRANSFERS | 4 |
| END PROBATIONARY PERIOD | 6 |
| POSITION REVIEW | 1 |
| REQUEST PERMISSION TO POST | 2 |
| Total HR Action Items | 26 |

**ARF-1014** **5- L**

**Regular BOS Meeting**

**Meeting Date:** 01/10/2012

**Reporting Period:** March 29, 2011, April 5, 2011, May 17, 2011, & May 31, 2011, BOS Meeting Minutes; and September 20, 2011, BOE Meeting Minutes

**Submitted For:** Marilyn Brewer, Deputy Clerk, BOS **Submitted By:** Marilyn Brewer, Deputy Clerk, BOS, Clerk of the Board of Supervisors

---

## Information

### Subject

March 29, 2011, April 5, 2011, May 17, 2011, and May 31, 2011, BOS Meeting Minutes; and September 20, 2011, BOE Meeting Minutes.

### Suggested Motion

Approval of the March 29, 2011, April 5, 2011, May 17, 2011, and May 31, 2011, BOS meeting minutes; and September 20, 2011, BOE meeting minutes.

---

## Attachments

BOS 03-29-11 Meeting Minutes

BOS 04-05-11 Meeting Minutes

BOS 05-17-11 Meeting Minutes

BOS 05-31-11 Meeting Minutes

BOE 09-20-11 Meeting Minutes

**BOARD OF SUPERVISORS MINUTES**
**GILA COUNTY, ARIZONA**

Date: March 29, 2011

| | |
|---|---|
| **MICHAEL A. PASTOR**<br>Chairman | **JOHN F. NELSON**<br>Clerk of the Board |
| **TOMMIE C. MARTIN**<br>Vice-Chairman | By: Marilyn Brewer<br>Deputy Clerk |
| **SHIRLEY L. DAWSON**<br>Member | Gila County Courthouse<br>Globe, Arizona |

---

PRESENT: Michael A. Pastor, Chairman; Tommie C. Martin, Vice-Chairman (via ITV conferencing); Shirley L. Dawson, Supervisor; Don McDaniel, Jr., County Manager; John Nelson, Deputy County Manager (via ITV conferencing); Marian Sheppard, Chief Deputy Clerk; and Bryan Chambers, Chief Deputy County Attorney.

**Item 1 – Call to Order – Pledge of Allegiance**

The Gila County Board of Supervisors met in a work session at 10:00 a.m. this date in the Board of Supervisors hearing room. Don McDaniel led the Pledge of Allegiance.

**Item 2 - Information/Discussion on Gila County's potential application for Arizona Public Service Company's Solar for Schools and Government program funding in coordination with PV Advanced Concepts. (Steve Stratton)**

Steve Stratton, Public Works Division Director, introduced Tom Harris from PV Advanced Concepts (PVAC). Mr. Stratton stated that he and Bob Hickman, Facilities Director, have met with Mr. Harris and reviewed this solar program, and they felt like it was something worthy to bring to the Board for consideration. The program has to do with allowing parking structures to be built in various parking lots of County facilities with solar panels placed on the structures themselves at no cost to the County. Mr. Stratton then called on Mr. Harris to explain the program, which is in conjunction with Arizona Public Service (APS). He also stated that if the Board wishes to look at the next step, it would require the County to apply to APS for the program and then advertise a request for proposals. Mr. Harris explained that the APS fiscal and government program actually had its origins in 2009 and the situation at that time was that private industry could take advantage of tax advantages that the Internal Revenue Service allocated in terms of depreciation and investment tax

credits. Public institutions such as schools and government were unable to take advantage of those tax advantages and as a result were really unable to participate in the solar installation boom. APS was then directed to actually organize a school and government program at the end of 2009 in which they originally filed their response to that in April 2010. The program was recently approved by the Arizona Corporation Commission (ACC) in December 2010 and is just now being rolled out to schools and government. Mr. Harris then gave a PowerPoint presentation on this program. He stated that the program consists of a third party Power Purchase Agreement (PPA) with no up-front cost to the County. It consists of large utility incentives to install solar thereby reducing energy costs from the beginning and throughout the life of the contract. The government target is for low-population counties served by APS. It will be offered on a first come, first serve basis and since every county has at least some level of population they will be fully subscribed for each cycle. There are 2 cycles in the year; the first one closes on April 29, 2011, and the next one closes on August 31, 2011. It's a 3-year program, but it is front loaded for the first 2 years to ensure that APS has on line the capacity it needs by the end of the third year, so there is some sense of urgency to organize quickly. Supervisor Dawson inquired whether Salt River Project (SRP) is also involved. Mr. Harris replied that SRP is a unique institution in that it is not controlled by the ACC (Arizona Corporation Commission) and does not report to the ACC, so it sets its own agenda in terms of renewal energy programs. It has a program that consists of creating a fairly large solar field in the Casa Grande area and then selling the energy to schools to make it look like solar is local to the schools. In this program everything is local to the actual institution it's supporting. Supervisor Dawson inquired whether this is the same program that Tucson Electric is doing per their announcement that they are putting 50,000 feet of roof space on schools and government buildings. Mr. Harris stated that each utility has its own program, and he was not exactly sure what Tucson Electric was doing; however, it would not have a program that is as extensive as this one. Mr. Harris then presented a graph showing that Gila County's population is 52,199 (based on the 2009 census), so Gila County is the second lowest behind La Paz County. Supervisor Dawson inquired if the program was based on population. Mr. Harris replied that the criteria for the incentives are strictly based on population. Vice-Chairman Martin inquired if the solar program with the Payson School District was part of this same program. Mr. Harris stated that the Payson School District program dates back 2 years probably from the school program in 2009 and pre-dates this program; however, this new program is more extensive and more attractive. Mr. Harris explained that in a PPA the county allows a company to install solar power and agrees to buy the energy at rates significantly less than those charged by APS. The typical agreements are 15-20 years, but there are buyout options throughout and it may be a very attractive option to go into the contract for perhaps a 7-year period, and after the 7-year period all of the tax advantages have already been extracted from the program, so some companies would be motivated just to get out of the program, get a good purchase price

and then it would get its energy for free; however, that's not a requirement. The PPA company owns it and therefore they operate it, maintain it, and insure it and are the ones that have to do everything. In terms of the County having to get involved in solar, that's not the case. If something goes wrong, the County would simply call the PPA company, which is very motivated to keep the system up and running because that's how they make their money. There is a very positive relationship between making it work and the ownership. He stated that typically rates start at 10-15% below the utility rates and then escalation rates escalate between 0% and 3%. One of the things that the County would need to reflect on in this whole program is: "What is your expectation of APS rates going forward for the next 20 years?" This program will give the County guaranteed rates for 20 years. Historically rates have increased 4% a year over the last 20 years. Mr. Harris then explained the reasons this program would be good for Gila County, as follows: there are no upfront costs because it's owned by a third party; there would be a positive cash flow every year; it would provide certainty so there's no guess about what APS is going to do for utility rates; it helps stimulate the economy; there's opportunity for ongoing maintenance; it reduces dependence on phosphate fuels; and lastly the County would get covered parking for free. Mr. Stratton stated that the first proposal was to place the solar panels on the roofs of various County buildings; however, that was deemed not allowable because all of the roofs are now in good condition and don't leak, so the parking structure was the second option proposed by PVAC. Mr. Harris stated that he is proposing to put covered parking structures at the Globe Courthouse/Guerrero Complex, the Central Heights (Apache Avenue) building, the Public Works Complex, the Gila County Jail where the solar thermal could be used for hot water heating in the jail operations, the Payson Courthouse, Sheriff's Office and other sites as needed. Mr. Harris showed an aerial photo of the various sites proposed for solar structures explaining that they need to be constructed with a north/south alignment. He then reviewed the proposed system for each site. He stated that the County would not want to cover 100% of its usage, but rather design the system for 85% of its usage. He explained that if the County wanted to do other energy efficiency functions, it wouldn't want to over-generate the solar because the County only gets the wholesale rate, but would still be obligated to pay the solar provider at the full rate. The total of the project would be in the neighborhood of 800kW for just the sites noted. Other sites would add additional capacity. He then moved on to the basic economics usage versus demand. He explained that on an electric bill there are two parts. There's a usage charge, which is the amount of electricity actually used, and then there's a demand charge, which is the maximum electricity used for a 15-minute period in the whole month. Solar will definitely reduce all of the County's usage, the amount that it's designed for, but it can only eliminate a certain part of the demand. He presented a calculation showing that the avoided solar cost is about $.115 and the net cost using a solar PPA is $.085, so for each kW hour that the solar generates, there would be a savings to the County of $.03 cents. Next Mr. Harris reviewed a data slide reflecting the

mathematics of the savings, which showed a 1-year savings of $72,420 per year increasing to $285,248 by the 20th year. He explained the timeline of the project and stated that right now at the end of March, it would be very timely and helpful if the Board approved the application for an incentive to APS. After the incentive is awarded, it would become very clear what the economics were of these projects and there would later be a request to actually approve a commitment to execute a letter of intent for the project. The application is due at the end of April and approval from APS should be received approximately 2 weeks after applying. This would be followed by the selection of a vendor; however, an RFP (Request for Proposals) would have already been issued during the April time frame. Then the Board would enter into a Credit Purchase Agreement with APS and the developer would also need to have an interconnection agreement with APS, which is a fairly straight forward process. Finalization of the actual capacity of the system would be done followed by the installation of the parking structures. The whole project at most is a 12-month period, which cannot be compressed. Mr. Harris concluded his presentation by stating PVA Concepts will be acting as a consultant to the County; however, he will be paid by the company that is actually selected for the bid. If there is no project, then he would not be paid. Mr. Harris stated that he believes that this is a strong program and he is willing to put his time and energy into it under the belief that the program will come to fruition. He stated that PVA Concepts will assist the County in a feasibility study, submitting an application to APS, the RFP process, the final system design and acceptance. Vice-Chairman Martin inquired about the locations and any future construction ideas about the proposed areas for these parking structures. She also questioned whether the County would have to move any of the structures, and if so, if there were any costs to the County; whether the County would have to guarantee a certain date and/or provide a certain square footage for a certain period of time; and the length of time the structures would need to be in place for the County to meet its obligation per this agreement and then could move them. Mr. Stratton stated that there are 2 proposed structures that would need to be discussed if the Board approved this program. One would be building a parking structure on the County-owned 4 Amigos property as there haven't been any plans made for that property and the Board might want to discuss it before putting something there. Another one would be that a portion of one of the structures behind the Courthouse potentially could create a conflict. The other proposed sites would be fine. Mr. Harris stated that the program is a long-term commitment; however, the County would have buyout options explicitly stated in the contract. Also the systems are somewhat portable so if a parking structure needed to be moved, they are steel structures that could be moved; however, there would be a cost associated with it. The interest of the PPA company is to sell power so if it took 2-3 weeks to move a structure to a new parking location, then the company would likely want to be reimbursed, but at the same time they would like to maintain a very positive relationship with the project so there would be some sort of a discussion process. Vice-Chairman Martin also noted that the County owns and operates

a landfill in Star Valley, which possibly could be used as an alternative location for power generation without the covered parking. Chairman Pastor inquired whether Vice-Chairman Martin was referring to ground mount structures at the landfill. Vice-Chairman Martin stated that the cap of the landfill couldn't be pierced; however, a pad could be poured on top of it and go up from there. Mr. Stratton stated that the site certainly would lend itself to somewhat of a solar farm, but the facilities the County has at that particular location wouldn't use that much electricity so he didn't think it would qualify for this particular program. This particular program is to power the County's own facilities and cannot be used to sell excess power back onto the grid. Vice-Chairman Martin inquired whether the County could partner with the Town of Star Valley and provide the Town with electricity to which Mr. Stratton replied that would be a possibility. Supervisor Dawson referred back to the 4 Amigos property and noted that the drawings show that the structures would stay over in the corner away from any potential new building and inquired if there were a certain number of spaces required for feasibility in erecting a parking structure. Mr. Stratton stated that he would like to see the structure repositioned a little bit to leave some space for some potential future building that wouldn't impact the structure, but it would actually enhance a new building in the future if that parking structure was there. It would also provide a barrier to the County's juvenile detention home, which is needed. Mr. Stratton stated that the proposed first tier on the south side against the building is fine; however, the easterly portion of the second one on the south side is where he could see a potential problem and that would probably only shorten the structure by approximately 30 to 40 feet. Mr. Harris stated that the sites shown today were only for concept at this time, but he would get with Mr. Hickman to work out the details and also when the project goes out for an RFP, the contractors are very inventive and could come back with a lot of other suggestions and they would work very closely with County staff. Supervisor Dawson inquired if there were no objections from the Board could the County go ahead and proceed with the program? Mr. Stratton stated that understanding this is work session and the Board cannot vote, he believed that his staff could prepare an RFP administratively and bring it to the Board prior to the end of April for approval. Vice-Chairman Martin requested that "long-term agreement" be explained and that the shortest term of the agreement be explained. Mr. Harris explained that there are buyout options which start at year 7, 10, 15 and 20 years. Vice-Chairman Martin inquired as to the percentage for a buyout at 7 years. Mr. Harris replied that a buyout at 7 years would be on the order of 50%-60%. Vice-Chairman Martin inquired as to the County's total cost to buy it out at 50% in 7 years or whether there would be a square foot cost, in general. Mr. Harris stated that just for working discussions only it is $5/watt. If the County had 1000 watts that would be a $5 million project, so $5 million at half would be $2.5 million at approximately 7 years. Mr. Harris stated that these deals are very highly structured financially and if the County says this is the way it wanted to structure this program, then the people who he is working with are very knowledgeable and could adapt the financing to the County's needs. Mr.

Stratton inquired whether the buyout is based on the initial investment or the wattage at that point and not in the future dollars. Mr. Harris stated, "Yes, technically because it is a capital lease structure, there are statements about it having to be sold at fair market value; however, these prices are an indicator of what PPA believes will be the fair market value." Vice-Chairman Martin inquired if at the end of 20 years it would then be owned by the County and there would be no buyout cost? Mr. Harris stated that the buyout option at the end of 20 years is approximately 1% or something of that nature. Vice-Chairman Martin inquired if there was an advantage for the County to buy out early? Mr. Harris stated, "Only if you've got a lot of money." Vice-Chairman Martin stated, "That's an economic decision and the County would need to look at the situation at that point and say do we want to invest $2.5 million to buy this system, make sure that our energy is now free and what kind of return would we get over the next 15 years?" Mr. Stratton stated that he believes part of the selection of a PPA, if the County does this program, would be based on the buyout prices in 7, 10, 15 & 20 years and the initial investment, and the option that would be most lucrative to the County. Vice-Chairman Martin also added that the cost savings to the County would also be considered. Mr. Stratton agreed and stated that those are questions that could be answered in the review process of the RFPs. Mr. Harris advised that it would be clearly stated in the RFP what the buyout costs would be and any other information the Board needed. Vice-Chairman Martin inquired if the Board directed staff to start the RFP process, whether that would obligate the County in any way. Mr. Stratton replied that it would not obligate the County. The RFP would be going to APS for its approval of putting out an RFP for PPAs to look at the County's system. He stated that the time of obligation would be if the Board accepted an agreement with a PPA to actually put in structures. Vice-Chairman Martin stated, "So today if we just instructed staff to proceed with an RFP that keeps us in the ballpark, but doesn't obligate us?" Bryan Chambers, Chief Deputy County Attorney, stated that he had a question of Mr. Harris. He inquired if this would be an RFP that the County would have to issue requesting proposals to build this here or is this actually an RFP that APS would end up issuing?" Mr. Harris stated that there are 2 key relationships. The first relationship is the one between the County and the PPA provider; the second relationship is between the County and APS. The relationship between the County and APS is on the Credit Purchase Agreement, which states that APS will commit itself to incentives for every kilowatt hour of energy produced. The second agreement is the Power Purchase Agreement (PPA) and that's between the County and the PPA provider. So the RFP will be issued by the County directed to PPA providers, and then simultaneously there will be a request for incentives into the APS system. If those incentives are granted, then the project becomes viable from a PPA perspective and then the County can finalize and make commitments with the PPA company. Mr. Chambers stated, "If this Board was disposed to actually issue an RFP and they were able to do it within this coming month of April would that fit within the timelines as far as getting the RFP issued that would enable this project to go as you stated?" Mr. Harris

replied that technically there is not a requirement to even have an RPF issued ahead of requesting the incentive; however, in order to get the information about these projects to properly apply for these incentives, the correct path is to issue an RFP and get information from that. Mr. Chambers referred back to his initial question and inquired, "If this Board does issue an RFP at its next Board meeting where they actually will take action or the one following that provided that it's in April, will that still enable the Board to move forward on this if they decide to do so?" Mr. Harris replied in the affirmative. Mr. Chambers then stated that typically in RFPs that the County issues, there is always a provision in the RFP that provides that the Board may decide not to issue a contract to any responder to the RFP. The Board always reserves that right. He inquired if the Board would be able to reject all bids in this process if they get proposals back and they are not happy with any of them? Mr. Harris stated that the Board would have that option as that is a normal business practice. Mr. Harris stated that every RFP he's ever seen has said that some or all or none of these projects will actually be constructed based on response, so there is no obligation. Mr. Chambers stated that no Board action could be taken today; however, staff could come back to the Board with a proposed RFP and then the Board would decide whether or not to take action. Mr. Stratton stated that he would have the appropriate agenda item ready for a meeting in April. No action was taken by the Board.

**Item 3 - Information/Discussion regarding Planning and Zoning Department Case No. ZOA-11-01, the adoption of Ordinance No. 11-01, which amends the Gila County Planning and Zoning Ordinance by adding language regarding the use of medical marijuana.**

Bob Gould, Community Development Division Director, stated that the Planning and Zoning (P&Z) Commission had a discussion at its regularly scheduled meeting this month to consider the remanding of this Ordinance by the Board to the P & Z Commission for further review. The P & Z Commission has now made a motion that it wants to continue with its initial recommendation. Mr. Gould stated that the final rules from the Arizona Department of Health Services (ADHS) regarding medical marijuana came out yesterday and he is still reviewing those. One of the rulings is that April 14th is going to be the date when applications can be submitted for the qualified patients and June 1st will be the date that applications will be accepted for dispensaries. He stated that ADHS had previously created what are known as community health analysis areas. Gila County is actually part of 4 different tribes; however, in reality it's just two—the White Mountain Indian Tribe and the San Carlos Indian Tribe, which won't interact with the County. Of the 2 community health analysis areas, one will run from Roosevelt to Strawberry and the other runs from Roosevelt to the Hayden and Winkelman areas. Mr. Gould stated that the one thing that he is most concerned about in the process is that the actual issuing of a dispensary registration is going to be done on a lottery-type format. The ADHS is going to take all of the applications that are

equal in ranking for a specific community health area and they are going to toss them in a hat and have some fanfare and just draw out the winning one. However, the reason that he is concerned is the location issue. It was ideally hoped to be able to cover the maximum percentage of the Gila County population so the County wouldn't have to be concerned about the caregiver growth and the qualified patient growth. However, based upon the system that ADHS is going to be actually implementing, the County could end up having a dispensary in Strawberry, which it is known that an applicant is applying for one in Strawberry, and there could be one in Hayden & Winkelman. That would mean that all of the areas encompassing Globe, Miami, Wheatfields, Claypool, Tonto Basin and everything south of Rye and Gisela would be open for home growth. Mr. Gould stated that hopefully it won't turn out like that, but it is a concern with the overall process. ADHS will issue all qualified patients registration cards first, which means that every single person that gets issued a card up front is going to be qualified to either have a caregiver growth or a qualified patient growth. There won't be any consideration of dispensaries until sometime in June, so people will be able to grow their own marijuana; however, it will be listed on a patient's card whether they accept marijuana through their own growth efforts or through a qualified caregiver. He stated that right now how the Ordinance reads is that the County will limit dispensaries and cultivation for dispensaries in M1 zoning. The County is restricted on the number of lots that are available, but they can still rezone. One of the complaints received out of Strawberry at the last P & Z Commission meeting was from a couple of people who were looking at that M1 lot in Strawberry and they were concerned about the location being in residential areas. He noted that there are also quite a few M1 lots in the Globe-Miami area. The Ordinance also requires that dispensaries and cultivation must go through a conditional use permit (CUP) process with the required 1500-foot area notification. Also included in the Ordinance are fees, which will be adopted by the Board at its next meeting. All of the initial fees in the Ordinance had to be removed because under ARS 11-251.13 any new fees must be posted on the County's website for 60 days prior to the Board considering the approval of those fees. Mr. Gould stated that qualified patients will also be required to go through a CUP process and will also require the 1500-foot notification area as well. Caregivers will be required to pay a $5,000 fee; qualified patients will pay a $1,000 fee. Mr. Gould stated that at the last P & Z Commission meeting, he told the members that he expected that requirement to be challenged. The Board of Supervisors will need to talk to its attorney about the issue because there is nowhere in the regulations where it delegates that authority to Mr. Gould or the P & Z Commission. Mr. Gould believes that regulations can be added to the Ordinance stating the land use activities that are illegal. He stated that in reviewing all of the application process for the qualified patient and the caregiver, there's nothing in there stating that ADHS will be asking the qualified patient or the caregiver to give them information on zoning or where they are located. That was another concern that Mr. Gould expressed to the P & Z Commission. Mr. Gould also

expressed concerned about any liability issues with the notice and requirements. Mr. Gould reviewed with the Board a previous example he had given at its last meeting citing how many notices his department would have to send out, which would be almost 400 notices, as well as advertising a notification in the newspaper for a typical lot in a rural area. Mr. Gould reiterated that the Board would have to address this issue with its attorney, as he was concerned about liability issues if anything negative happens on that due to the fact that this is the only place where the Ordinance requires that kind of notification. Chairman Pastor called on Don Ascoli, Chairman of the P & Z Commission. Mr. Ascoli stated that the P & Z Commission reviewed the Ordinance at its last meeting and it was strongly felt that because of this change in the dynamics of the neighborhoods, there would be additional costs to the County so that was part of the reasoning behind the fee structure to cover what they anticipate to be additional costs to the County because of surveillance, police efforts, etc. He stated that after the Board reviewed it and stated some concerns, the P & Z Commission still felt this was the proper approach to take. Chairman Pastor then called on Mickie Nye, a member of the P & Z Commission. Mr. Nye stated that at the last P & Z Commission hearing some questions were raised and he's not sure those individuals received answers to those questions. He stated that the P & Z Commission doesn't know and hasn't been given any advice as to whether or not the sale of marijuana in a dispensary would be a taxable item or a non-taxable item. Also, there were 2 gentlemen from Strawberry who made a presentation to the P & Z Commission about wanting to have a facility in Strawberry. They indicated that they were going to sell marijuana for about $400 per ounce, but they expected it to be sold actually by the gram. When asked about the initial amount of annual sales that was projected in their business plan, they indicated it would be approximately $1.3 million. They also had some concerns about the Ordinance that had been drafted pertaining to the hours and about the 1500-foot requirement. Mr. Nye stated that he believes the P & Z Commission doesn't want these dispensaries near schools, bus stops or churches, so some requirements were included to protect children and the neighborhoods. He stated that there are going to be expenses incurred by the County and noted that the Board was provided with a white paper indicating the issues around these types of facilities. He stated that there is no mechanism in place for the County to assess anything in regard to the costs that are going to be assumed for having these dispensaries in our areas. In the documents received from ADHS, it states that if a dispensary is allowed to be located in the Globe community, the applicant is required to reside in the area for 3 years and at the end of 3 years they can move and then there will be a lottery process to have other people bring dispensaries wherever they want. He stated that the P & Z Commission is trying to get the Ordinance right the first time. The P & Z Commission knows that the fees are expensive, but these caregivers are going to make a lot of money and they felt that this is the only place the County can assess any fees on projected expenses. Supervisor Dawson stated that at the Board's last discussion on this, she was concerned

about the fees, which she has reviewed and contemplated a neighborhood marijuana farm. She believes that the County is right in assessing a fee and that the notifications are really an important part of the process. She stated, "Who knows where Arizona is headed. This is a really difficult step towards legalized marijuana and I cannot imagine how law enforcement is going to be able to reasonably be able to handle this in the broad areas that we have it, and the hard work they have done in finding the farms in our County and where they are located and now to say they have a right to be raising it. At least maybe they will be registered because I think everybody has said that marijuana is a gateway drug and we go from there into worse things." Chairman Pastor stated that he never thought the Board would be sitting here making decisions on medical marijuana in the state of Arizona. Travis Williams, a member of the P & Z Commission, inquired whether Mr. Gould provided the Board with a copy of the police reports and summaries. Mr. Gould stated that he had not done so. Mr. Williams stated that he had reviewed them quite extensively and they contain a lot of eye-opening information that's based on real life experiences. He recommended that the Board and everyone review them. Mr. Williams further stated that in his opinion there will definitely be additional County expenses involved due to enforcement. Mr. Williams agreed with Mr. Nye that this is the only point in time that the County is going to able to get any type of financial support for enforcing these laws and he felt that it should be seriously considered by the Board. Vice-Chairman Martin stated that she wished there was more of an effort across the board for consistency. She stated, "The state just came out with its recommendations and rules and the County hasn't even had time to digest that." Vice-Chairman Martin stated that in this County, she was not aware of any effort to sit down and discuss this with the City of Globe and Town of Payson to see if there couldn't be some consistency within Gila County, much less county to county. She recommended that conversations be held within the County across jurisdictions and with the Sheriff's Office and the local police departments. She believes it is unknown whether the County will even have any jurisdiction on some of these requirements and whether the County needs to have a CUP. She also questioned if the County needed a price, whether it would have the right price. She personally felt like this needed more conversation between all of the parties before the Board takes an action. She stated, "I don't feel like any of us have a clue as to what's coming at us, much less what's the appropriate way to address it. I guess if we do something here we can always change it. The unintended consequences of our actions boggle my mind sometimes." Supervisor Dawson stated that her comment would be along the lines of the unintentional actions of the voters of the state of Arizona. She stated, "This thing is going to go into effect and I appreciate the fact that P & Z has not just had one brief meeting, but has really hashed through this and it's a starting point; it gives us some guidelines. I totally agree with the idea of bringing everyone together and I think of our meeting the other day where we talked about how we need to try to bring these cities and the tribe and everybody together again and see if we can discuss a

multitude of issues and certainly medical marijuana is one that will affect every corner of Gila County. So getting that meeting set up is important, but I don't want to put a burden on our County management or anything as the most important thing for them right now is getting this budget reined in and figure out what the state is going to do to us. And at the same time we have to proceed and move forward. I feel comfortable with what the Commission has come back to us with; that they reconsidered after we suggested. Certainly there will be revisions in the future no doubt. When you're talking about this big a drug cartel business starting out, there will be lawsuits and whether we will be the place where they decide to hit or the state, these people that distribute this drug will be looking for all the freedom that they can possibly have. So we need to have our guidelines in place and if we are told we are wrong, then we'll amend them." Vice-Chairman Martin noted 2 items in the Ordinance that needed to be corrected. On page 9, Conditional Use Permit, the word "conditional" was spelled incorrectly and there needed to be a period after the first "marijuana" word and the establishment of a cultivation. Vice-Chairman Martin stated, "Other than those corrections, this is as good a place to start as any as long as everyone realizes we're just starting." Chairman Pastor stated, "I think the biggest problem with this whole medical marijuana issue is that nobody has any idea where we are going. We have to have some sort of Ordinance to start off with and that's what we're doing. I'm sure it's going to be challenged…We do know that it's a good starting place and open enough to realize that we may have to review this several times in the future." Vice-Chairman Martin stated, "I will take on the responsibility of seeing to it that we, as a County, will address this together with our communities." Chairman Pastor thanked the members of the P & Z Commission for their hard work on the preparation of this Ordinance. He then inquired whether Mr. Chambers had any additional comments. Mr. Chambers recommended that as far as the cost portion for the permits, anticipating that the Board is going to review this at a future meeting where they can take action, it would be a good idea to have some data presented so that the Board can make findings. As an example, the average mail order that would have to go out for the CUP and the cost to send it to 400 residences, if that's the average number of people that would have to be notified. He stated, "I think that would help in the event this is challenged if those findings are made prior to the Ordinance being adopted." He further advised that once ADHS actually issues licenses for dispensaries, if the County doesn't have some ordinance in effect at that point, then it could run the risk of having these entities that get the licenses grandfathered in before an Ordinance is adopted. He stated that the County could have a perfect Ordinance that is enacted afterwards and it wouldn't apply to anyone that gets a license before that point. He also agreed with a lot of the comments that have been made and that once the ordinance was adopted, it could be revised, as it is still unknown exactly what is going to happen. He stated, "It would not be unexpected for the Board to expect to have this come back even after adopting what's been proposed in order to consider legal challenges whether they occur in Gila County or they might also occur somewhere else

and the rulings might affect what is done in Gila County." Vice-Chairman Martin noted that on page 23 of the Ordinance under "Special Uses" number 1A, it states, "Medical marijuana dispensaries for medical marijuana offsite cultivation locations shall not be located within 35 miles of any other medical marijuana dispensaries." She questioned whether that number should be 25 miles. Mr. Gould stated that 35 miles was correct. He explained that the 25-mile rule was an ADHS rule for qualified patients as far as growing marijuana at their home; the 35-mile rule was a Gila County rule because of wanting that maximum separation to be assured of at least having dispensaries separated enough apart from each other to cover a maximum portion of the County. Supervisor Dawson mentioned some articles she read recently regarding the legalization of marijuana and one in particular was about the school districts dealing with employees such as bus drivers who legally supposedly can be under the influence in operating a school bus. She also questioned the County's heavy equipment operators and deputies being under the influence while working. She believes that numerous problems will continue to arise. Mr. Nye stated that he didn't think anyone wanted to prevent somebody who is legally authorized to have marijuana to solve a cancer issue or for other medical reasons or comfort or quality of life, but it was his opinion that if they are going to grow it in Gila County they are either going to do it the County's way or not grow it in Gila County. Vice-Chairman Martin and Chairman Pastor thanked the P & Z Commission for the work and thought they have put in to this endeavor. No action was taken by the Board.

**Item 4 - Information/Discussion on the Arizona Open Meeting Law.**

Mr. Chambers briefly reviewed the Arizona Open Meeting Law with the Board, which he noted he recently presented to the newly formed Gila County Redistricting Committee at its initial meeting, in which some Board members were in attendance, and inquired if the Board had any questions. Supervisor Dawson stated that she believes this law was passed for a specific purpose that has been taken to such an extreme as to what elected officials can do, particularly when it comes to attending social public functions. Mr. Chambers explained that the County has an unwritten policy as do most public bodies in the state of posting a public notice whenever it is known that a majority of a board is going to be together at any function. He stated, "The thought behind that is it alerts the public that we know that a majority is together." However, by way of the notice, it's not going to make the function a public meeting open to the public because there is no agenda and there will be no discussion of any County business. It doesn't create necessarily the right of the public to be there. Mr. Chambers stated that the only caution that he would give is that the Board members have to be very careful when they attend the same social gathering because what any member of a public body holds in common with other members of a public body is the business of that body. It is advisable not to have any discussion about work issues. The other item Mr. Chambers briefly addressed was the public's understanding of the Open Meeting Law.

Mr. Chambers explained that his experience has been that a lot of people kind of understand the essence of it, but once you start getting into the nitty-gritty it gets a little bit more complicated. Oftentimes people will suggest that there was an Open Meeting Law violation, which many times are unfounded simply because they don't totally understand the Law. He stated that because there is not a perfect understanding in the public very often there are allegations made that the meeting has been violated and public bodies end up having to respond to those allegations. He believes that happens as a result of the public's incomplete understanding; however, the public bodies can respond and not every time someone alleges an Open Meeting Law violation is it concluded that there is one. Mr. Chambers then provided examples of ways to avoid violating or the appearance of violating the Open Meeting Law such as Board members not being able to email each other, driving to outside meetings together, etc. Also discussed was attending outside meetings such as County Supervisors Association (CSA) meetings or Central Association of Governments (CAAG) meetings where the Board votes on various issues. Mr. Chambers advised that when the Board attends those meetings, the members are essentially meeting as members of CSA/CAAG; it is not acting as the Board of Supervisors so it is not an official action of Gila County. The final issue discussed was regarding County press releases, which should be issued individually by Board members rather than by the Board if no official previous action has been taken by the Board.

There being no further business to come before the Board of Supervisors, Chairman Pastor adjourned the meeting at 12:12 p.m.

**APPROVED**:

_____

Michael A. Pastor, Chairman

**ATTEST**:

_____

Marian Sheppard, Chief Deputy Clerk

**BOARD OF SUPERVISORS MINUTES**
**GILA COUNTY, ARIZONA**

Date: April 5, 2011

| | |
|---|---|
| **MICHAEL A. PASTOR**<br>Chairman | **JOHN F. NELSON**<br>Clerk of the Board |
| **TOMMIE C. MARTIN**<br>Vice-Chairman | By: Marilyn Brewer<br>Deputy Clerk |
| **SHIRLEY L. DAWSON**<br>Member | Gila County Courthouse<br>Globe, Arizona |

---

PRESENT: Michael A. Pastor, Chairman; Tommie C. Martin, Vice-Chairman (via ITV conferencing); Shirley L. Dawson, Supervisor; Don McDaniel, Jr., County Manager; Marian Sheppard, Chief Deputy Clerk; and Bryan Chambers, Chief Deputy County Attorney.

**Item 1 – Call to Order – Pledge of Allegiance – Invocation**

The Gila County Board of Supervisors met in a regular session at 10:00 a.m. this date in the Board of Supervisors hearing room. Shirley Dawson led the Pledge of Allegiance and Reverend Barbie Morton of the First Christian Church in Globe delivered the invocation.

**Item 2 – PUBLIC HEARINGS:**

**2A. Public Hearing - Information/Discussion/Action to approve Order No. LL-11-03, an application submitted by Marie Ann Petroff for a new Series 13 domestic farm winery license for Pleasant Valley Winery located in Young. (Marian Sheppard)**

Marian Sheppard, Chief Deputy Clerk, stated that for this application, the County conducted an internal review for any health permitting issues or safety building permitting issues of which there were none. She also advised that no negative public comments were received and she recommended approval of the application. She noted that Mr. and Mrs. Petroff were present at the meeting. Chairman Pastor opened the public hearing and called for comments from the public; none were received. He closed the public hearing and entertained a motion. Upon motion by Supervisor Dawson, seconded by Vice-Chairman Martin, the Board unanimously approved Order No. LL-11-03, an application submitted by Marie Ann Petroff for a new Series 13 domestic farm winery license for the Pleasant Valley Winery located in Young.

**Item 3 – REGULAR AGENDA ITEMS:**

**3A. Information/Discussion/Action to adopt Resolution No. 11-04-01 expressing continued support of the Cobre Valley Community Transit program from October 1, 2011, through September 30, 2012.**

Steve Stratton, Public Works Division Director, stated that this is a resolution of support for the Cobre Valley Community Transit program. He advised that there is no commitment of funding at this time as it is known that the Local Transportation Assistance Fund or lottery monies are being swept. Supervisor Dawson commented that she believes this is a very critical program for this area and unfortunately if the funds go away the service will also go away, so she believes that this program needs to carefully watched and supported. Chairman Pastor stated that the Town of Miami went to the Arizona Department of Transportation hearing last week and gave a presentation to the committee that handles the funding or the approval of those programs for all of the communities in Arizona. He stated, "Apparently Jerry Barnes, Miami Town Manager, did a pretty good job because he got some information that the Town of Miami is ranked pretty high in the list of awards." He also believes that this is an important program and encouraged the Board to support the resolution. For informational purposes, Chairman Pastor stated that last year the County requested that the Transit Authority review the Wheatfields area as an extension for transit. A survey was done and a good response was received indicating that there would be ridership in that area, so that may be an addition happening to that transit system in the near future. Upon motion by Vice-Chairman Martin, seconded by Supervisor Dawson, the Board adopted Resolution No. 11-04-01 expressing continued support of the Cobre Valley Community Transit program from October 1, 2011, through September 30, 2012. **(A copy of the Resolution is permanently on file in the Board of Supervisors' Office.)**

**3B. Information/Discussion/Action to adopt Resolution No. 11-04-03, which authorizes the execution of an Intergovernmental Agreement (AG Contract No. P0012011 000387) between Gila County and the State of Arizona, Department of Transportation, at an estimated total project cost of $529,676 for pedestrian sidewalks along Six Shooter Canyon Road in Globe beginning at Remington and running North to Cherokee.**

Mr. Stratton stated that several years ago the County completed an improvement on this stretch of road from the U.S. Forest Service Ranger Station to the Gila County Community College. During those improvements, the need for a sidewalk was identified; however, in trying to stretch available funding as much as possible, the County only completed the critical section of sidewalk in the road contract, which was from Remington Drive up to the College because of problems with retaining walls, right-of-way, etc. The remaining funding was applied for by a grant, which is the item presently before the Board for approval. He stated that the County match for this project will be $30,192 and will be paid from the half cent sales tax dedicated to

transportation. Chairman Pastor inquired if the survey had been completed as noted in the Intergovernmental Agreement. Mr. Stratton replied that the area was originally surveyed when the road work was done and this survey is part of the scoping of the project and the survey of environmental. It will have to be designed with some points picked up for the designer, but the original plans for the road work were built to plan so they can also be utilized. Chairman Pastor inquired if that would require another design study. Mr. Stratton replied that the design work for the sidewalks will be put out for bids rather than being done in-house and will have to be done before the County goes out for Requests for Qualifications for the project. Upon motion by Supervisor Dawson, seconded by Vice-Chairman Martin, the Board unanimously adopted Resolution No. 11-04-03, which authorizes the execution of an Intergovernmental Agreement (AG Contract No. P0012011 000387) between Gila County and the State of Arizona, Department of Transportation (ADOT), at an estimated total project cost of $529,676 for pedestrian sidewalks along Six Shooter Canyon Road in Globe beginning at Remington and running North to Cherokee. Vice-Chairman Martin also noted for the record that this 5.7% match is due to the Board's hard won fight in the U.S. Senate a couple of years ago to get the match reduced from 20% down to 5.7%, so the County is enjoying the fruits of that labor. Mr. Stratton also noted that part of the reason for the sidewalk in this particular area is the connectivity between the College and the Globe Community Center and the large amount of residential neighborhoods in that area and the canyon area. **(A copy of the Resolution is permanently on file in the Board of Supervisors' Office.)**

**3C. Information/Discussion/Action to adopt Resolution No. 11-04-04, which authorizes the execution of an Intergovernmental Agreement (AG Contract No. P0012011 000392) between Gila County and the State of Arizona, Department of Transportation, at an estimated total project cost of $521,166 for pedestrian sidewalks along Main Street in Globe from U.S. Highway 60 to the intersection of Golden Hill Road.**

Mr. Stratton stated that this is a joint venture between the City of Globe and Gila County. It was identified as an area with a lot of residential traffic and shopping areas. It is the first phase of what is hoped to be a 2 or 3 phase project, which will connect Highway 60 at Main Street going through to Golden Hill and coming back up to Russell Road creating connectivity from the residential areas to the shopping areas in that vicinity. The Arizona Department of Transportation has a new staff member working on these now and it was completed about a year quicker than the project previously presented (in the agenda item 3B above), so that's the reason both projects are occurring at the same time. Vice-Chairman Martin again pointed out that this project also has a $30,000 match versus a $120,000 match because of the reduction in the rate from 20% to 5.7%, so basically for $60,000 the County is able to commit to completing these projects and $200,000 will be saved in the process. Vice-Chairman Martin stated, "When anybody wants to know what we do in Washington, D.C., this is part of what we are doing is seeing to it that we

can in fact make these dollars go as far as possible in this County." Mr. Stratton stated that he neglected to note that the 5.7% match for this project is $29,706, of which the County's commitment will be $14,853 and the City of Globe's match would be the same. The County's portion will be paid from the half cent sales tax dedicated to transportation and not the General Fund. Upon motion by Supervisor Dawson, seconded by Vice-Chairman Martin, the Board unanimously adopted Resolution No. 11-04-04, which authorizes the execution of an Intergovernmental Agreement (AG Contract No. P0012011 000392) between Gila County and the State of Arizona, Department of Transportation, at an estimated total project cost of $521,166 for pedestrian sidewalks along Main Street in Globe from U.S. Highway 60 to the intersection of Golden Hill Road. **(A copy of the Resolution is permanently on file in the Board of Supervisors' Office.)**

**3D. Information/Discussion/Action to adopt Proclamation No. 11-03 to proclaim April 2011 as National County Government Month in Gila County and to encourage all Gila County officials, employees, schools and residents to participate in related activities throughout the month.**

Supervisor Dawson stated that each year the National Association of Counties encourages counties to proclaim a specific week, which beginning last year was changed to a month, as National County Government Month to raise public awareness and understanding about the roles and responsibilities of county government. The 2011 theme is "Serving Our Veterans, Armed Forces and Their Families." A table has been set up in the Globe Courthouse foyer where families of service people are encouraged to bring in pictures and articles about our service men and women, and they will be honored. She stated that also later in the month an employee appreciation luncheon will be held along with an open house inviting the public to come and visit the County offices. She also ordered buttons for all employees to wear that state "County Government Works." She concluded by stating, "County government does work and it's the most efficient way of delivering services to our citizens and so I encourage us to adopt this resolution." Upon motion by Supervisor Dawson, seconded by Vice-Chairman Martin, the Board unanimously adopted Proclamation No. 11-03 to proclaim April 2011 as National County Government Month in Gila County and to encourage all Gila County officials, employees, schools and residents to participate in related activities throughout the month. **(A copy of the Proclamation is permanently on file in the Board of Supervisors' Office.)**

**3E. Information/Discussion/Action to approve Professional Consulting Services Contract No. 1005.103/1-2011 between Gila County and Elections Operations Services in an amount not to exceed $225,000 for the two-year election cycle beginning January 2011 and ending December 2012, with one additional two-year renewal.**

Linda Eastlick, Elections Director, advised that the County has used Elections Operations Services for many years to provide technical assistance for Gila

County elections. The company's work includes ballot layout, translation of ballots and pamphlets, database programming, printing of sample ballots, printing of ballots and mailing of sample ballots. This contract would provide election services for all of 2011-2012 taking the County through 3 major elections next year. Upon motion by Vice-Chairman Martin, seconded by Supervisor Dawson, the Board unanimously approved Professional Consulting Services Contract No. 1005.103/1-2011 between Gila County and Elections Operations Services in an amount not to exceed $225,000 for the two-year election cycle beginning January 2011 and ending December 2012, with one additional two-year renewal.

**3F. Information/Discussion/Action to approve Professional Services Contract No. 1005.120/2-2011 between Gila County and US Imaging, Inc. whereby microfilm storage services will be provided in the amount of $5,000 from April 5, 2011, through April 4, 2014.**

Sadie Tomerlin-Dalton, Recorder, stated that the Recorder's Office is currently utilizing U.S. Imaging, Inc. to do all of its microfilming of recorded documents, election books, rosters and registers. Approximately 2-3 years ago, U.S. Imaging, Inc. started offering a service of storing the microfilm of all documents offsite. The Recorder's Office has been using Iron Mountain for this storage in Phoenix at an approximate annual cost of $1,200. U.S. Imaging, Inc. can offer the same service for approximately $960 annually and the items will not have to be transported back and forth to Phoenix because the company is already handling the Recorder's microfilming and can keep the microfilm of the recorded documents at their site. U.S. Imaging, Inc. is also open 24 hours/day if there was an emergency need for records in Gila County and Iron Mountain was not available 24 hours/day. Upon motion by Supervisor Dawson, seconded by Vice-Chairman Martin, the Board unanimously approved Professional Services Contract No. 1005.120/2-2011 between Gila County and U.S. Imaging, Inc. whereby microfilm storage services will be provided in the amount of $5,000 from April 5, 2011, through April 4, 2014.

**3G. Information/Discussion/Action to adopt Resolution No. 11-04-02 authorizing renewal of Gila County's membership in the Arizona Local Government Employee Benefit Trust for the period commencing July 1, 2011, and terminating on June 30, 2014; and appointing Don E. McDaniel, Jr., Trustee, and John F. Nelson, Alternate Trustee, to serve on the Board of Directors of the Arizona Local Government Employee Benefit Trust (AZLGEBT) from July 01, 2011, until the appointment of a duly-qualified successor.**

Erin Collins, President of Erin Collins & Associates, stated that his company serves as Executive Director of the AZLGEBT. He provided a background of the manner in which the Trust was formed by several small counties and was later joined by Gila County. Legally AZLGEBT is a public entity pool formed under ARS §11-952.01 and is owned by the 6 counties that comprise its membership

to provide medical, dental, vision, disability and life insurance to its employees. Gila County, as an entity, is a shareholder. Membership in AZLGEBT is for 3-year terms and Gila County will complete a total of 12 years of membership on June 30, 2011. He noted that recently AZLGEBT requested that this Board pass a resolution changing its trustees due to the death of its former County Manager and the appointment of a new one. Mr. Collins stated that the Trust is regulated by the Department of Insurance as an insurance company and therefore requires a lot of documentation that must be done for periodic examinations, which are in addition to all of the financial audits, etc. What is being requested today is adoption of a resolution for Gila County to join the Trust for 3 additional years and to appoint the County's trustees as required by the membership documents. Mr. Collins then provided a brief summary of the financials of the Trust operations noting that after a few money-losing years, the Trust now has an approximate $200,000 positive cash flow so there will be a zero increase for the current year and minor tweaks to the schedule. There were no substantial changes made to the benefit plan other than those required by federal law. He also noted that the trustees will be voting on adding a dental network to get an in- and out-of-network benefit and the rationale used was to reduce the operating costs by about 30% in the area of dental without changing benefits. Basically AZLGEBT has contracted with the Ameritas Group to negotiate discounts for dental, similar to the contract with Blue Cross/Blue Shield on the medical side. AZLGEBT will also be doing something similar with prescription drugs to drive those costs down. Mr. Collins stated that the single biggest challenge this year was the first year of implementing the new federal health care reform known as the Patient Protection and Affordable Care Act (PPACA), which added about 3-3.5% onto AZLGEBT's rates. PPACA is one of these federal packaging gimmicks that largely shifts costs primarily from the Medicare/Medicaid structures onto employers and is done in ways that are politically popular, but very expensive. The biggest challenge AZLGEBT will probably face this year is the unlimited lifetime benefit. In the past, AZLGEBT had a $2 million lifetime benefit. Another PPACA change is a requirement by law to include children up to the age of 26 in the plan including if they are married. The plan is not allowed to charge anything even if they are not sick at any level. So AZLGEBT will have to absorb those costs. He stated, "It's going to create a kind of nightmare because it puts plans in a very precarious position." Mr. Collins concluded by stating that the good news is that the Trust is sitting in an extremely good financial position with approximately $7 million in the bank beyond statutory requirements. He reminded the Board that approximately 5 years ago there was a serious debate about not allowing Gila County to rejoin the Trust because it was a consistent money loser. However, Gila County has actually reversed its claims experience, which Mr. Collins believes was done through the efforts of its management and employees, who have constantly emphasized participation in the Wellness Programs and as well as programs initiated by AZLGEBT such as the mobile on-site mammography units. The Wellness Program actually provides a chance to not only improve the quality of life, but literally save lives and Gila County has become a leader in that and he

extended the thanks of the trustees for Gila County's leadership in that role. Chairman Pastor expressed his appreciation for the Wellness Program provided and encouraged all employees to participate. Each Board member thanked Mr. Collins for his leadership in this program as well as management and the Wellness Ambassadors. Upon motion by Supervisor Dawson, seconded by Vice-Chairman Martin, the Board unanimously adopted Resolution No. 11-04-02 authorizing renewal of Gila County's membership in the Arizona Local Government Employee Benefit Trust for the period commencing July 1, 2011, and terminating on June 30, 2014; and appointing Don E. McDaniel, Jr., Trustee, and John F. Nelson, Alternate Trustee, to serve on the Board of Directors of the Arizona Local Government Employee Benefit Trust from July 01, 2011, until the appointment of a duly-qualified successor. **(A copy of the Resolution is permanently on file in the Board of Supervisors' Office.)**

**3H. Information/Discussion/Action to approve Professional Agreement No. 6557.102/12-2010 between Gila County and Arizona Public Service Energy Services Company, Inc. (APSES), whereby APSES will perform a technical energy audit for Gila County from April 5, 2011, to April 4, 2012.**

Mr. Stratton explained that approval of this Agreement will allow Arizona Public Service (APS) to conduct an energy efficiency audit. He stated that in remodeling the new buildings, the County has tried to be as energy efficient as possible. This audit will help identify deficiencies in the County's energy programs countywide and as long as the County implements the recommendations made, this audit will be at no cost to the County. If the County does not implement recommended changes then it could cost approximately $17,000. He noted that an APS representative was present to answer any questions. Chairman Pastor inquired if this was part of the energy efficiency grant application from last year. Mr. Stratton replied that it was not the same. The one last year was done through the Arizona Department of Commerce and the County is still going through that process and changing some air conditioning units and dual pane windows and items of that nature. That process included the window replacement project on the back of the courthouse whereby the County used a product that provided some refunds for the cost. Chairman Pastor then inquired if this was a new grant funded program. Mr. Stratton deferred to Leonard Byrd from APS Energy Services. Mr. Byrd stated that the program that is being contemplated is for APS to look at how every County facility uses energy and come up with a list of recommended measures that will fund themselves from the savings that are generated. APS is also in the midst of similar programs for both Maricopa and Pinal counties. He stated that the Public Works Division has been doing a number of things especially with the American Recovery and Reinvestment Act grant funds that became available and APS is actually seeking to extend that because there are other source grants out there that are also pursued. So what is being proposed for approval is an all-encompassing energy profile of all the facilities and substantially anything that will fund itself and provide a long-

term infrastructure improvement to the County. Chairman Pastor inquired if APS would come in and set up some monitoring systems to gather data. Mr. Byrd explained that part of the audit would be data monitoring of all the facilities and how they operate and another part of it is computer modeling of the facilities. APS will actually build a computer model and calibrate it to the last 12 months of utility bills so that it can confirm that the computer model matches up with how the building actually operated. Then APS can apply different improvements to actually see and predict how those measures are going to be impacting the future energy costs and operational costs. Upon inquiry by Chairman Pastor if this would include the Payson facilities, Mr. Byrd replied that it would include all County facilities. Mr. Stratton stated that the Facilities Department will be involved with APS continually throughout the audit and will be working with them and will point out areas that are felt to be problem areas. Upon motion by Vice-Chairman Martin, seconded by Supervisor Dawson, the Board unanimously approved Professional Agreement No. 6557.102/12-2010 between Gila County and Arizona Public Service Energy Services Company, Inc. (APSES), whereby APSES will perform a technical energy audit for Gila County from April 5, 2011, to April 4, 2012.

**3I. Information/Discussion/Action to approve a Road Project Agreement (FS Agreement No. 11-RO-11031200-014) between the United States Department of Agriculture, Forest Service, Tonto National Forest and Gila County to begin a Roads Improvement Supplemental Project for the chip sealing of FR 661, culvert installation on FR 423, and erosion repair on FR 71 at a total project cost of $91,786.81.**

Mr. Stratton stated that this Road Project Agreement is an addition to the County's regular Maintenance Agreement with the U.S. Forest Service. These roads are on the Maintenance Agreement, but are above and beyond normal maintenance; therefore, the U.S. Forest Service will be supplying the County with the product as well as paying for some of the labor. The project will include culvert installation on Forest Road 423, which is Cline Boulevard, in preparation for a grant fund the County is hoping to receive to double chip seal that road later this year; for chip sealing of FR 661 to Indian Point, the boat ramp, however, the County will not go into the boat ramp area, but will stop right at the stop sign; and the placement of some large boulders for erosion repair on FR 71. Upon motion by Supervisor Dawson, seconded by Vice-Chairman Martin, the Board unanimously approved a Road Project Agreement (FS Agreement No. 11-RO-11031200-014) between the United States Department of Agriculture, Forest Service, Tonto National Forest and Gila County to begin a Roads Improvement Supplemental Project for the chip sealing of FR 661, culvert installation on FR 423, and erosion repair on FR 71 at a total project cost of $91,786.81.

**3J. Information/Discussion/Action to adopt Resolution No. 11-04-05 which calls upon the Arizona Department of Transportation to install signalized pedestrian crossings, or, at a minimum, install the "HAWK**

**System" of flashing red lights operable by pedestrians, in order to create adequate gaps in traffic for safe crossing in order to avoid death or serious physical injury to Globe students or citizens at this known dangerous location.**

Mr. Stratton provided an aerial photo for the Board to review this item. He stated that in conversations with the City of Globe and the Arizona Department of Transportation (ADOT), the crosswalk at the intersection of Ash and High Streets is one of the most dangerous intersections in Globe for the high school students. ADOT is continuing to do some enhanced pavement markings and signage; however, Mr. Stratton stated that he is not convinced that this is the best and final solution to the problem. Mr. Stratton has suggested that ADOT look at a potential relocation of the East Globe overpass, which is located by the old Toastmaster Café. In speaking with ADOT, the problem is that it will impact private property. Mr. Stratton stated that his suggestion to ADOT is that the City of Globe could make High Street a one-way street and it would allow for the overpass to be put in the right-of-way and not impact any private property. ADOT has assured him that they will at least review it and it may require some participation from the County in half cent sales tax, which Mr. Stratton has discussed with the County Manager. He stated that the Hawk System as presented to the Board will not require any participation monetarily from the County. Chairman Pastor inquired if the Hawk System is one of the options available. Mr. Stratton replied that the Hawk System is the minimum that he is requesting to be done; however, if there is a better option such as the overpass or something else that can be identified, then the County's request would be to implement the best option. Supervisor Dawson stated that this has been an ongoing problem for many years and she's glad that at least this is one step of improvement. Mr. Stratton pointed out that he did have a discussion with the ADOT board and mentioned the possible relocation of the overpass; however, ADOT's first answer to that was there's still a school there. Then in speaking with Ms. O'Dell, Mr. Stratton stated she is in total support of relocating that overpass to where it could be utilized because the alternative school transports 100% of the children that attend so they do not utilize the overpass. Chairman Pastor called on Linda Pearce, a resident of Midland City. Ms. Pearce commented that she didn't understand the reason the high school students didn't walk another 30 yards and cross at the light onto the school property at the school's parking lot. Vice-Chairman Martin stated, "I could tell her it's because they are teenagers and feel invincible. It doesn't make sense, but it is what it is." Upon motion by Supervisor Dawson, seconded by Vice-Chairman Martin, the Board unanimously adopted Resolution No. 11-04-05 which calls upon the Arizona Department of Transportation to install signalized pedestrian crossings, or, at a minimum, install the "HAWK System" of flashing red lights operable by pedestrians, in order to create adequate gaps in traffic for safe crossing in order to avoid death or serious physical injury to Globe students or citizens at this known dangerous location. **(A copy of the Resolution is permanently on file in the Board of Supervisors' Office.)**

**3K. Information/Discussion/Action to adopt Resolution No. 11-04-06 which declares support to maintain the projects described in the Arizona Department of Transportation's Five-Year Transportation Facilities Construction Program as reconstruction and lane additions to U.S. 60, the Silver King and Superior Streets sections, to begin no later than FY 2013 as originally programmed.**

Mr. Stratton stated that he was before the Board 5 years ago asking for support on the Gonzales Pass portion of this road. The data that the Sheriff collected for Mr. Stratton and data from the Department of Public Safety pertaining to the impact of the completed Gonzales Pass section shows that accidents in that area have now decreased since the improvements were done by the Arizona Department of Transportation (ADOT). However, in the past at least once a month that road was closed due to a fatal accident and at least once a week there was some kind of accident restricting traffic. He stated that ADOT did not want to do that project in that particular year, but through the County's efforts they were convinced to complete the project and it has had a positive impact on our citizens. Mr. Stratton stated that another portion of data has been collected from Freeport McMoran, which states that the company has 350 semi-trucks going over that road one way each day which converts to 700 trips by a semi and just from one mine. He stated that 50% of the workforce from the mines now commutes from the East Valley and a large portion of local residents drive to the East Valley for recreation and shopping. Mr. Stratton stated, "It's really in the best interest of our citizens, I believe, and their safety that this project be done and programmed as originally designed to do in 2013. The ADOT staff wants to move this project to 2016; however they've already said that there's not enough money to do any construction in 2016, so it's a shell game." Currently the projected cost is about $25 million for these 2 projects and they are currently being designed. He stated that if ADOT moves these projects to 2016, their projection for the cost then will be $60 million. Mr. Stratton requested that the Board support this resolution. He noted that Graham and Greenlee counties have already shown their support for these projects and they will be presented at public hearings. Another ADOT public hearing is scheduled for April 15th in Phoenix and May 20th in Flagstaff. Mr. Stratton stated that if this resolution is adopted, Chairman Pastor has agreed to present it to the ADOT board on April 15th. In a discussion, the Board agreed that these projects need to be completed. Upon motion by Vice-Chairman Martin, seconded by Supervisor Dawson, the Board unanimously adopted Resolution No. 11-04-06 which declares support to maintain the projects described in the Arizona Department of Transportation's Five-Year Transportation Facilities Construction Program as reconstruction and lane additions to U.S. 60, the Silver King and Superior Streets sections, to begin no later than FY 2013 as originally programmed. **(A copy of the Resolution is permanently on file in the Board of Supervisors' Office.)**

**3L. (Motion to adjourn as the Gila County Board of Supervisors and convene as the Gila County Library District Board of Directors)**

**Information/Discussion/Action to adopt Proclamation No. 11-04 to proclaim National Library Week, April 10-16, 2011, in Gila County.**

Upon motion by Supervisor Dawson, seconded by Vice-Chairman Martin, the Board adjourned as the Board of Supervisors and convened as the Gila County Library District Board of Directors.

Jacque Griffin, Assistant County Manager/Librarian, stated that National Library Week has been proclaimed since 1958 and this year all 8 public libraries in Gila County have agreed to have an advocacy and public information and awareness program called "Geek the Library," which came from a Bill and Linda Gates initiative from surveys on the biggest challenges facing libraries. She stated that in many cases, it is public perception of whether or not libraries are relevant. "Geek" is being used as a verb about what people are most passionate about or interested in. This will give the libraries the opportunity to help people learn more about their interests during this 6-month campaign. She then passed out samples of the information that will be used, which included bookmarks and stickers. Ms. Griffin requested that the Board adopt the Proclamation for National Library Week. Upon motion by Supervisor Dawson, seconded by Vice-Chairman Martin, the Board unanimously adopted Proclamation No. 11-04 to proclaim National Library Week, April 10-16, 2011, in Gila County. **(A copy of the Proclamation is permanently on file in the Board of Supervisors' Office.)**

**3M. Information/Discussion/Action to approve the renewal application on behalf of the Gila County Library District for the "First Things First Community-Based Literacy Grant" (FTF-RC004-11-0272-01) in the amount of $85,000 for fiscal year July 1, 2011, through June 30, 2012. (Motion to adjourn as the Gila County Library District Board of Directors and reconvene as the Gila County Board of Supervisors.)**

Ms. Griffin stated that last year the Library District received a First Things First (FTF) grant for community-based literacy efforts. She stated that the FTF organization has graciously allowed the Gila County Library District the opportunity to renew its grant and have doubled the funds from $45,000 to $85,000. Because of the increase, Ms. Griffin felt it was important to bring the application back to the Board for approval rather than it just being a continuation of a grant. The original deadline was back in March; however, the FTF organization has allowed the Library District to make the deadline of this meeting and they will then accept the paperwork tomorrow afternoon. Ms. Griffin provided some statistics on the program stating that currently 957 children have been added to the program with 361 of those being added since January 14, 2011. The goal for next year is 1,800 children. Upon motion by Vice-Chairman Martin, seconded by Supervisor Dawson, the Board unanimously approved the renewal application on behalf of the Gila County Library District for the "First Things First Community-Based Literacy Grant"

(FTF-RC004-11-0272-01) in the amount of $85,000 for fiscal year July 1, 2011, through June 30, 2012.

Upon motion by Supervisor Dawson, seconded by Vice-Chairman Martin, the Board adjourned as the Gila County Library District Board of Directors and reconvened as the Gila County Board of Supervisors.

**Item 4 - CONSENT AGENDA ACTION ITEMS:**
**4A. Authorization for the Gila County Attorney's Office to electronically submit a FY 2012 Grant Application to the Arizona Criminal Justice Commission Drug, Gang, and Violent Crime Control Program, to renew grant funding and approve any required match funding requirement.**

**4B. Approval of a Lease Agreement between the Gila County Attorney's Office and Alhambra Mini Storage in Globe for the rental of one storage unit for storage of files at a cost of $119 per month beginning February 25, 2011, and ongoing on a month-to-month basis.**

**4C. Approval of Amendment No. 1 to the 2010-2011 Weatherization Low-Income Assistance Contractual Agreement, Commerce G044-10-02, between the State of Arizona, Department of Commerce Energy Office and Gila County (Office of Community Services) to allocate an additional $5,040 for a total not to exceed amount of $33,474, which will be used to help residents who meet program qualifications for the period July 9, 2010, through June 30, 2011.**

**4D. Approval of Amendment No. 3 to the Memorandum of Understanding (MOU)/Contract for Help America Vote Act (HAVA) between Gila County and the Arizona Secretary of State.**

**4E. Approval of Amendment No. 1 to a Lease Agreement between Arizona Public Service Company and Gila County to extend the term of the lease for an additional three years; from April 27, 2011, to April 26, 2014, in the amount of one dollar ($1.00) per month.**

**4F. Acknowledge the appointment of Quentin Johnson as the new governing board member to the Canyon Fire District Governing Board, with term expiring November 30, 2012.**

**4G. Approval of two Intergovernmental Agreements for Election Services, one between the Gila County Department of Elections and the Cobre Valley Sanitary District and the other one between the Gila County Department of Elections and the Pinal Sanitary District for the May 17, 2011, election to merge the two Sanitary Districts.**

**4H. Approval of Professional Services Contract No. 1005.274/2-2011- Medical Director Services whereby McLaren Ruesch, M.D. will provide**

**medical director services for the Gila County Sheriff's Office Adult and Juvenile Detention Centers in Globe and the Adult Detention Center in Payson in the not to exceed amount of $48,000 for the period April 5, 2011, through April 4, 2012.**

**4I. Approval of Amendment No. 8 to Contract No. CMK0L090002 between Gila County, on behalf of Gila County Juvenile Detention Center, and the Bureau of Indian Affairs to extend the period of performance from December 31, 2010, to March 31, 2011.**

**4J. Approval of reappointment of Judge Gary V. Scales, and Judge Peter J. DeNinno, as Judges Pro Tempore for the Superior Court in Gila County for the period of July 1, 2011, through June 30, 2012.**

**4K. Approval of First Things First Notice of Renewal Consideration No. FTF-RC0004-10-0129-01-Y2 between Gila County and First Things First in the amount of $56,650 to extend the Gila County Early Childhood Screening Program for the period of July 1, 2011, through June 30, 2012.**

**4L. Approval of First Things First Notice of Renewal Consideration No. GRA-STATE-10-0070-01-Y2 between Gila County and First Things First in the amount of $25,101 to extend the Childhood Health Consultation Program for the period of July 1, 2011, through June 30, 2012.**

**4M. Approval of an Intergovernmental Agreement-Economic Development Grant between Gila County and the City of Globe whereby the County will disburse up to $65,000 to the City of Globe for use in construction of the the Old Dominion Historic Mine Park.**

**4N. Approval to adopt Proclamation No. 11-05 proclaiming April as Fair Housing Month in Gila County.** (A copy of the Proclamation is permanently on file in the Board of Supervisors' Office.)

**4O. Approval of the February 2011 monthly departmental activity report submitted by the Globe Regional Justice of the Peace.**

**4P. Approval of the February 2011 monthly departmental activity report submitted by the Payson Regional Constable.**

**4Q. Approval of the August 10, 2010, August 16, 2010, August 31, 2010, and September 7, 2010, BOS meeting minutes.**

**4R. Approval of Human Resources reports for the weeks of March 22, 2011, March 29, 2011, and April 5, 2011.**

**<u>March 22, 2011</u>**

Hires to County Service:

1. Joseph G. Williams – Assessor – Property Appraiser – 04/11/11 – General Fund – Replaces Annamaria Schutter

End of Probationary Period:

2. Bryan Kinder – Probation – Probation Officer Supervisor – 04/04/11 – State Aid Enhancement and Adult Intensive Probation Supervision Funds
3. Charlotte Williams – Recorder – Recorder's Clerk – 03/14/11 – General Fund
4. Cate DeLaTorre – Recorder – Recorder's Clerk – 03/14/11 – General Fund

Position Review:

5. Pete Ortega – Public Works – Solid Waste Operations Supervisor – 03/14/11 – Change to non-exempt status
6. Shannon Boyer – Public Works – Executive Administrative Assistant – 03/14/11 – Change to non-exempt status

Request Permission to Post:

7. Human Resources/Library Services – Human Resources and Library Services Assistant – vacated by Erica Raymond
8. Public Works – Building Maintenance Technician – vacated by Mark Warden

**SHERIFF'S PERSONNEL ACTION ITEMS**

Departures from County Service:

9. Earlene Ingram – Sheriff's Office – 911 Dispatcher – 03/03/11 – General Fund – DOH 11/08/10 – unsuccessful completion of probationary period
10. George Fishel – Sheriff's Office – Detention Officer – 04/30/11 – General Fund – DOH 05/09/94 – Retirement

Hires to County Service:

11. David Berry – Sheriff's Office – 911 Dispatcher – 04/11/11 – General Fund – Replacing Linda Kruse
12. Prestina Preston-Lynch – Sheriff's Office – 911 Dispatcher – 04/11/11 – General Fund – Replacing Charlene Gable

**March 29, 2011**

Departures from County Service:

1. Manuel C. Medrano – Board of Supervisors – Temporary Laborer – 02/25/11 – Constituent Services II Fund – DOH 11/22/10 – Temporary employment
2. Manuel V. Rocha – Board of Supervisors – Temporary Laborer – 02/25/11 – Constituent Services II Fund – DOH 11/22/10 – Temporary employment
3. Darryl D. McDaniel – Board of Supervisors – Temporary Laborer – 11/22/10 – Constituent Services II Fund – DOH 11/22/10 – Temporary employment
4. Zachary Salcido – Board of Supervisors – Temporary Laborer – 08/01/10 – Constituent Services II Fund – DOH 06/28/10 – Temporary employment
5. Jacob Reynoso – Board of Supervisors – Temporary Laborer – 08/01/10 – Constituent Services II Fund – DOH 06/21/10 – Temporary employment
6. Courtney Canez – Board of Supervisors – Temporary Laborer – 01/14/11 – Constituent Services II Fund – DOH 12/27/10 – Temporary employment
7. Denise Barajas – Board of Supervisors – Temporary Laborer – 01/14/11 – Constituent Services II Fund – DOH 06/07/10 – Temporary employment

8. Lois Jacott – County Attorney – Temporary Transcriptionist – 03/28/11 – County Attorney Cost of Prosecution Fund – DOH 02/20/06 – Temporary employment

Departmental Transfers:

9. Mark Gann – Public Works – From Solid Waste Operations Worker – To Solid Waste Operations Worker Sr. – 03/14/11 - Solid Waste Fund

Position Review:

10. Jolene Myers – Clerk of the Superior Court – Court Clerk – 03/28/11 – Change in fund code
11. Carolyn Borcherding – County Attorney – Deputy County Attorney Sr. – 03/28/11 – Change in number of hours worked
12. Karen Wartick – School Superintendent – Administrative Assistant – 02/01/11 – Change in number of hours worked

Request Permission to Post:

13. Emergency Services – Administrative Clerk Sr. – vacated by Vicki DeAnda

**SHERIFF'S PERSONNEL ACTION ITEMS**

Hires to County Service:

14. Gabriel Lagunas – Sheriff's Office – Detention Officer – 04/11/11 – General Fund – Replacing Monique Perez

End of Probationary Period:

15. Christopher Lisenbee – Sheriff's Office – Detention Officer – 03/14/11 – General Fund

**April 5, 2011**

Departures from County Service:

1. Sharon Heller – Health and Emergency Services – Administrative Clerk Sr. – 04/04/11 – Immunization Fund – DOH 09/25/06 – Resignation
2. Rebekah Perez – Treasurer – Treasurer Services Assistant – 03/30/11 – General Fund – DOH 07/30/07 – Resignation

Hires to County Service:

3. Doris Root – Community Services – Community Services Worker – 04/11/11 – GEST Fund – Replacing Patricia Rocha
4. Charles Turney – Health and Emergency Services – Community Health Assistant Sr. – 04/11/11 – Community Health Grants Fund – New position
5. Kevin Kenney – Health and Emergency Services – Rural Addressing Analyst – 04/11/11 – General Fund – Replacing Jeremiah Johnson

Temporary Hires to County Service:

6. Carol Tanner – Community Services – Community Services Worker – 04/11/11 – GEST Fund
7. Helene Lopez – Community Services – Community Services Worker – 04/11/11 – GEST Fund
8. Michelle Duarte – Payson Justice Court – Temporary Clerk – 03/28/11 – General Fund

Departmental Transfers:

9. Robert Whittle – Public Works – From Road Maintenance/Equipment Operator – To Solid Waste Operations Worker – 03/28/11 – From Public Works Fund – To Solid Waste Fund

**SHERIFF'S PERSONNEL ACTION ITEMS**

Hires to County Service

10. Sarah Bread – Sheriff's Office – 911 Dispatcher – 04/11/11 – General Fund – Replacing Earlene Ingram

**4S. Approval of finance reports/demands/transfers for the weeks of March 22, 2011, March 29, 2011, and April 5, 2011.**

**March 22, 2011**

$2,232,872.03 was disbursed for County expenses by check numbers 235305 through 235478.

**March 29, 2011**

$984,672.30 was disbursed for County expenses by check numbers 235479 through 235682.

**April 5, 2011**

$2,251,342.09 was disbursed for County expenses by check numbers 235683 through 236028. **(An itemized list of disbursements is permanently on file in the Board of Supervisors' Office.)**

Supervisor Dawson stated that she wanted to comment on Consent Agenda Action Item number 4B to Mr. Stratton. She recommended that as the budget is reviewed, perhaps the County should look at building its own storage units on its own land that are secure and safe instead of continuing to enter into these rental agreements. Chairman Pastor mentioned that the County also uses Conex boxes and agreed it would be something worth reviewing. Vice-Chairman Martin stated that she would like to see some metal structures built with whirlybirds on top to keep the contents cool. Supervisor Dawson stated that any archivist would advise that the high temperatures in those storage units lead to the deterioration of whatever is being stored. Chairman Pastor stated that he was sure Don McDaniel, County Manager, had made a note for further discussion. Upon motion by Supervisor Dawson, seconded by Vice-Chairman Martin, the Board unanimously approved Consent Agenda action items 4A-4S.

**Item 5 - CALL TO THE PUBLIC: Call to the Public is held for public benefit to allow individuals to address issue(s) within the Board's jurisdiction. Board members may not discuss items that are not specifically identified on the agenda. Therefore, pursuant to Arizona Revised Statute §38-431.01(G), action taken as a result of public comment will be limited to directing staff to study the matter, responding to criticism, or scheduling the matter for further discussion and decision at a future date.**

Chairman Pastor read aloud a letter from Pamela Mason, a resident of Pine, about the possibility of the Board raising the cost of public records to $1.00 per page, to which she was opposed stating it would create a hardship for those needing public records.

**Item 6 - At any time during this meeting pursuant to A.R.S. §38-431.02(K), members of the Board of Supervisors and the Chief Administrator may present a brief summary of current events. No action may be taken on issues presented.**

Each Board member and Mr. McDaniel presented information on current events.

There being no further business to come before the Board of Supervisors, Chairman Pastor adjourned the meeting at 11:29 a.m.

**APPROVED**:

_____

Michael A. Pastor, Chairman

**ATTEST**:

_____

Marian Sheppard, Chief Deputy Clerk

**BOARD OF SUPERVISORS MINUTES**
**GILA COUNTY, ARIZONA**

Date: May 17, 2011

| | |
|---|---|
| **MICHAEL A. PASTOR**<br>Chairman | **JOHN F. NELSON**<br>Clerk of the Board |
| **TOMMIE C. MARTIN**<br>Vice-Chairman | By: Marilyn Brewer<br>Deputy Clerk |
| **SHIRLEY L. DAWSON**<br>Member | Gila County Courthouse<br>Globe, Arizona |

---

PRESENT: Michael A. Pastor, Chairman; Tommie C. Martin, Vice-Chairman (via ITV conferencing); Shirley L. Dawson, Supervisor; Don McDaniel, Jr., County Manager; John Nelson, Deputy County Manager; Marilyn Brewer, Deputy Clerk; and Bryan Chambers, Chief Deputy County Attorney.

**Item 1 – Call to Order – Pledge of Allegiance – Invocation**

The Gila County Board of Supervisors met in a regular session at 10:00 a.m. this date in the Board of Supervisors hearing room. Malissa Buzan led the Pledge of Allegiance and Reverend Rich Richie of the First Church of the Nazarene in Payson delivered the invocation.

**Item 2 – PRESENTATIONS:**

**2A. Recognition of the following 8 employees for April's "Spotlight on Employees" Program: Delia Benavidez, Stephanie Mata, Mary Mendez, Judith Moss, Jacquelyn Serrano, Mary Allen, Rebecca Baeza and Jonathan Bearup.**

Erica Raymond, Human Resources Assistant, presented gift cards as recognition awards to 8 employees for April's "Spotlight on Employees" Program as follows: Delia Benavidez, Stephanie Mata, Mary Mendez, Judith Moss, Jacquelyn Serrano, Mary Allen, Rebecca Baeza and Jonathan Bearup. Each Board member thanked the employees for their dedicated work.

**Item 3 – PUBLIC HEARINGS:**

**3A. Public Hearing - Information/Discussion/Action to adopt Resolution No. 11-05-01 authorizing the Gila County Housing Authority to submit its Annual Plan for Fiscal Year 2011 to the U.S. Department of Housing and Urban Development.**

Malissa Buzan, Community Action Plan/Housing Program Manager, requested approval of the Resolution for the County's Section 8 Housing Choice Voucher Program and the Annual Plan. Chairman Pastor opened the public hearing and called for public comment; none was received. He closed the public hearing and entertained a motion. Upon motion by Vice-Chairman Martin, seconded by Supervisor Dawson, the Board unanimously adopted Resolution No. 11-05-01 authorizing the Gila County Housing Authority to submit its Annual Plan for Fiscal Year 2011 to the U.S. Department of Housing and Urban Development. **(A copy of the Resolution is permanently on file in the Board of Supervisors' Office.)**

**Item 4 – REGULAR AGENDA ITEMS:**

**4A. Information/Discussion/Action to adopt Proclamation No. 11-06 proclaiming May 2011, as Building Safety Month in Gila County.**

Joe Mendoza, Community Development Division Deputy Director, requested that the Board declare May 2011 as the Building Safety Month in Gila County. He stated that Governor Brewer has declared Building Safety Month in Arizona and for the first time, President Obama has declared Building Safety Month in the United States. Mr. Mendoza advised that activities are being planned and called upon Debby Bradway, Environmental Planning Technician, to review those activities. Ms. Bradway stated that in honor of Gila County's Building Safety Month, educational materials are being provided at the Community Development Division in both the Globe and Payson offices. There will be a theme for each week—week 1 is energy and green building; week 2 is disaster, safety and mitigation; week 3 is fire safety and awareness; and week 4 is backyard safety. On May 26, 2010, refreshments will be served to the customers for customer appreciation day. Upon motion by Supervisor Dawson, seconded by Vice-Chairman Martin, the Board unanimously adopted Proclamation No. 11-06 proclaiming May 2011, as Building Safety Month in Gila County. Vice-Chairman Martin thanked the staff for their efforts on behalf of promoting the Building Safety Month in Gila County. **(A copy of the Proclamation is permanently on file in the Board of Supervisors' Office.)**

**4B. Information/Discussion/Action to authorize the Chairman's signature on two letters from the Board of Supervisors to the United States Department of Agriculture (USDA) in support of the Pinal Sanitary District's and the Cobre Valley Sanitary District's joint application for a direct loan/grant to the Rural Utilities Wastewater Program of the USDA Rural Development.**

Chairman Pastor stated that State legislation was passed this year allowing sanitary districts to merge and today an election is being held on the merger of the Pinal Sanitary District and the Cobre Valley Sanitary District. These Districts requested that the Board provide a letter of support for a loan

application being submitted by the Districts. It doesn't commit the County to any monies or in kind services; it's simply to help move the District's projects along. Upon motion by Vice-Chairman Martin, seconded by Supervisor Dawson, the Board unanimously authorized the Chairman's signature on two letters from the Board of Supervisors to the United States Department of Agriculture (USDA) in support of the Pinal Sanitary District's and the Cobre Valley Sanitary District's joint application for a direct loan/grant to the Rural Utilities Wastewater Program of the USDA Rural Development.

**Item 5 - CONSENT AGENDA ACTION ITEMS:**

**5A. Approval of the appointment of William Robert Flower as a Justice of the Peace Pro Tempore for the Globe and Payson Regional Justice Courts in Gila County, for the period of May 1, 2011, through December 31, 2011.**

**5B. Approval of an Application for Fireworks Display submitted by the Miami High School Class of 2011 requesting to conduct a fireworks display on May 20, 2011, for the Miami High School graduation ceremony.**

**5C. Approval of a Memorandum of Understanding to an Intergovernmental Agreement between the City of Globe and Gila County in which the City of Globe has applied for Community Development Block Grant funds to provide housing rehabilitation within the City of Globe and whereas Gila County Housing Services will provide rehabilitation services to the City of Globe to meet the requirements under this application. As compensation for services provided, the City of Globe will pay Gila County Housing Services $15,000 for administration of the grant and the sum of $23,095 for rehabilitation services for the period of March 23, 2011, through March, 23, 2013.**

**5D. Approval of Amendment No. 1 to Contract No. 10100 between Gila County and Central Arizona Association of Governments increasing the contract amount from $1,140,809 to $1,166,015 (an increase of $25,206) for the period July 1, 2010, through June 30, 2012.**

**5E. Approval of Amendment No. 1 to an Intergovernmental Agreement (Contract No. DE101056001) between Gila County and the Arizona Department of Economic Security to revised Section 31.0-Indirects.**

**5F. To authorize the Chairman's signature on Amendment No. 1 to the Sales Agreement between Gila County (Recorder's Office) and Tyler Technologies Inc., Eagle Division, for the purchase and maintenance of the Eagle Quickdocs software module in the amount of $12,200 plus an annual maintenance fee of $3,000 for a total cost of $15,200 and an**

**agreement between Gila County (Recorder's Office) and Simplifile for electronic recording in Gila County at no additional cost to the County.**

**5G. Authorization for the Chairman to sign a Standard Software Maintenance Agreement between Gila County and New World Systems Corporation in the amount of $271,704 for a three-year term, from July 1, 2011, to June 30, 2014, for modules contained in the County licensed New World application packages.**

**5H. To authorize the Chairman's signature on Amendment No. 2 to Contract 111008-1 between Gila County and MV Enterprises whereby MV Enterprises will provide bulk fuel and lubricants to Gila County for one year from June 3, 2011, to June 2, 2012.**

**5I. Authorization for the Chairman to sign two separate Transit Agreements for the distribution of LTAF II (Local Area Transportation Funds) funds to the following entities: Time Out, Inc. in the amount of $2,500, and the Boys and Girls Club of Globe in the amount of $5,000.**

**5J. Approval of reappointment of Mark Marcanti to the Industrial Development Authority of Gila County for an additional six-year term retroactive from January 20, 2010, to January 20, 2016, and reappointment of William Long to the Industrial Development Authority of Gila County for an additional six-year term retroactive from May 18, 2010, to May 18, 2016.** (This item was tabled to a future meeting.)

**5K. Approval of the September 21, 2010, and October 5, 2010, BOS meeting minutes.**

**5L. Approval of the March 2011 monthly departmental activity report submitted by the Clerk of Superior Court.**

**5M. Approval of the Human Resources reports for the weeks of May 10, 2011, and May 17, 2011.**

**May 10, 2011**

Departures from County Service:

1. Dorothy A. Koshinski – Clerk of the Superior Court – Courtroom Clerk – 05/06/11 – General Fund – DOH 01/23/06 – Retirement
2. Kimberley Gissendanner – Community Services – Career and Employment Specialist – 04/21/11 – Various Funds – DOH 04/20/09 – Resignation

End of Probationary Period:

3. Gaylynn Quintana – County Attorney's Office – Legal Secretary Sr. – 05/06/11 – Diversion Program Fund

Departmental Transfers:

4. Brenda Cova – Probation – From Administrative Clerk – To Administrative

Clerk Sr. – 05/09/11 – State Aid Enhancement Fund

Position Review:

5. Catherine Levario – Public Works – Solid Waste Services Worker – 04/08/11 – Correction to fund code

Request Permission to Post:

6. Public Works – Road Maintenance/Equipment Operator – Vacated by John Jackson

**May 17, 2011**

Departure from County Service:

1. Gary H. Lopez – Community Services – Community Services Worker – 05/03/11 – GEST Fund – DOH 08/16/10 – Resignation

Hire to County Service:

2. Jessica Johnson – Probation – Juvenile Detention Shift Supervisor – 05/23/11 – General Fund – Replacing Karen Eylicio

Temporary Hires to County Service:

3. Denise M. Barajas – Board of Supervisors – Temporary Laborer – 05/31/11 – Constituent Services II Fund
4. Randy Woodie – Board of Supervisors – Temporary Laborer – 05/03/11 – Constituent Services III Fund

End Probationary Period:

5. David Hom – Public Works – Building Maintenance Supervisor – 05/23/11 – Facilities Management Fund

Request Permission to Post:

6. Public Works – Road Maintenance/Equipment Operator – Vacated by Robert Whittle

**SHERIFF'S PERSONNEL ACTION ITEMS**

Hire to County Service:

7. Lynn Edward Durst – Sheriff's Office – Detention Officer – 05/23/11 – General Fund

**5L. Approval of finance reports/demands/transfers for the weeks of May 10, 2011, and May 17, 2011.**

**May 10, 2011**

$590,513.48 was disbursed for County expenses by check numbers 236816 through 236957.

**May 17, 2011**

$2,110,422.37 was disbursed for County expenses by check numbers 236958 through 237176. **(An itemized list of disbursements is permanently on file in the Board of Supervisors' Office.)**

In reference to the Consent Agenda Action items, Chairman Pastor requested that Consent Agenda item 5G be moved to the regular agenda for discussion and Supervisor Dawson requested that Consent Agenda item 5J also be moved to the regular agenda. Upon motion by Supervisor Dawson, seconded by Vice-Chairman Martin, the Board unanimously approved Consent Agenda items 5A through 5N with the exception of 5G and 5J, which were moved to the regular agenda for discussion with a separate Board action.

**5G. Authorization for the Chairman to sign a Standard Software Maintenance Agreement between Gila County and New World Systems Corporation in the amount of $271,704 for a three-year term, from July 1, 2011, to June 30, 2014, for modules contained in the County licensed New World application packages. (Pulled from the consent agenda to the regular agenda.)**

Chairman Pastor stated that in reviewing the agenda he noted that the amount for this agreement was for $271,704, which to him was quite large; however, there have been discussions held over the past 6-7 months about some of the improvements or additions to the software package that are needed in the Finance Department. He just wanted to ensure that the County is transparent to the public in what it is doing. He noted that the original agreement was for 18 modules and this agreement will be for 3 more and inquired of Mr. Heatherly whether he was comfortable with the agreement. Mr. Heatherly replied that he was in favor of going forward with the agreement. Supervisor Dawson inquired whether the County was current with its audits. Mr. Heatherly stated that the auditors have completed their review of the County's information and will be forwarding a draft of the FY 2010 audit next week. Each Board member commented on the improvements and accountability in the finance accounting and reporting and thanked Mr. Heatherly along with current and past Finance Department staffs. Upon motion by Vice-Chairman Martin, seconded by Supervisor Dawson, the Board unanimously approved Consent Agenda Action item 5G.

**5J. Approval of reappointment of Mark Marcanti to the Industrial Development Authority of Gila County for an additional six-year term retroactive from January 20, 2010, to January 20, 2016, and reappointment of William Long to the Industrial Development Authority of Gila County for an additional six-year term retroactive from May 18, 2010, to May 18, 2016. (Pulled from the consent agenda to the regular agenda.)**

Supervisor Dawson addressed this agenda item. She stated, "My concern with this item is we've gone through our boards and commissions review. Again, the IDA is the Industrial Development Authority of Gila County. Its goal is one; mainly to bond those industries that come to the County for bonding authorization. Unfortunately, in '98 there was a charge instituted for that and

that money has become an amount of funds that in some instances has been used in political activities. The purpose of the IDA and the IDA board is for industrial development. It is a corporation and I believe that we should deactivate it. We can reactivate it upon request for any industry that wants to be in the position of requesting Gila County bonding. But if we're talking about economic development, then I believe that the Economic Development board would be involved with that. I do not see this being an organization that needs to be functioning right now and I certainly don't see placing this…I have nothing against the board members, any of them, and I just feel that we are not using the Industrial Development Authority for bonding and therefore it can be an inactive committee until necessary." Chairman Pastor stated, "The item on the agenda is for the approval of the reappointment of 2 board directors' memberships and that's basically what we can address at this point in today's meeting. To request a deactivation of the board, I think we would have to make that as a separate agenda item." Supervisor Dawson replied, "I agree with that. That's why I'm not voting to approve a 6-year appointment of board members." Chairman Pastor inquired of Supervisor Dawson, "So you want to take action on the appointment and everything is secondary until another meeting is set?" Supervisor Dawson replied, "Until it's brought before the board. You know we put up this board's and commission's review. Well, are we just going to review them or are we going to take action on those boards or are we just spinning our wheels doing this little exercise of…?" Chairman Pastor replied, "Well, but you are talking about 2 different things right now." Supervisor Dawson stated, "No, I'm not." Chairman Pastor stated, "We met on the boards and commissions and correct me if I'm wrong Tommie (Vice-Chairman Martin) or Mr. McDaniel. The process is we were going to meet because we didn't know what was going on with our boards and commissions and we were going to review what needed to be done with them. This is first time I've heard anything about deactivating and whether it's right, wrong or indifferent, I think if we're going to do that, we need to sit in a session and discuss the processes that are involved because I believe the board of directors for the Industrial Development is a separate political entity according to statute and there's requirements there that they have to follow." Supervisor Dawson stated, "They are a separate board appointed by the Board of Supervisors. The Industrial Development Corporation was, until a few years ago, an integral part of Gila County. Their funds were at times under Gila County and certainly run by Gila County. Mr. Chairman, I do not want to extend the Industrial Development Authority or its board by voting to reappoint 2 members to that commission through 2016. I believe that as the Board of Supervisors reviews boards and commissions in work sessions that we should then bring an item to the board for action on any boards or commissions that we have questions about and I will do that in the future. For right now I'm saying I do not see reappointing people until 2016 when they themselves said they weren't real sure what the IDA was about. You said that about your own service on there, that you weren't real sure why you served on it—what it was about." Mr. Pastor replied, "That's true, but what I'm asking you is what is your motion? Is

your motion not to approve these 2 reappointments?" Supervisor Dawson replied, "Exactly. Yeah." Vice-Chairman Martin stated, "Well, that's a fine topic I think we need to discuss perhaps someday. That's not germane to this item and as a matter of fact, I have 2 names that I'm getting ready to submit to finish filling out the 2 folks from up here. That's the direction I am on this. I was trying to find folks here because it's always been a lag of people up here who are interested in serving on this group, although they've done quite a bit of work up here. They've done probably as much good in helping folks here as they have anywhere in this County. So I have 2 names that I'll be getting to Marian (Sheppard) to finish filling out my places on that board. I think that whether or not we do this, or not, it's beside the fact of whether or not we can decommission them or not and whatever their terms are or whoever's on there I don't think it matters if we take action on this. It will not presuppose any other decision, I don't believe." Supervisor Dawson inquired about northern Gila County and the exact industrial development action that has been taken by the IDA in that area. Vice-Chairman Martin stated, "The most recent was the seniors, I think they call it the Rim Country Senior's Baptist Foundation funded I believe. It's for senior housing. It's that upper scale senior housing. It's the Majestic Rim Housing. We've had some meetings over there and it's a really fine facility. I think that's the last one that I know about, but it's not the first one." Supervisor Dawson inquired if it was a bonding activity to which Vice-Chairman Martin replied that it was. Supervisor Dawson stated, "My motion is not to reappoint Mark Marcanti and Bill Long to the IDA board." Chairman Pastor stated, "Before I ask for a second, do we have some potential candidates to replace them at this time or do you have any or you're just going to go with the board of directors minus 2?" Supervisor Dawson replied, "We will not be appointing anyone to the IDA board." Chairman Pastor inquired, "That's your motion?" Supervisor Dawson replied, "Yes, based on the fact that I do not believe the IDA is functioning under what it was designed for." Chairman Pastor called for a second to Supervisor Dawson's motion. Vice-Chairman Martin stated, "Mr. Chairman, no. I was still thinking about Supervisor Dawson's question on IDA's activity up here. Can I go ahead and answer that before we go on? The most recent thing they've done is help fund a mountain bike activity going on in Pine this summer. I know we just got word of them (the IDA) funding them to the tune of $15,000-$16,000 to get the mountain bike world going on up here. I think what it's about is to keep their fuel break open. It's for money through a bike run to generate money to keep the fuel break maintained around Pine that we (Gila County) helped pay for. If Supervisor Dawson does not want to reappoint those 2 people I don't know that we have to take any action at all." Chairman Pastor deferred to the County Attorney. Mr. Chambers, Chief Deputy County Attorney, stated, "There's a motion on the table that hasn't been seconded. If it's seconded then there would be a vote one way or another. If it's not seconded, it will die for lack of a second at which point the Chairman could entertain another motion. Chairman Pastor inquired whether Vice-Chairman Martin heard Mr. Chamber's comment. Vice-Chairman Martin replied that she did hear Mr. Chamber's

comment. Chairman Pastor stated, "So, there's been a motion made to not approve the reappointment of Mr. Marcanti or Mr. Long." Vice-Chairman Martin inquired whether these were Supervisor Dawson's appointments or Chairman Pastor's appointments. Supervisor Dawson stated, "I don't even recall." Chairman Pastor stated, "I believe they are probably one mine and one Supervisor Dawson's." He continued, "I would like to ask a question as to whether we approve them or don't approve them today; what happens to those positions? Do they stay open? Do they continue serving in the interim?" Supervisor Dawson stated, "It's obvious by the term of the office that they have been serving since 2010, just not officially. Their terms expired in 2010--January and May." Vice-Chairman Martin stated, "My question: Would not appointing them that goes retroactive to January 2010 at least on the one and May 2010 on the other, does that nullify any actions the 2 of them took?" Mr. Chambers replied, "I'm not sure that I have enough information to answer that question. That certainly could pose some problems to them. I think we discussed before, they have independent legal counsel and so that would certainly be a legal issue for them to discuss. It's conceivable that if they had some close votes on actions that they took and that these individuals voted in favor of the actions that were only approved by slim majorities, they could have some legal issues that come up if the Board (of Supervisors) doesn't agree to reappoint these individuals." Vice-Chairman Martin inquired, "Does that give us some liability by not doing our work? That they are not on there legally to take a legal action?" Mr. Chambers replied, "I'm not sure that really creates any legal liability on the County for doing that. Certainly the IDA may have some legal concerns and again they have independent counsel who can advise them on what they need to do if that happens. There also may be, if these individuals aren't reappointed, then certainly they may have some issues regarding how many of their members it takes to create a quorum, but again, that would be their concern and the concern of their counsel. My understanding of the statute is that this Board (of Supervisors) has the authority to appoint their (the IDA) members. So that's totally up to the pleasure of this Board." Supervisor Dawson stated, "The comment was made at our boards and commissions review that when I asked the question about authorizing the chairman of the IDA to spend $15,000 without board authorization, they said they always had unanimous votes. I think there was something about a railroad involved, but the chairman allocated these funds without board vote and that they never had…they worked out their differences before so there's never been a vote that wasn't already approved and unanimous." Vice-Chairman Martin stated, "But Mr. Chairman, I don't know that. That's a hearsay thing. I haven't gone through their…" Supervisor Dawson interrupted and stated, "Tommie, you were on the phone when we had that hearing." Vice-Chairman Martin replied, "I know what they said, but I don't know that. I know that's what they said." Supervisor Pastor stated, "Well, one of my concerns is the fact that the IDA isn't here to respond or to be able to answer for themselves, so before we take any type of action I would like to continue this agenda item to the next board meeting and ask staff to research

the legalities of the fact that…I can understand that we don't have to approve the appointments of the 2 members. I don't know that we have a majority vote that would vote to not approve them." Supervisor Dawson stated, "I will withdraw my motion and make a motion that we table Item J." Chairman Pastor inquired, "Can we continue it to the next meeting or 2 meetings down the road?" Supervisor Dawson stated, "We are into the budget and I would suggest that we continue it until Mr. McDaniel is comfortable with placing it on the agenda." Chairman Pastor inquired of Don McDaniel, County Manager, "Any response to that, Mr. McDaniel? Did you have a problem with it? Can we do that? I think it would be better. I think I would like to have the Industrial Development Authority director or directors here to be aware of what's going on. This came up pretty quick. And so I would entertain a second to the motion to continue the item to a later agenda, Tommie? Vice-Chairman Martin replied, "I second (the motion) Mr. Chair(man)." Chairman Pastor stated, "A motion has been made and seconded to continue agenda item 5J." Mr. McDaniel stated, "For clarification, this item is very specific with regard to the reappointment of a couple of members to the board. We can continue this as long as you'd like. It will still be a discussion about the reappointment of those 2 members. It will not be a discussion about whether the board should continue or whether it should be put in idle or anything else. So if that is the intent is to have staff come back with some recommendations with regard to that part of the issue, we would be unable to do that unless you wanted to suggest that we put another item on the agenda that would address those issues." Supervisor Dawson stated, "I would be willing to. I don't know the date when we can do that because of the budget, but when possible to put an item on a work session to again discuss where IDA is and where it's headed. Chairman Pastor inquired, "Do you want to do that in a work session?" Supervisor Dawson replied, "Yes." Chairman Pastor inquired, "And the reappointment can be continued?" Supervisor Dawson replied, "Then after that." Chairman Pastor stated, "The motion has been made and seconded to continue agenda item 5J dependent on staff's determination." The motion had previously been seconded by Vice-Chairman Martin. Chairman Pastor called for a vote. The motion carried by a unanimous vote.

**Item 6 - CALL TO THE PUBLIC: Call to the Public is held for public benefit to allow individuals to address issue(s) within the Board's jurisdiction. Board members may not discuss items that are not specifically identified on the agenda. Therefore, pursuant to Arizona Revised Statute §38-431.01(G), action taken as a result of public comment will be limited to directing staff to study the matter, responding to criticism, or scheduling the matter for further discussion and decision at a future date.**

There were no requests to speak from the public.

**Item 7 - At any time during this meeting pursuant to A.R.S. §38-431.02(K), members of the Board of Supervisors and the Chief Administrator may present a brief summary of current events. No action may be taken on issues presented.**

Each Board member presented information on current events.

There being no further business to come before the Board of Supervisors, Chairman Pastor adjourned the meeting at 11:05 a.m.

**APPROVED**:

_____

Michael A. Pastor, Chairman

**ATTEST**:

_____

Marian Sheppard, Chief Deputy Clerk

**BOARD OF SUPERVISORS MINUTES**
**GILA COUNTY, ARIZONA**

Date: May 31, 2011

| | |
|---|---|
| **MICHAEL A. PASTOR**<br>Chairman | **JOHN F. NELSON**<br>Clerk of the Board |
| **TOMMIE C. MARTIN**<br>Vice-Chairman | By: Marian Sheppard<br>Chief Deputy Clerk |
| **SHIRLEY L. DAWSON**<br>Member | Gila County Courthouse<br>Globe, Arizona |

---

PRESENT: Michael A. Pastor, Chairman; Tommie C. Martin, Vice-Chairman (via ITV conferencing); Shirley L. Dawson, Supervisor; Don McDaniel, Jr., County Manager; and Marian Sheppard, Chief Deputy Clerk.

**Item 1 – Call to Order – Pledge of Allegiance**

The Gila County Board of Supervisors met in a work session at 10:00 a.m. this date in the Board of Supervisors hearing room. Chairman Pastor led the Pledge of Allegiance.

**Item 2 – Presentation/Discussion regarding the Gila County Board of Supervisors exploring the establishment of a Separate Legal Entity (SLE) with the Town of Payson and the Town of Star Valley.**

Town of Payson Mayor Kenny Evans addressed this agenda item by advising that for the past 4-5 years, he and others have been involved in an ongoing effort to create a 4-year university in Payson. Part of that initial process was to conduct an exploratory survey of Payson area residents and then try to resolve each of those concerns. Mayor Evans stated, "One (concern) was Town residents didn't feel they had the capacity or desire to create a university on the backs of the tax base, bonding authority. The reservoir project, based on its size, was all we could handle as one major project at a time…We wanted to create a stand-alone entity, financed without having to impact the bonding, but still be able to come to an agreement with an educational institution." He explained that passage of legislation over the past couple of years now allows cities, towns, counties and special taxing districts to form a separate legal entity (SLE), of which all of the specifics are outlined in A.R.S. §11-952.02 - Separate Legal Entities; Joint Exercise of Powers.

Supervisor Dawson compared an SLE to that of an Industrial Development Authority (IDA) and she was concerned that once an SLE was created, it could

never be dissolved. She also questioned the reason Gila County was being asked to participate in the SLE. Mayor Evans replied that an IDA has very specific authorities whereas an SLE is a much more powerful tool to enter into agreements with the state and federal government. All of the purposes for forming an SLE must be spelled out in an Intergovernmental Agreement (IGA) and there must also be a Governance Agreement. In answering Supervisor Dawson's question about the Towns' reasoning for inviting Gila County to participate in forming an SLE, Mayor Evans replied that the Towns don't need the County to participate, but rather it was an opportunity for all 3 entities to reap future benefits. He explained that an SLE has the ability to engage in electric generation and transmission, which could benefit the County.

Mayor Evans entered into a discussion with the Board regarding the purpose and content of both the IGA and Governance Agreement. The IGA, to be signed by all 3 entities, would initially be for a period of 50 years and it may be extended for additional 10-year periods upon approval of a resolution by each of the entities. He also mentioned that none of the entities would contribute funding to the SLE. He stated: "Theoretically each entity could appoint, say, 3 members (to a board of directors). They are offered, which is somewhat rare, where a member of the Board of Supervisors could sit on that board. It may be an evolving board. Its purpose is to acquire the land, amalgamate the land to a sufficient size for a college campus to make it energy neutral. It's a land acquisition and amalgamation function predominantly. Those contracts (the IGA and Governance Agreement) will govern the day-to-day operations."

Vice-Chairman Martin stated, "Today we are being asked to agree in concept, but allow staff and attorneys to come up with the next steps to take." Mayor Evans replied that this effort will require a commitment of staff time from all 3 entities, but before taking the next step, there needs to be an agreement in place, at least in concept. He also added that if the County chooses not to participate, the Towns may proceed in a different direction.

Mayor Evans provided specific details of the steps to be taken once the SLE is formed. He reiterated that the primary purpose is to acquire land for the college, which could include a land exchange with the Forest Service. A discussion ensued regarding the amount of land needed, and the involvement of Winters Energy Group in building, owning and operating a solar energy facility at the Payson Event Center. He stated, "The land is owned by Payson. The energy facility being built will be owned by Winters Group, so there would be a tax coming back to the County. The County gets the bulk of taxes on the property. This is a private corporation that anticipates making money, so it would be a taxable enterprise."

Chairman Pastor inquired about the funding and Mayor Evans replied that the funding would come from private investors. Chairman Pastor commented that he has supported the Gila County Community College (GCCC) for years and he

wanted some type of assurance that the proposed university would work in concert with GCCC. Mayor Evans stated that they would work with GCCC.

At the conclusion of the discussion, Vice-Chairman Martin stated that she did not see the downside of taking this issue to the next step, which would be to place an action item on a future Board of Supervisors' meeting agenda to direct staff to work with the Town of Payson and Town of Star Valley in drafting an IGA. Chairman Pastor felt that at this point he has a lot of questions that need to be answered by attorneys. He advised that the Board would meet with County Manager Don McDaniel to determine the need for placing this issue on a future Board of Supervisors' meeting agenda. The Board thanked Mayor Evans for his time.

Mr. McDaniel suggested that the Board address agenda items 4 and 5, and then return to item 3. At 11:50 a.m., Chairman Pastor recessed the meeting for approximately 5 minutes. He reconvened the meeting and then called on Matthew Bolinger, Health and Emergency Management Division Director, to address agenda items 4 and 5.

**Item 4 - Information/Discussion regarding Gila County's adoption of an ordinance relating to the use of permissible consumer fireworks.**

Mr. Bolinger advised that County Manager Don McDaniel requested that an ordinance be drafted to address the use of fireworks in Gila County, especially during the summer months when fire restrictions are typically imposed by the Board of Supervisors for the unincorporated areas of the County. He advised that newly enacted legislation does not allow cities or towns to ban the sale of fireworks; however, it does allow cities and towns to impose restrictions on the use of permissible consumer fireworks within its corporate limits and a county may regulate the use of permissible consumer fireworks within the unincorporated areas of the county during times when there is a reasonable risk of wildfires in the immediate county. Mr. Bolinger drafted an ordinance and he stated that another suggestion was that language regarding the use of fireworks be added to an existing County ordinance. He then called upon Marian Sheppard, Chief Deputy Clerk, to further expound on the purpose of this agenda item. Ms. Sheppard advised that the Board could review the draft ordinance Mr. Bolinger drafted, which is attached to this agenda item, or consider amending an existing County ordinance, which addresses open outdoor fires by adding language related to fireworks. Vice-Chairman Martin advised that Ordinance 98-01 – Open Outdoor Fire contains language that addresses the burning of existing combustibles, so she suggested that the Board could just add the word "fireworks" to it or adopt a separate ordinance which specifically addresses fireworks. She stated, "Fire chiefs have taken a look at this. The law continues to move around fireworks right now…If we add it (the word "fireworks"), it lets us ban the use of fireworks during fire season. It lets us match to their restrictions. They (fire chiefs) felt that was adequate at

this time until Arizona finally decides how it will handle fireworks in general." Mr. McDaniel briefly reviewed the revisions that would be made to Ordinance No. 98-01 and he added that the amended language would not prohibit a public fireworks display that has been previously approved by the Board of Supervisors. Chairman Pastor stated that A.R.S. §36-1601 defines "fireworks" and also "permissible consumer fireworks", and he inquired if the proposed amendments to the existing ordinance would address both. Mr. McDaniel replied that the added language would be broad enough to cover fireworks. Supervisor Dawson expressed a concern that the risk of wildfires is right now so she would like the amended ordinance to be adopted at the next regular Board meeting, which would be June 7th. Mr. McDaniel advised that in order to change an ordinance, a public hearing must take place of which at least 15 days' notice must be provided in the newspaper. Discussion on this agenda item concluded.

**Item 5 - Information/Discussion regarding proposed amendments to the Gila County Street Naming and Property Numbering Ordinance.**

Mr. Bolinger advised that the Street Naming and Property Numbering Ordinance was last amended in 1998. The changes being proposed to the Board are to the rural addressing section of the Ordinance, to change from a grid system to a block system. Some of the other changes reflect the grid system to block system changes and the remaining changes are being made to clean up the Ordinance. He then reviewed each section of the Ordinance that is being changed. Discussion on this agenda item concluded.

At this time Chairman Pastor moved to address agenda item 3.

**Item 3 - Presentation/Discussion regarding the Boards, Commissions, and Committees Report and an analysis and evaluation of each BC&C's current status of compliance with applicable statutes, laws, policies and procedures.**

Mr. McDaniel reviewed information contained in the Gila County Boards, Commissions, and Committees notebook that are under the purview of the Gila County Health and Emergency Services Division, as follows: Gila County Board of Health, Gila County Communications Planning Selection Committee, Local Emergency Planning Committee, and Mapping Committee.

Mr. McDaniel provided a compliance checklist for the Gila County Board of Health, which he reviewed with the Board, as follows:

1) Name: Gila County Board of Health
2) Gila County Staff Liaison: Health Department Director is Secretary
3) Legal basis for establishment: A.R.S. §36-182
   - Date of creation: Recreated June 9, 2010

- Bylaws: N/A – Rules of Procedure required – not available
- Charter: N/A
- Legal counsel: County Attorney

4) Assigned areas of responsibility: Investigate and report contagious or infectious disease
5) Membership: 1 Medical Doctor, 1 BOS member and 3 citizens at large by district
- Terms of office: 4 years
- Appointing authority: Board of Supervisors

6) Meeting schedule: Annual meeting in July required; monthly meetings optional
- Location: Gila County Health Department

7) Meeting legal posting and advertising: Open Meeting Laws apply
8) Meeting agendas: Open Meeting Laws apply
9) Meeting minutes: Open Meeting Laws apply
10) Funding sources: Board of Supervisors General Fund; grants
- Amounts: To fund Health Department, not Board of Health

11) Significant actions and accomplishments: None
12) Notes: None

Mr. McDaniel provided then a compliance checklist for the Gila County Communications Planning Selection Committee, which he reviewed with the Board, as follows:
1) Name: Gila County Communications Planning Selection Committee
2) Gila County Staff Liaison: None
3) Legal basis for establishment: Board's general powers
- Date of creation: September 9, 2008
- Bylaws: N/A
- Charter: N/A
- Legal counsel: County Attorney

4) Assigned areas of responsibility: Investigate forming Communications Department
5) Membership: None
- Terms of office: N/A
- Appointing authority: Board of Supervisors

6) Meeting schedule: None
- Location: N/A

7) Meeting legal posting and advertising: Not required
8) Meeting agendas: Not required
9) Meeting minutes: Not required
10) Funding sources: N/A
- Amounts: N/A

11) Significant actions and accomplishments: None
12) Notes: Discussed at a BOS meeting to assist in vendor selection and to investigate advisability of Communications Department to coordinate efforts of

the Information Technology (IT) Department, Sheriff's Office and Emergency Management Services.

Mr. McDaniel further provided a compliance checklist for the Local Emergency Planning Committee, which he reviewed with the Board, as follows:

1) Name: Local Emergency Planning Committee
2) Gila County Staff Liaison: Health & Emergency Services Division Director
3) Legal basis for establishment: A.R.S. §26-344 & US Title 42, Chapter 116
   - Date of creation: May 15, 1989
   - Bylaws: Yes
   - Charter: N/A
   - Legal counsel: County Attorney
4) Assigned areas of responsibility: Preparedness, response, recovery in emergencies
5) Membership: 9 members – A.R.S. prescribed representation
   - Terms of office: Until resignation or replacement
   - Appointing authority: Board of Supervisors originally; Chairman and committee thereafter
6) Meeting schedule: Bi-annual required; as needed otherwise
   - Location: As appropriate
7) Meeting legal posting and advertising: Open Meetings Laws apply
8) Meeting agendas: Open Meetings Laws apply
9) Meeting minutes: Open Meetings Laws apply
10) Funding sources: N/A
   - Amounts: N/A
11) Significant actions and accomplishments: HAZMAT response; purchase incident action plan software
12) Notes: None

Upon reviewing the Local Emergency Planning Committee membership, Vice-Chairman Martin commented that she was uncertain about one member, and she felt that it was important to ensure the members' names were current.

Mr. McDaniel concluded by providing a compliance checklist for the Mapping Committee, which he reviewed with the Board, as follows:

1) Name: Mapping Committee
2) Gila County Staff Liaison: Emergency Services staff
3) Legal basis for establishment: Board of Supervisors' general powers
   - Date of creation: Fall 2007
   - Bylaws: N/A
   - Charter: N/A
   - Legal counsel: County Attorney
4) Assigned areas of responsibility: Countywide mapping issues
5) Membership: --
   - Terms of office: N/A
   - Appointing authority: Board of Supervisors

6) Meeting schedule: As needed; last meeting was mid-2008
   - Location: --
7) Meeting legal posting and advertising: N/A
8) Meeting agendas: N/A
9) Meeting minutes: N/A
10) Funding sources: N/A
   - Amounts: --
11) Significant actions and accomplishments: Report and recommendations submitted to the BOS
12) Notes: None

Upon reviewing the Mapping Committee, Mr. McDaniel advised that the committee was created in the fall of 2007 and the last meeting was held in 2008, so he concluded that this committee has served its life. Supervisor Dawson replied that may not be the case due to the present issue of addressing the possibility of redistricting supervisorial districts. Mr. McDaniel advised that he would look further into the need for this committee.

There being no further business to come before the Board of Supervisors, Chairman Pastor adjourned the meeting at 12:11 p.m.

**APPROVED**:

_____

Michael A. Pastor, Chairman

**ATTEST**:

_____

Marian Sheppard, Chief Deputy Clerk

**BOARD OF EQUALIZATION MINUTES**
**GILA COUNTY, ARIZONA**

Date: September 20, 2011

| | |
|---|---|
| **TOMMIE C. MARTIN**<br>Chairman | **JOHN F. NELSON**<br>Clerk of the Board |
| **SHIRLEY L. DAWSON**<br>Vice-Chairman | By: Marian Sheppard<br>Chief Deputy Clerk |
| **MICHAEL A. PASTOR**<br>Member | Gila County Courthouse<br>Globe, Arizona |

---

PRESENT: Tommie C. Martin (via ITV), Chairman; Shirley Dawson, Vice-Chairman; Michael A. Pastor, Member; Dale Hom, Assessor; Hazel Dillon, Chief Deputy Assessor; Larry Huffer, Chief Appraiser; Bryan Chambers, Chief Deputy County Attorney; and Marian Sheppard, Chief Deputy Clerk.

**Item 1 – Call to Order**

The Gila County Board of Equalization met at 2:13 p.m. this date in the Board of Supervisors hearing room. Chairman Martin asked Vice-Chairman Dawson to chair these hearings as she was in Globe with the petitioners and Chairman Martin was in Payson.

**Item 2 – REGULAR AGENDA ITEMS:**

**A. 2:00 P.M. - Information/Discussion/Action regarding two Petitions for Review of Real Property Valuation for tax year 2012 submitted for Assessor's tax parcel numbers 301-59-055 and 301-59-058, which are owned by Thomas Stedronsky. (Larry Huffer)**

(Note to the Reader: Mr. Stedronksy presented information for items A and B at the same time, so there was one discussion for both agenda items.)

**B. Information/Discussion/Action regarding a Petition for Review of Taxpayer Notice of claim for tax years 2007 through 2011 submitted for Assessor's tax parcel numbers 301-59-055 which is owned by Thomas Stedronsky, and 301-59-056 which is owned by M&I Bank.**

Chairman Dawson called on Mr. Stedronsky, the petitioner, to present his case. Mr. Stedronsky provided several handouts. The first handout was a map and a history of parcels -055, -056 and -058, which are located in Strawberry Creek Foothills. Mr. Stedronsky stated, "Petitions for -055 and -058, I'm wishing to

drop that discussion today. Recent events overshadow that here…I want a one-point case." Chairman Dawson asked Mr. Stedronsky to confirm that he was dropping his appeals on parcels -055 and -058 and he replied, "That is correct. What I will say this afternoon I hope will lead to a decision that will affect all the properties. All of them will be discussed because they address the same problems." Mr. Stedronsky then read aloud a letter he received from the Gila County Assessor's Office in regard to parcel -055 for tax year 2012 that was unsigned and undated, which states, "*Per Planning and Zoning this is an approved subdivision; Gila County has returned the money to the Developer based on the Developer's need to make draws for the development of the road; a statement was recorded last week stating there would be no building permits until the road was brought up to County standards. There was never an illegal sale of these lots; all sales were between a willing buyer and a willing seller.*" Mr. Stedronsky requested that the County provide written proof that this was an approved subdivision. He then addressed an Affidavit of Notice of Gila County Subdivision Code Violation filed and recorded by the Gila County Community Development Division, which states that certain lots within Strawberry Creek Foothills (that area is also known as Strawberry Ridge Estates) located in Strawberry, Arizona was subdivided by Strawberry Ridge Estates, LLC and that the subdivider was in violation of the Gila County Subdivision Regulations in that the street known as Tomahawk Trail has not been completed in accordance with Gila County Street Standards and, therefore, in accordance with 300.09 of the Gila County Subdivision Regulations. Mr. Stedronsky stated that the Tax Officer disputes his claim based on that office's lack of knowledge that Tomahawk Trail was not completed in accordance with Gila County Street Standards until 2011. He stated, "The County is one entity and I submit proof that several departments were aware that Tomahawk Trail had several hazards. During this time I requested everything in writing from Community Development on its stance on the ability to permit. Three times I requested of Bob Gould and finally he sent me a letter, which is Exhibit 4, dated June 15, 2011. Gila County violated the assurance of the set-aside funds, which leads into what the Assessor stated that there was never an illegal sale of the lots…" He then advised that according to Arizona Revised Statutes §42-16251 and §42-16252, if there was a mistake in the use or improvements of the land, letters should have been mailed to all land owners and because of this reason he requested a refund on parcel -055. He stated, "I'm requesting the Assessor to prove to me that a permitable, buildable property as lot -058 is, carries the same value as an unbuildable property as -055 is."

Larry Huffer, Chief Appraiser, acknowledged that this subdivision (Strawberry Ridge Estates) has been troubled with the roadways and that his office took a look at this issue since the Affidavit (Notice of Gila County Subdivision Code Violation) was recorded. To determine the current value of the lots within Strawberry Ridge Estates; For a comparison to lot -055, two lots were sold in the Strawberry Hills Subdivision. He advised that Strawberry Creek Foothills

was recorded on Plat 572 in March of 1980 when the subdivision was created and signed off by one of the Board of Supervisors at that time. He stated that the Public Report issued in late 2006 gives permission to transfer the lots from developer (Strawberry Ridge Estates L.L.C.) to lot purchasers. He stated that lot 39 of Strawberry Creek Foothills sold for $40,000 in July 2011, and lot 7 sold for $14,500, which equates to about $25,000 to $26,000 per acre. He stated that there were not any more subsequent sales of lots in Strawberry Ridge Estates. Mr. Huffer stated, "We took a look at the sale values per acre of these two lots and came up with a value as if the roads were installed properly. If the property (lot -055) had no road issues, the current market value would be near $16,000. Using the factor which takes off 90%, the value comes out to $1,580…" Mr. Huffer then read aloud A.R.S. § 42-16256(A) as previously mentioned by Mr. Stedronsky. He advised Mr. Stedronsky that per statutory requirement, the current owner of lot -056 would have to file a Notice of Claim and Mr. Stedronsky is not the current owner. Mr. Huffer advised that the estimate on lot -055 is $3,518.42 for tax years 2008, 2009 and 2010. He added that there would be a correction for tax year 2011. He then proceeded to address lot -058. He stated, "Since -058 doesn't have a code violation, the estimate of value is $19,192 based on these two sales. They are very comparable properties and are good comps. We were very fortunate to even find comps in that subdivision (Strawberry Creek Foothills)."

Mr. Stedronsky had two issues with Mr. Huffer's statement. He stated, "I understand with ownership and applying for refunds. My opinion is Gila County was negligent in knowing and mailing solutions to this; therefore, I was the owner at the time these problems were in existence and it's not fair to exclude -056 just based on negligence…When I say 'refund', I wrote it as a credit to be applied to future years because I don't know the proceedings." Mr. Huffer replied, "That is up to the County Treasurer." Bryan Chambers, Chief Deputy County Attorney, stated, "The statute is what it says. The Board of Equalization (BOE) can make a determination one way or the other and, if you (Mr. Stedronsky) disagree, you have the ability to appeal. It may not be something you can completely resolve today. If the BOE votes accordingly, you have the ability to appeal later on." Chairman Dawson questioned Mr. Stedronsky on lot -056. He replied that property went into foreclosure with M&I Bank. She stated, "The fact remains, you do not own it." She then asked Mr. Stedronsky the length of time he owned lot -056 and he replied, "February 2007 until December 23, 2010. I will wait for a decision on -056." Mr. Chambers stated, "The BOE will make a decision today." Mr. Stedronsky then referred to the history of the taxes on parcels -055, -056 and -058. He said that on the Monday after the Thanksgiving holiday in 2007, Assessor Dale Hom was kind enough to see him without an appointment. Mr. Stedronsky stated to Mr. Hom, "I tried to tell you lot -058 was nowhere near the values you were asking." According to Mr. Stedronsky, Mr. Hom said, "You don't understand; you are the middle class. You have to pay these types of taxes for the poor people…You can go to Superior Court, but it's a waste of time and money." Mr.

Stedronsky stated, "I did go to Superior (Court)(for the record, it was actually Arizona Tax Court). Mr. Huffer attended and at that time I did get a slight reduction. When I introduced lot -058 as a comparison to -055 and -056, I was told Tomahawk Road was separate in Gila County from taxation. You can respond after why is it Tomahawk one day is separate and taxed at a different level? That is another thing I found unjust." Mr. Hom stated, "I don't remember the 2007 meeting. I surely would not have said the first part of what you said. I don't know if you have it in writing or recorded or however you want to verse that, but I know I would not have said that to you or any other taxpayer. You might have talked to someone else in my office and you have told me later." Hazel Dillon, Chief Deputy Assessor, stated, "I was also there the day you came in. All we had at the front counter was a pleasant conversation. That, in my opinion, is extremely rude and I don't remember that at all. We had a very pleasant conversation." Chairman Dawson stated, "I feel really bad about this 'he said, you said'. There is no proof except we each know the character of Mr. Hom and that is terribly out of character for him and wouldn't find it with keeping his standards and core beliefs of people. Being from a minority, I don't believe he would be talking about classes of people."

Mr. Stedronsky then stated to Mr. Huffer, "In 2000, you said it was separate. You were going to respond." Mr. Huffer replied, "The portion of Strawberry Creek Foothills in which the code violation happened is called Strawberry Ridge Estates. The tax year 2007 values were based on the original 4 tax parcels that made up the portion of Strawberry Foothills that is also known as Strawberry Ridge Estates. For tax year 2008 the land values were based on the developer's asking prices. Tax year 2009 land values were determined by 6 lots that sold within the subdivision (Strawberry Ridge Estates). Subsequently over the years the market turned and we based values on the general downturn in the market." Mr. Stedronsky stated, "This would be separate; therefore, did the sales of lots on Tomahawk have an impact on the Assessor's values of the lots below Strawberry Ridge Estates? And what were the asking prices on the lots below Strawberry Ridge Estates?" Mr. Huffer replied, "As for the asking prices I don't know, but actual valuations of the lots we did not change. If we took these sales, (of Strawberry Ridge Estates) and subjected the parcels below it (below Strawberry Ridge Estates) the land values would have been much higher. I never look at taxes; we look at values strictly."

Chairman Dawson then asked for any questions or comments from the Board. Supervisor Martin asked Mr. Chambers whether the Board could refund money on the lot that Mr. Stedronsky does not currently own. Mr. Chambers replied, "My opinion, based upon the statute is 'no.' The statute allows you to refund if he is the current owner. There is some case law that basically says that the Board can't compensate a moral debt. In other words, there was some rationale he paid taxes on that parcel for some years. Assuming the valuation was wrong for those years, he overpaid his taxes. Case law doesn't allow the Board of Supervisors to pay something that should have been. I don't believe

you have authority to refund something unless you have some statutory authority." The Board then entered into a discussion with Mr. Huffer regarding the values of the subject parcels. Mr. Huffer replied, "On -058, there is 2012 Petition for Review of Real Property Valuation and we recommend reducing the value to $19,182." Chairman Dawson asked Mr. Huffer to review the information for parcels -055, -056 and -058 and to provide a recommendation for each.

With regard to parcel number 301-59-055, Supervisor Martin stated, "I move that we follow the advice of the Assessor with an estimated refund of $3,518.42 for tax years 8, 9 and 10 (2008, 2009 and 2010) barring any fees, penalties or interest." The motion was seconded by Supervisor Pastor and the vote passed unanimously by the Board. (For the record, the written decision of the Board of Equalization that was mailed to Mr. Stedronsky after this hearing states as follows: *Decision for 301-59-055: 301-59-055 The Full Cash Value has been adjusted for tax years 2008, 2009, 2010, and current year 2011 based on the Affidavit recorded on July 6, 2001 in Fee #2011-007523 titled: Notice of Gila County Subdivision Code Violation.*)

Chairman Dawson then asked for a motion on parcel number 301-59-056. Upon motion by Supervisor Pastor, seconded by Supervisor Martin, the Board unanimously denied Mr. Stedronsky's appeal (Petition for Review of Notice of Claim) on parcel number 301-59-056 based on the Arizona Revised Statutes as he is not the owner of said property. [For the record, the written decision of the Board of Equalization that was mailed to Mr. Stedronsky after this hearing states as follows: *Decision for 301-59-056: Only a current owner of a property may file a Notice of Claim. As of June 23, 2011, the postmark date that your Notice of Claim was filed, you were not the owner of the property. Based on Arizona Revised Statute 42-16256: Section A: In the case of real or personal property, correction of errors under this article (Title 42, Chapter 16, Article 6) is limited to the period during which the current owner of record held title to the property, if the owner is a purchaser in good faith and without notice of any error that could have caused proceedings to be initiated to correct the tax roll when the owner purchased the property.*]

Upon motion by Supervisor Pastor, seconded by Supervisor Martin, the Board unanimously agreed with the Assessor's decision to reduce the full cash value of parcel number 301-59-058 to $19,182 for tax year 2012.

Chairman Dawson next addressed agenda item C, an appeal submitted by Dina R. Galasinni, who, with Gregory Larson own parcel number 301-59-051.

**C. 2:45 P.M. - Information/Discussion/Action regarding a Petition for Review of Taxpayer Notice of Claim for tax years 2008 through 2010 submitted for Assessor's tax parcel number 301-59-051, which is owned by Gregory Larson and Dina Galassini**

Ms. Galasinni stated, "I'm here today in essence to either settle for payment or a refund regarding the same kind of situation that Mr. Stedronsky had…There are two parts to my presentation, which are somewhat intertwined…There are different departments of an agency such as Gila County. You may or may not be aware that August 7, 2007, was a public report deadline for road infrastructure. It is the date in which the infrastructure was not approved and the County was well aware and should have notified the property owners back then…There was continued gross negligence on the County's part. February 23, 2007, there was an assurance of subdivision improvements and actually approved by the Board of Supervisors. The purchase was a legal sale until Gila County's gross negligence began. Gila County agreed to approve the subdivision assurance of improvements with set-aside funds. Here are the recorded documents for your records. The Gila County Board of Supervisors had $716,000 in a fund. When that was recorded, that balance only reflected $580,000. It appears the County allowed the set-aside fund to be utilized as a draw fund, like a draw fund, instead of abiding by fund terms and conditions. Normally counties keep a check prior to the two-year period when the bond is in place. They go and inspect the road right before the bond ends and tells the developer to 'fix this', put a violation on it or whatever. It's two parts: part of the set-aside fund and a violation of Gila County Subdivision Regulations dated in the year 2002…" Ms. Galasinni then read aloud various sections of the County's Subdivision Regulations. She continued, "We were highly taken advantage of in my opinion. We like our lot, but we didn't buy that lot with any stipulation of the risk of burden of maintaining a mile long asphalt road. You pay $143,000 for a lot and then realize after you have to take care of a mile long road." Ms. Galasinni again referred to other sections of Gila County's Subdivision Regulations. She stated that the County failed to require the subdivision to provide for maintenance and/or repair of improvements in the course of the construction, which she believes is gross negligence and that it is unacceptable to her as a tax-paying property owner. She also believes the County was always aware there was never a final approval of the road infrastructure. She then asked Mr. Huffer his opinion of the value of her property over the past 3-4 years and the current value until the roads are approved.

Mr. Huffer stated, "Looking at those 2 sales and attributing a value per acre and take 90% off, it comes to $2,100." Chairman Dawson asked Ms. Galasinni, "Did you provide us with what you feel the full cash value should be?" Ms. Galasinni replied, "The full cash value based on taxes we paid in 2007 is $433 and is calculated as such. Larry, can you please tell me?" Mr. Huffer replied, "We looked at the taxes you stated to me and worked it backwards. Four original parcels make up the new part of Strawberry Creek Foothills (Strawberry Ridge Estates). Looking at its current value based on the 2 lots that sold in Strawberry Creek Foothills, it's $2,100. We wanted to be equitable with Mr. Stedronsky and yourself; it is actually less than you

requested. The estimated refund would be for tax years 8, 9 and 10 (2008, 2009 and 2010) of $5,408.31. The reason it's higher than Mr. Stedronsky is because the size of the parcel is 2/10 of an acre larger. More than likely we will keep the value the same at $2,100 until something gets done to the road." Ms. Galasinni replied, "I want to thank you. We always suspected, but didn't really understand. Recently we hired an attorney to help us understand and we were shocked at everything that was going on. I don't mind paying taxes if this was an approved subdivision, but we got highly taken advantage and I'm happy you recognized it."

Chairman Dawson asked for a motion at this time. Supervisor Martin made a motion to accept the Assessor's current estimate of $2,100 for tax parcel number 301-59-051 and provide an estimated refund of $5,408.31 for tax years 2008, 2009 and 2010 barring any other penalties, interest or fees. The motion was seconded by Supervisor Pastor and unanimously approved by the Board.

Chairman Dawson, on behalf of the Board of Supervisors, thanked Mr. Hom and his staff for their efforts. There being no further business to come before the Board of Equalization, Chairman Dawson adjourned the meeting at 3:20 p.m.

**APPROVED**:

_____

Shirley L. Dawson, Acting Chairman

**ATTEST**:

_____

Marian Sheppard, Chief Deputy Clerk

**ARF-1017** **5- M**

**Regular BOS Meeting**

**Meeting Date:** 01/10/2012

**Reporting Period:** Report for County Manager Approved Contracts Under $50,000 for weeks ending 12-10-11 and 12-17-11

**Submitted For:** Joseph Heatherly

**Submitted By:** Valrie Bejarano, Contracts Support Specialist, Finance Department

---

## Information

### Subject

Report for County Manager Approved Contract Under $50,000 for weeks ending 12-10-11 and 12-17-11.

### Suggested Motion

Acknowledgment of contracts under $50,000, which have been approved by the County Manager for the weeks of December 10, 2011 to December 16, 2011, and December 17, 2011, to December 23, 2011.

---

## Attachments

Agreement 120111 Glass Masters Inc.

Agreement 111811 Noble Building LLC

Agreement 111911 Noble Building LLC

Agreement 112011 Noble Building LLC

Agreement 112111 Mountain Retreat Builders

Agreement 120811 Excel Pump & Well Service

Agreement 121011 Green Tree Construction

Agreement 121311 Green Tree Construction

Agreement 121411 Rodriguez Construction

Contract 10i-DMBS-0127 Konica Minolta

Approved Contracts Under $50K for Week End 12-10-11 & 12-17-11

**Tommie C. Martin, District I**
P.O. Box 2297 Payson, AZ. 85547
(928) 474-2029

**Michael A. Pastor, District II**
1400 E. Ash St. Globe, AZ. 85501
(928) 425-3231 Ext. 8753

**Shirley L. Dawson, District III**
1400 E. Ash St. Globe, AZ. 85501
(928) 425-3231 Ext. 8511

**GILA COUNTY**
www.gilacountyaz.gov

**Don E. McDaniel Jr., County Manager**
Phone (928) 425-3231 Ext.8761

**Joseph T. Heatherly, Finance Director**
Phone (928) 425-3231 Ext. 8743

FAX (928) 425-0319
TTY: 7-1-1

## SERVICE AGREEMENT NO. 120111

## SLIDING LOBBY GLASS INSTALLATION
## PUBLIC WORKS ADMINISTRATION BUILDING

**THIS AGREEMENT,** made and entered into this 14th day of December, **2011**, by and between the Gila County Board of Supervisors, a political subdivision of the State of Arizona, hereinafter designated the County, and Glass Masters Inc., of the City of Payson, State of Arizona, hereinafter designated the Contractor.

**WITNESSETH:** The Contractor, for and in consideration of the sum to be paid him by the County, in the manner and at the time hereinafter provided, and of the other covenants and agreement's herein contained, hereby agrees, for himself, his heirs, administrators, successors, and assigns as follows:

**ARTICLE I – SCOPE OF SERVICES:** The Contractor shall provide for the complete provision in the scope of work below of the sliding glass window installation at the Public Works Administration building in a good and workmanlike and substantial manner and to the satisfaction of the County under the direction of the Gila County Facilities Manager or designee.

Contractor shall provide all materials and installation to replace the existing stationary windows in the Public Works Administration Building reception area and replace with sliding pass through windows.

**Specifications**

- Two (2) 4040 Florence Pass Thru Windows – Laminated Safety Glass
- One (1) Duranodic Bronze – Block Size

**Fee**

| Description | Qty | Unit Cost | Total |
|---|---|---|---|
| Pass Thru Window | 2 | 574.19 | 1,148.38 |
| Labor to cut glass, prep frames and install on site | | 450.00 | 450.00 |
| Packaging and shipping costs | | 115.00 | 15.00 |
| Subtotal | | | 1,713.38 |
| Tax | | | 111.62 |
| Grand Total | | | $1,825.00 |

**ARTICLE II – TERMINATION:** The County reserves the right to terminate the Contract, in whole or in part at any time, when in the best interest of the County, without penalty or recourse. Upon receipt of the written notice, the Contractor shall stop all work as directed in the notice. Contractor shall not be compensated for any work performed under the contract that is performed after receipt of a written notice terminating the contract.

**ARTICLE III - INDEMNIFICATION:** Contractor shall indemnify, defend, save and hold harmless the County of Gila and its officers, officials, agents, and employees (hereinafter referred to as "Indemnitee") from and against any and all claims, actions, liabilities, damages, losses, or expenses (including court costs, attorneys' fees, and costs of claim processing, investigation and litigation) (hereinafter referred to as "Claims") for bodily injury or personal injury (including death), or loss or damage to tangible or intangible property caused, or alleged to be caused, in whole or in part, by the negligent or willful acts or omissions of Contractor or any of its owners, officers, directors, agents, employees or subcontractors. This indemnity includes any claim or amount arising out of or recovered under the Workers' Compensation Law or arising out of the failure of such contractor to conform to any federal, state or local law, statute, ordinance, rule, regulation or court decree. It is the specific intention of the parties that the Indemnitee shall, in all instances, except for Claims arising solely from the negligent or willful acts or omissions of the Indemnitee, be indemnified by Contractor from and against any and all claims. It is agreed that Contractor will be responsible for primary loss investigation, defense and judgment costs where this indemnification is applicable. In consideration of the award of this contract, the Contractor agrees to waive all rights of subrogation against the County, its officers, officials, agents and employees for losses arising from the work performed by the Contractor for the County.

**ARTICLE IV – INSURANCE REQUIREMENTS:** Contractor and subcontractors shall procure and maintain until all of their obligations have been discharged, including any warranty periods under this Contract are satisfied, insurance against claims for injury to persons or damage to property which may arise from or in connection with the performance of the work hereunder by the Contractor, his agents, representatives, employees or subcontractors.

The insurance requirements herein are minimum requirements for this Contract and in no way limit the indemnity covenants contained in this Contract. The County in no way warrants that the minimum limits contained herein are sufficient to protect the Contractor from liabilities that might arise out of the performance of the work under this contract by the Contractor, his agents, representatives, employees or subcontractors and Contractor is free to purchase additional insurance as may be determined necessary.

A. **MINIMUM SCOPE AND LIMITS OF INSURANCE:** Contractor shall provide coverage with limits of liability not less than those stated below.

1. **Commercial General Liability – Occurrence Form**
   Policy shall include bodily injury, property damage and broad form contractual liability coverage.
   - General Aggregate $2,000,000
   - Products – Completed Operations Aggregate $1,000,000
   - Personal and Advertising Injury $1,000,000
   - Each Occurrence $1,000,000

   a. The policy shall be endorsed to include the following additional insured language: **"The County of Gila shall be named as an additional insured with respect to liability arising out of the activities performed by, or on behalf of the Contractor".**

2. **Worker's Compensation and Employers' Liability**

| | |
|---|---|
| Workers' Compensation | Statutory |
| Employers' Liability | |
| Each Accident | $100,000 |
| Disease – Each Employee | $100,000 |
| Disease – Policy Limit | $500,000 |

a. Policy shall contain a **waiver of subrogation** against the County of Gila.

3. **Professional Liability (Errors and Omissions Liability)**

| | |
|---|---|
| Each Claim | $1,000,000 |
| Annual Aggregate | $2,000,000 |

a. In the event that the professional liability insurance required by this Contract is written on a claims-made basis, Contractor warrants that any retroactive date under the policy shall precede the effective date of this Contract; and that either continuous coverage will be maintained or an extended discovery period will be exercised for a period of two (2) years beginning at the time work under this Contract is completed.

B. **ADDITIONAL INSURANCE REQUIREMENTS:** The policies shall include, or be endorsed to include, the following provisions:

1. On insurance policies where the County of Gila is named as an additional insured, the County of Gila shall be an additional insured to the full limits of liability purchased by the Contractor even if those limits of liability are in excess of those required by this Contract.
2 The Contractor's insurance coverage shall be primary insurance and non-contributory with respect to all other available sources.
3. Coverage provided by the Contractor shall not be limited to the liability assumed under the indemnification provisions of this Contract.

C. **NOTICE OF CANCELLATION:** Each insurance policy required by the insurance provisions of this Contract shall provide the required coverage and shall not be suspended, voided, canceled, reduced in coverage or endorsed to lower limits except after thirty (30) days prior written notice has been given to the County. Such notice shall be sent directly to **Gila County Purchasing Department, 1400 E. Ash St., Globe, AZ, 85501** and shall be sent by certified mail, return receipt requested.

D. **ACCEPTABILITY OF INSURERS:** Insurance is to be placed with insurers duly licensed or approved unlicensed companies in the state of Arizona and with an "A.M. Best" rating of not less than B+ VI. The County in no way warrants that the above-required minimum insurer rating is sufficient to protect the Contractor from potential insurer insolvency.

E. **VERIFICATION OF COVERAGE:** Contractor shall furnish the County with certificates of insurance (ACORD form or equivalent approved by the County) as required by this Contract. The certificates for each insurance policy are to be signed by a person authorized by that insurer to bind coverage on its behalf.

***All certificates and endorsements are to be received and approved by the County before work commences.*** Each insurance policy required by this Contract must be in effect at or prior to commencement of work under this Contract and remain in effect for the duration of the project.

Failure to maintain the insurance policies as required by this Contract or to provide evidence of renewal is a material breach of contract.

All certificates required by this Contract shall be sent directly to **Gila County Purchasing Department, 1400 E. Ash St., Globe, AZ, 85501.** The County project/contract number and project description shall be noted on the certificate of insurance. The County reserves the right to require complete, certified copies of all insurance policies required by this Contract at any time.

F. **SUBCONTRACTORS:** Contractors' certificate(s) shall include all subcontractors as additional insured's under its policies **or** Contractor shall furnish to the County separate certificates and endorsements for each subcontractor. All coverage's for subcontractors shall be subject to the minimum requirements identified above.

G. **APPROVAL:** Any modification or variation from the insurance requirements in this Contract shall be made by the County Attorney, whose decision shall be final. Such action will not require a formal Contract amendment, but may be made by administrative action.

**ARTICLE V – LEGAL ARIZONA WORKERS ACT COMPLIANCE:** Contractor hereby warrants that it will at all times during the term of this Contract comply with all federal immigration laws applicable to Contractor's employment of its employees, and with the requirements of A.R.S. § 23-214 (A) (together the "State and Federal Immigration Laws"). Contractor shall further ensure that each subcontractor who performs any work for Contractor under this contract likewise complies with the State and Federal Immigration Laws. County shall have the right at any time to inspect the books and records of Contractor and any subcontractor in order to verify such party's compliance with the State and Federal Immigration Laws.

Any breach of Contractor's or any subcontractor's warranty of compliance with the State and Federal Immigration Laws, or of any other provision of this section, shall be deemed to be a material breach of this Contract subjecting Contractor to penalties up to and including suspension or termination of this Contract. If the breach is by a subcontractor, and the subcontract is suspended or terminated as a result, Contractor shall be required to take such steps as may be necessary to either self-perform the services that would have been provided under the subcontract or retain a replacement subcontractor as soon as possible so as not to delay project completion.

Contractor shall advise each subcontractor of County's rights, and the subcontractor's obligations, under this Article by including a provision in each subcontract substantially in the following form: "Subcontractor hereby warrants that it will at all times during the term of this contract comply with all federal immigration laws applicable to Subcontractor's employees, and with the requirements of A.R.S. § 23-214 (A). Subcontractor further agrees that County may inspect the Subcontractor's books and records to insure that Subcontractor is in compliance with these requirements. Any breach of this paragraph by Subcontractor will be deemed to be a material breach of this contract subjecting Subcontractor to penalties up to and including suspension or termination of this contract."

Any additional costs attributable directly or indirectly to remedial action under this Article shall be the responsibility of Contractor. In the event that remedial action under this Article results in delay to one or more tasks on the critical path of Contractor's approved construction or critical milestones schedule, such period of delay shall be deemed excusable delay for which Contractor shall be entitled to an extension of time, but not costs.

**ARTICLE VI – LAWS AND ORDINANCES:** This agreement shall be enforced under the laws of the State of Arizona. Contractor shall maintain in current status all Federal, State and Local licenses and permits required for the operation of the business conducted by the Contractor. The Contractor shall comply with the applicable provisions of the Americans with Disabilities Act (Public Law 101-336, 42 U.S.C. 12101-12213) and applicable federal regulations under the Act.

**ARTICLE VII– ANTI-TERRORISM WARRANTY:** Pursuant to A.R.S. §35-393.06(B) and 35-391.06(A) the Contractor certifies that it does not have scrutinized business operations in Iran or Sudan and that they are in compliance with the Export Administration Act and not on the Excluded Parties List.

**ARTICLE VIII – CANCELLATION:** This agreement is subject to cancellation pursuant to A.R.S. §38-511. If the Agreement is terminated, the county shall be liable only for payment for services rendered and accepted material received by the County before the effective date of termination.

**ARTICLE IX– TERM:** Contract shall be effective date signed by the County Manager and expires December 31, 2011.

**ARTICLE X – PAYMENT/BILLING:** Contractor shall be paid a flat fee of **$ 1,825.00** for completion of the project outlined in the scope of services.

All invoices shall be submitted to Gila County Accounts Payable, 1400 E. Ash St, Globe, Arizona and include the following information:

- Purchase Order Number
- Contract Number
- Invoice Number
- Service Location
- Vendor Name and Address
- Description of Service

Any alterations to the scope of work resulting in a change in cost must have prior written approval by the County. Any unauthorized work may result in non-payment to the vendor.

Gila County employs a "Net 15" payment term for services meaning the payment will be issued fifteen (15) days from the date the County receives the invoice from the Contractor. Purchase orders sent to the Contractor reflect these terms and conditions.

The Contractor shall have a current I.R.S. W-9 form on file with the County unless not required by law. The County shall not remit payment if the Contractor does not have a current W-9.

**IN WITNESS WHEREOF,** two (2) identical counterparts of this contract, each which shall include original signatures and for all purposes be deemed an original thereof, have been duly executed by the parties hereinabove named, on the date and year first above written.

**GILA COUNTY**

**Don E. McDaniel Jr., County Manager**

**Date:** 12/14/11

**GLASS MASTERS INC.**

**Signature**

Toby Egbert

**Print Name**

**Date:** 12/08/2011

**Approved As To Form**

Bryan B. Chambers
**Chief Deputy Gila County Attorney**

**Tommie C. Martin, District I**
P.O. Box 2297 Payson, AZ. 85547
(928) 474-2029

**Michael A. Pastor, District II**
1400 E. Ash St. Globe, AZ. 85501
(928) 425-3231 Ext. 8753

**Shirley L. Dawson, District III**
1400 E. Ash St. Globe, AZ. 85501
(928) 425-3231 Ext. 8511

**GILA COUNTY**
www.gilacountyaz.gov

**Don E. McDaniel Jr., County Manager**
Phone (928) 425-3231 Ext.8761

**Joseph T. Heatherly, Finance Director**
Phone (928) 425-3231 Ext. 8743

FAX (928) 425-0319
TTY: 7-1-1

**SERVICE AGREEMENT NO. 111811**

**WEATHERIZATION PROJECT NO. HH#7632**

**THIS AGREEMENT,** made and entered into this 12th day of December, **2011**, by and between the Gila County Board of Supervisors, a political subdivision of the State of Arizona, hereinafter designated the County, and Noble Building LLC, of the City of Payson, State of Arizona, hereinafter designated the Contractor.

**WITNESSETH:** The Contractor, for and in consideration of the sum to be paid him by the County, in the manner and at the time hereinafter provided, and of the other covenants and agreement's herein contained, hereby agrees, for himself, his heirs, administrators, successors, and assigns as follows:

**ARTICLE I – SCOPE OF SERVICES:** The Contractor shall provide for the complete provision in the scope of work below of Weatherization Project HH#7632 in a good and workmanlike and substantial manner and to the satisfaction of the County under the direction of the Housing Services Manager or designee.

All work performed by the Contractor shall be completed to local codes and regulation per Gila County and the State of Arizona and consistent with all Weatherization guidelines.

Contractor shall:

| Work Description | *Fee |
|---|---|
| 1. Install new high efficiency 13 SEER heat pump with matching air handler and auxiliary heat element sized properly for the home. New unit to include manual J calculations. To include new thermostat and all electrical connections. | $ 5,220.00 |
| 2. Seal all ductwork to 1 Pascal or less. | $ 1,046.50 |
| 3. Infiltration/insulation misalignment repair. | $ 396.00 |
| 4. Remove and cap swamp cooler. | $ 300.00 |
| 5. Abandon cooler ducts, fill with insulation, remove and seal cooler registers. | $ 837.20 |
| | |

| | |
|---|---|
| 6. Replace a 14"x20" glass in single pane window. | $ 90.00 |
| 7. Roof leak repair. | $ 227.50 |
| Sub-Total | $ 8,117.20 |
| Taxes | $ 506.51 |
| Grand Total | $ 8,623.71 |

**ARTICLE II – TERMINATION:** The County reserves the right to terminate the Contract, in whole or in part at any time, when in the best interest of the County, without penalty or recourse. Upon receipt of the written notice, the Contractor shall stop all work as directed in the notice. If the contract is terminated, the County shall be liable only for the services rendered under this contract and accepted material received by the County before the effective date of termination.

**ARTICLE III - INDEMNIFICATION:** Contractor shall indemnify, defend, save and hold harmless the County of Gila and its officers, officials, agents, and employees (hereinafter referred to as "Indemnitee") from and against any and all claims, actions, liabilities, damages, losses, or expenses (including court costs, attorneys' fees, and costs of claim processing, investigation and litigation) (hereinafter referred to as "Claims") for bodily injury or personal injury (including death), or loss or damage to tangible or intangible property caused, or alleged to be caused, in whole or in part, by the negligent or willful acts or omissions of Contractor or any of its owners, officers, directors, agents, employees or subcontractors. This indemnity includes any claim or amount arising out of or recovered under the Workers' Compensation Law or arising out of the failure of such contractor to conform to any federal, state or local law, statute, ordinance, rule, regulation or court decree. It is the specific intention of the parties that the Indemnitee shall, in all instances, except for Claims arising solely from the negligent or willful acts or omissions of the Indemnitee, be indemnified by Contractor from and against any and all claims. It is agreed that Contractor will be responsible for primary loss investigation, defense and judgment costs where this indemnification is applicable. In consideration of the award of this contract, the Contractor agrees to waive all rights of subrogation against the County, its officers, officials, agents and employees for losses arising from the work performed by the Contractor for the County.

**ARTICLE IV – INSURANCE REQUIREMENTS:** Contractor and subcontractors shall procure and maintain until all of their obligations have been discharged, including any warranty periods under this Contract are satisfied, insurance against claims for injury to persons or damage to property which may arise from or in connection with the performance of the work hereunder by the Contractor, his agents, representatives, employees or subcontractors.

The insurance requirements herein are minimum requirements for this Contract and in no way limit the indemnity covenants contained in this Contract. The County in no way warrants that the minimum limits contained herein are sufficient to protect the Contractor from liabilities that might arise out of the performance of the work under this contract by the Contractor, his agents, representatives, employees or subcontractors and Contractor is free to purchase additional insurance as may be determined necessary.

A. **MINIMUM SCOPE AND LIMITS OF INSURANCE:** Contractor shall provide coverage with limits of liability not less than those stated below.

1. **Commercial General Liability – Occurrence Form**

Policy shall include bodily injury, property damage and broad form contractual liability coverage.

- General Aggregate $2,000,000
- Products – Completed Operations Aggregate $1,000,000
- Personal and Advertising Injury $1,000,000
- Each Occurrence $1,000,000

a. The policy shall be endorsed to include the following additional insured language: **"The County of Gila shall be named as an additional insured with respect to liability arising out of the activities performed by, or on behalf of the Contractor".**

2. **Worker's Compensation and Employers' Liability**

| | |
|---|---|
| Workers' Compensation | Statutory |
| Employers' Liability | |
| Each Accident | $100,000 |
| Disease – Each Employee | $100,000 |
| Disease – Policy Limit | $500,000 |

a. Policy shall contain a **waiver of subrogation** against the County of Gila.

3. **Professional Liability (Errors and Omissions Liability)**

| | |
|---|---|
| Each Claim | $1,000,000 |
| Annual Aggregate | $2,000,000 |

a. In the event that the professional liability insurance required by this Contract is written on a claims-made basis, Contractor warrants that any retroactive date under the policy shall precede the effective date of this Contract; and that either continuous coverage will be maintained or an extended discovery period will be exercised for a period of two (2) years beginning at the time work under this Contract is completed.

B. **ADDITIONAL INSURANCE REQUIREMENTS:** The policies shall include, or be endorsed to include, the following provisions:

1. On insurance policies where the County of Gila is named as an additional insured, the County of Gila shall be an additional insured to the full limits of liability purchased by the Contractor even if those limits of liability are in excess of those required by this Contract.
2. The Contractor's insurance coverage shall be primary insurance and non-contributory with respect to all other available sources.
3. Coverage provided by the Contractor shall not be limited to the liability assumed under the indemnification provisions of this Contract.

C. **NOTICE OF CANCELLATION:** Each insurance policy required by the insurance provisions of this Contract shall provide the required coverage and shall not be suspended, voided, canceled, reduced in coverage or endorsed to lower limits except after thirty (30) days prior written notice has been given to the County. Such notice shall be sent directly to **Gila County Purchasing Department, 1400 E. Ash St., Globe, AZ, 85501** and shall be sent by certified mail, return receipt requested.

D. **ACCEPTABILITY OF INSURERS:** Insurance is to be placed with insurers duly licensed or approved unlicensed companies in the state of Arizona and with an "A.M. Best" rating of not less than B+ VI. The County in no way warrants that the above-required minimum insurer rating is sufficient to protect the Contractor from potential insurer insolvency.

E. **VERIFICATION OF COVERAGE:** Contractor shall furnish the County with certificates of insurance (ACORD form or equivalent approved by the County) as required by this Contract. The certificates

for each insurance policy are to be signed by a person authorized by that insurer to bind coverage on its behalf.

***All certificates and endorsements are to be received and approved by the County before work commences.*** Each insurance policy required by this Contract must be in effect at or prior to commencement of work under this Contract and remain in effect for the duration of the project. Failure to maintain the insurance policies as required by this Contract or to provide evidence of renewal is a material breach of contract.

All certificates required by this Contract shall be sent directly to **Gila County Purchasing Department, 1400 E. Ash St., Globe, AZ, 85501.** The County project/contract number and project description shall be noted on the certificate of insurance. The County reserves the right to require complete, certified copies of all insurance policies required by this Contract at any time.

F. **SUBCONTRACTORS:** Contractors' certificate(s) shall include all subcontractors as additional insured's under its policies **or** Contractor shall furnish to the County separate certificates and endorsements for each subcontractor. All coverage's for subcontractors shall be subject to the minimum requirements identified above.

G. **APPROVAL:** Any modification or variation from the insurance requirements in this Contract shall be made by the County Attorney, whose decision shall be final. Such action will not require a formal Contract amendment, but may be made by administrative action.

**ARTICLE V – LEGAL ARIZONA WORKERS ACT COMPLIANCE:** Contractor hereby warrants that it will at all times during the term of this Contract comply with all federal immigration laws applicable to Contractor's employment of its employees, and with the requirements of A.R.S. § 23-214 (A) (together the "State and Federal Immigration Laws"). Contractor shall further ensure that each subcontractor who performs any work for Contractor under this contract likewise complies with the State and Federal Immigration Laws. County shall have the right at any time to inspect the books and records of Contractor and any subcontractor in order to verify such party's compliance with the State and Federal Immigration Laws.

Any breach of Contractor's or any subcontractor's warranty of compliance with the State and Federal Immigration Laws, or of any other provision of this section, shall be deemed to be a material breach of this Contract subjecting Contractor to penalties up to and including suspension or termination of this Contract. If the breach is by a subcontractor, and the subcontract is suspended or terminated as a result, Contractor shall be required to take such steps as may be necessary to either self-perform the services that would have been provided under the subcontract or retain a replacement subcontractor as soon as possible so as not to delay project completion.

Contractor shall advise each subcontractor of County's rights, and the subcontractor's obligations, under this Article by including a provision in each subcontract substantially in the following form: "Subcontractor hereby warrants that it will at all times during the term of this contract comply with all federal immigration laws applicable to Subcontractor's employees, and with the requirements of A.R.S. § 23-214 (A). Subcontractor further agrees that County may inspect the Subcontractor's books and records to insure that Subcontractor is in compliance with these requirements. Any breach of this paragraph by Subcontractor will be deemed to be a material breach of this contract subjecting Subcontractor to penalties up to and including suspension or termination of this contract."

Any additional costs attributable directly or indirectly to remedial action under this Article shall be the responsibility of Contractor. In the event that remedial action under this Article results in delay to one or more tasks on the critical path of Contractor's approved construction or critical milestones schedule, such period of delay shall be deemed excusable delay for which Contractor shall be entitled to an extension of time, but not costs.

**ARTICLE VI – LAWS AND ORDINANCES:** This agreement shall be enforced under the laws of the State of Arizona. Contractor shall maintain in current status all Federal, State and Local licenses and permits required for the operation of the business conducted by the Contractor. The Contractor shall comply with the applicable provisions of the Americans with Disabilities Act (Public Law 101-336, 42 U.S.C. 12101-12213) and applicable federal regulations under the Act.

**ARTICLE VII– ANTI-TERRORISM WARRANTY:** Pursuant to A.R.S. §35-397 the Contractor certifies that it does not have scrutinized business operations in Iran or Sudan and that they are in compliance with the Export Administration Act and not on the Excluded Parties List.

**ARTICLE VIII – CANCELLATION:** This agreement is subject to cancellation pursuant to A.R.S. §38-511. If the Agreement is terminated, the county shall be liable only for payment for services rendered and accepted material received by the County before the effective date of termination.

**ARTICLE IX – RELATIONSHIP OF THE PARTIES:** Contractor is an independent contractor of the County. Contractor represents that he has or will secure, at his own expense, all personnel required in performing the services under this contract. Such personnel shall not be employees of or have any contractual relationship with the County. All personnel engaged in work under this contract shall be fully qualified and shall be authorized or permitted under State and local law to perform such services. Contractor warrants that he has obtained or will obtain Worker's Compensation Insurance for his employees working on this contract and that any subcontractors will likewise obtain Worker's Compensation Insurance for of their employees working on this contract. It is further agreed by Contractor that he shall obey all state and federal statutes, rules, and regulations which are applicable to provisions of the services called for herein. Neither Contractor nor any employee of the Contractor shall be deemed an officer, employee, or agent of the County.

**ARTICLE X – NON-APPROPRIATIONS CLAUSE:** Contractor acknowledges that the County is a governmental entity, and the contract validity is based upon the availability of public funding under its authority. In the event that public funds are unavailable and not appropriated for the performance of County's obligations under this contract, then this contract shall automatically expire without penalty to County after written notice to Contractor of the unavailability and non-appropriation of public funds. It is expressly agreed that the County shall only activate this non-appropriation provision as an emergency fiscal measure. The County shall not activate this non-appropriation provision for its convenience, to circumvent the requirements of this contract, or to enable the County to contract with another Contractor for the same supplies or services covered under this Addendum.

**ARTICLE XI – ENTIRE CONTRACT CLAUSE:** The Contractor and the County have read this Contract and agree to be bound by all of its terms, and further agree that it constitutes the entire contract

between the two parties and may only be modified by a written mutual contract signed by the parties. No oral agreement or oral provision outside this Contract shall have any force or effect

**ARTICLE XII – NON-WAIVER OF ENFORCEABILITY:** Failure of the County to enforce, at any time, any of the provisions of this Contract, or to request at any time performance by Contractor of any of the provisions hereof, shall in no way be construed to be a waiver of such provisions, nor in any way affect the validity of this contract or any part thereof, or the right of the County to enforce each and every provision

**ARTICLE XIII – GOVERNING LAW:** Both parties agree that this Contract shall be governed by the laws of the state of Arizona. The parties further agree that the jurisdiction for any legal disputes arising out of this Contract shall be the Superior Court of the State of Arizona. The parties agree that even if this Contract does not specifically reference any provision required by state or federal law, those state and federally required provisions are incorporated into this Contract by this reference as though they were specifically listed herein.

**ARTICLE XIV– TERM:** Contract shall be effective date signed by the County Manager and expires February 15, 2012.

**ARTICLE XV – PAYMENT/BILLING:** Contractor shall be paid a flat fee of **$ 8,623.71** for completion of the project as outlined in the Scope of Services.

All invoices shall be submitted to Gila County Accounts Payable, 1400 E. Ash St, Globe, Arizona and include the following information:

- Purchase Order Number
- Contract Number
- Invoice Number
- Service Location
- Vendor Name and Address
- Description of Service

Any alterations to the scope of work resulting in a change in cost must have prior written approval by the County. Any unauthorized work may result in non-payment to the vendor.

Gila County employs a "Net 15" payment term for services meaning the payment will be issued fifteen (15) days from the date the County receives the invoice from the Contractor. Purchase orders sent to the Contractor reflect these terms and conditions.

The Contractor shall have a current I.R.S. W-9 form on file with the County unless not required by law. The County shall not remit payment if the Contractor does not have a current W-9.

**IN WITNESS WHEREOF,** two (2) identical counterparts of this contract, each which shall include original signatures and for all purposes be deemed an original thereof, have been duly executed by the parties hereinabove named, on the date and year first above written.

**GILA COUNTY**

**Don E. McDaniel Jr., County Manager**

**Date:** 12/14/11

Noble Building llc

~~**NOBLE CONSTRUCTION**~~

**Signature**

Jedidiah Byron Tamenhous

**Print Name**

**Date:** 12-7-11

**APPROVED AS TO FORM**

**Bryan B. Chambers, Chief Deputy County Attorney**
**for Daisy Flores, County Attorney**

**Tommie C. Martin, District I**
P.O. Box 2297 Payson, AZ. 85547
(928) 474-2029

**Michael A. Pastor, District II**
1400 E. Ash St. Globe, AZ. 85501
(928) 425-3231 Ext. 8753

**Shirley L. Dawson, District III**
1400 E. Ash St. Globe, AZ. 85501
(928) 425-3231 Ext. 8511

**GILA COUNTY**
www.gilacountyaz.gov

**Don E. McDaniel Jr., County Manager**
Phone (928) 425-3231 Ext.8761

**Joseph T. Heatherly, Finance Director**
Phone (928) 425-3231 Ext. 8743

FAX (928) 425-0319
TTY: 7-1-1

**SERVICE AGREEMENT NO. 111911**

**WEATHERIZATION PROJECT NO. HH#7002**

**THIS AGREEMENT,** made and entered into this 14th day of December, **2011**, by and between the Gila County Board of Supervisors, a political subdivision of the State of Arizona, hereinafter designated the County, and Noble Building LLC, of the City of Payson, State of Arizona, hereinafter designated the Contractor.

**WITNESSETH:** The Contractor, for and in consideration of the sum to be paid him by the County, in the manner and at the time hereinafter provided, and of the other covenants and agreement's herein contained, hereby agrees, for himself, his heirs, administrators, successors, and assigns as follows:

**ARTICLE I – SCOPE OF SERVICES:** The Contractor shall provide for the complete provision in the scope of work below of Weatherization Project HH#7002 in a good and workmanlike and substantial manner and to the satisfaction of the County under the direction of the Housing Services Manager or designee.

All work performed by the Contractor shall be completed to local codes and regulations per Gila County and the State of Arizona and consistent with all Weatherization guidelines.

Contractor shall:

| Work Description | *Fee |
|---|---|
| 1. Seal all ductwork to 1 Pascal or less | $ 837.20 |
| 2. Infiltration | $ 400.00 |
| 3. Install sun screens, 1 on east wall, 4 on west wall and 4 on south wall (6 total) screen material to be 80% UV or better. | $ 691.20 |
| 4. Service cooler-Install new pads, new motor, new pump, clean out pan and provide grill lid or cookie sheet. | $ 780.00 |
| 5. Replace flex line and ball valve on range and furnace | $ 204.00 |
| | |
| | |

| | |
|---|---|
| Sub-Total | $ 2,912.40 |
| Taxes | $ 184.06 |
| Grand Total | $ 3,096.46 |

**ARTICLE II – TERMINATION:** The County reserves the right to terminate the Contract, in whole or in part at any time, when in the best interest of the County, without penalty or recourse. Upon receipt of the written notice, the Contractor shall stop all work as directed in the notice. If the contract is terminated, the County shall be liable only for the services rendered under this contract and accepted material received by the County before the effective date of termination.

**ARTICLE III - INDEMNIFICATION:** Contractor shall indemnify, defend, save and hold harmless the County of Gila and its officers, officials, agents, and employees (hereinafter referred to as "Indemnitee") from and against any and all claims, actions, liabilities, damages, losses, or expenses (including court costs, attorneys' fees, and costs of claim processing, investigation and litigation) (hereinafter referred to as "Claims") for bodily injury or personal injury (including death), or loss or damage to tangible or intangible property caused, or alleged to be caused, in whole or in part, by the negligent or willful acts or omissions of Contractor or any of its owners, officers, directors, agents, employees or subcontractors. This indemnity includes any claim or amount arising out of or recovered under the Workers' Compensation Law or arising out of the failure of such contractor to conform to any federal, state or local law, statute, ordinance, rule, regulation or court decree. It is the specific intention of the parties that the Indemnitee shall, in all instances, except for Claims arising solely from the negligent or willful acts or omissions of the Indemnitee, be indemnified by Contractor from and against any and all claims. It is agreed that Contractor will be responsible for primary loss investigation, defense and judgment costs where this indemnification is applicable. In consideration of the award of this contract, the Contractor agrees to waive all rights of subrogation against the County, its officers, officials, agents and employees for losses arising from the work performed by the Contractor for the County.

**ARTICLE IV – INSURANCE REQUIREMENTS:** Contractor and subcontractors shall procure and maintain until all of their obligations have been discharged, including any warranty periods under this Contract are satisfied, insurance against claims for injury to persons or damage to property which may arise from or in connection with the performance of the work hereunder by the Contractor, his agents, representatives, employees or subcontractors.

The insurance requirements herein are minimum requirements for this Contract and in no way limit the indemnity covenants contained in this Contract. The County in no way warrants that the minimum limits contained herein are sufficient to protect the Contractor from liabilities that might arise out of the performance of the work under this contract by the Contractor, his agents, representatives, employees or subcontractors and Contractor is free to purchase additional insurance as may be determined necessary.

A. **MINIMUM SCOPE AND LIMITS OF INSURANCE:** Contractor shall provide coverage with limits of liability not less than those stated below.

1. **Commercial General Liability – Occurrence Form**
   Policy shall include bodily injury, property damage and broad form contractual liability coverage.
   - General Aggregate $2,000,000
   - Products – Completed Operations Aggregate $1,000,000
   - Personal and Advertising Injury $1,000,000

- Each Occurrence $1,000,000

a. The policy shall be endorsed to include the following additional insured language: **"The County of Gila shall be named as an additional insured with respect to liability arising out of the activities performed by, or on behalf of the Contractor".**

2. **Worker's Compensation and Employers' Liability**

| | |
|---|---|
| Workers' Compensation | Statutory |
| Employers' Liability | |
| Each Accident | $100,000 |
| Disease – Each Employee | $100,000 |
| Disease – Policy Limit | $500,000 |

a. Policy shall contain a **waiver of subrogation** against the County of Gila.

3. **Professional Liability (Errors and Omissions Liability)**

| | |
|---|---|
| Each Claim | $1,000,000 |
| Annual Aggregate | $2,000,000 |

a. In the event that the professional liability insurance required by this Contract is written on a claims-made basis, Contractor warrants that any retroactive date under the policy shall precede the effective date of this Contract; and that either continuous coverage will be maintained or an extended discovery period will be exercised for a period of two (2) years beginning at the time work under this Contract is completed.

B. **ADDITIONAL INSURANCE REQUIREMENTS:** The policies shall include, or be endorsed to include, the following provisions:

1. On insurance policies where the County of Gila is named as an additional insured, the County of Gila shall be an additional insured to the full limits of liability purchased by the Contractor even if those limits of liability are in excess of those required by this Contract.
2 The Contractor's insurance coverage shall be primary insurance and non-contributory with respect to all other available sources.
3. Coverage provided by the Contractor shall not be limited to the liability assumed under the indemnification provisions of this Contract.

C. **NOTICE OF CANCELLATION:** Each insurance policy required by the insurance provisions of this Contract shall provide the required coverage and shall not be suspended, voided, canceled, reduced in coverage or endorsed to lower limits except after thirty (30) days prior written notice has been given to the County. Such notice shall be sent directly to **Gila County Purchasing Department, 1400 E. Ash St., Globe, AZ, 85501** and shall be sent by certified mail, return receipt requested.

D. **ACCEPTABILITY OF INSURERS:** Insurance is to be placed with insurers duly licensed or approved unlicensed companies in the state of Arizona and with an "A.M. Best" rating of not less than B+ VI. The County in no way warrants that the above-required minimum insurer rating is sufficient to protect the Contractor from potential insurer insolvency.

E. **VERIFICATION OF COVERAGE:** Contractor shall furnish the County with certificates of insurance (ACORD form or equivalent approved by the County) as required by this Contract. The certificates for each insurance policy are to be signed by a person authorized by that insurer to bind coverage on its behalf.

***All certificates and endorsements are to be received and approved by the County before work commences.*** Each insurance policy required by this Contract must be in effect at or prior to commencement of work under this Contract and remain in effect for the duration of the project. Failure to maintain the insurance policies as required by this Contract or to provide evidence of renewal is a material breach of contract.

All certificates required by this Contract shall be sent directly to **Gila County Purchasing Department, 1400 E. Ash St., Globe, AZ, 85501.** The County project/contract number and project description shall be noted on the certificate of insurance. The County reserves the right to require complete, certified copies of all insurance policies required by this Contract at any time.

F. **SUBCONTRACTORS:** Contractors' certificate(s) shall include all subcontractors as additional insured's under its policies or Contractor shall furnish to the County separate certificates and endorsements for each subcontractor. All coverage's for subcontractors shall be subject to the minimum requirements identified above.

G. **APPROVAL:** Any modification or variation from the insurance requirements in this Contract shall be made by the County Attorney, whose decision shall be final. Such action will not require a formal Contract amendment, but may be made by administrative action.

**ARTICLE V – LEGAL ARIZONA WORKERS ACT COMPLIANCE:** Contractor hereby warrants that it will at all times during the term of this Contract comply with all federal immigration laws applicable to Contractor's employment of its employees, and with the requirements of A.R.S. § 23-214 (A) (together the "State and Federal Immigration Laws"). Contractor shall further ensure that each subcontractor who performs any work for Contractor under this contract likewise complies with the State and Federal Immigration Laws. County shall have the right at any time to inspect the books and records of Contractor and any subcontractor in order to verify such party's compliance with the State and Federal Immigration Laws.

Any breach of Contractor's or any subcontractor's warranty of compliance with the State and Federal Immigration Laws, or of any other provision of this section, shall be deemed to be a material breach of this Contract subjecting Contractor to penalties up to and including suspension or termination of this Contract. If the breach is by a subcontractor, and the subcontract is suspended or terminated as a result, Contractor shall be required to take such steps as may be necessary to either self-perform the services that would have been provided under the subcontract or retain a replacement subcontractor, as soon as possible so as not to delay project completion.

Contractor shall advise each subcontractor of County's rights, and the subcontractor's obligations, under this Article by including a provision in each subcontract substantially in the following form: "Subcontractor hereby warrants that it will at all times during the term of this contract comply with all federal immigration laws applicable to Subcontractor's employees, and with the requirements of A.R.S. § 23-214 (A). Subcontractor further agrees that County may inspect the Subcontractor's books and records to insure that Subcontractor is in compliance with these requirements. Any breach of this paragraph by Subcontractor will be deemed to be a material breach of this contract subjecting Subcontractor to penalties up to and including suspension or termination of this contract."

Any additional costs attributable directly or indirectly to remedial action under this Article shall be the responsibility of Contractor. In the event that remedial action under this Article results in delay to one or more tasks on the critical path of Contractor's approved construction or critical milestones schedule, such

period of delay shall be deemed excusable delay for which Contractor shall be entitled to an extension of time, but not costs.

**ARTICLE VI – LAWS AND ORDINANCES:** This agreement shall be enforced under the laws of the State of Arizona. Contractor shall maintain in current status all Federal, State and Local licenses and permits required for the operation of the business conducted by the Contractor. The Contractor shall comply with the applicable provisions of the Americans with Disabilities Act (Public Law 101-336, 42 U.S.C. 12101-12213) and applicable federal regulations under the Act.

**ARTICLE VII– ANTI-TERRORISM WARRANTY:** Pursuant to A.R.S. §35-397 the Contractor certifies that it does not have scrutinized business operations in Iran or Sudan and that they are in compliance with the Export Administration Act and not on the Excluded Parties List.

**ARTICLE VIII – CANCELLATION:** This agreement is subject to cancellation pursuant to A.R.S. §38-511. If the Agreement is terminated, the county shall be liable only for payment for services rendered and accepted material received by the County before the effective date of termination.

**ARTICLE IX – RELATIONSHIP OF THE PARTIES:** Contractor is an independent contractor of the County. Contractor represents that he has or will secure, at his own expense, all personnel required in performing the services under this contract. Such personnel shall not be employees of or have any contractual relationship with the County. All personnel engaged in work under this contract shall be fully qualified and shall be authorized or permitted under State and local law to perform such services. Contractor warrants that he has obtained or will obtain Worker's Compensation Insurance for his employees working on this contract and that any subcontractors will likewise obtain Worker's Compensation Insurance for of their employees working on this contract. It is further agreed by Contractor that he shall obey all state and federal statutes, rules, and regulations which are applicable to provisions of the services called for herein. Neither Contractor nor any employee of the Contractor shall be deemed an officer, employee, or agent of the County.

**ARTICLE X – NON-APPROPRIATIONS CLAUSE:** Contractor acknowledges that the County is a governmental entity, and the contract validity is based upon the availability of public funding under its authority. In the event that public funds are unavailable and not appropriated for the performance of County's obligations under this contract, then this contract shall automatically expire without penalty to County after written notice to Contractor of the unavailability and non-appropriation of public funds. It is expressly agreed that the County shall only activate this non-appropriation provision as an emergency fiscal measure. The County shall not activate this non-appropriation provision for its convenience, to circumvent the requirements of this contract, or to enable the County to contract with another Contractor for the same supplies or services covered under this Addendum.

**ARTICLE XI – ENTIRE CONTRACT CLAUSE:** The Contractor and the County have read this Contract and agree to be bound by all of its terms, and further agree that it constitutes the entire contract between the two parties and may only be modified by a written mutual contract signed by the parties. No oral agreement or oral provision outside this Contract shall have any force or effect

**ARTICLE XII – NON-WAIVER OF ENFORCEABILITY:** Failure of the County to enforce, at any time, any of the provisions of this Contract, or to request at any time performance by Contractor of any of the provisions hereof, shall in no way be construed to be a waiver of such provisions, nor in any way affect the validity of this contract or any part thereof, or the right of the County to enforce each and every provision

**ARTICLE XIII – GOVERNING LAW:** Both parties agree that this Contract shall be governed by the laws of the state of Arizona. The parties further agree that the jurisdiction for any legal disputes arising out of this Contract shall be the Superior Court of the State of Arizona. The parties agree that even if this Contract does not specifically reference any provision required by state or federal law, those state and federally required provisions are incorporated into this Contract by this reference as though they were specifically listed herein.

**ARTICLE XIV– TERM:** Contract shall be effective date signed by the County Manager and expires February 15, 2012.

**ARTICLE XV – PAYMENT/BILLING:** Contractor shall be paid a flat fee of **$ 3,096.46** for completion of the project as outlined in the Scope of Services.

All invoices shall be submitted to Gila County Accounts Payable, 1400 E. Ash St, Globe, Arizona and include the following information:

- Purchase Order Number
- Contract Number
- Invoice Number
- Service Location
- Vendor Name and Address
- Description of Service

Any alterations to the scope of work resulting in a change in cost must have prior written approval by the County. Any unauthorized work may result in non-payment to the vendor.

Gila County employs a "Net 15" payment term for services meaning the payment will be issued fifteen (15) days from the date the County receives the invoice from the Contractor. Purchase orders sent to the Contractor reflect these terms and conditions.

The Contractor shall have a current I.R.S. W-9 form on file with the County unless not required by law. The County shall not remit payment if the Contractor does not have a current W-9.

**IN WITNESS WHEREOF,** two (2) identical counterparts of this contract, each which shall include original signatures and for all purposes be deemed an original thereof, have been duly executed by the parties hereinabove named, on the date and year first above written.

**GILA COUNTY**

**Don E. McDaniel Jr., County Manager**

**Date:** 12/14/11

Noble Building llc

~~**NOBLE CONSTRUCTION**~~

**Signature**

Jedidiah Byron Tamenhaus

**Print Name**

**Date:** 12-7-11

**APPROVED AS TO FORM**

**Bryan B. Chambers, Chief Deputy County Attorney**
**for Daisy Flores, County Attorney**

**Tommie C. Martin, District I**
P.O. Box 2297 Payson, AZ. 85547
(928) 474-2029

**Michael A. Pastor, District II**
1400 E. Ash St. Globe, AZ. 85501
(928) 425-3231 Ext. 8753

**Shirley L. Dawson, District III**
1400 E. Ash St. Globe, AZ. 85501
(928) 425-3231 Ext. 8511

**GILA COUNTY**
www.gilacountyaz.gov

**Don E. McDaniel Jr., County Manager**
Phone (928) 425-3231 Ext.8761

**Joseph T. Heatherly, Finance Director**
Phone (928) 425-3231 Ext. 8743

FAX (928) 425-0319
TTY: 7-1-1

**SERVICE AGREEMENT NO. 112011**

**WEATHERIZATION PROJECT NO. HH#8091**

**THIS AGREEMENT,** made and entered into this 14th day of December, **2011**, by and between the Gila County Board of Supervisors, a political subdivision of the State of Arizona, hereinafter designated the County, and Noble Building LLC, of the City of Payson, State of Arizona, hereinafter designated the Contractor.

**WITNESSETH:** The Contractor, for and in consideration of the sum to be paid him by the County, in the manner and at the time hereinafter provided, and of the other covenants and agreement's herein contained, hereby agrees, for himself, his heirs, administrators, successors, and assigns as follows:

**ARTICLE I – SCOPE OF SERVICES:** The Contractor shall provide for the complete provision in the scope of work below of Weatherization Project HH#8091 in a good and workmanlike and substantial manner and to the satisfaction of the County under the direction of the Housing Services Manager or designee.

All work performed by the Contractor shall be completed to local codes and regulations per Gila County and the State of Arizona and consistent with all Weatherization guidelines.

Contractor shall:

| Work Description | *Fee |
|---|---|
| 1. Infiltration | $ 1,440.00 |
| 2. Blow in an R-28 in entire attic | $ 813.60 |
| 3. Patch roof | $ 227.50 |
| 4. Remove existing pellet stove | $ 240.00 |
| 5. Install new vent on existing water heater and extend T&P to daylight | $ 360.00 |
| 6. Install sun screens, 1 on west wall and 2 on the south wall (3 total) screen material to be 80% UV or better | $ 180.00 |
| | |

| | |
|---|---|
| 7. Remove abandoned flue pipe and patch affected areas | $ 360.00 |
| 8. Install new high efficiency 13 SEER heat pump with matching air handler and auxiliary heat element sized properly for the home. New unit to include manual J calculations. To include new thermostat, new duct system and all electrical connections. | $ 6,840.00 |
| | |
| Sub-Total | $ 10,461.10 |
| Taxes | $ 661.14 |
| Grand Total | $ 11,122.24 |

**ARTICLE II – TERMINATION:** The County reserves the right to terminate the Contract, in whole or in part at any time, when in the best interest of the County, without penalty or recourse. Upon receipt of the written notice, the Contractor shall stop all work as directed in the notice. If the contract is terminated, the County shall be liable only for the services rendered under this contract and accepted material received by the County before the effective date of termination.

**ARTICLE III - INDEMNIFICATION:** Contractor shall indemnify, defend, save and hold harmless the County of Gila and its officers, officials, agents, and employees (hereinafter referred to as "Indemnitee") from and against any and all claims, actions, liabilities, damages, losses, or expenses (including court costs, attorneys' fees, and costs of claim processing, investigation and litigation) (hereinafter referred to as "Claims") for bodily injury or personal injury (including death), or loss or damage to tangible or intangible property caused, or alleged to be caused, in whole or in part, by the negligent or willful acts or omissions of Contractor or any of its owners, officers, directors, agents, employees or subcontractors. This indemnity includes any claim or amount arising out of or recovered under the Workers' Compensation Law or arising out of the failure of such contractor to conform to any federal, state or local law, statute, ordinance, rule, regulation or court decree. It is the specific intention of the parties that the Indemnitee shall, in all instances, except for Claims arising solely from the negligent or willful acts or omissions of the Indemnitee, be indemnified by Contractor from and against any and all claims. It is agreed that Contractor will be responsible for primary loss investigation, defense and judgment costs where this indemnification is applicable. In consideration of the award of this contract, the Contractor agrees to waive all rights of subrogation against the County, its officers, officials, agents and employees for losses arising from the work performed by the Contractor for the County.

**ARTICLE IV – INSURANCE REQUIREMENTS:** Contractor and subcontractors shall procure and maintain until all of their obligations have been discharged, including any warranty periods under this Contract are satisfied, insurance against claims for injury to persons or damage to property which may arise from or in connection with the performance of the work hereunder by the Contractor, his agents, representatives, employees or subcontractors.

The insurance requirements herein are minimum requirements for this Contract and in no way limit the indemnity covenants contained in this Contract. The County in no way warrants that the minimum limits contained herein are sufficient to protect the Contractor from liabilities that might arise out of the performance of the work under this contract by the Contractor, his agents, representatives, employees or subcontractors and Contractor is free to purchase additional insurance as may be determined necessary.

A. **MINIMUM SCOPE AND LIMITS OF INSURANCE:** Contractor shall provide coverage with limits of liability not less than those stated below.

1. **Commercial General Liability – Occurrence Form**
   Policy shall include bodily injury, property damage and broad form contractual liability coverage.
   - General Aggregate $2,000,000
   - Products – Completed Operations Aggregate $1,000,000
   - Personal and Advertising Injury $1,000,000
   - Each Occurrence $1,000,000

   a. The policy shall be endorsed to include the following additional insured language: **"The County of Gila shall be named as an additional insured with respect to liability arising out of the activities performed by, or on behalf of the Contractor".**

2. **Worker's Compensation and Employers' Liability**

| | |
|---|---|
| Workers' Compensation | Statutory |
| Employers' Liability | |
| Each Accident | $100,000 |
| Disease – Each Employee | $100,000 |
| Disease – Policy Limit | $500,000 |

   a. Policy shall contain a **waiver of subrogation** against the County of Gila.

3. **Professional Liability (Errors and Omissions Liability)**

| | |
|---|---|
| Each Claim | $1,000,000 |
| Annual Aggregate | $2,000,000 |

   a. In the event that the professional liability insurance required by this Contract is written on a claims-made basis, Contractor warrants that any retroactive date under the policy shall precede the effective date of this Contract; and that either continuous coverage will be maintained or an extended discovery period will be exercised for a period of two (2) years beginning at the time work under this Contract is completed.

B. **ADDITIONAL INSURANCE REQUIREMENTS:** The policies shall include, or be endorsed to include, the following provisions:

1. On insurance policies where the County of Gila is named as an additional insured, the County of Gila shall be an additional insured to the full limits of liability purchased by the Contractor even if those limits of liability are in excess of those required by this Contract.
2 The Contractor's insurance coverage shall be primary insurance and non-contributory with respect to all other available sources.
3. Coverage provided by the Contractor shall not be limited to the liability assumed under the indemnification provisions of this Contract.

C. **NOTICE OF CANCELLATION:** Each insurance policy required by the insurance provisions of this Contract shall provide the required coverage and shall not be suspended, voided, canceled, reduced in coverage or endorsed to lower limits except after thirty (30) days prior written notice has been given to the County. Such notice shall be sent directly to **Gila County Purchasing Department, 1400 E. Ash St., Globe, AZ, 85501** and shall be sent by certified mail, return receipt requested.

D. **ACCEPTABILITY OF INSURERS:** Insurance is to be placed with insurers duly licensed or approved unlicensed companies in the state of Arizona and with an "A.M. Best" rating of not less than B+ VI. The County in no way warrants that the above-required minimum insurer rating is sufficient to protect the Contractor from potential insurer insolvency.

E. **VERIFICATION OF COVERAGE:** Contractor shall furnish the County with certificates of insurance (ACORD form or equivalent approved by the County) as required by this Contract. The certificates for each insurance policy are to be signed by a person authorized by that insurer to bind coverage on its behalf.

***All certificates and endorsements are to be received and approved by the County before work commences.*** Each insurance policy required by this Contract must be in effect at or prior to commencement of work under this Contract and remain in effect for the duration of the project. Failure to maintain the insurance policies as required by this Contract or to provide evidence of renewal is a material breach of contract. All certificates required by this Contract shall be sent directly to **Gila County Purchasing Department, 1400 E. Ash St., Globe, AZ, 85501.** The County project/contract number and project description shall be noted on the certificate of insurance. The County reserves the right to require complete, certified copies of all insurance policies required by this Contract at any time.

F. **SUBCONTRACTORS:** Contractors' certificate(s) shall include all subcontractors as additional insured's under its policies or Contractor shall furnish to the County separate certificates and endorsements for each subcontractor. All coverage's for subcontractors shall be subject to the minimum requirements identified above.

G. **APPROVAL:** Any modification or variation from the insurance requirements in this Contract shall be made by the County Attorney, whose decision shall be final. Such action will not require a formal Contract amendment, but may be made by administrative action.

**ARTICLE V – LEGAL ARIZONA WORKERS ACT COMPLIANCE:** Contractor hereby warrants that it will at all times during the term of this Contract comply with all federal immigration laws applicable to Contractor's employment of its employees, and with the requirements of A.R.S. § 23-214 (A) (together the "State and Federal Immigration Laws"). Contractor shall further ensure that each subcontractor who performs any work for Contractor under this contract likewise complies with the State and Federal Immigration Laws. County shall have the right at any time to inspect the books and records of Contractor and any subcontractor in order to verify such party's compliance with the State and Federal Immigration Laws.

Any breach of Contractor's or any subcontractor's warranty of compliance with the State and Federal Immigration Laws, or of any other provision of this section, shall be deemed to be a material breach of this Contract subjecting Contractor to penalties up to and including suspension or termination of this Contract. If the breach is by a subcontractor, and the subcontract is suspended or terminated as a result, Contractor shall be required to take such steps as may be necessary to either self-perform the services that would have been provided under the subcontract or retain a replacement subcontractor as soon as possible so as not to delay project completion.

Contractor shall advise each subcontractor of County's rights, and the subcontractor's obligations, under this Article by including a provision in each subcontract substantially in the following form: "Subcontractor hereby warrants that it will at all times during the term of this contract comply with all

federal immigration laws applicable to Subcontractor's employees, and with the requirements of A.R.S. § 23-214 (A). Subcontractor further agrees that County may inspect the Subcontractor's books and records to insure that Subcontractor is in compliance with these requirements. Any breach of this paragraph by Subcontractor will be deemed to be a material breach of this contract subjecting Subcontractor to penalties up to and including suspension or termination of this contract."

Any additional costs attributable directly or indirectly to remedial action under this Article shall be the responsibility of Contractor. In the event that remedial action under this Article results in delay to one or more tasks on the critical path of Contractor's approved construction or critical milestones schedule, such period of delay shall be deemed excusable delay for which Contractor shall be entitled to an extension of time, but not costs.

**ARTICLE VI – LAWS AND ORDINANCES:** This agreement shall be enforced under the laws of the State of Arizona. Contractor shall maintain in current status all Federal, State and Local licenses and permits required for the operation of the business conducted by the Contractor. The Contractor shall comply with the applicable provisions of the Americans with Disabilities Act (Public Law 101-336, 42 U.S.C. 12101-12213) and applicable federal regulations under the Act.

**ARTICLE VII– ANTI-TERRORISM WARRANTY:** Pursuant to A.R.S. §35-397 the Contractor certifies that it does not have scrutinized business operations in Iran or Sudan and that they are in compliance with the Export Administration Act and not on the Excluded Parties List.

**ARTICLE VIII – CANCELLATION:** This agreement is subject to cancellation pursuant to A.R.S. §38-511. If the Agreement is terminated, the county shall be liable only for payment for services rendered and accepted material received by the County before the effective date of termination.

**ARTICLE IX – RELATIONSHIP OF THE PARTIES:** Contractor is an independent contractor of the County. Contractor represents that he has or will secure, at his own expense, all personnel required in performing the services under this contract. Such personnel shall not be employees of or have any contractual relationship with the County. All personnel engaged in work under this contract shall be fully qualified and shall be authorized or permitted under State and local law to perform such services. Contractor warrants that he has obtained or will obtain Worker's Compensation Insurance for his employees working on this contract and that any subcontractors will likewise obtain Worker's Compensation Insurance for of their employees working on this contract. It is further agreed by Contractor that he shall obey all state and federal statutes, rules, and regulations which are applicable to provisions of the services called for herein. Neither Contractor nor any employee of the Contractor shall be deemed an officer, employee, or agent of the County.

**ARTICLE X – NON-APPROPRIATIONS CLAUSE:** Contractor acknowledges that the County is a governmental entity, and the contract validity is based upon the availability of public funding under its authority. In the event that public funds are unavailable and not appropriated for the performance of County's obligations under this contract, then this contract shall automatically expire without penalty to County after written notice to Contractor of the unavailability and non-appropriation of public funds. It is expressly agreed that the County shall only activate this non-appropriation provision as an emergency fiscal measure. The County shall not activate this non-appropriation provision for its convenience, to

circumvent the requirements of this contract, or to enable the County to contract with another Contractor for the same supplies or services covered under this Addendum.

**ARTICLE XI – ENTIRE CONTRACT CLAUSE:** The Contractor and the County have read this Contract and agree to be bound by all of its terms, and further agree that it constitutes the entire contract between the two parties and may only be modified by a written mutual contract signed by the parties. No oral agreement or oral provision outside this Contract shall have any force or effect

**ARTICLE XII – NON-WAIVER OF ENFORCEABILITY:** Failure of the County to enforce, at any time, any of the provisions of this Contract, or to request at any time performance by Contractor of any of the provisions hereof, shall in no way be construed to be a waiver of such provisions, nor in any way affect the validity of this contract or any part thereof, or the right of the County to enforce each and every provision

**ARTICLE XIII – GOVERNING LAW:** Both parties agree that this Contract shall be governed by the laws of the state of Arizona. The parties further agree that the jurisdiction for any legal disputes arising out of this Contract shall be the Superior Court of the State of Arizona. The parties agree that even if this Contract does not specifically reference any provision required by state or federal law, those state and federally required provisions are incorporated into this Contract by this reference as though they were specifically listed herein.

**ARTICLE XIV– TERM:** Contract shall be effective date signed by the County Manager and expires February 15, 2012.

**ARTICLE XV – PAYMENT/BILLING:** Contractor shall be paid a flat fee of **$ 11,122.24** for completion of the project as outlined in the Scope of Services.

All invoices shall be submitted to Gila County Accounts Payable, 1400 E. Ash St, Globe, Arizona and include the following information:

- Purchase Order Number
- Contract Number
- Invoice Number
- Service Location
- Vendor Name and Address
- Description of Service

Any alterations to the scope of work resulting in a change in cost must have prior written approval by the County. Any unauthorized work may result in non-payment to the vendor.

Gila County employs a "Net 15" payment term for services meaning the payment will be issued fifteen (15) days from the date the County receives the invoice from the Contractor. Purchase orders sent to the Contractor reflect these terms and conditions.

The Contractor shall have a current I.R.S. W-9 form on file with the County unless not required by law. The County shall not remit payment if the Contractor does not have a current W-9.

**IN WITNESS WHEREOF,** two (2) identical counterparts of this contract, each which shall include original signatures and for all purposes be deemed an original thereof, have been duly executed by the parties hereinabove named, on the date and year first above written.

**GILA COUNTY**

**Don E. McDaniel Jr., County Manager**

**Date:** 12/14/11

Noble Building llc

~~**NOBLE CONSTRUCTION**~~

**Signature**

Jedidiah Byron Tanenhaus

**Print Name**

**Date:** 12-7-11

**APPROVED AS TO FORM**

**Bryan B. Chambers, Chief Deputy County Attorney**
**for Daisy Flores, County Attorney**

**Tommie C. Martin, District I**
P.O. Box 2297 Payson, AZ. 85547
(928) 474-2029

**Michael A. Pastor, District II**
1400 E. Ash St. Globe, AZ. 85501
(928) 425-3231 Ext. 8753

**Shirley L. Dawson, District III**
1400 E. Ash St. Globe, AZ. 85501
(928) 425-3231 Ext. 8511

**GILA COUNTY**
www.gilacountyaz.gov

**Don E. McDaniel Jr., County Manager**
Phone (928) 425-3231 Ext.8761

**Joseph T. Heatherly, Finance Director**
Phone (928) 425-3231 Ext. 8743

FAX (928) 425-0319
TTY: 7-1-1

**SERVICE AGREEMENT NO. 121111**

**WEATHERIZATION PROJECT NO. HH#8409**

**THIS AGREEMENT,** made and entered into this 13th day of December, **2011**, by and between the Gila County Board of Supervisors, a political subdivision of the State of Arizona, hereinafter designated the County, and Mountain Retreat Builders, LLC, of the City of Globe, State of Arizona, hereinafter designated the Contractor.

**WITNESSETH:** The Contractor, for and in consideration of the sum to be paid him by the County, in the manner and at the time hereinafter provided, and of the other covenants and agreement's herein contained, hereby agrees, for himself, his heirs, administrators, successors, and assigns as follows:

**ARTICLE 1 – SCOPE OF SERVICES:** The Contractor shall provide for the complete provision in the scope of work below of Weatherization Project HH#8409 in a good and workmanlike and substantial manner and to the satisfaction of the County under the direction of the Housing Services Manager or designee.

All work performed by the Contractor shall be completed to local codes and regulation per Gila County and the State of Arizona and consistent with all Weatherization guidelines.

Scope of Work: Refer to Exhibit "A" made a binding part of this agreement as set forth herein.

Contractor Fee's: Refer to Exhibit "A"

**ARTICLE 2 – TERMINATION:** The County reserves the right to terminate the Contract, in whole or in part at any time, when in the best interest of the County, without penalty or recourse. Upon receipt of the written notice, the Contractor shall stop all work as directed in the notice. If the contract is terminated, the County shall be liable only for the services rendered under this contract and accepted material received by the County before the effective date of termination.

**ARTICLE 3 - INDEMNIFICATION:** Contractor shall indemnify, defend, save and hold harmless the County of Gila and its officers, officials, agents, and employees (hereinafter referred to as "Indemnitee") from and against any and all claims, actions, liabilities, damages, losses, or expenses (including court costs,

attorneys' fees, and costs of claim processing, investigation and litigation) (hereinafter referred to as "Claims") for bodily injury or personal injury (including death), or loss or damage to tangible or intangible property caused, or alleged to be caused, in whole or in part, by the negligent or willful acts or omissions of Contractor or any of its owners, officers, directors, agents, employees or subcontractors. This indemnity includes any claim or amount arising out of or recovered under the Workers' Compensation Law or arising out of the failure of such contractor to conform to any federal, state or local law, statute, ordinance, rule, regulation or court decree. It is the specific intention of the parties that the Indemnitee shall, in all instances, except for Claims arising solely from the negligent or willful acts or omissions of the Indemnitee, be indemnified by Contractor from and against any and all claims. It is agreed that Contractor will be responsible for primary loss investigation, defense and judgment costs where this indemnification is applicable. In consideration of the award of this contract, the Contractor agrees to waive all rights of subrogation against the County, its officers, officials, agents and employees for losses arising from the work performed by the Contractor for the County.

**ARTICLE 4 – INSURANCE REQUIREMENTS:** Contractor and subcontractors shall procure and maintain until all of their obligations have been discharged, including any warranty periods under this Contract are satisfied, insurance against claims for injury to persons or damage to property which may arise from or in connection with the performance of the work hereunder by the Contractor, his agents, representatives, employees or subcontractors.

The insurance requirements herein are minimum requirements for this Contract and in no way limit the indemnity covenants contained in this Contract. The County in no way warrants that the minimum limits contained herein are sufficient to protect the Contractor from liabilities that might arise out of the performance of the work under this contract by the Contractor, his agents, representatives, employees or subcontractors and Contractor is free to purchase additional insurance as may be determined necessary.

A. **MINIMUM SCOPE AND LIMITS OF INSURANCE:** Contractor shall provide coverage with limits of liability not less than those stated below.

1. **Commercial General Liability – Occurrence Form**
   Policy shall include bodily injury, property damage and broad form contractual liability coverage.
   - General Aggregate $2,000,000
   - Products – Completed Operations Aggregate $1,000,000
   - Personal and Advertising Injury $1,000,000
   - Each Occurrence $1,000,000

   a. The policy shall be endorsed to include the following additional insured language: **"The County of Gila shall be named as an additional insured with respect to liability arising out of the activities performed by, or on behalf of the Contractor".**

2. **Worker's Compensation and Employers' Liability**

| | |
|---|---|
| Workers' Compensation | Statutory |
| Employers' Liability | |
| Each Accident | $100,000 |
| Disease – Each Employee | $100,000 |
| Disease – Policy Limit | $500,000 |

   a. Policy shall contain a **waiver of subrogation** against the County of Gila.

3. **Professional Liability (Errors and Omissions Liability)**

| | |
|---|---|
| Each Claim | $1,000,000 |
| Annual Aggregate | $2,000,000 |

a. In the event that the professional liability insurance required by this Contract is written on a claims-made basis, Contractor warrants that any retroactive date under the policy shall precede the effective date of this Contract; and that either continuous coverage will be maintained or an extended discovery period will be exercised for a period of two (2) years beginning at the time work under this Contract is completed.

B. **ADDITIONAL INSURANCE REQUIREMENTS:** The policies shall include, or be endorsed to include, the following provisions:

1. On insurance policies where the County of Gila is named as an additional insured, the County of Gila shall be an additional insured to the full limits of liability purchased by the Contractor even if those limits of liability are in excess of those required by this Contract.
2 The Contractor's insurance coverage shall be primary insurance and non-contributory with respect to all other available sources.
3. Coverage provided by the Contractor shall not be limited to the liability assumed under the indemnification provisions of this Contract.

C. **NOTICE OF CANCELLATION:** Each insurance policy required by the insurance provisions of this Contract shall provide the required coverage and shall not be suspended, voided, canceled, reduced in coverage or endorsed to lower limits except after thirty (30) days prior written notice has been given to the County. Such notice shall be sent directly to **Gila County Purchasing Department, 1400 E. Ash St., Globe, AZ, 85501** and shall be sent by certified mail, return receipt requested.

D. **ACCEPTABILITY OF INSURERS:** Insurance is to be placed with insurers duly licensed or approved unlicensed companies in the state of Arizona and with an "A.M. Best" rating of not less than B+ VI. The County in no way warrants that the above-required minimum insurer rating is sufficient to protect the Contractor from potential insurer insolvency.

E. **VERIFICATION OF COVERAGE:** Contractor shall furnish the County with certificates of insurance (ACORD form or equivalent approved by the County) as required by this Contract. The certificates for each insurance policy are to be signed by a person authorized by that insurer to bind coverage on its behalf.

***All certificates and endorsements are to be received and approved by the County before work commences.*** Each insurance policy required by this Contract must be in effect at or prior to commencement of work under this Contract and remain in effect for the duration of the project. Failure to maintain the insurance policies as required by this Contract or to provide evidence of renewal is a material breach of contract.

All certificates required by this Contract shall be sent directly to **Gila County Purchasing Department, 1400 E. Ash St., Globe, AZ, 85501.** The County project/contract number and project description shall be noted on the certificate of insurance. The County reserves the right to require complete, certified copies of all insurance policies required by this Contract at any time.

F. **SUBCONTRACTORS:** Contractors' certificate(s) shall include all subcontractors as additional insured's under its policies or Contractor shall furnish to the County separate certificates and endorsements for each subcontractor. All coverage's for subcontractors shall be subject to the minimum requirements identified above.

G. **APPROVAL:** Any modification or variation from the insurance requirements in this Contract shall be made by the County Attorney, whose decision shall be final. Such action will not require a formal Contract amendment, but may be made by administrative action.

**ARTICLE 5 – LEGAL ARIZONA WORKERS ACT COMPLIANCE:** Contractor hereby warrants that it will at all times during the term of this Contract comply with all federal immigration laws applicable to Contractor's employment of its employees, and with the requirements of A.R.S. § 23-214 (A) (together the "State and Federal Immigration Laws"). Contractor shall further ensure that each subcontractor who performs any work for Contractor under this contract likewise complies with the State and Federal Immigration Laws. County shall have the right at any time to inspect the books and records of Contractor and any subcontractor in order to verify such party's compliance with the State and Federal Immigration Laws.

Any breach of Contractor's or any subcontractor's warranty of compliance with the State and Federal Immigration Laws, or of any other provision of this section, shall be deemed to be a material breach of this Contract subjecting Contractor to penalties up to and including suspension or termination of this Contract. If the breach is by a subcontractor, and the subcontract is suspended or terminated as a result, Contractor shall be required to take such steps as may be necessary to either self-perform the services that would have been provided under the subcontract or retain a replacement subcontractor as soon as possible so as not to delay project completion.

Contractor shall advise each subcontractor of County's rights, and the subcontractor's obligations, under this Article by including a provision in each subcontract substantially in the following form: "Subcontractor hereby warrants that it will at all times during the term of this contract comply with all federal immigration laws applicable to Subcontractor's employees, and with the requirements of A.R.S. § 23-214 (A). Subcontractor further agrees that County may inspect the Subcontractor's books and records to insure that Subcontractor is in compliance with these requirements. Any breach of this paragraph by Subcontractor will be deemed to be a material breach of this contract subjecting Subcontractor to penalties up to and including suspension or termination of this contract."

Any additional costs attributable directly or indirectly to remedial action under this Article shall be the responsibility of Contractor. In the event that remedial action under this Article results in delay to one or more tasks on the critical path of Contractor's approved construction or critical milestones schedule, such period of delay shall be deemed excusable delay for which Contractor shall be entitled to an extension of time, but not costs.

**ARTICLE 6 – LAWS AND ORDINANCES:** This agreement shall be enforced under the laws of the State of Arizona. Contractor shall maintain in current status all Federal, State and Local licenses and permits required for the operation of the business conducted by the Contractor. The Contractor shall comply with the applicable provisions of the Americans with Disabilities Act (Public Law 101-336, 42 U.S.C. 12101-12213) and applicable federal regulations under the Act.

**ARTICLE 7– ANTI-TERRORISM WARRANTY:** Pursuant to A.R.S. § 35-393.06(B) and 35-301.06(A) the Contractor certifies that it does not have scrutinized business operations in Iran or Sudan and that they are in compliance with the Export Administration Act and not on the Excluded Parties List.

**ARTICLE 8 – CANCELLATION:** This agreement is subject to cancellation pursuant to A.R.S. §38-511. If the Agreement is terminated, the county shall be liable only for payment for services rendered and accepted material received by the County before the effective date of termination.

**ARTICLE 9 – RELATIONSHIP OF THE PARTIES:** Contractor is an independent contractor of the County. Contractor represents that he has or will secure, at his own expense, all personnel required in performing the services under this contract. Such personnel shall not be employees of or have any contractual relationship with the County. All personnel engaged in work under this contract shall be fully qualified and shall be authorized or permitted under State and local law to perform such services. Contractor warrants that he has obtained or will obtain Worker's Compensation Insurance for his employees working on this contract and that any subcontractors will likewise obtain Worker's Compensation Insurance for of their employees working on this contract. It is further agreed by Contractor that he shall obey all state and federal statutes, rules, and regulations which are applicable to provisions of the services called for herein. Neither Contractor nor any employee of the Contractor shall be deemed an officer, employee, or agent of the County.

**ARTICLE 10 – NON-APPROPRIATIONS CLAUSE:** Contractor acknowledges that the County is a governmental entity, and the contract validity is based upon the availability of public funding under its authority. In the event that public funds are unavailable and not appropriated for the performance of County's obligations under this contract, then this contract shall automatically expire without penalty to County after written notice to Contractor of the unavailability and non-appropriation of public funds. It is expressly agreed that the County shall only activate this non-appropriation provision as an emergency fiscal measure. The County shall not activate this non-appropriation provision for its convenience, to circumvent the requirements of this contract, or to enable the County to contract with another Contractor for the same supplies or services covered under this Addendum.

**ARTICLE 11 – ENTIRE CONTRACT CLAUSE:** The Contractor and the County have read this Contract and agree to be bound by all of its terms, and further agree that it constitutes the entire contract between the two parties and may only be modified by a written mutual contract signed by the parties. No oral agreement or oral provision outside this Contract shall have any force or effect

**ARTICLE 12 – NON-WAIVER OF ENFORCEABILITY:** Failure of the County to enforce, at any time, any of the provisions of this Contract, or to request at any time performance by Contractor of any of the provisions hereof, shall in no way be construed to be a waiver of such provisions, nor in any way affect the validity of this contract or any part thereof, or the right of the County to enforce each and every provision

**ARTICLE 13 – GOVERNING LAW:** Both parties agree that this Contract shall be governed by the laws of the state of Arizona. The parties further agree that the jurisdiction for any legal disputes arising out of this Contract shall be the Superior Court of the State of Arizona. The parties agree that even if this Contract does not specifically reference any provision required by state or federal law, those state and federally required provisions are incorporated into this Contract by this reference as though they were specifically listed herein.

**ARTICLE 14– TERM:** Contract shall be effective date signed by the County Manager and expires March 31, 2012.

**ARTICLE 15 – PAYMENT/BILLING:** Contractor shall be paid a flat fee of **$ 10,072.24** for completion of the project as outlined in the Scope of Services.

All invoices shall be submitted to Gila County Accounts Payable, 1400 E. Ash St, Globe, Arizona and include the following information:

- Purchase Order Number
- Contract Number
- Invoice Number
- Service Location
- Vendor Name and Address
- Description of Service

Any alterations to the scope of work resulting in a change in cost must have prior written approval by the County. Any unauthorized work may result in non-payment to the vendor.

Gila County employs a "Net 15" payment term for services meaning the payment will be issued fifteen (15) days from the date the County receives the invoice from the Contractor. Purchase orders sent to the Contractor reflect these terms and conditions.

The Contractor shall have a current I.R.S. W-9 form on file with the County unless not required by law. The County shall not remit payment if the Contractor does not have a current W-9.

**IN WITNESS WHEREOF,** two (2) identical counterparts of **Contract No. 121111**, each which shall include original signatures and for all purposes be deemed an original thereof, have been duly executed by the parties hereinabove named, on the date and year first above written.

**GILA COUNTY**

**Don E. McDaniel Jr., County Manager**

**Date:** 12/12/11

**MOUNTAIN RETREAT BUILDERS, LLC**

**Signature**

**Print Name**

**Date:** _____

**APPROVED AS TO FORM**

**Bryan B. Chambers, Chief Deputy County Attorney**
**for Daisy Flores, County Attorney**

EXHIBIT "A"

**Mountain Retreat Builders, LLC.**
*ROC #170186*

# ESTIMATE

745 E. Senita Dr.
Globe AZ 85502
Phone 928-606-4674

DATE:NOVEMBER 21,2011

**TO:**
Gila County Community Services Division
Weatherization Program
5515 S. Apache Ave. Suite #200
Globe, AZ 85501
928-425-7631

**FOR: HH# 8409**

Globe, AZ. 85501

| | DESCRIPTION | | AMOUNT |
|---|---|---|---|
| 1 | New - 60,000 Btu 90% plus natural gas furnace<br>- Complete ducting system with six supply registers and one return register<br>- R-8 flexible ducting<br>- Walkway and service platform for furnace with disconnect and light<br>- Gas from existing<br>- Electric from existing<br>- Thermostat<br>- Vent system and condensate | | $5,250.00 |
| | Infiltration to be lowered to goal of 3000 cfm's | | $1,200.00 |
| | Add Sun Screens and 3 new panes of glass | | $400.00 |
| | Relocate Water Heater in Laundry(county supplied) to meet all codes and venting | | $1,090.00 |
| | Service Cooler , add stand and cover | | $275.00 |
| | Insulate attic to R-30 | | $975.00 |
| | Monitor project to insure targeted energy savings reductions achieved. | | |
| | Call and set up test out to verify the job is completed as contracted. | | |
| | Tax 9.6% | | $882.24 |
| | Total | | $10,072.24 |
| | | TOTAL | $ 10,072.24 |

**Tommie C. Martin, District I**
P.O. Box 2297 Payson, AZ. 85547
(928) 474-2029

**Michael A. Pastor, District II**
1400 E. Ash St. Globe, AZ. 85501
(928) 425-3231 Ext. 8753

**Shirley L. Dawson, District III**
1400 E. Ash St. Globe, AZ. 85501
(928) 425-3231 Ext. 8511

**GILA COUNTY**
www.gilacountyaz.gov

**Don E. McDaniel Jr., County Manager**
Phone (928) 425-3231 Ext.8761

**Joseph T. Heatherly, Finance Director**
Phone (928) 425-3231 Ext. 8743

FAX (928) 425-0319
TTY: 7-1-1

**SERVICE AGREEMENT NO. 120811**
**DECOMMISSIONING OF ABANDONED WELL**

**THIS AGREEMENT,** made and entered into this 21st day of December, **2011**, by and between the Gila County Board of Supervisors, a political subdivision of the State of Arizona, hereinafter designated the County, and Excel Pump and Well Service, of the City of Globe, State of Arizona, hereinafter designated the Contractor.

**WITNESSETH:** The Contractor, for and in consideration of the sum to be paid him by the County, in the manner and at the time hereinafter provided, and of the other covenants and agreement's herein contained, hereby agrees, for himself, his heirs, administrators, successors, and assigns as follows:

**ARTICLE I – SCOPE OF SERVICES:** The Contractor shall provide for the complete provision in the scope of work below of the decommissioning of a 40 foot abandoned well at 188 Shady Lane in Tonto Basin, Arizona, in a good and workmanlike and substantial manner and to the satisfaction of the County under the direction of the Gila County Emergency Management Department or designee.

Contractor shall be an ADWQ qualified well driller for the decommissioning of the well.

Contractor shall perform one (1) water well abandonment activity to include:

- Complete NOI paperwork application (fee $150.00)
- Receive permit
- Mobilize drill or needed equipment
- Site preparation will include GPS tagging of well site
- Pull pump and casing (Property has been blue staked-power is off)
- Grout with required material per ADWQ specifications according to Arizona Department of Water Resources (ADWR) Well Abandonment Handbook, September 2008.
- Provide photo document
- Clean work site to original condition
- Complete final paperwork with ADWR
- Submit all final paperwork to Gila County

Contractor Fee Schedule: (taxes included)

| Item | Description | Units | Number of Units | Unit Price | Total Price |
|---|---|---|---|---|---|
| 1 | Neat Cement Grout | cuft | 14.3 | $15.00 | $214.50 |

| | | | | | |
|---|---|---|---|---|---|
| 2 | High Solids Bentonite Grout | cuft | 7.8 | $7.00 | $54.60 |
| 3 | Labor | Hr | 12 | $175.00 | $2,100.00 |
| | | | | **Total Cost** | **$2,369.10** |

**ARTICLE II – TERMINATION:** The County reserves the right to terminate the Contract, in whole or in part at any time, when in the best interest of the County, without penalty or recourse. Upon receipt of the written notice, the Contractor shall stop all work as directed in the notice. If the contract is terminated, the County shall be liable only for the services rendered under this contract and accepted material received by the County before the effective date of termination.

**ARTICLE III - INDEMNIFICATION:** Contractor shall indemnify, defend, save and hold harmless the County of Gila and its officers, officials, agents, and employees (hereinafter referred to as "Indemnitee") from and against any and all claims, actions, liabilities, damages, losses, or expenses (including court costs, attorneys' fees, and costs of claim processing, investigation and litigation) (hereinafter referred to as "Claims") for bodily injury or personal injury (including death), or loss or damage to tangible or intangible property caused, or alleged to be caused, in whole or in part, by the negligent or willful acts or omissions of Contractor or any of its owners, officers, directors, agents, employees or subcontractors. This indemnity includes any claim or amount arising out of or recovered under the Workers' Compensation Law or arising out of the failure of such contractor to conform to any federal, state or local law, statute, ordinance, rule, regulation or court decree. It is the specific intention of the parties that the Indemnitee shall, in all instances, except for Claims arising solely from the negligent or willful acts or omissions of the Indemnitee, be indemnified by Contractor from and against any and all claims. It is agreed that Contractor will be responsible for primary loss investigation, defense and judgment costs where this indemnification is applicable. In consideration of the award of this contract, the Contractor agrees to waive all rights of subrogation against the County, its officers, officials, agents and employees for losses arising from the work performed by the Contractor for the County.

**ARTICLE IV – INSURANCE REQUIREMENTS:** Contractor and subcontractors shall procure and maintain until all of their obligations have been discharged, including any warranty periods under this Contract are satisfied, insurance against claims for injury to persons or damage to property which may arise from or in connection with the performance of the work hereunder by the Contractor, his agents, representatives, employees or subcontractors.

The insurance requirements herein are minimum requirements for this Contract and in no way limit the indemnity covenants contained in this Contract. The County in no way warrants that the minimum limits contained herein are sufficient to protect the Contractor from liabilities that might arise out of the performance of the work under this contract by the Contractor, his agents, representatives, employees or subcontractors and Contractor is free to purchase additional insurance as may be determined necessary.

A. **MINIMUM SCOPE AND LIMITS OF INSURANCE:** Contractor shall provide coverage with limits of liability not less than those stated below.

1. **Commercial General Liability – Occurrence Form**
   Policy shall include bodily injury, property damage and broad form contractual liability coverage.
   - General Aggregate $2,000,000
   - Products – Completed Operations Aggregate $1,000,000

- Personal and Advertising Injury $1,000,000
- Each Occurrence $1,000,000

a. The policy shall be endorsed to include the following additional insured language: **"The County of Gila shall be named as an additional insured with respect to liability arising out of the activities performed by, or on behalf of the Contractor".**

2. **Worker's Compensation and Employers' Liability**

| | |
|---|---|
| Workers' Compensation | Statutory |
| Employers' Liability | |
| Each Accident | $100,000 |
| Disease – Each Employee | $100,000 |
| Disease – Policy Limit | $500,000 |

a. Policy shall contain a **waiver of subrogation** against the County of Gila.

3. **Automobile Liability**

Bodily Injury and Property Damage for any owned, hired, and non-owned vehicles used in the performance of this Contract.

Combined Single Limit (CSL) $1,000,000

a. The policy shall be endorsed to include the following additional insured language: **"The County of Gila shall be named as an additional insured with respect to liability arising out of the activities performed by, or on behalf of the Contractor, including automobiles owned, leased, hired or borrowed by the Contractor".**

B. **ADDITIONAL INSURANCE REQUIREMENTS:** The policies shall include, or be endorsed to include, the following provisions:

1. On insurance policies where the County of Gila is named as an additional insured, the County of Gila shall be an additional insured to the full limits of liability purchased by the Contractor even if those limits of liability are in excess of those required by this Contract.
2. The Contractor's insurance coverage shall be primary insurance and non-contributory with respect to all other available sources.
3. Coverage provided by the Contractor shall not be limited to the liability assumed under the indemnification provisions of this Contract.

C. **NOTICE OF CANCELLATION:** Each insurance policy required by the insurance provisions of this Contract shall provide the required coverage and shall not be suspended, voided, canceled, reduced in coverage or endorsed to lower limits except after thirty (30) days prior written notice has been given to the County. Such notice shall be sent directly to **(Gila County Purchasing, 1400 E. Ash St., Globe, AZ, 85501)** and shall be sent by certified mail, return receipt requested.

D. **ACCEPTABILITY OF INSURERS:** Insurance is to be placed with insurers duly licensed or approved unlicensed companies in the state of Arizona and with an "A.M. Best" rating of not less than B+ VI. The County in no way warrants that the above-required minimum insurer rating is sufficient to protect the Contractor from potential insurer insolvency.

E. **VERIFICATION OF COVERAGE:** Contractor shall furnish the County with certificates of insurance (ACORD form or equivalent approved by the County) as required by this Contract. The certificates for

each insurance policy are to be signed by a person authorized by that insurer to bind coverage on its behalf.

***All certificates and endorsements are to be received and approved by the County before work commences.*** Each insurance policy required by this Contract must be in effect at or prior to commencement of work under this Contract and remain in effect for the duration of the project. Failure to maintain the insurance policies as required by this Contract or to provide evidence of renewal is a material breach of contract.

All certificates required by this Contract shall be sent directly to **(Gila County Purchasing, 1400 E. Ash St., Globe, AZ, 85501)**. The County project/contract number and project description shall be noted on the certificate of insurance. The County reserves the right to require complete, certified copies of all insurance policies required by this Contract at any time.

F. **SUBCONTRACTORS:** Contractors' certificate(s) shall include all subcontractors as additional insured's under its policies **or** Contractor shall furnish to the County separate certificates and endorsements for each subcontractor. All coverage's for subcontractors shall be subject to the minimum requirements identified above.

G. **APPROVAL:** Any modification or variation from the insurance requirements in this Contract shall be made by the County Attorney, whose decision shall be final. Such action will not require a formal Contract amendment, but may be made by administrative action.

**ARTICLE V – LEGAL ARIZONA WORKERS ACT COMPLIANCE:** Contractor hereby warrants that it will at all times during the term of this Contract comply with all federal immigration laws applicable to Contractor's employment of its employees, and with the requirements of A.R.S. § 23-214 (A) (together the "State and Federal Immigration Laws"). Contractor shall further ensure that each subcontractor who performs any work for Contractor under this contract likewise complies with the State and Federal Immigration Laws. County shall have the right at any time to inspect the books and records of Contractor and any subcontractor in order to verify such party's compliance with the State and Federal Immigration Laws.

Any breach of Contractor's or any subcontractor's warranty of compliance with the State and Federal Immigration Laws, or of any other provision of this section, shall be deemed to be a material breach of this Contract subjecting Contractor to penalties up to and including suspension or termination of this Contract. If the breach is by a subcontractor, and the subcontract is suspended or terminated as a result, Contractor shall be required to take such steps as may be necessary to either self-perform the services that would have been provided under the subcontract or retain a replacement subcontractor as soon as possible so as not to delay project completion.

Contractor shall advise each subcontractor of County's rights, and the subcontractor's obligations, under this Article by including a provision in each subcontract substantially in the following form: "Subcontractor hereby warrants that it will at all times during the term of this contract comply with all federal immigration laws applicable to Subcontractor's employees, and with the requirements of A.R.S. § 23-214 (A). Subcontractor further agrees that County may inspect the Subcontractor's books and records to insure that Subcontractor is in compliance with these requirements. Any breach of this paragraph by Subcontractor will be deemed to be a material breach of this contract subjecting Subcontractor to penalties up to and including suspension or termination of this contract."

Any additional costs attributable directly or indirectly to remedial action under this Article shall be the responsibility of Contractor. In the event that remedial action under this Article results in delay to one or more tasks on the critical path of Contractor's approved construction or critical milestones schedule, such period of delay shall be deemed excusable delay for which Contractor shall be entitled to an extension of time, but not costs.

**ARTICLE VI – LAWS AND ORDINANCES:** This agreement shall be enforced under the laws of the State of Arizona. Contractor shall maintain in current status all Federal, State and Local licenses and permits required for the operation of the business conducted by the Contractor. The Contractor shall comply with the applicable provisions of the Americans with Disabilities Act (Public Law 101-336, 42 U.S.C. 12101-12213) and applicable federal regulations under the Act.

**ARTICLE VII– ANTI-TERRORISM WARRANTY:** Pursuant to A.R.S. § 35-393.06(B) and 35-301.06(A) the Contractor certifies that it does not have scrutinized business operations in Iran or Sudan and that they are in compliance with the Export Administration Act and not on the Excluded Parties List.

**ARTICLE VIII – CANCELLATION:** This agreement is subject to cancellation pursuant to A.R.S. §38-511. If the Agreement is terminated, the county shall be liable only for payment for services rendered and accepted material received by the County before the effective date of termination.

**ARTICLE IX – RELATIONSHIP OF THE PARTIES:** Contractor is an independent contractor of the County. Contractor represents that he has or will secure, at his own expense, all personnel required in performing the services under this contract. Such personnel shall not be employees of or have any contractual relationship with the County. All personnel engaged in work under this contract shall be fully qualified and shall be authorized or permitted under State and local law to perform such services. Contractor warrants that he has obtained or will obtain Worker's Compensation Insurance for his employees working on this contract and that any subcontractors will likewise obtain Worker's Compensation Insurance for of their employees working on this contract. It is further agreed by Contractor that he shall obey all state and federal statutes, rules, and regulations which are applicable to provisions of the services called for herein. Neither Contractor nor any employee of the Contractor shall be deemed an officer, employee, or agent of the County.

**ARTICLE X – NON-APPROPRIATIONS CLAUSE:** Contractor acknowledges that the County is a governmental entity, and the contract validity is based upon the availability of public funding under its authority. In the event that public funds are unavailable and not appropriated for the performance of County's obligations under this contract, then this contract shall automatically expire without penalty to County after written notice to Contractor of the unavailability and non-appropriation of public funds. It is expressly agreed that the County shall only activate this non-appropriation provision as an emergency fiscal measure. The County shall not activate this non-appropriation provision for its convenience, to circumvent the requirements of this contract, or to enable the County to contract with another Contractor for the same supplies or services covered under this Addendum.

**ARTICLE XI – ENTIRE CONTRACT CLAUSE:** The Contractor and the County have read this Contract and agree to be bound by all of its terms, and further agree that it constitutes the entire contract between

the two parties and may only be modified by a written mutual contract signed by the parties. No oral agreement or oral provision outside this Contract shall have any force or effect

**ARTICLE XII – NON-WAIVER OF ENFORCEABILITY:** Failure of the County to enforce, at any time, any of the provisions of this Contract, or to request at any time performance by Contractor of any of the provisions hereof, shall in no way be construed to be a waiver of such provisions, nor in any way affect the validity of this contract or any part thereof, or the right of the County to enforce each and every provision

**ARTICLE XIII – GOVERNING LAW:** Both parties agree that this Contract shall be governed by the laws of the state of Arizona. The parties further agree that the jurisdiction for any legal disputes arising out of this Contract shall be the Superior Court of the State of Arizona. The parties agree that even if this Contract does not specifically reference any provision required by state or federal law, those state and federally required provisions are incorporated into this Contract by this reference as though they were specifically listed herein.

**ARTICLE XIV– TERM:** Contract shall be effective date signed by the County Manager and expires January 21, 2011.

**ARTICLE XV – PAYMENT/BILLING:** Contractor shall be paid fees stated in Article II of this agreement, but in no event shall payment exceed **$ 2,369.10** for the contract term without prior written approval from the County.

All invoices shall be submitted to Gila County Accounts Payable, 1400 E. Ash St, Globe, Arizona and include the following information:

- Purchase Order Number
- Contract Number
- Invoice Number
- Service Location
- Vendor Name and Address
- Description of Service

Any alterations to the scope of work resulting in a change in cost must have prior written approval by the County. Any unauthorized work may result in non-payment to the vendor.

Gila County employs a "Net 15" payment term for services meaning the payment will be issued fifteen (15) days from the date the County receives the invoice from the Contractor. Purchase orders sent to the Contractor reflect these terms and conditions.

The Contractor shall have a current I.R.S. W-9 form on file with the County unless not required by law. The County shall not remit payment if the Contractor does not have a current W-9.

**IN WITNESS WHEREOF,** two (2) identical counterparts of this contract, each which shall include original signatures and for all purposes be deemed an original thereof, have been duly executed by the parties hereinabove named, on the date and year first above written.

**GILA COUNTY**

**Don E. McDaniel Jr., County Manager**

**Date:** 12/21/11

**EXCEL PUMP AND WELL SERVICE**

**Signature**

David T. Ruiz

**Print Name**

**Date:** 12/13/11

**APPROVED AS TO FORM**

**Bryan B. Chambers, Chief Deputy County Attorney**
**for Daisy Flores, County Attorney**

**Tommie C. Martin, District I**
P.O. Box 2297 Payson, AZ. 85547
(928) 474-2029

**Michael A. Pastor, District II**
1400 E. Ash St. Globe, AZ. 85501
(928) 425-3231 Ext. 8753

**Shirley L. Dawson, District III**
1400 E. Ash St. Globe, AZ. 85501
(928) 425-3231 Ext. 8511

**GILA COUNTY**
www.gilacountyaz.gov

**Don E. McDaniel Jr., County Manager**
Phone (928) 425-3231 Ext.8761

**Joseph T. Heatherly, Finance Director**
Phone (928) 425-3231 Ext. 8743

FAX (928) 425-0319
TTY: 7-1-1

**SERVICE AGREEMENT NO. 121011**

**WEATHERIZATION PROJECT NO. HH#8326**

**THIS AGREEMENT,** made and entered into this 21st day of December, **2011**, by and between the Gila County Board of Supervisors, a political subdivision of the State of Arizona, hereinafter designated the County, and Green Tree Construction, of the Town of Claypool, State of Arizona, hereinafter designated the Contractor.

**WITNESSETH:** The Contractor, for and in consideration of the sum to be paid him by the County, in the manner and at the time hereinafter provided, and of the other covenants and agreement's herein contained, hereby agrees, for himself, his heirs, administrators, successors, and assigns as follows:

**ARTICLE 1 – SCOPE OF SERVICES:** The Contractor shall provide for the complete provision in the scope of work below of Weatherization Project HH#8326 in a good and workmanlike and substantial manner and to the satisfaction of the County under the direction of the Housing Services Manager or designee.

All work performed by the Contractor shall be completed to local codes and regulation per Gila County and the State of Arizona and consistent with all Weatherization guidelines.

Scope of Work: Refer to Exhibit "A" made a binding part of this agreement as set forth herein.

Contractor Fee's: Refer to Exhibit "A"

**ARTICLE 2 – TERMINATION:** The County reserves the right to terminate the Contract, in whole or in part at any time, when in the best interest of the County, without penalty or recourse. Upon receipt of the written notice, the Contractor shall stop all work as directed in the notice. If the contract is terminated, the County shall be liable only for the services rendered under this contract and accepted material received by the County before the effective date of termination.

**ARTICLE 3 - INDEMNIFICATION:** Contractor shall indemnify, defend, save and hold harmless the County of Gila and its officers, officials, agents, and employees (hereinafter referred to as "Indemnitee") from and against any and all claims, actions, liabilities, damages, losses, or expenses (including court costs,

attorneys' fees, and costs of claim processing, investigation and litigation) (hereinafter referred to as "Claims") for bodily injury or personal injury (including death), or loss or damage to tangible or intangible property caused, or alleged to be caused, in whole or in part, by the negligent or willful acts or omissions of Contractor or any of its owners, officers, directors, agents, employees or subcontractors. This indemnity includes any claim or amount arising out of or recovered under the Workers' Compensation Law or arising out of the failure of such contractor to conform to any federal, state or local law, statute, ordinance, rule, regulation or court decree. It is the specific intention of the parties that the Indemnitee shall, in all instances, except for Claims arising solely from the negligent or willful acts or omissions of the Indemnitee, be indemnified by Contractor from and against any and all claims. It is agreed that Contractor will be responsible for primary loss investigation, defense and judgment costs where this indemnification is applicable. In consideration of the award of this contract, the Contractor agrees to waive all rights of subrogation against the County, its officers, officials, agents and employees for losses arising from the work performed by the Contractor for the County.

**ARTICLE 4 – INSURANCE REQUIREMENTS:** Contractor and subcontractors shall procure and maintain until all of their obligations have been discharged, including any warranty periods under this Contract are satisfied, insurance against claims for injury to persons or damage to property which may arise from or in connection with the performance of the work hereunder by the Contractor, his agents, representatives, employees or subcontractors.

The insurance requirements herein are minimum requirements for this Contract and in no way limit the indemnity covenants contained in this Contract. The County in no way warrants that the minimum limits contained herein are sufficient to protect the Contractor from liabilities that might arise out of the performance of the work under this contract by the Contractor, his agents, representatives, employees or subcontractors and Contractor is free to purchase additional insurance as may be determined necessary.

A. **MINIMUM SCOPE AND LIMITS OF INSURANCE:** Contractor shall provide coverage with limits of liability not less than those stated below.

1. **Commercial General Liability – Occurrence Form**
   Policy shall include bodily injury, property damage and broad form contractual liability coverage.
   - General Aggregate $2,000,000
   - Products – Completed Operations Aggregate $1,000,000
   - Personal and Advertising Injury $1,000,000
   - Each Occurrence $1,000,000

   a. The policy shall be endorsed to include the following additional insured language: **"The County of Gila shall be named as an additional insured with respect to liability arising out of the activities performed by, or on behalf of the Contractor".**

2. **Worker's Compensation and Employers' Liability**

| | |
|---|---|
| Workers' Compensation | Statutory |
| Employers' Liability | |
| Each Accident | $100,000 |
| Disease – Each Employee | $100,000 |
| Disease – Policy Limit | $500,000 |

   a. Policy shall contain a **waiver of subrogation** against the County of Gila.

3. **Professional Liability (Errors and Omissions Liability)**

| | |
|---|---|
| Each Claim | $1,000,000 |
| Annual Aggregate | $2,000,000 |

a. In the event that the professional liability insurance required by this Contract is written on a claims-made basis, Contractor warrants that any retroactive date under the policy shall precede the effective date of this Contract; and that either continuous coverage will be maintained or an extended discovery period will be exercised for a period of two (2) years beginning at the time work under this Contract is completed.

B. **ADDITIONAL INSURANCE REQUIREMENTS:** The policies shall include, or be endorsed to include, the following provisions:

1. On insurance policies where the County of Gila is named as an additional insured, the County of Gila shall be an additional insured to the full limits of liability purchased by the Contractor even if those limits of liability are in excess of those required by this Contract.
2 The Contractor's insurance coverage shall be primary insurance and non-contributory with respect to all other available sources.
3. Coverage provided by the Contractor shall not be limited to the liability assumed under the indemnification provisions of this Contract.

C. **NOTICE OF CANCELLATION:** Each insurance policy required by the insurance provisions of this Contract shall provide the required coverage and shall not be suspended, voided, canceled, reduced in coverage or endorsed to lower limits except after thirty (30) days prior written notice has been given to the County. Such notice shall be sent directly to **Gila County Purchasing Department, 1400 E. Ash St., Globe, AZ, 85501** and shall be sent by certified mail, return receipt requested.

D. **ACCEPTABILITY OF INSURERS:** Insurance is to be placed with insurers duly licensed or approved unlicensed companies in the state of Arizona and with an "A.M. Best" rating of not less than B+ VI. The County in no way warrants that the above-required minimum insurer rating is sufficient to protect the Contractor from potential insurer insolvency.

E. **VERIFICATION OF COVERAGE:** Contractor shall furnish the County with certificates of insurance (ACORD form or equivalent approved by the County) as required by this Contract. The certificates for each insurance policy are to be signed by a person authorized by that insurer to bind coverage on its behalf.

***All certificates and endorsements are to be received and approved by the County before work commences.*** Each insurance policy required by this Contract must be in effect at or prior to commencement of work under this Contract and remain in effect for the duration of the project. Failure to maintain the insurance policies as required by this Contract or to provide evidence of renewal is a material breach of contract.

All certificates required by this Contract shall be sent directly to **Gila County Purchasing Department, 1400 E. Ash St., Globe, AZ, 85501.** The County project/contract number and project description shall be noted on the certificate of insurance. The County reserves the right to require complete, certified copies of all insurance policies required by this Contract at any time.

F. **SUBCONTRACTORS:** Contractors' certificate(s) shall include all subcontractors as additional insured's under its policies or Contractor shall furnish to the County separate certificates and endorsements for each subcontractor. All coverage's for subcontractors shall be subject to the minimum requirements identified above.

G. **APPROVAL:** Any modification or variation from the insurance requirements in this Contract shall be made by the County Attorney, whose decision shall be final. Such action will not require a formal Contract amendment, but may be made by administrative action.

**ARTICLE 5 – LEGAL ARIZONA WORKERS ACT COMPLIANCE:** Contractor hereby warrants that it will at all times during the term of this Contract comply with all federal immigration laws applicable to Contractor's employment of its employees, and with the requirements of A.R.S. § 23-214 (A) (together the "State and Federal Immigration Laws"). Contractor shall further ensure that each subcontractor who performs any work for Contractor under this contract likewise complies with the State and Federal Immigration Laws. County shall have the right at any time to inspect the books and records of Contractor and any subcontractor in order to verify such party's compliance with the State and Federal Immigration Laws.

Any breach of Contractor's or any subcontractor's warranty of compliance with the State and Federal Immigration Laws, or of any other provision of this section, shall be deemed to be a material breach of this Contract subjecting Contractor to penalties up to and including suspension or termination of this Contract. If the breach is by a subcontractor, and the subcontract is suspended or terminated as a result, Contractor shall be required to take such steps as may be necessary to either self-perform the services that would have been provided under the subcontract or retain a replacement subcontractor as soon as possible so as not to delay project completion.

Contractor shall advise each subcontractor of County's rights, and the subcontractor's obligations, under this Article by including a provision in each subcontract substantially in the following form: "Subcontractor hereby warrants that it will at all times during the term of this contract comply with all federal immigration laws applicable to Subcontractor's employees, and with the requirements of A.R.S. § 23-214 (A). Subcontractor further agrees that County may inspect the Subcontractor's books and records to insure that Subcontractor is in compliance with these requirements. Any breach of this paragraph by Subcontractor will be deemed to be a material breach of this contract subjecting Subcontractor to penalties up to and including suspension or termination of this contract."

Any additional costs attributable directly or indirectly to remedial action under this Article shall be the responsibility of Contractor. In the event that remedial action under this Article results in delay to one or more tasks on the critical path of Contractor's approved construction or critical milestones schedule, such period of delay shall be deemed excusable delay for which Contractor shall be entitled to an extension of time, but not costs.

**ARTICLE 6 – LAWS AND ORDINANCES:** This agreement shall be enforced under the laws of the State of Arizona. Contractor shall maintain in current status all Federal, State and Local licenses and permits required for the operation of the business conducted by the Contractor. The Contractor shall comply with the applicable provisions of the Americans with Disabilities Act (Public Law 101-336, 42 U.S.C. 12101-12213) and applicable federal regulations under the Act.

**ARTICLE 7– ANTI-TERRORISM WARRANTY:** Pursuant to A.R.S. § 35-393.06(B) and 35-301.06(A) the Contractor certifies that it does not have scrutinized business operations in Iran or Sudan and that they are in compliance with the Export Administration Act and not on the Excluded Parties List.

**ARTICLE 8 – CANCELLATION:** This agreement is subject to cancellation pursuant to A.R.S. §38-511. If the Agreement is terminated, the county shall be liable only for payment for services rendered and accepted material received by the County before the effective date of termination.

**ARTICLE 9 – RELATIONSHIP OF THE PARTIES:** Contractor is an independent contractor of the County. Contractor represents that he has or will secure, at his own expense, all personnel required in performing the services under this contract. Such personnel shall not be employees of or have any contractual relationship with the County. All personnel engaged in work under this contract shall be fully qualified and shall be authorized or permitted under State and local law to perform such services. Contractor warrants that he has obtained or will obtain Worker's Compensation Insurance for his employees working on this contract and that any subcontractors will likewise obtain Worker's Compensation Insurance for of their employees working on this contract. It is further agreed by Contractor that he shall obey all state and federal statutes, rules, and regulations which are applicable to provisions of the services called for herein. Neither Contractor nor any employee of the Contractor shall be deemed an officer, employee, or agent of the County.

**ARTICLE 10 – NON-APPROPRIATIONS CLAUSE:** Contractor acknowledges that the County is a governmental entity, and the contract validity is based upon the availability of public funding under its authority. In the event that public funds are unavailable and not appropriated for the performance of County's obligations under this contract, then this contract shall automatically expire without penalty to County after written notice to Contractor of the unavailability and non-appropriation of public funds. It is expressly agreed that the County shall only activate this non-appropriation provision as an emergency fiscal measure. The County shall not activate this non-appropriation provision for its convenience, to circumvent the requirements of this contract, or to enable the County to contract with another Contractor for the same supplies or services covered under this Addendum.

**ARTICLE 11 – ENTIRE CONTRACT CLAUSE:** The Contractor and the County have read this Contract and agree to be bound by all of its terms, and further agree that it constitutes the entire contract between the two parties and may only be modified by a written mutual contract signed by the parties. No oral agreement or oral provision outside this Contract shall have any force or effect

**ARTICLE 12 – NON-WAIVER OF ENFORCEABILITY:** Failure of the County to enforce, at any time, any of the provisions of this Contract, or to request at any time performance by Contractor of any of the provisions hereof, shall in no way be construed to be a waiver of such provisions, nor in any way affect the validity of this contract or any part thereof, or the right of the County to enforce each and every provision

**ARTICLE 13 – GOVERNING LAW:** Both parties agree that this Contract shall be governed by the laws of the state of Arizona. The parties further agree that the jurisdiction for any legal disputes arising out of this Contract shall be the Superior Court of the State of Arizona. The parties agree that even if this Contract does not specifically reference any provision required by state or federal law, those state and federally required provisions are incorporated into this Contract by this reference as though they were specifically listed herein.

**ARTICLE 14– TERM:** Contract shall be effective date signed by the County Manager and expires March 31, 2012.

**ARTICLE 15 – PAYMENT/BILLING:** Contractor shall be paid a flat fee of **$ 11,145.63** for completion of the project as outlined in the Scope of Services.

All invoices shall be submitted to Gila County Accounts Payable, 1400 E. Ash St, Globe, Arizona and include the following information:

- Purchase Order Number
- Contract Number
- Invoice Number
- Service Location
- Vendor Name and Address
- Description of Service

Any alterations to the scope of work resulting in a change in cost must have prior written approval by the County. Any unauthorized work may result in non-payment to the vendor.

Gila County employs a "Net 15" payment term for services meaning the payment will be issued fifteen (15) days from the date the County receives the invoice from the Contractor. Purchase orders sent to the Contractor reflect these terms and conditions.

The Contractor shall have a current I.R.S. W-9 form on file with the County unless not required by law. The County shall not remit payment if the Contractor does not have a current W-9.

**IN WITNESS WHEREOF,** two (2) identical counterparts of **Contract No. 121011,** each which shall include original signatures and for all purposes be deemed an original thereof, have been duly executed by the parties hereinabove named, on the date and year first above written.

**GILA COUNTY**

**Don E. McDaniel Jr., County Manager**

**Date:** 12/21/11

**GREEN TREE CONSTRUCTION**

**Signature**

Gerald L. Philpot Sr

**Print Name**

**Date:** 12/13/2011

**APPROVED AS TO FORM**

**Bryan B. Chambers, Chief Deputy County Attorney**
**for Daisy Flores, County Attorney**

EXHIBIT "A"

**Green Tree Construction**

**Proposal for Work**

This proposal for work is based on the energy audit performed
Miami Az. 85539 . on 10/26/2011.

1. Seal home to WAP standards. Reduce 2000 C.F.M. $ 800.00

2. Run the T.P.T. lines out to code on two water heaters. $ 250.00

3. Insulate the home to R - 38 blow in. $ 816.00

4. Install a 2.0 ton 14 seer heat pump with 5 K.W. Strip heaters on roof and ducted to each room. $ 6500.00

5. Install 2 sun screens on the south side of the house. $ 125.00

6. Upgrade the electrical service to a 200 A. and install G.F.C.I. circuits in wet locations. $ 2000.00

Total for job, $10491.00

Tax. $ 654.63

Grand Total, $ 11,145.63

**Tommie C. Martin, District I**
P.O. Box 2297 Payson, AZ. 85547
(928) 474-2029

**Michael A. Pastor, District II**
1400 E. Ash St. Globe, AZ. 85501
(928) 425-3231 Ext. 8753

**Shirley L. Dawson, District III**
1400 E. Ash St. Globe, AZ. 85501
(928) 425-3231 Ext. 8511

**GILA COUNTY**
www.gilacountyaz.gov

**Don E. McDaniel Jr., County Manager**
Phone (928) 425-3231 Ext.8761

**Joseph T. Heatherly, Finance Director**
Phone (928) 425-3231 Ext. 8743

FAX (928) 425-0319
TTY: 7-1-1

**SERVICE AGREEMENT NO. 121311**

**WEATHERIZATION PROJECT NO. HH #2865, #3124, #7365**

**THIS AGREEMENT,** made and entered into this 21st day of December, **2011**, by and between the Gila County Board of Supervisors, a political subdivision of the State of Arizona, hereinafter designated the County, and **Rodriguez Construction Inc.**, of the City of Globe, State of Arizona, hereinafter designated the Contractor.

**WITNESSETH:** The Contractor, for and in consideration of the sum to be paid him by the County, in the manner and at the time hereinafter provided, and of the other covenants and agreement's herein contained, hereby agrees, for himself, his heirs, administrators, successors, and assigns as follows:

**ARTICLE 1 – SCOPE OF SERVICES:** The Contractor shall provide for the complete provision in the scope of work below of Weatherization Projects 2865, 3124, and 7365, in a good and workmanlike and substantial manner and to the satisfaction of the County under the direction of the Housing Services Manager or designee.

All work performed by the Contractor shall be completed to local codes and regulation per Gila County and the State of Arizona and consistent with all Weatherization guidelines.

Scope of Work: Refer to attached Exhibits A, B, and C. By mention the exhibits are made a binding part of this agreement as set forth herein.
Exhibit "A" HH# 2865, Exhibit "B" HH# 3124, Exhibit "C" HH# 7365

Contractor Fee's: Refer to Exhibits "A, B, & C"

**ARTICLE 2 – TERMINATION:** The County reserves the right to terminate the Contract, in whole or in part at any time, when in the best interest of the County, without penalty or recourse. Upon receipt of the written notice, the Contractor shall stop all work as directed in the notice. If the contract is terminated, the County shall be liable only for the services rendered under this contract and accepted material received by the County before the effective date of termination.

**ARTICLE 3 - INDEMNIFICATION:** Contractor shall indemnify, defend, save and hold harmless the County of Gila and its officers, officials, agents, and employees (hereinafter referred to as "Indemnitee") from and against any and all claims, actions, liabilities, damages, losses, or expenses (including court costs, attorneys' fees, and costs of claim processing, investigation and litigation) (hereinafter referred to as "Claims") for bodily injury or personal injury (including death), or loss or damage to tangible or intangible property caused, or alleged to be caused, in whole or in part, by the negligent or willful acts or omissions of Contractor or any of its owners, officers, directors, agents, employees or subcontractors. This indemnity includes any claim or amount arising out of or recovered under the Workers' Compensation Law or arising out of the failure of such contractor to conform to any federal, state or local law, statute, ordinance, rule, regulation or court decree. It is the specific intention of the parties that the Indemnitee shall, in all instances, except for Claims arising solely from the negligent or willful acts or omissions of the Indemnitee, be indemnified by Contractor from and against any and all claims. It is agreed that Contractor will be responsible for primary loss investigation, defense and judgment costs where this indemnification is applicable. In consideration of the award of this contract, the Contractor agrees to waive all rights of subrogation against the County, its officers, officials, agents and employees for losses arising from the work performed by the Contractor for the County.

**ARTICLE 4 – INSURANCE REQUIREMENTS:** Contractor and subcontractors shall procure and maintain until all of their obligations have been discharged, including any warranty periods under this Contract are satisfied, insurance against claims for injury to persons or damage to property which may arise from or in connection with the performance of the work hereunder by the Contractor, his agents, representatives, employees or subcontractors.

The insurance requirements herein are minimum requirements for this Contract and in no way limit the indemnity covenants contained in this Contract. The County in no way warrants that the minimum limits contained herein are sufficient to protect the Contractor from liabilities that might arise out of the performance of the work under this contract by the Contractor, his agents, representatives, employees or subcontractors and Contractor is free to purchase additional insurance as may be determined necessary.

A. **MINIMUM SCOPE AND LIMITS OF INSURANCE:** Contractor shall provide coverage with limits of liability not less than those stated below.

1. **Commercial General Liability – Occurrence Form**
   Policy shall include bodily injury, property damage and broad form contractual liability coverage.
   - General Aggregate $2,000,000
   - Products – Completed Operations Aggregate $1,000,000
   - Personal and Advertising Injury $1,000,000
   - Each Occurrence $1,000,000

   a. The policy shall be endorsed to include the following additional insured language: **"The County of Gila shall be named as an additional insured with respect to liability arising out of the activities performed by, or on behalf of the Contractor".**

2. **Worker's Compensation and Employers' Liability**

| | |
|---|---|
| Workers' Compensation | Statutory |
| Employers' Liability | |
| Each Accident | $100,000 |
| Disease – Each Employee | $100,000 |
| Disease – Policy Limit | $500,000 |

   a. Policy shall contain a **waiver of subrogation** against the County of Gila.

3. **Professional Liability (Errors and Omissions Liability)**

| | |
|---|---|
| Each Claim | $1,000,000 |
| Annual Aggregate | $2,000,000 |

a. In the event that the professional liability insurance required by this Contract is written on a claims-made basis, Contractor warrants that any retroactive date under the policy shall precede the effective date of this Contract; and that either continuous coverage will be maintained or an extended discovery period will be exercised for a period of two (2) years beginning at the time work under this Contract is completed.

B. **ADDITIONAL INSURANCE REQUIREMENTS:** The policies shall include, or be endorsed to include, the following provisions:

1. On insurance policies where the County of Gila is named as an additional insured, the County of Gila shall be an additional insured to the full limits of liability purchased by the Contractor even if those limits of liability are in excess of those required by this Contract.
2. The Contractor's insurance coverage shall be primary insurance and non-contributory with respect to all other available sources.
3. Coverage provided by the Contractor shall not be limited to the liability assumed under the indemnification provisions of this Contract.

C. **NOTICE OF CANCELLATION:** Each insurance policy required by the insurance provisions of this Contract shall provide the required coverage and shall not be suspended, voided, canceled, reduced in coverage or endorsed to lower limits except after thirty (30) days prior written notice has been given to the County. Such notice shall be sent directly to **Gila County Purchasing Department, 1400 E. Ash St., Globe, AZ, 85501** and shall be sent by certified mail, return receipt requested.

D. **ACCEPTABILITY OF INSURERS:** Insurance is to be placed with insurers duly licensed or approved unlicensed companies in the state of Arizona and with an "A.M. Best" rating of not less than B+ VI. The County in no way warrants that the above-required minimum insurer rating is sufficient to protect the Contractor from potential insurer insolvency.

E. **VERIFICATION OF COVERAGE:** Contractor shall furnish the County with certificates of insurance (ACORD form or equivalent approved by the County) as required by this Contract. The certificates for each insurance policy are to be signed by a person authorized by that insurer to bind coverage on its behalf.

***All certificates and endorsements are to be received and approved by the County before work commences.*** Each insurance policy required by this Contract must be in effect at or prior to commencement of work under this Contract and remain in effect for the duration of the project. Failure to maintain the insurance policies as required by this Contract or to provide evidence of renewal is a material breach of contract.

All certificates required by this Contract shall be sent directly to **Gila County Purchasing Department, 1400 E. Ash St., Globe, AZ, 85501.** The County project/contract number and project description shall be noted on the certificate of insurance. The County reserves the right to require complete, certified copies of all insurance policies required by this Contract at any time.

F. **SUBCONTRACTORS:** Contractors' certificate(s) shall include all subcontractors as additional insured's under its policies or Contractor shall furnish to the County separate certificates and endorsements for each subcontractor. All coverage's for subcontractors shall be subject to the minimum requirements identified above.

G. **APPROVAL:** Any modification or variation from the insurance requirements in this Contract shall be made by the County Attorney, whose decision shall be final. Such action will not require a formal Contract amendment, but may be made by administrative action.

**ARTICLE 5 – LEGAL ARIZONA WORKERS ACT COMPLIANCE:** Contractor hereby warrants that it will at all times during the term of this Contract comply with all federal immigration laws applicable to Contractor's employment of its employees, and with the requirements of A.R.S. § 23-214 (A) (together the "State and Federal Immigration Laws"). Contractor shall further ensure that each subcontractor who performs any work for Contractor under this contract likewise complies with the State and Federal Immigration Laws. County shall have the right at any time to inspect the books and records of Contractor and any subcontractor in order to verify such party's compliance with the State and Federal Immigration Laws.

Any breach of Contractor's or any subcontractor's warranty of compliance with the State and Federal Immigration Laws, or of any other provision of this section, shall be deemed to be a material breach of this Contract subjecting Contractor to penalties up to and including suspension or termination of this Contract. If the breach is by a subcontractor, and the subcontract is suspended or terminated as a result, Contractor shall be required to take such steps as may be necessary to either self-perform the services that would have been provided under the subcontract or retain a replacement subcontractor as soon as possible so as not to delay project completion.

Contractor shall advise each subcontractor of County's rights, and the subcontractor's obligations, under this Article by including a provision in each subcontract substantially in the following form: "Subcontractor hereby warrants that it will at all times during the term of this contract comply with all federal immigration laws applicable to Subcontractor's employees, and with the requirements of A.R.S. § 23-214 (A). Subcontractor further agrees that County may inspect the Subcontractor's books and records to insure that Subcontractor is in compliance with these requirements. Any breach of this paragraph by Subcontractor will be deemed to be a material breach of this contract subjecting Subcontractor to penalties up to and including suspension or termination of this contract."

Any additional costs attributable directly or indirectly to remedial action under this Article shall be the responsibility of Contractor. In the event that remedial action under this Article results in delay to one or more tasks on the critical path of Contractor's approved construction or critical milestones schedule, such period of delay shall be deemed excusable delay for which Contractor shall be entitled to an extension of time, but not costs.

**ARTICLE 6 – LAWS AND ORDINANCES:** This agreement shall be enforced under the laws of the State of Arizona. Contractor shall maintain in current status all Federal, State and Local licenses and permits required for the operation of the business conducted by the Contractor. The Contractor shall comply with the applicable provisions of the Americans with Disabilities Act (Public Law 101-336, 42 U.S.C. 12101-12213) and applicable federal regulations under the Act.

**ARTICLE 7– ANTI-TERRORISM WARRANTY:** Pursuant to A.R.S. § 35-393.06(B) and 35-301.06(A) the Contractor certifies that it does not have scrutinized business operations in Iran or Sudan and that they are in compliance with the Export Administration Act and not on the Excluded Parties List.

**ARTICLE 8 – CANCELLATION:** This agreement is subject to cancellation pursuant to A.R.S. §38-511. If the Agreement is terminated, the county shall be liable only for payment for services rendered and accepted material received by the County before the effective date of termination.

**ARTICLE 9 – RELATIONSHIP OF THE PARTIES:** Contractor is an independent contractor of the County. Contractor represents that he has or will secure, at his own expense, all personnel required in performing the services under this contract. Such personnel shall not be employees of or have any contractual relationship with the County. All personnel engaged in work under this contract shall be fully qualified and shall be authorized or permitted under State and local law to perform such services. Contractor warrants that he has obtained or will obtain Worker's Compensation Insurance for his employees working on this contract and that any subcontractors will likewise obtain Worker's Compensation Insurance for of their employees working on this contract. It is further agreed by Contractor that he shall obey all state and federal statutes, rules, and regulations which are applicable to provisions of the services called for herein. Neither Contractor nor any employee of the Contractor shall be deemed an officer, employee, or agent of the County.

**ARTICLE 10 – NON-APPROPRIATIONS CLAUSE:** Contractor acknowledges that the County is a governmental entity, and the contract validity is based upon the availability of public funding under its authority. In the event that public funds are unavailable and not appropriated for the performance of County's obligations under this contract, then this contract shall automatically expire without penalty to County after written notice to Contractor of the unavailability and non-appropriation of public funds. It is expressly agreed that the County shall only activate this non-appropriation provision as an emergency fiscal measure. The County shall not activate this non-appropriation provision for its convenience, to circumvent the requirements of this contract, or to enable the County to contract with another Contractor for the same supplies or services covered under this Addendum.

**ARTICLE 11 – ENTIRE CONTRACT CLAUSE:** The Contractor and the County have read this Contract and agree to be bound by all of its terms, and further agree that it constitutes the entire contract between the two parties and may only be modified by a written mutual contract signed by the parties. No oral agreement or oral provision outside this Contract shall have any force or effect

**ARTICLE 12 – NON-WAIVER OF ENFORCEABILITY:** Failure of the County to enforce, at any time, any of the provisions of this Contract, or to request at any time performance by Contractor of any of the provisions hereof, shall in no way be construed to be a waiver of such provisions, nor in any way affect the validity of this contract or any part thereof, or the right of the County to enforce each and every provision

**ARTICLE 13 – GOVERNING LAW:** Both parties agree that this Contract shall be governed by the laws of the state of Arizona. The parties further agree that the jurisdiction for any legal disputes arising out of this Contract shall be the Superior Court of the State of Arizona. The parties agree that even if this Contract does not specifically reference any provision required by state or federal law, those state and federally required provisions are incorporated into this Contract by this reference as though they were specifically listed herein.

**ARTICLE 14– TERM:** Contract shall be effective date signed by the County Manager and expires April 21, 2012.

**ARTICLE 15 – PAYMENT/BILLING:** Contractor shall be paid a flat fee of **$ 24,282.22** for completion of the projects as outlined in the Scope of Services.

All invoices shall be submitted to Gila County Accounts Payable, 1400 E. Ash St, Globe, Arizona and include the following information:

- Purchase Order Number
- Contract Number
- Invoice Number
- Service Location
- Vendor Name and Address
- Description of Service

Any alterations to the scope of work resulting in a change in cost must have prior written approval by the County. Any unauthorized work may result in non-payment to the vendor.

Gila County employs a "Net 15" payment term for services meaning the payment will be issued fifteen (15) days from the date the County receives the invoice from the Contractor. Purchase orders sent to the Contractor reflect these terms and conditions.

The Contractor shall have a current I.R.S. W-9 form on file with the County unless not required by law. The County shall not remit payment if the Contractor does not have a current W-9.

**IN WITNESS WHEREOF,** two (2) identical counterparts of **Contract No. 121311**, each which shall include original signatures and for all purposes be deemed an original thereof, have been duly executed by the parties hereinabove named, on the date and year first above written.

**GILA COUNTY**

**Don E. McDaniel Jr., County Manager**

**Date:** 12/21/11

**RODRIGUEZ CONSTRUCTION INC.**

**Signature**

ART RODRIGUEZ

**Print Name**

**Date:** 12-13-11

**APPROVED AS TO FORM**

**Bryan B. Chambers, Chief Deputy County Attorney**
**for Daisy Flores, County Attorney**

EXHIBIT "A"

# RODRIGUEZ CONSTRUCTIONS, INC.

547 SOUTH EAST STREET
GLOBE, ARIZONA 85501
Res. #ROC247371B / Comm. #ROC247372B-01
Res./Comm. #ROC247373K-42
Office - (928) 425-7244
Fax - (928) 425-5337
rodrigue-const@hotmail.com

November 21, 2011

TO: Gabe Eylicio
5515 South Apache Avenue
Globe, AZ 85501

RE: HH # 2865

Globe, AZ 85501

Rodriguez Constructions hereby proposes to submit an estimate to perform the following work:

- **Infiltration**
  - Will reduce whole house CFM by 2,700 to meet maximum BAS of 856 CFM/50.
  - Two new door seals will be installed.
  - Make laundry room an un-conditioned space by weather-proofing entry into kitchen.
  - Total Labor and Materials: $1,680.00
- **Shade Screens**
  - Four shade screens will be installed.
  - Two northwest, two southwest.
  - Total Labor and Materials: $260.00
- **Insulation**
  - Blow in fiberglass insulation in the attic to achieve an R-38 value.
  - Total Labor and Materials: $834.00
- **Water Heater**
  - Add combustion air (72 additional square inches)
  - Total Labor and Materials: $150.00

| | |
|---|---|
| Subtotal Total labor and materials: | $2924.00 |
| Administrative Fee | $100.00 |
| Sales tax 6.24% | $188.70 |
| **Total Contract amount:** | **$3,212.70** |

Respectfully Submitted,

**Art I. Rodriguez**

Art I. Rodriguez

**"A ROOF DONE RIGHT IS WATER TIGHT"**

EXHIBIT "B"

# RODRIGUEZ CONSTRUCTIONS, INC.

547 SOUTH EAST STREET
GLOBE, ARIZONA 85501
Res. #ROC247371B / Comm. #ROC247372B-01
Res./Comm. #ROC247373K-42
Office - (928) 425-7244
Fax - (928) 425-5337
rodriguezconst@hotmail.com

September 22, 2011

TO: County Housing – Weatherization Program
ATTN: Gabe Eylicio
5515 South Apache Avenue
Globe, AZ 85501

HH # 3124

RE:

Miami, AZ 85539

- **A/C Split System** – remove old furnace and replace with new two (2) ton 14 SEER A/C split system as specified to code. Neatly tie into existing duct work. Install new T-Stat and flue liner. Install the higher efficiency rated AFUE Energy Star for a manufactured home. The digital thermostat will be included along with any needed duct work, registers, and main disconnect to code.
  - A new split system will be sized to the home per ACCA Manual J, Residential Load.
  - Install and vent the unit per the manufacturer's instructions (PMI).
  - Electrical supply will be a dedicated circuit with a switch at the unit.
  - The unit will have a minimum 30" front clearance when installed. **NEED TO CHK ADEQUATE CLEARANCE IN HALLWAY**
  - The temp rise and match to unit will be checked (PMI).
  - Inspect ducts & seal any joints or other leaks in supply or return ducts. The duct system has leaks that will require repairs.
  - All provisions of this item must be met to warrant payment.

Total labor and materials: $6,950.00

- **A/C Window Units**: One (1) unit will be removed and opening will be sealed. Plexiglas will be installed and sealed at the window location.

Total labor and materials: $150.00

- **Stove**: This stove did pass CO test (weighs in @ 97 parts/mil). We will attempt to clean and adjust air intake. Possible replacement if PPM standards cannot be maintained.

Total labor and materials: $85.00

- **Windows:** There are six (6) broken windows that will be replaced with Plexiglas.

Total labor and materials: $360.00

- **Hot Water Heater**: The existing hot water heater cabinet needs to be sealed. T & P drain line need to be extended through the floor. A new B rated vent, collar and cap will be installed. A new gas flex line will be installed.

Total labor and materials: $950.00

- **Ceiling**: Extensive repairs to holes in ceiling in order to seal properly.

Total labor and materials: $400.00

- **Infiltration**: Building air flow standard will be met for whole house CFM.

Total labor and materials: $400.00

**"A ROOF DONE RIGHT IS WATER TIGHT"**

# RODRIGUEZ CONSTRUCTIONS, INC.

547 SOUTH EAST STREET
GLOBE, ARIZONA 85501
Res. #ROC247371B / Comm. #ROC247372B-01
Res./Comm. #ROC247373K-42
Office - (928) 425-7244
Fax - (928) 425-5337
rodriguezconst@hotmail.com

September 22, 2011



TO: County Housing – Weatherization Program
ATTN: Gabe Eylicio
5515 South Apache Avenue
Globe, AZ 85501

RE:

Miami, AZ 85539

**Sunscreens:** A total of seven (7) sunscreens to be installed on east and west sides of home.
Total labor and materials: $455.00

**Roof Leaks:** There are multiple roof leaks that will be sealed at no cost to the owner or to the county.
Total Labor and Materials $0.00

| | |
|---|---|
| SUBTOTAL CONTRACT AMOUNT: | $9750.00 |
| Administration Fee for processing Davis Bacon Wages forms | $100.00 |
| Subtotal | $9850.00 |
| 6.24% sales tax: | 614.64 |
| **Total contract amount:** | **$10,464.64** |

Respectfully Submitted,

/s/ Art I. Rodriguez

Art I. Rodriguez

EXHIBIT "C"

# RODRIGUEZ CONSTRUCTIONS, INC.

547 SOUTH EAST STREET
GLOBE, ARIZONA 85501
Res. #ROC247371B / Comm. #ROC247372B-01
Res./Comm. #ROC247373K-42
Office - (928) 425-7244
Fax - (928) 425-5337
rodriguezconst@hotmail.com

November 21, 2011

TO: Gila County Housing – Weatherization

ATTN: Gabe Eylicio
5515 S. Apache Avenue
Globe, AZ. 85501

RE: HH# 7365

Globe, AZ. 85501

- **A/C Split System**: Install new 60,000 BTU (Heating)/22,000 BTU (Cooling) 14. SEER A/C split system as specified to code (specs. to be determined by Manual-J). This unit will be 90% + efficient manufactured by RUUD. Neatly tie into existing duct work. Install new T-Stat and flue liner. Install the higher efficiency rated AFUE Energy Star for a manufactured home. The digital thermostat will be included along with any needed duct work, registers, and main disconnect to code. One (1) new return (filtered) will be installed.
  1) A new split system will be sized to the home per ACCA Manual J, Residential Load.
  2) Install and vent the unit per the manufacturer's instructions (PMI).
  3) Electrical supply will be a dedicated circuit with a switch at the unit.
  4) The unit will have a minimum 30" front clearance when installed.
  5) The temp rise and match to unit will be checked (PMI).
  6) Inspect ducts & seal any joints or other leaks in supply or return ducts. The duct system has leaks that will require repairs.
  - Total Labor and Materials $7,842.00
- **Evaporative Cooler**: One (1) evap cooler will be removed and opening will be sealed.
  - Total Labor and Materials $175.00
- **Infiltration**: All infiltration leaks will be corrected to bring to acceptable whole house CFM.
  - Total Labor and Materials $400.00
- **Sunscreens**: A total of six (6) sunscreens to be installed – one (1) on west and four (4) on south side of home.
  - Total Labor and Materials $390.00
- **Faucet Replacement:** Replace faucet due to continuous water leak from hot side.
  - Total Labor and Materials $150.00
- **Door Seal:** Rear door will receive new door seal.
  - Total Labor and Materials $125.00
- **Stove**
  - Replace the existing stove with a self-cleaning sealed burner.
  - Total Labor and Materials: $800.00

**"A ROOF DONE RIGHT IS WATER TIGHT"**

| | |
|---|---|
| Subtotal Total labor and materials: | $9,882.00 |
| Administrative Fee | $100.00 |
| Sales tax 6.24% | $622.88 |
| **Total Contract amount:** | **$10,604.88** |

Respectfully Submitted,

# Art I. Rodriguez

Art I. Rodriguez

**"A ROOF DONE RIGHT IS WATER TIGHT"**

**Tommie C. Martin, District I**
P.O. Box 2297 Payson, AZ. 85547
(928) 474-2029

**Michael A. Pastor, District II**
1400 E. Ash St. Globe, AZ. 85501
(928) 425-3231 Ext. 8753

**Shirley L. Dawson, District III**
1400 E. Ash St. Globe, AZ. 85501
(928) 425-3231 Ext. 8511

**GILA COUNTY**
www.gilacountyaz.gov

**Don E. McDaniel Jr., County Manager**
Phone (928) 425-3231 Ext.8761

**Joseph T. Heatherly, Finance Director**
Phone (928) 425-3231 Ext. 8743

FAX (928) 425-0319
TTY: 7-1-1

**SERVICE AGREEMENT NO. 121411**

**WEATHERIZATION PROJECT NO. HH #8336, #4295**

**THIS AGREEMENT,** made and entered into this 21st day of December, **2011**, by and between the Gila County Board of Supervisors, a political subdivision of the State of Arizona, hereinafter designated the County, and **Rodriguez Construction Inc.**, of the City of Globe, State of Arizona, hereinafter designated the Contractor.

**WITNESSETH:** The Contractor, for and in consideration of the sum to be paid him by the County, in the manner and at the time hereinafter provided, and of the other covenants and agreement's herein contained, hereby agrees, for himself, his heirs, administrators, successors, and assigns as follows:

**ARTICLE 1 – SCOPE OF SERVICES:** The Contractor shall provide for the complete provision in the scope of work below of Weatherization Projects 8336 and 4295, in a good and workmanlike and substantial manner and to the satisfaction of the County under the direction of the Housing Services Manager or designee.

All work performed by the Contractor shall be completed to local codes and regulation per Gila County and the State of Arizona and consistent with all Weatherization guidelines.

Scope of Work: Refer to attached Exhibits A and B. By mention the exhibits are made a binding part of this agreement as set forth herein.
Exhibit "A" HH# 8336, Exhibit "B" HH# 4295

Contractor Fee's: Refer to Exhibits "A & B"

**ARTICLE 2 – TERMINATION:** The County reserves the right to terminate the Contract, in whole or in part at any time, when in the best interest of the County, without penalty or recourse. Upon receipt of the written notice, the Contractor shall stop all work as directed in the notice. If the contract is terminated, the County shall be liable only for the services rendered under this contract and accepted material received by the County before the effective date of termination.

**ARTICLE 3 - INDEMNIFICATION:** Contractor shall indemnify, defend, save and hold harmless the County of Gila and its officers, officials, agents, and employees (hereinafter referred to as "Indemnitee") from and against any and all claims, actions, liabilities, damages, losses, or expenses (including court costs, attorneys' fees, and costs of claim processing, investigation and litigation) (hereinafter referred to as "Claims") for bodily injury or personal injury (including death), or loss or damage to tangible or intangible property caused, or alleged to be caused, in whole or in part, by the negligent or willful acts or omissions of Contractor or any of its owners, officers, directors, agents, employees or subcontractors. This indemnity includes any claim or amount arising out of or recovered under the Workers' Compensation Law or arising out of the failure of such contractor to conform to any federal, state or local law, statute, ordinance, rule, regulation or court decree. It is the specific intention of the parties that the Indemnitee shall, in all instances, except for Claims arising solely from the negligent or willful acts or omissions of the Indemnitee, be indemnified by Contractor from and against any and all claims. It is agreed that Contractor will be responsible for primary loss investigation, defense and judgment costs where this indemnification is applicable. In consideration of the award of this contract, the Contractor agrees to waive all rights of subrogation against the County, its officers, officials, agents and employees for losses arising from the work performed by the Contractor for the County.

**ARTICLE 4 – INSURANCE REQUIREMENTS:** Contractor and subcontractors shall procure and maintain until all of their obligations have been discharged, including any warranty periods under this Contract are satisfied, insurance against claims for injury to persons or damage to property which may arise from or in connection with the performance of the work hereunder by the Contractor, his agents, representatives, employees or subcontractors.

The insurance requirements herein are minimum requirements for this Contract and in no way limit the indemnity covenants contained in this Contract. The County in no way warrants that the minimum limits contained herein are sufficient to protect the Contractor from liabilities that might arise out of the performance of the work under this contract by the Contractor, his agents, representatives, employees or subcontractors and Contractor is free to purchase additional insurance as may be determined necessary.

A. **MINIMUM SCOPE AND LIMITS OF INSURANCE:** Contractor shall provide coverage with limits of liability not less than those stated below.

1. **Commercial General Liability – Occurrence Form**
   Policy shall include bodily injury, property damage and broad form contractual liability coverage.
   - General Aggregate $2,000,000
   - Products – Completed Operations Aggregate $1,000,000
   - Personal and Advertising Injury $1,000,000
   - Each Occurrence $1,000,000

   a. The policy shall be endorsed to include the following additional insured language: **"The County of Gila shall be named as an additional insured with respect to liability arising out of the activities performed by, or on behalf of the Contractor".**

2. **Worker's Compensation and Employers' Liability**

| | |
|---|---|
| Workers' Compensation | Statutory |
| Employers' Liability | |
| Each Accident | $100,000 |
| Disease – Each Employee | $100,000 |
| Disease – Policy Limit | $500,000 |

   a. Policy shall contain a **waiver of subrogation** against the County of Gila.

3. **Professional Liability (Errors and Omissions Liability)**

| | |
|---|---|
| Each Claim | $1,000,000 |
| Annual Aggregate | $2,000,000 |

a. In the event that the professional liability insurance required by this Contract is written on a claims-made basis, Contractor warrants that any retroactive date under the policy shall precede the effective date of this Contract; and that either continuous coverage will be maintained or an extended discovery period will be exercised for a period of two (2) years beginning at the time work under this Contract is completed.

B. **ADDITIONAL INSURANCE REQUIREMENTS:** The policies shall include, or be endorsed to include, the following provisions:

1. On insurance policies where the County of Gila is named as an additional insured, the County of Gila shall be an additional insured to the full limits of liability purchased by the Contractor even if those limits of liability are in excess of those required by this Contract.
2 The Contractor's insurance coverage shall be primary insurance and non-contributory with respect to all other available sources.
3. Coverage provided by the Contractor shall not be limited to the liability assumed under the indemnification provisions of this Contract.

C. **NOTICE OF CANCELLATION:** Each insurance policy required by the insurance provisions of this Contract shall provide the required coverage and shall not be suspended, voided, canceled, reduced in coverage or endorsed to lower limits except after thirty (30) days prior written notice has been given to the County. Such notice shall be sent directly to **Gila County Purchasing Department, 1400 E. Ash St., Globe, AZ, 85501** and shall be sent by certified mail, return receipt requested.

D. **ACCEPTABILITY OF INSURERS:** Insurance is to be placed with insurers duly licensed or approved unlicensed companies in the state of Arizona and with an "A.M. Best" rating of not less than B+ VI. The County in no way warrants that the above-required minimum insurer rating is sufficient to protect the Contractor from potential insurer insolvency.

E. **VERIFICATION OF COVERAGE:** Contractor shall furnish the County with certificates of insurance (ACORD form or equivalent approved by the County) as required by this Contract. The certificates for each insurance policy are to be signed by a person authorized by that insurer to bind coverage on its behalf.

***All certificates and endorsements are to be received and approved by the County before work commences.*** Each insurance policy required by this Contract must be in effect at or prior to commencement of work under this Contract and remain in effect for the duration of the project. Failure to maintain the insurance policies as required by this Contract or to provide evidence of renewal is a material breach of contract.

All certificates required by this Contract shall be sent directly to **Gila County Purchasing Department, 1400 E. Ash St., Globe, AZ, 85501.** The County project/contract number and project description shall be noted on the certificate of insurance. The County reserves the right to require complete, certified copies of all insurance policies required by this Contract at any time.

F. **SUBCONTRACTORS:** Contractors' certificate(s) shall include all subcontractors as additional insured's under its policies or Contractor shall furnish to the County separate certificates and endorsements for each subcontractor. All coverage's for subcontractors shall be subject to the minimum requirements identified above.

G. **APPROVAL:** Any modification or variation from the insurance requirements in this Contract shall be made by the County Attorney, whose decision shall be final. Such action will not require a formal Contract amendment, but may be made by administrative action.

**ARTICLE 5 – LEGAL ARIZONA WORKERS ACT COMPLIANCE:** Contractor hereby warrants that it will at all times during the term of this Contract comply with all federal immigration laws applicable to Contractor's employment of its employees, and with the requirements of A.R.S. § 23-214 (A) (together the "State and Federal Immigration Laws"). Contractor shall further ensure that each subcontractor who performs any work for Contractor under this contract likewise complies with the State and Federal Immigration Laws. County shall have the right at any time to inspect the books and records of Contractor and any subcontractor in order to verify such party's compliance with the State and Federal Immigration Laws.

Any breach of Contractor's or any subcontractor's warranty of compliance with the State and Federal Immigration Laws, or of any other provision of this section, shall be deemed to be a material breach of this Contract subjecting Contractor to penalties up to and including suspension or termination of this Contract. If the breach is by a subcontractor, and the subcontract is suspended or terminated as a result, Contractor shall be required to take such steps as may be necessary to either self-perform the services that would have been provided under the subcontract or retain a replacement subcontractor as soon as possible so as not to delay project completion.

Contractor shall advise each subcontractor of County's rights, and the subcontractor's obligations, under this Article by including a provision in each subcontract substantially in the following form: "Subcontractor hereby warrants that it will at all times during the term of this contract comply with all federal immigration laws applicable to Subcontractor's employees, and with the requirements of A.R.S. § 23-214 (A). Subcontractor further agrees that County may inspect the Subcontractor's books and records to insure that Subcontractor is in compliance with these requirements. Any breach of this paragraph by Subcontractor will be deemed to be a material breach of this contract subjecting Subcontractor to penalties up to and including suspension or termination of this contract."

Any additional costs attributable directly or indirectly to remedial action under this Article shall be the responsibility of Contractor. In the event that remedial action under this Article results in delay to one or more tasks on the critical path of Contractor's approved construction or critical milestones schedule, such period of delay shall be deemed excusable delay for which Contractor shall be entitled to an extension of time, but not costs.

**ARTICLE 6 – LAWS AND ORDINANCES:** This agreement shall be enforced under the laws of the State of Arizona. Contractor shall maintain in current status all Federal, State and Local licenses and permits required for the operation of the business conducted by the Contractor. The Contractor shall comply with the applicable provisions of the Americans with Disabilities Act (Public Law 101-336, 42 U.S.C. 12101-12213) and applicable federal regulations under the Act.

**ARTICLE 7– ANTI-TERRORISM WARRANTY:** Pursuant to A.R.S. § 35-393.06(B) and 35-301.06(A) the Contractor certifies that it does not have scrutinized business operations in Iran or Sudan and that they are in compliance with the Export Administration Act and not on the Excluded Parties List.

**ARTICLE 8 – CANCELLATION:** This agreement is subject to cancellation pursuant to A.R.S. §38-511. If the Agreement is terminated, the county shall be liable only for payment for services rendered and accepted material received by the County before the effective date of termination.

**ARTICLE 9 – RELATIONSHIP OF THE PARTIES:** Contractor is an independent contractor of the County. Contractor represents that he has or will secure, at his own expense, all personnel required in performing the services under this contract. Such personnel shall not be employees of or have any contractual relationship with the County. All personnel engaged in work under this contract shall be fully qualified and shall be authorized or permitted under State and local law to perform such services. Contractor warrants that he has obtained or will obtain Worker's Compensation Insurance for his employees working on this contract and that any subcontractors will likewise obtain Worker's Compensation Insurance for of their employees working on this contract. It is further agreed by Contractor that he shall obey all state and federal statutes, rules, and regulations which are applicable to provisions of the services called for herein. Neither Contractor nor any employee of the Contractor shall be deemed an officer, employee, or agent of the County.

**ARTICLE 10 – NON-APPROPRIATIONS CLAUSE:** Contractor acknowledges that the County is a governmental entity, and the contract validity is based upon the availability of public funding under its authority. In the event that public funds are unavailable and not appropriated for the performance of County's obligations under this contract, then this contract shall automatically expire without penalty to County after written notice to Contractor of the unavailability and non-appropriation of public funds. It is expressly agreed that the County shall only activate this non-appropriation provision as an emergency fiscal measure. The County shall not activate this non-appropriation provision for its convenience, to circumvent the requirements of this contract, or to enable the County to contract with another Contractor for the same supplies or services covered under this Addendum.

**ARTICLE 11 – ENTIRE CONTRACT CLAUSE:** The Contractor and the County have read this Contract and agree to be bound by all of its terms, and further agree that it constitutes the entire contract between the two parties and may only be modified by a written mutual contract signed by the parties. No oral agreement or oral provision outside this Contract shall have any force or effect.

**ARTICLE 12 – NON-WAIVER OF ENFORCEABILITY:** Failure of the County to enforce, at any time, any of the provisions of this Contract, or to request at any time performance by Contractor of any of the provisions hereof, shall in no way be construed to be a waiver of such provisions, nor in any way affect the validity of this contract or any part thereof, or the right of the County to enforce each and every provision

**ARTICLE 13 – GOVERNING LAW:** Both parties agree that this Contract shall be governed by the laws of the state of Arizona. The parties further agree that the jurisdiction for any legal disputes arising out of this Contract shall be the Superior Court of the State of Arizona. The parties agree that even if this Contract does not specifically reference any provision required by state or federal law, those state and federally required provisions are incorporated into this Contract by this reference as though they were specifically listed herein.

**ARTICLE 14– TERM:** Contract shall be effective date signed by the County Manager and expires April 21, 2012.

**ARTICLE 15 – PAYMENT/BILLING:** Contractor shall be paid a flat fee of **$ 22,276.23** for completion of the projects as outlined in the Scope of Services.

All invoices shall be submitted to Gila County Accounts Payable, 1400 E. Ash St, Globe, Arizona and include the following information:

- Purchase Order Number
- Contract Number
- Invoice Number
- Service Location
- Vendor Name and Address
- Description of Service

Any alterations to the scope of work resulting in a change in cost must have prior written approval by the County. Any unauthorized work may result in non-payment to the vendor.

Gila County employs a "Net 15" payment term for services meaning the payment will be issued fifteen (15) days from the date the County receives the invoice from the Contractor. Purchase orders sent to the Contractor reflect these terms and conditions.

The Contractor shall have a current I.R.S. W-9 form on file with the County unless not required by law. The County shall not remit payment if the Contractor does not have a current W-9.

**IN WITNESS WHEREOF,** two (2) identical counterparts of **Contract No. 121411**, each which shall include original signatures and for all purposes be deemed an original thereof, have been duly executed by the parties hereinabove named, on the date and year first above written.

**GILA COUNTY**

**Don E. McDaniel Jr., County Manager**

**Date:** 12/21/11

**RODRIGUEZ CONSTRUCTION INC.**

**Signature**

ART RODRIGUEZ

**Print Name**

**Date:** 12-13-11

**APPROVED AS TO FORM**

**Bryan B. Chambers, Chief Deputy County Attorney**
**for Daisy Flores, County Attorney**

EXHIBIT 'A'

# RODRIGUEZ CONSTRUCTIONS, INC.

547 SOUTH EAST STREET
GLOBE, ARIZONA 85501
Res. #ROC247371B / Comm. #ROC247372B-01
Res./Comm. #ROC247373K-42
Office - (928) 425-7244
Fax - (928) 425-5337
rodriguezconstr@hotmail.com

October 5, 2011

TO: Gila County Community Services
ATTN: Gabe Eylicio
5515 South Apache Avenue
Globe, AZ 85501

RE: HH# 8336

Globe AZ 85501

Rodriguez Constructions, Inc. hereby proposes to submit a scope of work for the above-referenced job.

**A/C Split System** – Remove old furnace and replace with new two and half (2.5) ton 14 SEER A/C split system as specified to code. Neatly tie into existing duct work. Install new T-Stat and flue liner. Install the higher efficiency rated AFUE Energy Star for a manufactured home. The digital thermostat will be included along with any needed duct work, registers, and main disconnect to code. Duct sealing is included in this bid, duct replacement is not.

1) A new split system will be sized to the home per ACCA Manual J, Residential Load.
2) Install and vent the unit per the manufacturer's instructions (PMI).
3) Electrical supply will be a dedicated circuit with a switch at the unit.
4) The unit will have a minimum 30" front clearance when installed.
5) The temp rise and match to unit will be checked (PMI).
6) Inspect ducts & seal any joints or other leaks in supply or return ducts. The filter box will receive a cover.
7) All provisions of this item must be met to warrant payment

Total labor and materials: $6,950.00

- **Water Heater**: This water heater will be removed and the cabinet space will be sealed. After repairs, existing water heater will be installed. New vent, collar, jack and cap will be included. In addition new gas flex will be installed.

Total labor and materials: $750.00

- **Insulation**: The ceiling (960 sq ft) will be insulated to achieve an R-38.

Total labor and materials: $720.00

- **Infiltration**: There are two (2) doors that will be sealed to prevent infiltration. In addition the evaporative cooler on roof will be removed, and eight (8) ceiling registers will be sealed with insulation and FRP enclosure. In addition a section of the ceiling that measures 36 sq ft will be repaired with ½ " drywall, to receive flat tape for finish.

Total labor and materials: $1,180.00

**"A ROOF DONE RIGHT IS WATER TIGHT"**

# RODRIGUEZ CONSTRUCTIONS, INC.

547 SOUTH EAST STREET
GLOBE, ARIZONA 85501
Res. #ROC247371B / Comm. #ROC247372B-01
Res./Comm. #ROC247373K-42
Office - (928) 425-7244
Fax - (928) 425-5337
rodriguezconst@hotmail.com

October 5, 2011



TO: Gila County Community Services
ATTN: Gabe Eylicio
5515 South Apache Avenue
Globe, AZ 85501

RE:

Globe AZ 85501

- **Shade Screens**: Six (6) total shade screens. Three (3) on south and three (3) on west will be installed.
  Total labor and materials: $390.00

| | |
|---|---|
| Total labor and materials: | $9,990.00 |
| Administrative Fee: | $100.00 |
| Sales tax 6.24%: | $629.62 |
| **Total Contract amount:** | **$10,719.62** |

Respectfully Submitted,

/s/ Art I. Rodriguez

Art I. Rodriguez

**"A ROOF DONE RIGHT IS WATER TIGHT"**

EXHIBIT "B"

# RODRIGUEZ CONSTRUCTIONS, INC.

547 SOUTH EAST STREET
GLOBE, ARIZONA 85501
Res. #ROC247371B / Comm. #ROC247372B-01
Res./Comm. #ROC247373K-42
Office - (928) 425-7244
Fax - (928) 425-5337
rodriguezconst@hotmail.com

November 15, 2011

TO: Gila County Housing
ATTN: Gabe Eylicio
5515 S. Apache Ave. Suite 200
Globe, AZ 85501

RE: - HH# 4295

Miami AZ 85539

Rodriguez Constructions, Inc. hereby proposes to submit a scope of work for the above-referenced job.

- **A/C System** – A 14 SEER A/C split system with a 90+% AFUE furnace will be installed. One (1) new 230V electrical circuit will be ran from SEP to service disconnect. A new return system will have to be fabricated. Installation will include new digital thermostat. Rodriguez will remove evaporative cooler and A/C window unit.
  1) A new gas pack will be sized to the home per ACCA Manual J, Residential Load.
  2) Install and vent the unit per the manufacturer's instructions (PMI).
  3) Electrical supply will be a dedicated circuit with a switch at the unit.
  4) The temp rise and match to unit will be checked (PMI).
  5) All provisions of this item must be met to warrant payment.
  6) Reduce room pressures in bedrooms
  7) All rusted diffusers will be replaced.

Total labor and materials: $7,450.00

- **Shade Screens:** Install five (5) shade screens on the south side

Total labor and materials: $325.00

- **Insulation-Attic:** The ceiling (1783 sq ft) will be insulated to raise the R-value to an R-38. Also an attic access cover will be built to cover opening.

Total labor and materials: $1,337.25

- **Infiltration:** Shell Sealing to reduce infiltration by 3,000 CFM

Total labor and materials: $400.00

- **Water Heater**: Replace water heater with a new 40 gal to include flu, jack, cap, relief line, Gas line and flex line. **Water heater to be provided by Gila County Housing Dept**

Total labor and materials: $750.00

- **Door Seals:** All three doors to receive new door seals.

Total labor and materials: $300.00

**"A ROOF DONE RIGHT IS WATER TIGHT"**

RODRIGUEZ CONSTRUCTIONS, INC.

547 SOUTH EAST STREET
GLOBE, ARIZONA 85501
Res. #ROC247371B / Comm. #ROC247372B-01
Res./Comm. #ROC247373K-42
Office - (928) 425-7244
Fax - (928) 425-5337
rodriguezconst@hotmail.com

November 15, 2011



TO: Gila County Housing
ATTN: Gabe Eylicio
5515 S. Apache Ave. Suite 200
Globe, AZ 85501

RE: - HH# 4295

Miami AZ 85539

- **Ceiling Repair:** Presently there are missing ceiling tiles that we will not be able to match up with the existing tiles. But we will replace missing tiles with other tiles of another pattern.

Total labor and materials: $225.00

| | |
|---|---|
| Total labor and materials: | $10,787.25 |
| Administrative Fee: | $100.00 |
| Sales tax 6.24%: | $679.36 |
| **Total Contract amount:** | **$11,566.61** |

Respectfully Submitted,

Art I. Rodriguez

Art I. Rodriguez

**"A ROOF DONE RIGHT IS WATER TIGHT"**

KONICA MINOLTA

Mohave Educational Services Cooperative Contract 10i-KMBS-0127

## Master Purchase Agreement

Check Applicable Box ☑ Purchase ☐ Lease ☐ Other: _____

| INVOICE TO | Account # | SOLD TO | Account # | SHIP TO | Account # |
|---|---|---|---|---|---|
| Legal Name | Gila County Assessor Office | Legal Name | Gila County Assessor's Office | Legal Name | Gila County Assessor's Office |
| Attn Line 1 | Accounts Payable | Attn Line 1 | Dale Hom / Hazel Dillon | Attn Line 1 | Hazel Dillon |
| Attn Line 2 | Sylvia Martinez | Attn Line 2 | (928) 402-8711 | Attn Line 2 | (928) 402-8711 |
| Street Address | 1400 East Ash Street | Street Address | 1400 East Ash Street | Street Address | 1400 East Ash Street |
| City Globe | State AZ Zip 85501 | City Globe | State AZ Zip 85501 | City Globe | State AZ Zip 85501 |

Tax Exempt ☑ No ☐ Yes (Copy Required) Tax Exempt # _____

P.O. Required ☐ No ☑ Yes (Copy Required) P.O. # _____ P.O. Expiration Date _____

Payment Terms: Net 30 Days

Credit Card: Card Type _____ Name on Card _____ Authorized Credit Card Amount: _____ (plus applicable taxes) Credit Card # _____ Expiration Date _____

Check: Amount _____ Check # _____

Requested Delivery Date: 12/29/2011

Maintenance Contract ☑ Accepted ☐ Declined

| QTY | MATERIAL # | MATERIAL DESCRIPTION | SERIAL NUMBER | PRICE EACH | EXTENDED |
|---|---|---|---|---|---|
| | | MESC Contract # 10i-KMBS-0127 | | | |
| 1 | A1DM011 | bizhub C-652DS Dual Scan | | $ 6,053.00 | $ 6,053.00 |
| 1 | A0HRWY2 | FS-527 Finisher (50 sheet) | | $ 583.00 | $ 583.00 |
| 1 | A0W4WY1 | WT-506 Working Table | | $ 28.00 | $ 28.00 |
| 1 | 7640001107 | D5143NT Power Filter (120 volt, 20 Amps,) | | $ 79.00 | $ 79.00 |
| 1 | 14YK | Staples for the FS-527 (3 X 5000) | | | $ - |

| QTY | MATERIAL # | SUPPLY - MATERIAL DESCRIPTION | | PRICE EACH | EXTENDED |
|---|---|---|---|---|---|
| 1 | AOTM130 | TN-613K Black Toner | N/A | | |
| 1 | AOTM430 | TN-613C Cyan Toner | N/A | | |
| 1 | AOTM330 | TN-613M Magenta Toner | N/A | | |
| 1 | AOTM230 | TN-613Y Yellow Toner | N/A | | |
| | | DELIVERY CHARGE | N/A | | |
| | | INSTALLATION CHARGE | N/A | | |

Additional Charges:

☐ Network _____ ☐ Removal _____ ☐ Other _____

Additional Charges _____

TOTAL $ 6,743.00

(TOTAL is exclusive of applicable taxes)

Pick-Up Requested Removal Date:

| QTY | MATERIAL # | MATERIAL DESCRIPTION | SERIAL NUMBER |
|---|---|---|---|
| | | | |

Comments

*This agreement incorporates Schedule A KMBS Modified Sales Terms and Conditions for Mohave Educational Services Cooperative (MESC), a copy of which is available upon request. If payment by credit card is indicated above, Customer hereby grants KMBS the authority to charge the Customer's credit card in the amount indicated (plus applicable taxes). KMBS assumes no responsibility to pick-up, return to any party, and/or resolve any financial obligations on any existing Customer equipment except as specifically stated in this Agreement or separately executed form. Not binding on KMBS until signed by KMBS Manager.*

Customer Name Don E. McDaniel (Please Print)

Signature [signature] 12/21/11 (Authorized Representative of Customer) Date

Title County Manager

KMBS Representative [signature] 12/19/2011 Date

KMBS Manager [signature] 12/19/2011 Date

## INTERNAL KMBS USE ONLY

### CONTACT INFORMATION

| Pre-Call / Confirmation Contact | Phone | E-Mail Address | |
|---|---|---|---|
| Hazel Dillon | (928) 402-8711 | hdillon@co.gila.az.us | |
| **Primary Delivery Contact** | **Phone** | **Alternate Delivery Contact** | **Phone** |
| Hazel Dillon | (928) 402-8711 | Cassandra Villegas | (928) 402-4355 |
| **Accounts Payable Contact** | **Phone** | **E-Mail Address** | |
| Sylvia Martinez | (928) 402-8626 | smartinez@co.gila.az.us | |
| **Meter Contact** | **Phone** | **E-Mail Address (Meters)** | **Fax Number (Meters)** |
| Hazel Dillon | (928) 402-8711 | hdillon@co.gila.az.us | |

| Sales Rep | Sales Rep # | Split % | Phone | Sales Rep Name (Please Print) |
|---|---|---|---|---|
| Originating / Lead | 9415280 | 50% | (602) 531-2910 | Jay W. Douglas |
| Order Taking / Selling | 9415280 | 25% | (602) 531-2910 | Jay W. Douglas |
| Servicing / Installing | 9415280 | 25% | (602) 531-2910 | Jay W. Douglas |
| Sales District # | 94109 | 100% | **Split % Approval (unless over-ridden by Master Agreement):** | |

### ADDITIONAL ORDER INFORMATION

**Customer Type**

☑ State Government ☑ Federal Government ☐ Key Account ☐ National ☐ Print for Pay ☐ OPS ☐ Other ☐ Commercial/Local (Branch)

**Deduction(s):**

☐ Lease Reimb/Rebate (ZLEA): _____ ☐ Service (ZSVC) _____ ☐ Shipping (ZADY) _____ ☐ Other (ZMOT) _____ Describe:

**Additional Documents & Attachments:**

☐ Buyout Quote/Letter
☐ Check (Copy)
☐ Credit Application
☑ Contingency Demo Acknowledgement
☐ DNA w/ vCare #: _____ If checked indicate #
☑ Equipment Removal Authorization
☐ Lease Document with Approval
☐ Lease Reimbursement/Rebate
☐ Price Exception
☑ Purchase Order
☐ Tax Exempt Certificate
☐ Other _____ Describe

**Delivery** ☐ **Pick-Up (See Pg 1)** ☐ **No Movement** ☐ **Dealer Install** ☐ **New Customer** ☐ → **CRM Row ID#** _____ -

**Object Type:** _____ **Date/Time Submitted to Admin:** _____ - _____

**Lease #:** **Date Document Sent to Lease Company:**

### AGREEMENT INFORMATION

| | | | | | |
|---|---|---|---|---|---|
| | | | | **Customer Code 1** | Mohave Educational Services Cooperative |
| **PE #** | 0825104-R072711 | **Agreement** | 10i-KMBS-0127 | **Customer Code 2** | Master Agreement 40038415 |
| **Promotion #** | | **Subfleet / Price Plan** | / | **Customer Code 3** | |

### COMMENTS & SPECIAL INSTRUCTIONS

### PRE-CALL / CONFIRMATION INFORMATION

SPOKE WITH: _____ DATE: _____ TIME: _____

☐ Confirmed Ship To Address ☐ Confirmed Delivery Contact ☐ Confirmed Alternate Contact ☐ Confirmed Telephone #

Delivery Entrance ☐ Yes ☐ No ☐ Front ☐ Back ☐ Side

Is Site Ready ☐ Yes ☐ No If No, When _____

Delivery Hours _____ AM to _____ PM ☐ Mon ☐ Tues ☐ Wed ☐ Thurs ☐ Fri

Loading Dock ☐ Yes ☐ No Elevator ☐ Yes ☐ No Equipment Pick-up required ☐ Yes ☐ No

Stairs ☐ Yes ☐ No If yes, how many Turns or Landings ☐ Yes ☐ No If yes, how many

Special requirements (i.e. certificate of insurance, security check, customer comments, etc)

If unable to reach the customer, list date/time attempted 1st call: 2nd call: 3rd call:

| | |
|---|---|
| **Intermediate Consignee** _____ | KIT # _____ |
| Order Package Edited By: _____ Date: _____ | Credit Approval: _____ Date: _____ |

| | | | |
|---|---|---|---|
| *SALES ORDER #* | *3rd Party Order #* | *PICK-UP ORDER #* | *SUPPLY ORDER #* |
| *DELIVERY DOC #* | *PO#* | *DELIVERY DOC #* | *DELIVERY DOC #* |

KONICA MINOLTA

# SCHEDULE A
# KMBS MODIFIED SALES TERMS AND CONDITIONS
# for MOHAVE EDUCATIONAL SERVICES COOPERATIVE (MESC)

**The following terms and conditions shall apply should the Customer elect to purchase equipment outright:**

1. **PAYMENT:** Payment is due within thirty (30) days from the date of the invoice. Should the customer fail to make any payment due hereunder, or be or become insolvent or be a party to or acquiesce in any bankruptcy or receivership proceeding or any similar action affecting the affairs or property of Customer, or violate any aspect of this Agreement, Konica Minolta Business Solutions U.S.A., Inc. ("KMBS") may refuse to provide warranty service for the equipment and may enter Customer's premises to recover any property or equipment owned by KMBS. Customer specifically grants its permission to KMBS to enter its property for this purpose. Title to equipment referenced on the reverse side of this Agreement shall pass to Customer upon delivery to Customer's location unless equipment is provided on a rental basis. Title to equipment provided on a rental basis shall remain with KMBS. Customer agrees to the filing of any liens, and/or UCC security Agreements (including UCC-1) to acknowledge the financial interest of KMBS in the equipment which is the subject of this Agreement until full payment is made. Reasonable costs, including counsel fees, shall be recoverable by KMBS in the event collection activities, including litigation, are required to collect outstanding amounts due under this Agreement. NO CASH PAYMENTS ACCEPTED. Accepted manners of payment are by major credit card or checks made payable to KMBS.

2. **SITE PREPARATION:** Customer shall ensure that equipment is placed in an environment that conforms with the manufacturer's specifications and requirements and will bear all cost and expense for any additional necessities required for installation such as telephone and electrical wiring, remodeling, and noise and power filters. Any electrical work external to the equipment (i.e. associated peripheral equipment, power, transmission and phone lines, and modems) and equipment line cord is not covered by this Agreement. Once the equipment is delivered, risk of loss lies with the Customer.

3. **WARRANTY:** ALL WARRANTIES, EXPRESS OR IMPLIED, INCLUDING ANY IMPLIED WARRANTIES OF MERCHANTABILITY OR FITNESS FOR PARTICULAR USE OR PURPOSE ARE HEREBY DISCLAIMED BY KMBS AND WAIVED BY CUSTOMER.

4. **LIMITATIONS ON RECOVERY:** The equipment may not be returned to KMBS without KMBS' written consent. CUSTOMER'S EXCLUSIVE REMEDY FOR BREACH OF WARRANTY SHALL BE REPAIR OF THE EQUIPMENT OR REPLACEMENT OF A NONCONFORMING PART, AT THE OPTION OF KMBS. THE PARTIES WAIVE THEIR RESPECTIVE RIGHTS TO SPECIAL, CONSEQUENTIAL, EXEMPLARY, INCIDENTAL OR PUNITIVE DAMAGES FOR ANY PROVEN BREACH OF THIS AGREEMENT (INCLUDING WARRANTY). KMBS SHALL ALSO NOT BE LIABLE FOR ANY DAMAGES, INCLUDING BUT NOT LIMITED TO, DAMAGES DUE TO LOSS OF DATA OR INFORMATION OF ANY KIND, LOSS OF OR DAMAGE TO REVENUE, PROFITS OR GOODWILL, DAMAGES DUE TO ANY INTERRUPTION OF BUSINESS, DAMAGE TO CUSTOMER'S COMPUTERS OR NETWORKS, EVEN IF KMBS HAS BEEN ADVISED OF THE POSSIBILITY OF SUCH DAMAGES.

KONICA MINOLTA

## SCHEDULE A
## KMBS MODIFIED SALES TERMS AND CONDITIONS
## for MOHAVE EDUCATIONAL SERVICES COOPERATIVE (MESC)

5. **APPLICABLE LAW:** This Agreement shall be governed by the laws of the State of Arizona without regard to choice of law principles. In the event of litigation or other proceedings by KMBS to enforce or defend any term or provision of this Agreement, Customer agrees to pay all costs and expenses sustained by KMBS, including but not limited to, reasonable attorney's fees. Customer further agrees to litigate any dispute concerning this matter in the courts of the state of Arizona consents to jurisdiction in that forum.

6. **FORCE MAJEURE:** Neither party shall be responsible for delays or failure in performance of this Agreement (other than failure to make payment) to the extent that such party was hindered in its performance by any act of God, civil commotion, labor dispute, or any other occurrence beyond its reasonable control.

7. **SEVERABILITY**: If any provision of this Agreement shall be unlawful, void or for any reason unenforceable, then that provision shall be deemed severable from this Agreement and shall not affect the validity and enforceability of the remaining provisions of this Agreement.

8. **WAIVER:** Failure by KMBS to enforce any provisions of this Agreement or any rights hereunder, or failure to exercise any election provided for herein, shall in no way be considered a waiver of such provisions, rights, or elections, or in any way affect KMBS' right to later enforce or exercise the same or other provisions, rights, or elections it may have under this Agreement.

9. **BUSINESS PURPOSE:** Customer warrants and represents that the equipment will be used for business purposes, and not for personal, family, household purposes or other uses deemed illegal or infringing on the copyrights of others.

10. **INDEMNIFICATION:** Customer shall bear all risk of theft, loss or damage to all equipment delivered under this Agreement, which is not caused by KMBS employees or agents. Customer agrees to indemnify, defend and hold harmless KMBS, its officers, directors, employees and agents from all loss, liability, claims or expenses (including reasonable attorney's fees) arising out of Customer's use of the equipment, including but not limited to liabilities arising from illegal use of KMBS equipment as well as bodily injury, including death, or property damage to any person, unless said injuries, death or property damage was caused solely as the result of a negligent or intentional act or omission by KMBS.

11. **ASSIGNMENT**: Customer may not assign this Agreement, without KMBS' express written consent. In the event that KMBS assigns or subcontracts any of its obligations under this Agreement, KMBS shall remain primarily responsible to perform those obligations. Any claim or defense Customer may have relating to those obligations must be asserted only against KMBS and not its assignee. KMBS may assign, without notice to Customer, any of its rights under this Agreement.

KONICA MINOLTA

## SCHEDULE A
## KMBS MODIFIED SALES TERMS AND CONDITIONS
## for MOHAVE EDUCATIONAL SERVICES COOPERATIVE (MESC)

12. **NOTICES:** All notices required to be given under this Agreement shall be in writing and shall be sent by U.S. first class mail to the parties as follows: To Customer at the address listed on the front of this Agreement and to KMBS, at 100 Williams Drive, Ramsey, NJ 07446, Attention: Office of Direct Administration.

13. **ORIGINAL DOCUMENT**: Customer further agrees (a) that facsimile or electronic signatures shall be accepted as original signatures; and (b) that this Agreement or any document created pursuant to this Agreement, may be maintained in an electronic document storage and retrieval system, a copy of which shall be considered an original. KMBS may accept orders electronically from Customer pursuant to this Agreement. Neither party shall raise any objection to the authenticity of this Agreement or any document created hereunder, based on either the use of a facsimile signature or the use of a copy retrieved from an electronic storage system.

**14. ENTIRE AGREEMENT**: The entire Agreement between Customer and KMBS on the subject matter, inclusive of RFP 10I-0930, any best and final offer, and the Member's purchase order, hereof and supersedes any proposal or prior agreement, oral or written, or any other communications relating to maintenance services for KMBS equipment and it may not be released, discharged, changed, or modified except by an instrument in writing signed by a duly authorized representative of each party. Customer agrees that any Purchase Order or other documentation issued to KMBS covering the equipment or maintenance is issued for purpose of authorization and Customer's internal use only, and any terms and conditions contained therein shall not modify or add to the terms and conditions of the Agreement. This Agreement will not be effective until accepted by an authorized representative of KMBS. Notice of acceptance is hereby waived by Customer. This does not include any stand-alone lease agreement entered into by the Members.

Gila County:

Gila County Manager

Don E. McDaniel, Gila County Manager

12/21/11
Date

KONICA MINOLTA:

Individual Authorized to Sign

Jay W. Douglas, Major Account Executive

12/19/2011
Date

Konica Minolta Business Solutions U.S.A., Inc.

KONICA MINOLTA

Mohave Educational Services Cooperative Contract 10i-KMBS-0127

# KMBS CPC Service & Maintenance Agreement

**Sold To: (legal name)**

Name: Gila County Account Number:

Address Line 1: Gila County Assessor's Office

Address Line 2: Dale Hom, County Assessor

Street Address: 1400 East Ash Street

City: Globe State: AZ Zip: 85501

**Ship To:**

Name: Gila County Account Number:

Address Line 1: Gila County Assessor's Office

Address Line 2: Hazel Dillon

Street Address: 1400 East Ash Street

City: Globe State: AZ Zip: 85501

**Tax Exemption** ☑ No ☐ Yes (Certificate required)

Tax Exemption Number:

**PO Required** ☐ No ☑ Yes (Copy required)

PO Number: PO Expiration Date:

## Advantage CPC Maintenance Plan

**Cost Per Copy**

☑ With Supplies ☐ Without Supplies - Purchased Separately

**Effective Date:** Installation (see letter)

**Billing for CPC contract:** ☐ Monthly ☐ Quarterly ☑ Annually

**Overages billed:** ☐ Monthly ☑ Quarterly ☐ Annually

**Contract Term (Months):** ☐ 12 ☐ 24 ☐ 36 ☐ 48 ☑ 60

**Product Covered Under Contract:**

| Item | Model Description | Serial Number | Type | Start Meter Read | Monthly Min Volume | CPC | Monthly Min $ | Overage CPC |
|---|---|---|---|---|---|---|---|---|
| 1 | Bizhub C-652 | | C | ZERO | ZERO | $ 0.02820 | ZERO | $ 0.02820 |
| | | | B/W | Zero | Unimited | | $ 84.22 | FLAT Rate |
| 2 | | | C | | | | | |
| | | | B/W | | | | Annual BASE | Includes Toner |
| 3 | | | C | | | | $1,010.65 | Includes Staples |
| | | | B/W | | | | | Unlimited B&W |
| 4 | | | C | | | | | Flat Rate |
| | | | B/W | | | | | |
| 5 | | | C | | | | | |
| | | | B/W | | | | | |
| 6 | | | C | | | | | |
| | | | B/W | | | | | |

Comments

*This agreement incorporates Schedule A-1 KMBS Modified Standard Maintenance Terms and Conditions for Mohave Educational Services Cooperative (MESC), a copy of which is available upon request. Not binding on KMBS until signed by KMBS Manager.*

Customer Name: Don E. McDaniel (Please Print)

Signature: (Authorized Representative of Customer) 12/21/11 (Date)

Title: County Manager

KMBS Representative: 12/19/11 (Date)

KMBS Manager: 12/19/11 (Date)

## FOR INTERNAL USE

☐ New Customer ☑ Maintenance w/ Equipment Order ☐ Maintenance Only ☐ Maintenance Billed by KMBS ☐ Maintenance Billed by Lease Company ☐ Dealer Serviced

PE #: 825104-R072711 Agreement #: 40038415 Customer Code 1:

Promotion #: Price Plan #: 10i-KMBS-0127 Customer Code 2:

Subfleet #: Customer Code 3:

| | | | | | |
|---|---|---|---|---|---|
| Key Operator Contact: | Hazel Dillon | Phone: | (928) 402- 8711 | Email Addr: | hdillon@co.gila.az.us |
| Meter Read Contact: | Hazel Dillon | Phone: | (928) 402- 8711 | Email Addr: | hdillon@co.gila.az.us |
| Accounts Payable Contact: | Silvia Martinez | Phone: | (928) 402-8626 | Email Addr: | smartinez@co.gila.az.us |

**Special Instructions:**

**Additional Documents Attached:**
☑ Price Exception ☐ Tax Exempt Certificate
☑ Purchase Order ☐ Credit Application

| | Sales Rep Number | Sales Rep Name (Please Print) | Sales Rep Email Address |
|---|---|---|---|
| Originating: | 9415280 | Jay W. Douglas | jdouglas@kmbs.konicaminolta.us |
| Order Taking: | 9415280 | Jay W. Douglas | jdouglas@kmbs.konicaminolta.us |
| Servicing: | 9415280 | Jay W. Douglas | jdouglas@kmbs.konicaminolta.us |

Contract Processed: ☑ Windsor, CT ☐ Branch (Branch Name)

KONICA MINOLTA

## SCHEDULE A - 1

## KMBS MODIFIED STANDARD MAINTENANCE TERMS AND CONDITIONS for MOHAVE EDUCATIONAL SERVICES COOPERATIVE (MESC)

**The following terms and conditions apply to the provision of maintenance services by Konica Minolta Business Solutions U.S.A., Inc. ("KMBS") to Customer during the term of this Agreement:**

1. **PAYMENT:** Payment is due within thirty (30) days from the date of the invoice. Should the customer fail to make any payment due hereunder, or be or become insolvent or be a party to of acquiesce in any bankruptcy or receivership proceeding or any similar action affecting the affairs or property of Customer, or violate any aspect of this Agreement, KMBS may (1) refuse to continue to service the equipment or provide Consumable Supplies and may enter Customer's premises to recover any property or equipment owned by KMBS or (2) furnish service on a time, travel and material basis, without prejudice to any other remedies KMBS may have. Reasonable costs, including counsel fees, shall be recoverable by KMBS in the event collection activities, including litigation, are required to collect outstanding amounts due under this Agreement. NO CASH PAYMENTS ACCEPTED. Accepted manners of payment are by major credit card or checks made payable to KMBS.

2. **METER READINGS:** Customer will provide accurate and timely meter readings at the end of each billing period in a manner prescribed by KMBS. KMBS charges for each copy or print, performed by the KMBS equipment included in this Agreement. A copy or print shall be defined as the generation of any document or image on the KMBS equipment. For purposes of this Agreement, all such uses of KMBS equipment shall be referenced herein as a "copy." KMBS shall have access to monitor the meter readings and if meter readings are not received in a timely manner, KMBS may obtain or estimate them and Customer agrees to pay for maintenance services based on estimated meter readings. Customer shall not alter or attempt to alter actual meter reading. Each "8 ½ x 11" copy will be recorded as a single meter click. Each 11" x 17" copy will be recorded as a double meter click. Duplexed copies shall be counted at twice the rate of simplexed copies For models equipped with banner printing capabilities, the following meter click charges shall apply: 18" to 27" = 3 clicks; 27" to 36" = 4 clicks; 36" to 47" - 5 clicks.

3. **SITE PREPARATION & ACCESS:** Customer shall ensure that equipment is paced in an environment that conforms with the manufacturer's specifications and requirements and will bear all cost and expense for any additional necessities required for installation such as telephone and electrical wiring, remodeling, and noise and power filters. Any electrical work external to the equipment (i.e. associated peripheral equipment, power, transmission and phone lines, and modems) and equipment line cord are not covered by this Agreement. Customer shall provide KMBS' personnel with free and full access to the equipment and any necessary operating time for the purposes of furnishing maintenance services. Customer shall arrange and insure that one of its employees is present at all times when KMBS personnel perform maintenance services. Relocation or make ready shipment of equipment is not covered by this maintenance Agreement This service, when requested, will be at the then billable rate of KMBS.

4. **COMMENCEMENT OF SERVICE:** The equipment must be in good condition on the commencement date of this Agreement. KMBS charges for parts and labor required to place the equipment in such condition unless covered under any applicable warranties or a continuous

KONICA MINOLTA

## SCHEDULE A - 1
## KMBS MODIFIED STANDARD MAINTENANCE TERMS AND CONDITIONS for MOHAVE EDUCATIONAL SERVICES COOPERATIVE (MESC)

maintenance Agreement. KMBS will invoice the customer and this will be in addition to the price set forth on the front hereof.

5. **ADDITIONAL EQUIPMENT:** No maintenance service for additional or substituted equipment will be provided by KMBS until it is accepted by KMBS, in writing, for coverage. KMBS reserves the right to adjust the coverage period for any additional or substituted equipment to assure common renewal dates.

6. **SERVICE INCLUDED:** KMBS' obligations under this Agreement is to provide Basic Maintenance Service on the equipment covered by this Agreement. Basic Maintenance Service is defined as that level of maintenance necessary to maintain the equipment in normal operating condition as set forth in the equipment specifications. Basic Maintenance Services includes labor and/or routine remedial and preventive maintenance service as well as remedial parts and Consumables Supplies, it this option is selected, as defined in section 24. All part replacements shall be on an exchange basis with new or refurbished items. Emergency service calls will be performed at no extra charge during normal business hours. Unless otherwise indicated, normal business hours are 8:30 a.m. to 5:00 pm., Monday through Friday, exclusive of holidays observed by KMBS. Overtime charges, at KMBS' then current rate, will be charged for all service calls outside normal business hours. In addition to any other rights hereunder, KMBS reserves the right to delete discontinued equipment from this Agreement if parts become unavailable for discontinued equipment.

7. **PREVENTIVE MAINTENANCE:** Preventive Maintenance shall be performed on the equipment at the intervals defined by the Technical Service Manuals for the particular model. Preventive Maintenance will include cleaning, lubrication, adjustment, and may be made at the same time remedial service is being performed. KMBS technicians do not carry or deliver consumable supplies (toner, developer, etc.). It is the Customer's responsibility to have the necessary supplies available for the Technician's use.

8. **vCARE MONITORING:** KMBS will deploy and enable its vCARE Solution, which is a Device Relationship Management (DRM) system that interacts with KMBS product(s) for the purpose of automated meter reading, technical performance monitoring, consumable and supply-level monitoring for replenishment, and product status (and as described in KMBS' Digital Needs Analysis).

9. **SELLER'S AGENTS:** Customer acknowledges that it has been advised that no agent, employee, or representative of KMBS has any authority to bind KMBS to any affirmation, promise, representation, or warranty concerning any of the equipment or services. Unless an affirmation, promise, representation, or warranty is specifically set forth in this Agreement it does not form a basis of this bargain and shall not be enforceable against KMBS.

10. **DISCLAIMER:** This Agreement does not cover service required due to malfunction of parts, attachments, or supplies of non-KMBS manufacture. When the use of a particular supply item may cause machine damage or require excessive servicing, KMBS, upon notice to Customer, will not

KONICA MINOLTA

## SCHEDULE A - 1

## KMBS MODIFIED STANDARD MAINTENANCE TERMS AND CONDITIONS for MOHAVE EDUCATIONAL SERVICES COOPERATIVE (MESC)

continue remedial or preventive service for that equipment. By introducing supplies of differing manufacture into the KMBS equipment Customer accepts the responsibility to pay for any remedial or corrective service required. Any alterations, modifications or changes to the equipment by someone other than KMBS, including Customer, may result in termination of this Agreement. Without prior authorization, this Agreement does not apply to any equipment which ceases to be at the customer location described on the front side hereof. This Agreement does not apply to any equipment lost or damaged through accident, abuse, misuse, theft, neglect, acts of third parties, fire, water, casualty or any other natural force, and any loss or damage occurring from any of the foregoing is specifically excluded from this Agreement. Customer warrants and represents that the equipment will be used for business purposes, and not for personal, family, or household purposes.

11. **AUTOMATIC RENEWAL:** Intentionally deleted.

12. **ESCALATION:** Intentionally deleted.

13. **EARLY TERMINATION CHARGE**: In the event Customer terminates prior to the expiration of the initial term of this Agreement without cause or in the event KMBS terminates this Agreement prior to the end of the initial term due to Customer's material breach, KMBS will bill and Customer will be responsible to pay an early termination charge as liquidated damages, and not as a penalty. Early termination charges will be calculated in the following manner: i) KMBS will average the three (3) most recent billing periods of KMBS maintenance to arrive at an average maintenance figure, then ii) multiply that figure by the number of remaining billing periods in the remaining unexpired term, and then iii) divide that number by two (2).

14. **NETWORK INTEGRATION:** If Network Integration services are provided by KMBS, Customer warrants that the KMBS Digital Needs Analysis ("DNA") has been accurately completed and KMBS may rely on the information contained in the DNA In providing network integration services. KMBS reserves the right to assess additional charges for service due to Customer's modification of its network, software, or operating system(s).

15. **ASSIGNMENT:** Customer may not assign this Agreement, without KMBS' express written consent. In the event that KMBS assigns or subcontracts any of its obligations under this Agreement, KMBS shall remain primarily responsible to perform those obligations. Any claim or defense Customer may have relating to those obligations must be asserted only against KMBS and not its assignee. KMBS may assign, without notice to Customer, any of its rights under this Agreement.

16. **NOTICES:** All notices required to be given under this Agreement shall be in writing and shall be sent by U.S. first class mail to the parties as follows: To Customer at the address listed on the front of this Agreement and to KMBS, at 100 Williams Drive, Ramsey, NJ 07446, Attention: Office of Direct Administration.

KONICA MINOLTA

## SCHEDULE A - 1

## KMBS MODIFIED STANDARD MAINTENANCE TERMS AND CONDITIONS for MOHAVE EDUCATIONAL SERVICES COOPERATIVE (MESC)

17. **INDEMNIFICATION:** Customer shall bear all risk of theft, loss or damage not caused by KMBS employees or agents, to all Equipment delivered and accepted under this Agreement. Customer agrees to indemnify, defend and hold harmless KMBS, its officers, directors, employees and agents from all loss, liability, claims or expenses (including reasonable attorney's fees) arising out of Customer's use of the equipment, including but not limited to liabilities arising from illegal use of KMBS equipment as well as bodily injury, including death, or property damage to any person, unless said injuries, death or property damage was caused solely as the result of a negligent or intentional act or omission by KMBS.

18. **WARRANTY:** KMBS WARRANTS THAT THE SERVICES SHALL BE PERFORMED IN ACCORDANCE WITH THE MANUFACTURER'S RECOMMENDATIONS AND SPECIFICATIONS FOR THE EQUIPMENT. KMBS MAKES NO OTHER WARRANTIES WHATSOEVER EXPRESS OR IMPLIED WITH REGARD TO THE SERVICE. THE SOFTWARE INCLUDED WITH THE EQUIPMENT OR ITS INSTALLATION, AND MAINTENANCE, AND EXPRESSLY EXCLUDES ALL IMPLIED WARRANTIES OF MERCHANTABILITY AND FITNESS FOR A PARTICULAR PURPOSE.

19. **REMEDY LIMITATIONS:** The equipment may not be returned to KMBS without KMBS' written consent. CUSTOMER'S EXCLUSIVE REMEDY FOR BREACH OF WARRANTY SHALL BE REPAIR OF THE EQUIPMENT OR REPLACEMENT OF A NONCONFORMING PART, AT THE OPTION OF KMBS. THE PARTIES WAIVE THEIR RESPECTIVE RIGHTS TO SPECIAL, CONSEQUENTIAL, EXEMPLARY, INCIDENTAL OR PUNITIVE DAMAGES FOR ANY PROVEN BREACH OF THIS AGREEMENT (INCLUDING WARRANTY). THE PARTIES RESERVE THE RIGHT TO RECOVER CONTRACT DAMAGES ALLOWED VIA THIS AGREEMENT. KMBS' LIABILITY UNDER THIS AGREEMENT IS LIMITED TO THE COVER DAMAGES ON THE COST OF ALTERNATE MAINTENANCE SERVICES AND/OR CONSUMABLES PURCHASED BY THE CUSTOMER. KMBS SHALL NOT BE LIABLE FOR ANY DAMAGES, INCLUDING BUT NOT LIMITED TO, DAMAGES DUE TO LOSS OF DATA OR INFORMATION OF ANY KIND. LOSS OF OR DAMAGE TO REVENUE, PROFITS OR GOODWILL, DAMAGES DUE TO ANY INTERRUPTION OF BUSINESS, DAMAGE TO CUSTOMER'S COMPUTERS OR NETWORKS, EVEN IF KMBS HAS BEEN ADVISED OF THE POSSIBILITY OF SUCH DAMAGES.

20. **APPLICABLE LAW:** This Agreement shall be governed by the laws of the State of Arizona without regard to choice of law principles. In the event of litigation or other proceedings by KMBS to enforce or defend any term or provision of this Agreement, Customer agrees to pay all roses and expenses sustained by KMBS, including but not limited to, reasonable attorney's fees. Customer further agrees to litigate any dispute concerning this matter in the courts of the state of Arizona, consents to jurisdiction in that forum.

21. **FORCE MAJEURE:** Neither party shall be responsible for delays or failure in performance of this Agreement (other than failure to make payment) to the extent that such party was hindered in its performance by any act of God, civil commotion, labor dispute, or any other occurrence beyond its reasonable control.

KONICA MINOLTA

## SCHEDULE A - 1

## KMBS MODIFIED STANDARD MAINTENANCE TERMS AND CONDITIONS for MOHAVE EDUCATIONAL SERVICES COOPERATIVE (MESC)

22. **WAIVER & SEVERABILITY:** Failure by KMBS to enforce any provisions of this Agreement or any rights hereunder, or failure to exercise any election provided for herein, Shari in no way he considered a waiver of such provisions, rights, or elections, or in any way affect the party's right to later enforce or exercise the same or other provisions, rights, or elections it may have under this Agreement. If any provision of this Agreement snail be unlawful, void or for any reason unenforceable, then that provision shall be deemed severable from this Agreement and shall not affect the validity and enforceability of the remaining provisions of this Agreement.

23. **ORIGINAL DOCUMENT:** Customer further agrees (a) that facsimile or electronic signatures shall be accepted as original signatures; and (b) that this Agreement or any document created pursuant to this Agreement, may be maintained in an electronic document storage and retrieval system, a copy of which shall be considered an original. KMBS may accept orders electronically from Customer pursuant to this Agreement. Neither party shall raise any objection to the authenticity of this Agreement or any document created hereunder, based on either the use of a facsimile signature or the use of a copy retrieved from an electronic storage system.

24. **SUPPLIES INCLUDED IN THE BASE/PRINT CHARGE:** If this option has been selected, KMBS (or designated servicer) will provide Customer with certain types and quantities of Consumable Supplies. Consumable Supplies are defined as the toner, developer, copy cartridges and PM kits necessary to ensure that the equipment operates within the equipment specifications throughout the term of this Agreement. Customer agrees that the Consumable Supplies are KMBS property until used by Customer. Customer will use Consumable Supplies only with the contracted equipment and run them to their cease-function point. Customer shall not remove the Consumable Supplies from the location designated as Customer's address on the first page of this Agreement. Customer shall not sell, resell or otherwise transfer any Consumable supplies to any other entity. Customer will return any unused Consumable Supplies to KMBS at the end of this Agreement. Customer shall use reasonable care to store and protect KMBS Consumable Supplies located at Customer's location for Customer's convenience. Customer bears risk of loss of KMBS unused Consumable Supplies in the event of theft, fire or other mishap. Should Customer's use of Consumable Supplies exceed the Manufacturer Recommended Yields for the applicable unit by more than 6% in any given month, or should KMBS, in its reasonable discretion, determine that Consumable Supplies are being abused in any fashion, Customer agrees that KMBS shall have the right to charge for any such excess or improper usage. The Manufacturer's Recommended Yields for the Consumable Supplies are set forth in http://kmbs.konicaminolta.us Audit Rights. During the term of this Agreement and during the Sixty (60) day period immediately following the Term, KMBS shall have the right, upon reasonable notice or in connection with a maintenance call, to audit Customer's usage of Consumable Supplies. The audit will be conducted by comparing the records generated by the equipment to the Manufacturer's Recommended Yields. If the audit reveals that Customer has exceeded the Manufacturer's Recommended Yield for the applicable unit, then Customer shall promptly pay to KMBS an amount for the excess Consumable Supplies usage, based on the then current rate for the applicable Consumable Supply. KMBS reserves the right to charge Customer for shipping and handling charges incurred by KMBS for the delivery of any excess Consumable Supplies delivered to Customer.

KONICA MINOLTA

## SCHEDULE A - 1

## KMBS MODIFIED STANDARD MAINTENANCE TERMS AND CONDITIONS for MOHAVE EDUCATIONAL SERVICES COOPERATIVE (MESC)

25. **ENTIRE AGREEMENT**: The entire Agreement between Customer and KMBS on the subject matter, inclusive of RFP 10I-0930, any best and final offer, and the Member's purchase order, hereof and supersedes any proposal or prior agreement, oral or written, or any other communications relating to maintenance services for KMBS equipment and it may not be released, discharged, changed, or modified except by an instrument in writing signed by a duly authorized representative of each party. Customer agrees that any Purchase Order or other documentation issued to KMBS covering the equipment or maintenance is issued for purpose of authorization and Customer's internal use only, and any terms and conditions contained therein shall not modify or add to the terms and conditions of the Agreement. This Agreement will not be effective until accepted by an authorized representative of KMBS. Notice of acceptance is hereby waived by Customer. This does not include any stand-alone lease agreement entered into by the Members.

26. **DIGITAL SUPPORT SERVICE (DSS):** It this option has been selected, DSS provides Customer access to KMBS Digital Solution Center (DSC) telephonically or by electronic access. DSS includes technical support on items specified on the DSS Supported Products List including Digital Multi-Function Devices, General Office Applications, Graphic and Design Applications and Desktop Operating Systems. Customer may access expert level support by telephone or electronically. DSC support is available during the hours of 8:00a.m. and 6:00 p.m., Eastern Time, Monday through Friday, excluding KMBS observed holidays. DSC hours are subject to change by KMBS. Customer system(s) must be in good working condition. DSS does not include parts or labor related to network / computer problems not directly involved in the printing or scanning network or fax workflow. Customer network changes, attachments or additions may require additional DSS charges. KMBS reserves the right to terminate DSS services in the event that any of Customer changes, alterations or attachments makes it impractical for KMBS to provide DSS. Customer is responsible for performing normal operator functions, system backups, virus scans, and network security functions on a regular basis. The monthly rate for DSS is $10 per serial number.

GILA COUNTY:
Gila County Manager

Don E. McDaniel, Gila County Manager

12/21/11
Date

KONICA MINOLTA:

Individual Authorized to Sign

Jay W. Douglas, Major Account Executive

12/19/2011
Date

KONICA MINOLTA

Mohave Educational Services Cooperative Contract 10i-KMBS-0127

## Master Purchase Agreement

Check Applicable Box ☑ Purchase ☐ Lease ☐ Other: _____

| INVOICE TO | Account # | SOLD TO | Account # | SHIP TO | Account # |
|---|---|---|---|---|---|
| Legal Name | Gila County Assessor Office | Legal Name | Gila County | Legal Name | Gila County |
| Attn Line 1 | Accounts Payable | Attn Line 1 | Gila County Assessor Office | Attn Line 1 | Gila County Assessor Office |
| Attn Line 2 | Sylvia Martinez | Attn Line 2 | Dale Hom / Gary Holloway | Attn Line 2 | Gary Holloway |
| Street Address | 1400 East Ash Street | Street Address | 201 West Frontier Street | Street Address | 201 West Frontier Street |
| City Globe | State AZ Zip 85501 | City Payson | State AZ Zip 85541 | City Payson | State AZ Zip 85541 |

Tax Exempt ☑ No ☐ Yes (Copy Required) Tax Exempt # _____

P.O. Required ☐ No ☑ Yes (Copy Required) P.O. # _____ P.O. Expiration Date _____

Payment Terms: Net 30

Credit Card: Card Type _____ Name on Card _____ Authorized Credit Card Amount: _____ (plus applicable taxes) Credit Card # _____ Expiration Date _____

Check: Amount _____ Check # _____

Requested Delivery Date: 12/29/2011

Maintenance Contract ☑ Accepted ☐ Declined

| QTY | MATERIAL # | MATERIAL DESCRIPTION | SERIAL NUMBER | PRICE EACH | EXTENDED |
|---|---|---|---|---|---|
| | | MESC Contract # 10i-KMBS-0127 | | | |
| 1 | A1UD011 | bizhub 423 | | $ 2,490.00 | $ 2,490.00 |
| 1 | A1V4W13 | PC-409 Large Capacity Cabinet (1 x 2,500) | | $ 343.00 | $ 343.00 |
| 1 | A0HRWY2 | FS-527 Floor Finisher | | $ 583.00 | $ 583.00 |
| 1 | 7640001106 | D5133NT Power Filter (120 volt, 15 Amps, 3 Ou | | $ 75.00 | $ 75.00 |
| 1 | A0W4WY1 | WT-506 Working table surface | | $ 28.00 | $ 28.00 |

| QTY | MATERIAL # | SUPPLY - MATERIAL DESCRIPTION | | PRICE EACH | EXTENDED |
|---|---|---|---|---|---|
| 1 | A202030 | Black Toner TN-414 | N/A | | |
| 1 | 14YK | SK-602 Staples | N/A | | |
| | | | N/A | | |
| | | | N/A | | |
| | | DELIVERY CHARGE | N/A | | |
| | | INSTALLATION CHARGE | N/A | | |

Additional Charges:

☐ Network _____ ☐ Removal _____ ☐ Other _____

Additional Charges _____

TOTAL $ 3,519.00

(TOTAL is exclusive of applicable taxes)

Pick-Up Requested Removal Date:

| QTY | MATERIAL # | MATERIAL DESCRIPTION | SERIAL NUMBER |
|---|---|---|---|
| | | | |

Comments

*This agreement incorporates Schedule A KMBS Modified Sales Terms and Conditions for Mohave Educational Services Cooperative (MESC), a copy of which is available upon request. payment by credit card is indicated above, Customer hereby grants KMBS the authority to charge the Customer's credit card in the amount indicated (plus applicable taxes). KMBS ssumes no responsibility to pick-up, return to any party, and/or resolve any financial obligations on any existing Customer equipment except as specifically stated in this Agreement separately executed form. Not binding on KMBS until signed by KMBS Manager.*

Customer Name Don E. McDaniel (Please Print)

Signature [signature] (Authorized Representative of Customer) 12/21/2011 (Date)

Title County Manager

KMBS Representative [signature] 12/19/11 (Date)

KMBS Manager [signature] 12/19/11 (Date)

## INTERNAL KMBS USE ONLY

### CONTACT INFORMATION

| Pre-Call / Confirmation Contact | Phone | E-Mail Address | |
|---|---|---|---|
| Gary Holloway | (928) 425-3132 x 7190 | gholloway@co.gila.az.us | |
| **Primary Delivery Contact** | **Phone** | **Alternate Delivery Contact** | **Phone** |
| Gary Holloway | (928) 425-3132 x 7190 | Cassandra Villegas | (928) 402-4355 |
| **Accounts Payable Contact** | **Phone** | **E-Mail Address** | |
| Sylvia Martinez | (928) 402-8626 | smartinez@co.gila.az.us | |
| **Meter Contact** | **Phone** | **E-Mail Address (Meters)** | **Fax Number (Meters)** |
| Gary Holloway | (928) 425-3132 x 7190 | gholloway@co.gila.az.us | |

| Sales Rep | Sales Rep # | Split % | Phone | Sales Rep Name (Please Print) |
|---|---|---|---|---|
| Originating / Lead | 9415280 | 50% | (602) 531-2910 | Jay W. Douglas |
| Order Taking / Selling | 9415280 | 25% | (602) 531-2910 | Jay W. Douglas |
| Servicing / Installing | | 25% | | Bryce Judd |
| Sales District # | 94109 | 100% | Split % Approval (unless over-ridden by Master Agreement): | |

### ADDITIONAL ORDER INFORMATION

**Customer Type**

☑ State Government ☐ Federal Government ☐ Key Account ☐ National ☐ Print for Pay ☐ OPS ☐ Other ☐ Commercial/Local (Branch)

**Deduction(s):**

☐ Lease Reimb/Rebate (ZLEA): _____ ☐ Service (ZSVC) _____ ☐ Shipping (ZADY) _____ ☐ Other (ZMOT) _____ Describe:

**Additional Documents & Attachments:**

☐ Buyout Quote/Letter
☐ Check (Copy)
☐ Credit Application
☐ Contingency Demo Acknowledgement
☑ DNA w/ vCare #: _____ If checked indicate #
☐ Equipment Removal Authorization
☐ Lease Document with Approval
☐ Lease Reimbursement/Rebate
☐ Price Exception
☑ Purchase Order
☐ Tax Exempt Certificate
☐ Other _____ Describe

**Delivery** ☐ **Pick-Up (See Pg 1)** ☐ **No Movement** ☐ **Dealer Install** ☐ **New Customer** ☐ → **CRM Row ID#** _____ -

**Object Type:** _____ **Date/Time Submitted to Admin:** _____ - _____

**Lease #:** **Date Document Sent to Lease Company:**

### AGREEMENT INFORMATION

| | | | | | |
|---|---|---|---|---|---|
| **PE #** | 0825104-R072711 | **Agreement** | 10i-KMBS-0127 | **Customer Code 1** | Mohave Educational Services Cooperative |
| **Promotion #** | | **Subfleet / Price Plan** | / | **Customer Code 2** | Master Agreement 40038415 |
| | | | | **Customer Code 3** | |

### COMMENTS & SPECIAL INSTRUCTIONS

### PRE-CALL / CONFIRMATION INFORMATION

SPOKE WITH: _____ DATE: _____ TIME: _____

☐ Confirmed Ship To Address ☐ Confirmed Delivery Contact ☐ Confirmed Alternate Contact ☐ Confirmed Telephone #

Delivery Entrance ☐ Yes ☐ No ☐ Front ☐ Back ☐ Side

Is Site Ready ☐ Yes ☐ No If No, When _____

Delivery Hours _____ AM to _____ PM ☐ Mon ☐ Tues ☐ Wed ☐ Thurs ☐ Fri

Loading Dock ☐ Yes ☐ No Elevator ☐ Yes ☐ No Equipment Pick-up required ☐ Yes ☐ No

Stairs ☐ Yes ☐ No If yes, how many Turns or Landings ☐ Yes ☐ No If yes, how many

Special requirements (i.e. certificate of insurance, security check, customer comments, etc)

If unable to reach the customer, list date/time attempted 1st call: 2nd call: 3rd call:

| | |
|---|---|
| **Intermediate Consignee** _____ | KIT # _____ |
| Order Package Edited By: _____ Date: _____ | Credit Approval: _____ Date: _____ |

| | | | |
|---|---|---|---|
| *SALES ORDER #* | *3rd Party Order #* | *PICK-UP ORDER #* | *SUPPLY ORDER #* |
| *DELIVERY DOC #* | *PO#* | *DELIVERY DOC #* | *DELIVERY DOC #* |

KONICA MINOLTA

# SCHEDULE A
# KMBS MODIFIED SALES TERMS AND CONDITIONS
# for MOHAVE EDUCATIONAL SERVICES COOPERATIVE (MESC)

**The following terms and conditions shall apply should the Customer elect to purchase equipment outright:**

1. **PAYMENT:** Payment is due within thirty (30) days from the date of the invoice. Should the customer fail to make any payment due hereunder, or be or become insolvent or be a party to or acquiesce in any bankruptcy or receivership proceeding or any similar action affecting the affairs or property of Customer, or violate any aspect of this Agreement, Konica Minolta Business Solutions U.S.A., Inc. ("KMBS") may refuse to provide warranty service for the equipment and may enter Customer's premises to recover any property or equipment owned by KMBS. Customer specifically grants its permission to KMBS to enter its property for this purpose. Title to equipment referenced on the reverse side of this Agreement shall pass to Customer upon delivery to Customer's location unless equipment is provided on a rental basis. Title to equipment provided on a rental basis shall remain with KMBS. Customer agrees to the filing of any liens, and/or UCC security Agreements (including UCC-1) to acknowledge the financial interest of KMBS in the equipment which is the subject of this Agreement until full payment is made. Reasonable costs, including counsel fees, shall be recoverable by KMBS in the event collection activities, including litigation, are required to collect outstanding amounts due under this Agreement. NO CASH PAYMENTS ACCEPTED. Accepted manners of payment are by major credit card or checks made payable to KMBS.

2. **SITE PREPARATION:** Customer shall ensure that equipment is placed in an environment that conforms with the manufacturer's specifications and requirements and will bear all cost and expense for any additional necessities required for installation such as telephone and electrical wiring, remodeling, and noise and power filters. Any electrical work external to the equipment (i.e. associated peripheral equipment, power, transmission and phone lines, and modems) and equipment line cord is not covered by this Agreement. Once the equipment is delivered, risk of loss lies with the Customer.

3. **WARRANTY:** ALL WARRANTIES, EXPRESS OR IMPLIED, INCLUDING ANY IMPLIED WARRANTIES OF MERCHANTABILITY OR FITNESS FOR PARTICULAR USE OR PURPOSE ARE HEREBY DISCLAIMED BY KMBS AND WAIVED BY CUSTOMER.

4. **LIMITATIONS ON RECOVERY:** The equipment may not be returned to KMBS without KMBS' written consent. CUSTOMER'S EXCLUSIVE REMEDY FOR BREACH OF WARRANTY SHALL BE REPAIR OF THE EQUIPMENT OR REPLACEMENT OF A NONCONFORMING PART, AT THE OPTION OF KMBS. THE PARTIES WAIVE THEIR RESPECTIVE RIGHTS TO SPECIAL, CONSEQUENTIAL, EXEMPLARY, INCIDENTAL OR PUNITIVE DAMAGES FOR ANY PROVEN BREACH OF THIS AGREEMENT (INCLUDING WARRANTY). KMBS SHALL ALSO NOT BE LIABLE FOR ANY DAMAGES, INCLUDING BUT NOT LIMITED TO, DAMAGES DUE TO LOSS OF DATA OR INFORMATION OF ANY KIND, LOSS OF OR DAMAGE TO REVENUE, PROFITS OR GOODWILL, DAMAGES DUE TO ANY INTERRUPTION OF BUSINESS, DAMAGE TO CUSTOMER'S COMPUTERS OR NETWORKS, EVEN IF KMBS HAS BEEN ADVISED OF THE POSSIBILITY OF SUCH DAMAGES.

KONICA MINOLTA

## SCHEDULE A
## KMBS MODIFIED SALES TERMS AND CONDITIONS
## for MOHAVE EDUCATIONAL SERVICES COOPERATIVE (MESC)

5. **APPLICABLE LAW:** This Agreement shall be governed by the laws of the State of Arizona without regard to choice of law principles. In the event of litigation or other proceedings by KMBS to enforce or defend any term or provision of this Agreement, Customer agrees to pay all costs and expenses sustained by KMBS, including but not limited to, reasonable attorney's fees. Customer further agrees to litigate any dispute concerning this matter in the courts of the state of Arizona consents to jurisdiction in that forum.

6. **FORCE MAJEURE:** Neither party shall be responsible for delays or failure in performance of this Agreement (other than failure to make payment) to the extent that such party was hindered in its performance by any act of God, civil commotion, labor dispute, or any other occurrence beyond its reasonable control.

7. **SEVERABILITY**: If any provision of this Agreement shall be unlawful, void or for any reason unenforceable, then that provision shall be deemed severable from this Agreement and shall not affect the validity and enforceability of the remaining provisions of this Agreement.

8. **WAIVER:** Failure by KMBS to enforce any provisions of this Agreement or any rights hereunder, or failure to exercise any election provided for herein, shall in no way be considered a waiver of such provisions, rights, or elections, or in any way affect KMBS' right to later enforce or exercise the same or other provisions, rights, or elections it may have under this Agreement.

9. **BUSINESS PURPOSE:** Customer warrants and represents that the equipment will be used for business purposes, and not for personal, family, household purposes or other uses deemed illegal or infringing on the copyrights of others.

10. **INDEMNIFICATION:** Customer shall bear all risk of theft, loss or damage to all equipment delivered under this Agreement, which is not caused by KMBS employees or agents. Customer agrees to indemnify, defend and hold harmless KMBS, its officers, directors, employees and agents from all loss, liability, claims or expenses (including reasonable attorney's fees) arising out of Customer's use of the equipment, including but not limited to liabilities arising from illegal use of KMBS equipment as well as bodily injury, including death, or property damage to any person, unless said injuries, death or property damage was caused solely as the result of a negligent or intentional act or omission by KMBS.

11. **ASSIGNMENT**: Customer may not assign this Agreement, without KMBS' express written consent. In the event that KMBS assigns or subcontracts any of its obligations under this Agreement, KMBS shall remain primarily responsible to perform those obligations. Any claim or defense Customer may have relating to those obligations must be asserted only against KMBS and not its assignee. KMBS may assign, without notice to Customer, any of its rights under this Agreement.

KONICA MINOLTA

## SCHEDULE A
## KMBS MODIFIED SALES TERMS AND CONDITIONS
## for MOHAVE EDUCATIONAL SERVICES COOPERATIVE (MESC)

12. **NOTICES:** All notices required to be given under this Agreement shall be in writing and shall be sent by U.S. first class mail to the parties as follows: To Customer at the address listed on the front of this Agreement and to KMBS, at 100 Williams Drive, Ramsey, NJ 07446, Attention: Office of Direct Administration.

13. **ORIGINAL DOCUMENT**: Customer further agrees (a) that facsimile or electronic signatures shall be accepted as original signatures; and (b) that this Agreement or any document created pursuant to this Agreement, may be maintained in an electronic document storage and retrieval system, a copy of which shall be considered an original. KMBS may accept orders electronically from Customer pursuant to this Agreement. Neither party shall raise any objection to the authenticity of this Agreement or any document created hereunder, based on either the use of a facsimile signature or the use of a copy retrieved from an electronic storage system.

**14. ENTIRE AGREEMENT**: The entire Agreement between Customer and KMBS on the subject matter, inclusive of RFP 10I-0930, any best and final offer, and the Member's purchase order, hereof and supersedes any proposal or prior agreement, oral or written, or any other communications relating to maintenance services for KMBS equipment and it may not be released, discharged, changed, or modified except by an instrument in writing signed by a duly authorized representative of each party. Customer agrees that any Purchase Order or other documentation issued to KMBS covering the equipment or maintenance is issued for purpose of authorization and Customer's internal use only, and any terms and conditions contained therein shall not modify or add to the terms and conditions of the Agreement. This Agreement will not be effective until accepted by an authorized representative of KMBS. Notice of acceptance is hereby waived by Customer. This does not include any stand-alone lease agreement entered into by the Members.

Gila County:

Gila County Manager

Don E. McDaniel, Gila County Manager

12/21/11
Date

KONICA MINOLTA:

Individual Authorized to Sign

Jay W. Douglas, Major Account Executive

12/19/11
Date

Konica Minolta Business Solutions U.S.A., Inc.

KONICA MINOLTA

Mohave Educational Services Cooperative Contract 10i-KMBS-0127

# KMBS CPC Service & Maintenance Agreement

**Sold To: (legal name)**

Name: Gila County Account Number:

Address Line 1: Assessor's Office (Payson)

Address Line 2: Accounts Payable

Street Address: 1400 East Ash Street

City: Globe State: AZ Zip: 85501

**Ship To:**

Name: Gila County Account Number:

Address Line 1: Assessor's Office (Payson)

Address Line 2: Gary Holloway 425-3231 (ext. 7190)

Street Address: 201 West Frontier Street

City: Payson State: AZ Zip: 85541

**Tax Exemption** ☑ No ☐ Yes (Certificate required)

Tax Exemption Number:

**PO Required** ☐ No ☑ Yes (Copy required)

PO Number: PO Expiration Date:

## Advantage CPC Maintenance Plan

**Cost Per Copy**

☑ With Supplies ☐ Without Supplies - Purchased Separately

**Effective Date:** Installation (See attached Letter)

**Billing for CPC contract:** ☐ Monthly ☐ Quarterly ☑ Annually

**Overages billed:** ☐ Monthly ☐ Quarterly ☐ Annually

**Contract Term (Months):** ☐ 12 ☐ 24 ☐ 36 ☐ 48 ☑ 60

**Product Covered Under Contract:**

| Item | Model Description | Serial Number | Type | Start Meter Read | Monthly Min Volume | CPC | Monthly Min $ | Overage CPC |
|---|---|---|---|---|---|---|---|---|
| 1 | Bizhub423 | | C | | | | | |
| | | | B/W | Zero | Unlimited | | $ 56.42 | Flat Rate |
| 2 | | | C | | | | | |
| | | | B/W | | | | | Includes Toner |
| 3 | | | C | | Annual BASE | | Annual BASE | Includes Staples |
| | | | B/W | | | | $677.04 | Unlimited |
| 4 | | | C | | | | | |
| | | | B/W | | | | | |
| 5 | | | C | | | | | |
| | | | B/W | | | | | |
| 6 | | | C | | | | | |
| | | | B/W | | | | | |

Comments

*This agreement incorporates Schedule A-1 KMBS Modified Standard Maintenance Terms and Conditions for Mohave Educational Services Cooperative (MESC), a copy of which is available upon request. Not binding on KMBS until signed by KMBS Manager.*

Customer Name: Don E. McDaniel (Please Print)

Signature: Don E. McDaniel 12/21/11 (Authorized Representative of Customer / Date)

Title: County Manager

KMBS Representative: Jay W. Douglas 12/19/11 (Date)

KMBS Manager: Michael E. Wards 12/19/11 (Date)

**FOR INTERNAL USE**

☐ New Customer ☑ Maintenance w/ Equipment Order ☐ Maintenance Only ☐ Maintenance Billed by KMBS ☐ Maintenance Billed by Lease Company ☐ Dealer Serviced

PE #: 825104-R072711 Agreement #: 40038415 Customer Code 1:

Promotion #: Price Plan #: 10i-KMBS-0127 Customer Code 2:

Subfleet #: Customer Code 3:

| | | | | | |
|---|---|---|---|---|---|
| Key Operator Contact: | Gary Holloway | Phone: | (928) 425-3231 7190 | Email Addr: | gholloway@co.gila.az.us |
| Meter Read Contact: | Gary Holloway | Phone: | (928) 425-3231 7190 | Email Addr: | gholloway@co.gila.az.us |
| Accounts Payable Contact: | Silvia Martinez | Phone: | (928) 402-8626 | Email Addr: | smartinez@co.gila.az.us |

**Special Instructions:**

**Additional Documents Attached:** ☑ Price Exception ☐ Tax Exempt Certificate ☑ Purchase Order ☐ Credit Application

| | Sales Rep Number | Sales Rep Name (Please Print) | Sales Rep Email Address |
|---|---|---|---|
| Originating: | 9415280 | Jay W. Douglas | jdouglas@kmbs.konicaminolta.us |
| Order Taking: | 9415280 | Jay W. Douglas | jdouglas@kmbs.konicaminolta.us |
| Servicing: | 9415280 | Jay W. Douglas | jdouglas@kmbs.konicaminolta.us |

Contract Processed: ☑ Windsor, CT ☐ Branch (Branch Name)

KONICA MINOLTA

# SCHEDULE A - 1

## KMBS MODIFIED STANDARD MAINTENANCE TERMS AND CONDITIONS for MOHAVE EDUCATIONAL SERVICES COOPERATIVE (MESC)

**The following terms and conditions apply to the provision of maintenance services by Konica Minolta Business Solutions U.S.A., Inc. ("KMBS") to Customer during the term of this Agreement:**

1. **PAYMENT:** Payment is due within thirty (30) days from the date of the invoice. Should the customer fail to make any payment due hereunder, or be or become insolvent or be a party to of acquiesce in any bankruptcy or receivership proceeding or any similar action affecting the affairs or property of Customer, or violate any aspect of this Agreement, KMBS may (1) refuse to continue to service the equipment or provide Consumable Supplies and may enter Customer's premises to recover any property or equipment owned by KMBS or (2) furnish service on a time, travel and material basis, without prejudice to any other remedies KMBS may have. Reasonable costs, including counsel fees, shall be recoverable by KMBS in the event collection activities, including litigation, are required to collect outstanding amounts due under this Agreement. NO CASH PAYMENTS ACCEPTED. Accepted manners of payment are by major credit card or checks made payable to KMBS.

2. **METER READINGS:** Customer will provide accurate and timely meter readings at the end of each billing period in a manner prescribed by KMBS. KMBS charges for each copy or print, performed by the KMBS equipment included in this Agreement. A copy or print shall be defined as the generation of any document or image on the KMBS equipment. For purposes of this Agreement, all such uses of KMBS equipment shall be referenced herein as a "copy." KMBS shall have access to monitor the meter readings and if meter readings are not received in a timely manner, KMBS may obtain or estimate them and Customer agrees to pay for maintenance services based on estimated meter readings. Customer shall not alter or attempt to alter actual meter reading. Each "8 ½ x 11" copy will be recorded as a single meter click. Each 11" x 17" copy will be recorded as a double meter click. Duplexed copies shall be counted at twice the rate of simplexed copies For models equipped with banner printing capabilities, the following meter click charges shall apply: 18" to 27" = 3 clicks; 27" to 36" = 4 clicks; 36" to 47" - 5 clicks.

3. **SITE PREPARATION & ACCESS:** Customer shall ensure that equipment is paced in an environment that conforms with the manufacturer's specifications and requirements and will bear all cost and expense for any additional necessities required for installation such as telephone and electrical wiring, remodeling, and noise and power filters. Any electrical work external to the equipment (i.e. associated peripheral equipment, power, transmission and phone lines, and modems) and equipment line cord are not covered by this Agreement. Customer shall provide KMBS' personnel with free and full access to the equipment and any necessary operating time for the purposes of furnishing maintenance services. Customer shall arrange and insure that one of its employees is present at all times when KMBS personnel perform maintenance services. Relocation or make ready shipment of equipment is not covered by this maintenance Agreement This service, when requested, will be at the then billable rate of KMBS.

4. **COMMENCEMENT OF SERVICE:** The equipment must be in good condition on the commencement date of this Agreement. KMBS charges for parts and labor required to place the equipment in such condition unless covered under any applicable warranties or a continuous

KONICA MINOLTA

## SCHEDULE A - 1
## KMBS MODIFIED STANDARD MAINTENANCE TERMS AND CONDITIONS for MOHAVE EDUCATIONAL SERVICES COOPERATIVE (MESC)

maintenance Agreement. KMBS will invoice the customer and this will be in addition to the price set forth on the front hereof.

5. **ADDITIONAL EQUIPMENT:** No maintenance service for additional or substituted equipment will be provided by KMBS until it is accepted by KMBS, in writing, for coverage. KMBS reserves the right to adjust the coverage period for any additional or substituted equipment to assure common renewal dates.

6. **SERVICE INCLUDED:** KMBS' obligations under this Agreement is to provide Basic Maintenance Service on the equipment covered by this Agreement. Basic Maintenance Service is defined as that level of maintenance necessary to maintain the equipment in normal operating condition as set forth in the equipment specifications. Basic Maintenance Services includes labor and/or routine remedial and preventive maintenance service as well as remedial parts and Consumables Supplies, it this option is selected, as defined in section 24. All part replacements shall be on an exchange basis with new or refurbished items. Emergency service calls will be performed at no extra charge during normal business hours. Unless otherwise indicated, normal business hours are 8:30 a.m. to 5:00 pm., Monday through Friday, exclusive of holidays observed by KMBS. Overtime charges, at KMBS' then current rate, will be charged for all service calls outside normal business hours. In addition to any other rights hereunder, KMBS reserves the right to delete discontinued equipment from this Agreement if parts become unavailable for discontinued equipment.

7. **PREVENTIVE MAINTENANCE:** Preventive Maintenance shall be performed on the equipment at the intervals defined by the Technical Service Manuals for the particular model. Preventive Maintenance will include cleaning, lubrication, adjustment, and may be made at the same time remedial service is being performed. KMBS technicians do not carry or deliver consumable supplies (toner, developer, etc.). It is the Customer's responsibility to have the necessary supplies available for the Technician's use.

8. **vCARE MONITORING:** KMBS will deploy and enable its vCARE Solution, which is a Device Relationship Management (DRM) system that interacts with KMBS product(s) for the purpose of automated meter reading, technical performance monitoring, consumable and supply-level monitoring for replenishment, and product status (and as described in KMBS' Digital Needs Analysis).

9. **SELLER'S AGENTS:** Customer acknowledges that it has been advised that no agent, employee, or representative of KMBS has any authority to bind KMBS to any affirmation, promise, representation, or warranty concerning any of the equipment or services. Unless an affirmation, promise, representation, or warranty is specifically set forth in this Agreement it does not form a basis of this bargain and shall not be enforceable against KMBS.

10. **DISCLAIMER:** This Agreement does not cover service required due to malfunction of parts, attachments, or supplies of non-KMBS manufacture. When the use of a particular supply item may cause machine damage or require excessive servicing, KMBS, upon notice to Customer, will not

KONICA MINOLTA

## SCHEDULE A - 1
## KMBS MODIFIED STANDARD MAINTENANCE TERMS AND CONDITIONS
## for MOHAVE EDUCATIONAL SERVICES COOPERATIVE (MESC)

continue remedial or preventive service for that equipment. By introducing supplies of differing manufacture into the KMBS equipment Customer accepts the responsibility to pay for any remedial or corrective service required. Any alterations, modifications or changes to the equipment by someone other than KMBS, including Customer, may result in termination of this Agreement. Without prior authorization, this Agreement does not apply to any equipment which ceases to be at the customer location described on the front side hereof. This Agreement does not apply to any equipment lost or damaged through accident, abuse, misuse, theft, neglect, acts of third parties, fire, water, casualty or any other natural force, and any loss or damage occurring from any of the foregoing is specifically excluded from this Agreement. Customer warrants and represents that the equipment will be used for business purposes, and not for personal, family, or household purposes.

11. **AUTOMATIC RENEWAL:** Intentionally deleted.

12. **ESCALATION:** Intentionally deleted.

13. **EARLY TERMINATION CHARGE**: In the event Customer terminates prior to the expiration of the initial term of this Agreement without cause or in the event KMBS terminates this Agreement prior to the end of the initial term due to Customer's material breach, KMBS will bill and Customer will be responsible to pay an early termination charge as liquidated damages, and not as a penalty. Early termination charges will be calculated in the following manner: i) KMBS will average the three (3) most recent billing periods of KMBS maintenance to arrive at an average maintenance figure, then ii) multiply that figure by the number of remaining billing periods in the remaining unexpired term, and then iii) divide that number by two (2).

14. **NETWORK INTEGRATION:** If Network Integration services are provided by KMBS, Customer warrants that the KMBS Digital Needs Analysis ("DNA") has been accurately completed and KMBS may rely on the information contained in the DNA In providing network integration services. KMBS reserves the right to assess additional charges for service due to Customer's modification of its network, software, or operating system(s).

15. **ASSIGNMENT:** Customer may not assign this Agreement, without KMBS' express written consent. In the event that KMBS assigns or subcontracts any of its obligations under this Agreement, KMBS shall remain primarily responsible to perform those obligations. Any claim or defense Customer may have relating to those obligations must be asserted only against KMBS and not its assignee. KMBS may assign, without notice to Customer, any of its rights under this Agreement.

16. **NOTICES:** All notices required to be given under this Agreement shall be in writing and shall be sent by U.S. first class mail to the parties as follows: To Customer at the address listed on the front of this Agreement and to KMBS, at 100 Williams Drive, Ramsey, NJ 07446, Attention: Office of Direct Administration.

KONICA MINOLTA

## SCHEDULE A - 1

## KMBS MODIFIED STANDARD MAINTENANCE TERMS AND CONDITIONS for MOHAVE EDUCATIONAL SERVICES COOPERATIVE (MESC)

17. **INDEMNIFICATION:** Customer shall bear all risk of theft, loss or damage not caused by KMBS employees or agents, to all Equipment delivered and accepted under this Agreement. Customer agrees to indemnify, defend and hold harmless KMBS, its officers, directors, employees and agents from all loss, liability, claims or expenses (including reasonable attorney's fees) arising out of Customer's use of the equipment, including but not limited to liabilities arising from illegal use of KMBS equipment as well as bodily injury, including death, or property damage to any person, unless said injuries, death or property damage was caused solely as the result of a negligent or intentional act or omission by KMBS.

18. **WARRANTY:** KMBS WARRANTS THAT THE SERVICES SHALL BE PERFORMED IN ACCORDANCE WITH THE MANUFACTURER'S RECOMMENDATIONS AND SPECIFICATIONS FOR THE EQUIPMENT. KMBS MAKES NO OTHER WARRANTIES WHATSOEVER EXPRESS OR IMPLIED WITH REGARD TO THE SERVICE. THE SOFTWARE INCLUDED WITH THE EQUIPMENT OR ITS INSTALLATION, AND MAINTENANCE, AND EXPRESSLY EXCLUDES ALL IMPLIED WARRANTIES OF MERCHANTABILITY AND FITNESS FOR A PARTICULAR PURPOSE.

19. **REMEDY LIMITATIONS:** The equipment may not be returned to KMBS without KMBS' written consent. CUSTOMER'S EXCLUSIVE REMEDY FOR BREACH OF WARRANTY SHALL BE REPAIR OF THE EQUIPMENT OR REPLACEMENT OF A NONCONFORMING PART, AT THE OPTION OF KMBS. THE PARTIES WAIVE THEIR RESPECTIVE RIGHTS TO SPECIAL, CONSEQUENTIAL, EXEMPLARY, INCIDENTAL OR PUNITIVE DAMAGES FOR ANY PROVEN BREACH OF THIS AGREEMENT (INCLUDING WARRANTY). THE PARTIES RESERVE THE RIGHT TO RECOVER CONTRACT DAMAGES ALLOWED VIA THIS AGREEMENT. KMBS' LIABILITY UNDER THIS AGREEMENT IS LIMITED TO THE COVER DAMAGES ON THE COST OF ALTERNATE MAINTENANCE SERVICES AND/OR CONSUMABLES PURCHASED BY THE CUSTOMER. KMBS SHALL NOT BE LIABLE FOR ANY DAMAGES, INCLUDING BUT NOT LIMITED TO, DAMAGES DUE TO LOSS OF DATA OR INFORMATION OF ANY KIND. LOSS OF OR DAMAGE TO REVENUE, PROFITS OR GOODWILL, DAMAGES DUE TO ANY INTERRUPTION OF BUSINESS, DAMAGE TO CUSTOMER'S COMPUTERS OR NETWORKS, EVEN IF KMBS HAS BEEN ADVISED OF THE POSSIBILITY OF SUCH DAMAGES.

20. **APPLICABLE LAW:** This Agreement shall be governed by the laws of the State of Arizona without regard to choice of law principles. In the event of litigation or other proceedings by KMBS to enforce or defend any term or provision of this Agreement, Customer agrees to pay all roses and expenses sustained by KMBS, including but not limited to, reasonable attorney's fees. Customer further agrees to litigate any dispute concerning this matter in the courts of the state of Arizona, consents to jurisdiction in that forum.

21. **FORCE MAJEURE:** Neither party shall be responsible for delays or failure in performance of this Agreement (other than failure to make payment) to the extent that such party was hindered in its performance by any act of God, civil commotion, labor dispute, or any other occurrence beyond its reasonable control.

KONICA MINOLTA

## SCHEDULE A - 1

## KMBS MODIFIED STANDARD MAINTENANCE TERMS AND CONDITIONS for MOHAVE EDUCATIONAL SERVICES COOPERATIVE (MESC)

22. **WAIVER & SEVERABILITY:** Failure by KMBS to enforce any provisions of this Agreement or any rights hereunder, or failure to exercise any election provided for herein, Shari in no way he considered a waiver of such provisions, rights, or elections, or in any way affect the party's right to later enforce or exercise the same or other provisions, rights, or elections it may have under this Agreement. If any provision of this Agreement snail be unlawful, void or for any reason unenforceable, then that provision shall be deemed severable from this Agreement and shall not affect the validity and enforceability of the remaining provisions of this Agreement.

23. **ORIGINAL DOCUMENT:** Customer further agrees (a) that facsimile or electronic signatures shall be accepted as original signatures; and (b) that this Agreement or any document created pursuant to this Agreement, may be maintained in an electronic document storage and retrieval system, a copy of which shall be considered an original. KMBS may accept orders electronically from Customer pursuant to this Agreement. Neither party shall raise any objection to the authenticity of this Agreement or any document created hereunder, based on either the use of a facsimile signature or the use of a copy retrieved from an electronic storage system.

24. **SUPPLIES INCLUDED IN THE BASE/PRINT CHARGE:** If this option has been selected, KMBS (or designated servicer) will provide Customer with certain types and quantities of Consumable Supplies. Consumable Supplies are defined as the toner, developer, copy cartridges and PM kits necessary to ensure that the equipment operates within the equipment specifications throughout the term of this Agreement. Customer agrees that the Consumable Supplies are KMBS property until used by Customer. Customer will use Consumable Supplies only with the contracted equipment and run them to their cease-function point. Customer shall not remove the Consumable Supplies from the location designated as Customer's address on the first page of this Agreement. Customer shall not sell, resell or otherwise transfer any Consumable supplies to any other entity. Customer will return any unused Consumable Supplies to KMBS at the end of this Agreement. Customer shall use reasonable care to store and protect KMBS Consumable Supplies located at Customer's location for Customer's convenience. Customer bears risk of loss of KMBS unused Consumable Supplies in the event of theft, fire or other mishap. Should Customer's use of Consumable Supplies exceed the Manufacturer Recommended Yields for the applicable unit by more than 6% in any given month, or should KMBS, in its reasonable discretion, determine that Consumable Supplies are being abused in any fashion, Customer agrees that KMBS shall have the right to charge for any such excess or improper usage. The Manufacturer's Recommended Yields for the Consumable Supplies are set forth in http://kmbs.konicaminolta.us Audit Rights. During the term of this Agreement and during the Sixty (60) day period immediately following the Term, KMBS shall have the right, upon reasonable notice or in connection with a maintenance call, to audit Customer's usage of Consumable Supplies. The audit will be conducted by comparing the records generated by the equipment to the Manufacturer's Recommended Yields. If the audit reveals that Customer has exceeded the Manufacturer's Recommended Yield for the applicable unit, then Customer shall promptly pay to KMBS an amount for the excess Consumable Supplies usage, based on the then current rate for the applicable Consumable Supply. KMBS reserves the right to charge Customer for shipping and handling charges incurred by KMBS for the delivery of any excess Consumable Supplies delivered to Customer.

KONICA MINOLTA

## SCHEDULE A - 1

## KMBS MODIFIED STANDARD MAINTENANCE TERMS AND CONDITIONS for MOHAVE EDUCATIONAL SERVICES COOPERATIVE (MESC)

25. **ENTIRE AGREEMENT**: The entire Agreement between Customer and KMBS on the subject matter, inclusive of RFP 10I-0930, any best and final offer, and the Member's purchase order, hereof and supersedes any proposal or prior agreement, oral or written, or any other communications relating to maintenance services for KMBS equipment and it may not be released, discharged, changed, or modified except by an instrument in writing signed by a duly authorized representative of each party. Customer agrees that any Purchase Order or other documentation issued to KMBS covering the equipment or maintenance is issued for purpose of authorization and Customer's internal use only, and any terms and conditions contained therein shall not modify or add to the terms and conditions of the Agreement. This Agreement will not be effective until accepted by an authorized representative of KMBS. Notice of acceptance is hereby waived by Customer. This does not include any stand-alone lease agreement entered into by the Members.

26. **DIGITAL SUPPORT SERVICE (DSS):** It this option has been selected, DSS provides Customer access to KMBS Digital Solution Center (DSC) telephonically or by electronic access. DSS includes technical support on items specified on the DSS Supported Products List including Digital Multi-Function Devices, General Office Applications, Graphic and Design Applications and Desktop Operating Systems. Customer may access expert level support by telephone or electronically. DSC support is available during the hours of 8:00a.m. and 6:00 p.m., Eastern Time, Monday through Friday, excluding KMBS observed holidays. DSC hours are subject to change by KMBS. Customer system(s) must be in good working condition. DSS does not include parts or labor related to network / computer problems not directly involved in the printing or scanning network or fax workflow. Customer network changes, attachments or additions may require additional DSS charges. KMBS reserves the right to terminate DSS services in the event that any of Customer changes, alterations or attachments makes it impractical for KMBS to provide DSS. Customer is responsible for performing normal operator functions, system backups, virus scans, and network security functions on a regular basis. The monthly rate for DSS is $10 per serial number.

GILA COUNTY:
Gila County Manager

Don E. McDaniel, Gila County Manager

12/21/11
Date

KONICA MINOLTA:

Jay W. Douglas
Individual Authorized to Sign

Jay W. Douglas, Major Account Executive

12/19/11
Date

## *COUNTY MANAGER APPROVED CONTRACTS UNDER $50,000*

### *December 10, 2011, to December 16, 2011*

| Number | Title | Amount | Term | Approved | Renewal Option | Summary |
|---|---|---|---|---|---|---|
| 120111 | Sliding Glass Window Installation (Glass Masters Inc.) | $ 1,825.00 | 12-7-11 to 12-31-11 | 12-14-11 | Expires | Installation of sliding glass window at reception entrance of Public Works Administration Building |
| 111811 | Weatherization Project HH7632 (Noble Building LLC) | $8,623.71 | 12-24-11 to 2-15-12 | 12-14-11 | Expires | Construction, labor and material for community services weatherization project 7632 |
| 111911 | Weatherization Project HH7002 (Noble Building LLC) | $ 3,096.46 | 12-14-11 to 2-15-12 | 12-14-11 | Expires | Construction, labor and material for community services weatherization project 7002 |
| 112011 | Weatherization Project HH8091 (Noble Building LLC) | $ 11,122.14 | 12-14-11 to 2-15-12 | 12-14-11 | Expires | Construction, labor and material for community services weatherization project 8091 |
| 112111 | Weatherization Project HH8409 (Mountain Retreat Builders) | $ 10,072.24 | 12-14-11 to 3-31-12 | 12-14-11 | Expires | Construction, labor and material for community services weatherization project 8409 |

### *December 17, 2011, to December 23, 2011*

| Number | Title | Amount | Term | Approved | Renewal Option | Summary |
|---|---|---|---|---|---|---|
| 120811 | Abandoned Well Decommission (Excel Pump and Well Service) | $ 2,369.10 | 12-21-11 to 1-20-12 | 12-21-11 | Expires | Decommissioning of a 40 foot abandoned well in Tonto Basin as part of Emergency Management project. |
| 121011 | Weatherization Project HH8326 (Green Tree Construction) | $ 11,145.63 | 12-21-11 to 3-31-12 | 12-21-11 | Expires | Construction, labor and material for community services weatherization project 8326. |
| 121311 | Weatherization Project HH2865, 3124, 7365 (Rodriguez Construction) | $ 24,282.22 | 12-21-11 to 4-21-12 | 12-21-11 | Expires | Construction, labor and material for community services weatherization projects 2865, 3124, and 7365. |
| 121411 | Weatherization Project HH8336, 4295 (Rodriguez Construction) | $ 22,276.23 | 12-21-11 to 4-21-12 | 12-21-11 | Expires | Construction, labor and material for community services weatherization projects 8336 and 4295. |

| | | | | | | |
|---|---|---|---|---|---|---|
| 10i-KMBS-0127 | Konica Minolta Copier Purchase for Assessor's Office | $ 10,262.00 | 12-21-11 | 12-21-11 | Expires | Purchase of a black/white copier for Payson Office and color copier for Globe Office |
| | | | | | | |